REV	DESCRIPTION	DRAWN	DATE
		APPROVED	DATE

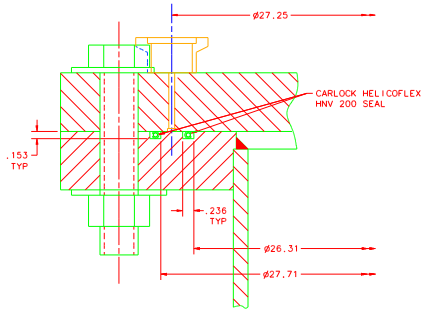

DETAIL D
SCALE: FULL

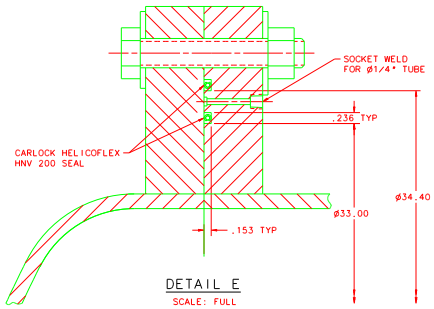

DETAIL E
SCALE: FULL

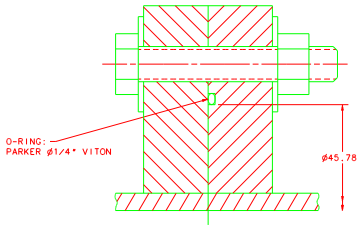

DETAIL F
SCALE: FULL

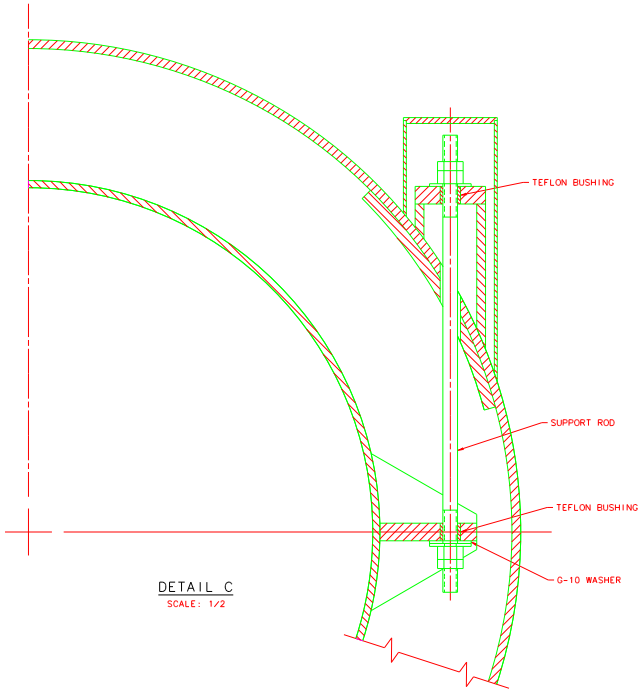

DETAIL C
SCALE: 1/2

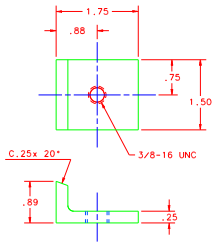

SUPPORT LUGS
SCALE: FULL

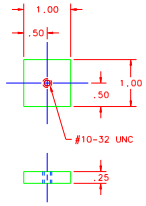

THERMOMETER MOUNT
SCALE: FULL

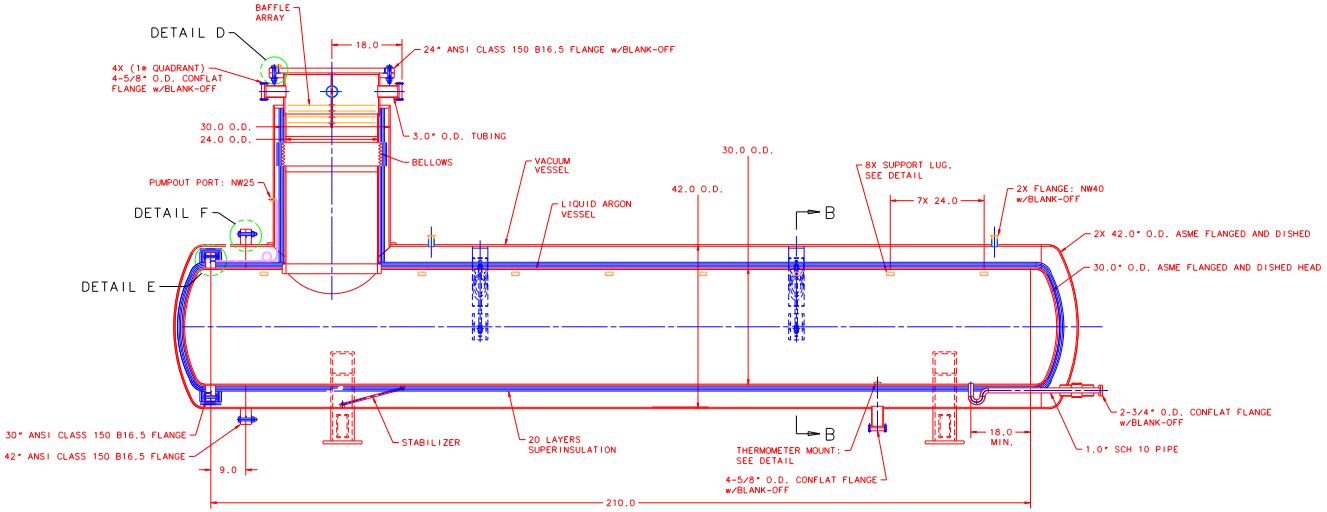

SECTION A-A

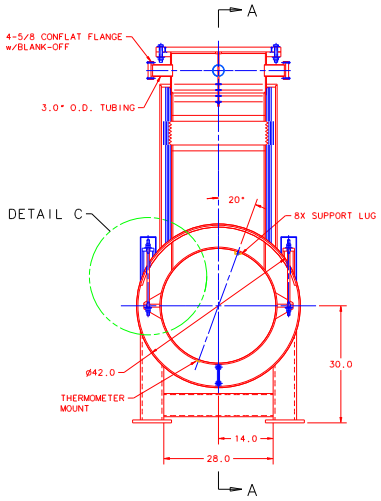

SECTION B-B

NOTES:

1. THIS VESSEL IS FURTHER SPECIFIED IN DOCUMENT, "FLARE 5 METER DRIFT CRYOSTAT."
2. DIMENSIONS NOT SHOWN ARE NOT CRITICAL TO VESSEL DESIGN.
3. SUPPORTS & STABILIZERS MAY USE OTHER DESIGNS.
4. MAXIMUM LOAD ON SUPPORT LUGS: 200 LBS. EACH.

UNLESS OTHERWISE SPECIFIED				ORIGINATOR	L.KULA	26-AUG-2005
.X	.XX	.XXX	ANGLES	DRAWN	W.CYRO	26-AUG-2005
± .1	± .06	± .03	± 1°	CHECKED		
1. BREAK ALL SHARP EDGES .1 MAX.				APPROVED		
2. DO NOT SCALE DRAWING.				USED ON		
3. DIMENSIONS BASED UPON ASME Y14.5M-1994						
4. MAX. ALL MACH. SURFACES 125				MATERIAL		
5. DRAWING UNITS: U.S. INCH						

FERMI NATIONAL ACCELERATOR LABORATORY
UNITED STATES DEPARTMENT OF ENERGY

FLARE-MECHANICAL
CRYOGENIC
LIQUID ARGON DEWAR ASSEMBLY

SCALE	DRAWING NUMBER	SHEET	REV
1"=1'-0"	3942.320-ME-435406	1 OF 1	

CREATED WITH : IdeasTINXSeries | GROUP: PPD/MECHANICAL DEPARTMENT