REV	DESCRIPTION	DRAWN / APPROVED	DATE / DATE
A	ADDED CHIMNEY HEIGHT (66.2) AND CHIMNEY LOCATION (31.0)	B. CYKO	09-14-05
		C. GROZIS	09-14-05
B	1. REMOVED SUPPORTS CLOSEST TO CHIMNEY. 2. REMOVED CHIMNEY BELLOWS. 3. REMOVED STABILIZER BETWEEN LOWER INNER TANK AND VACUUM VESSEL.	B. CYKO	10-18-05
		C. GROZIS	10-18-05

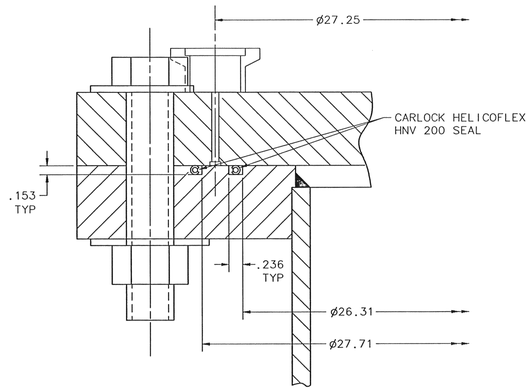

DETAIL D
SCALE: FULL

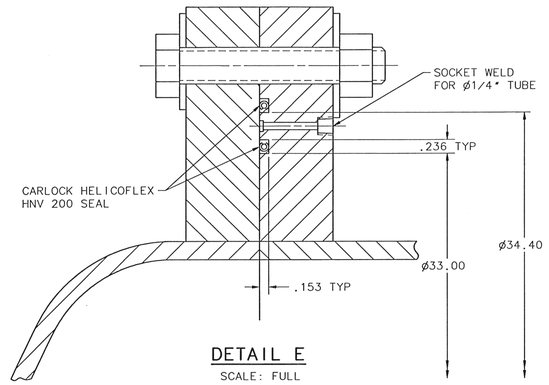

DETAIL E
SCALE: FULL

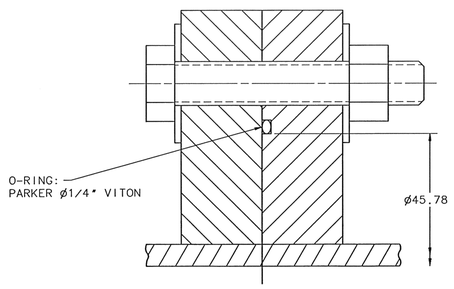

DETAIL F
SCALE: FULL

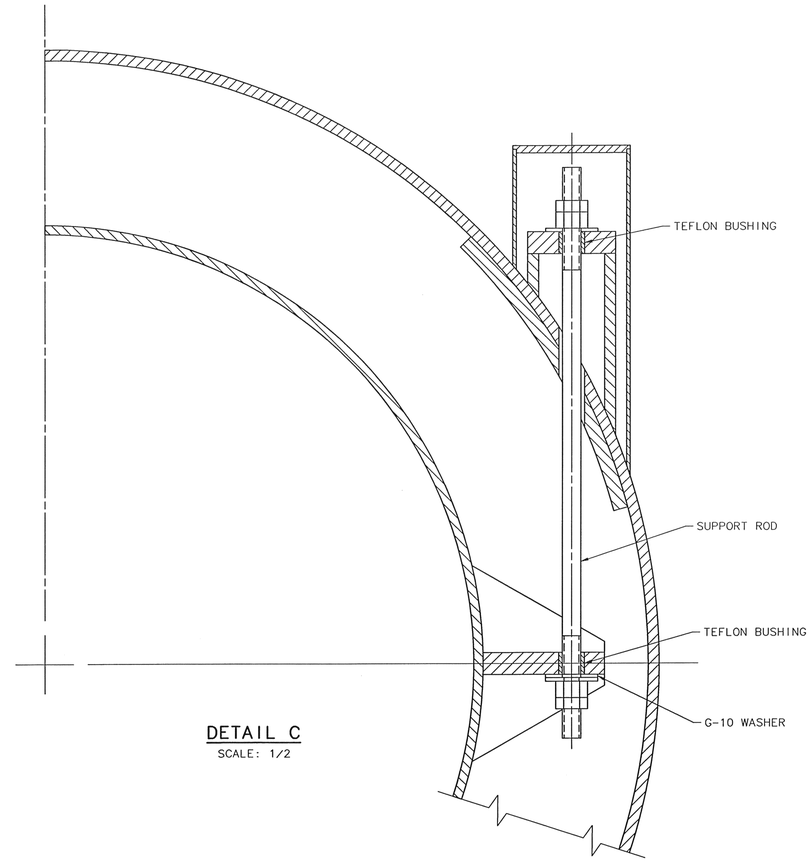

DETAIL C
SCALE: 1/2

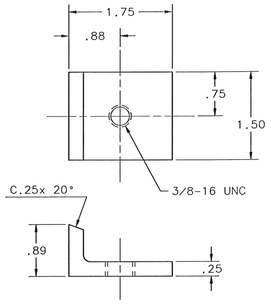

SUPPORT LUGS
SCALE: FULL

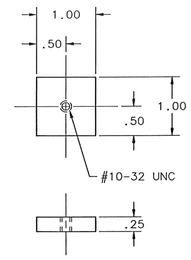

THERMOMETER MOUNT
SCALE: FULL

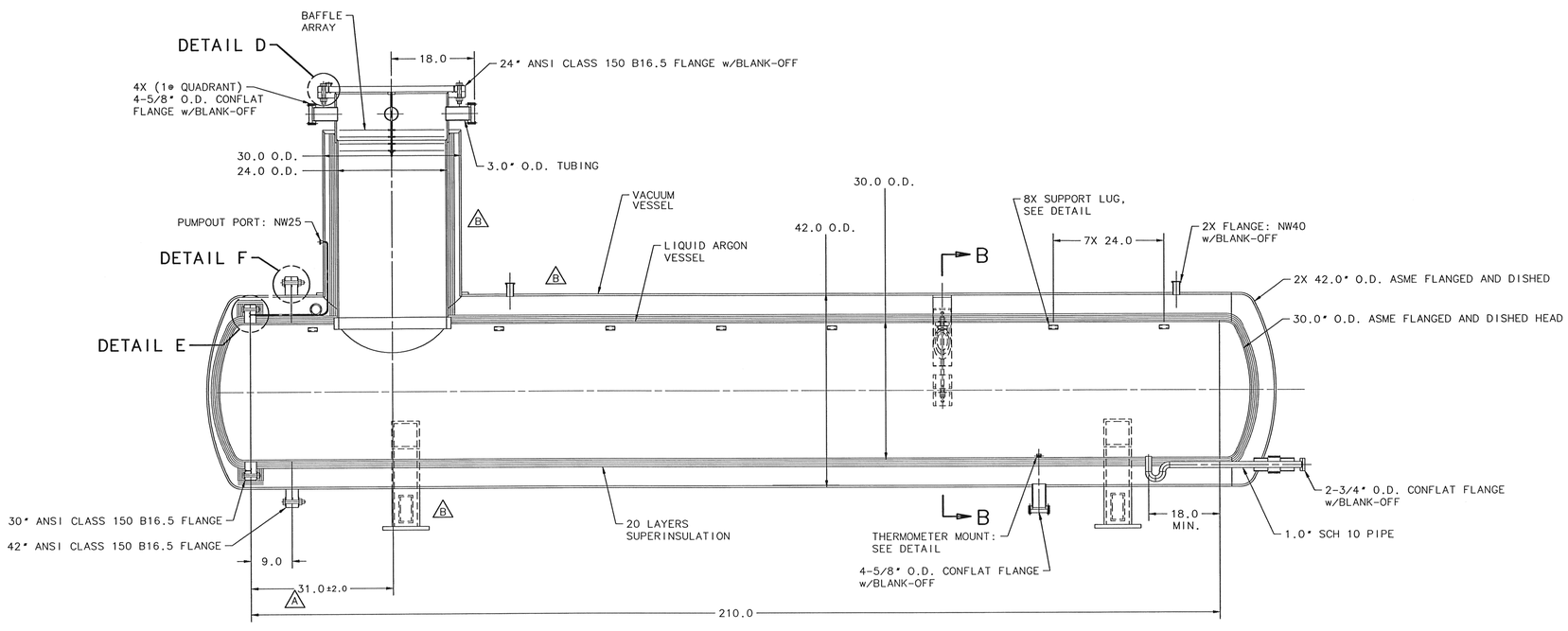

SECTION A-A

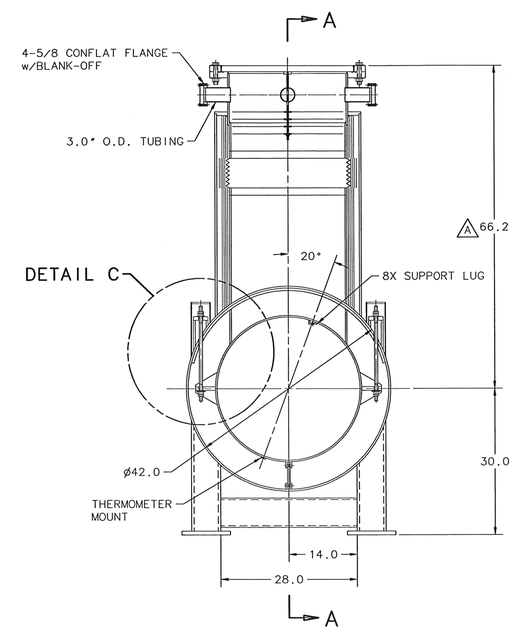

SECTION B-B

NOTES:

1. THIS VESSEL IS FURTHER SPECIFIED IN DOCUMENT, "FLARE 5 METER DRIFT CRYOSTAT."
2. DIMENSIONS NOT SHOWN ARE NOT CRITICAL TO VESSEL DESIGN.
3. SUPPORTS & STABILIZERS MAY USE OTHER DESIGNS.
4. MAXIMUM LOAD ON SUPPORT LUGS: 200 LBS. EACH.

UNLESS OTHERWISE SPECIFIED			ORIGINATOR	L.KULA	26-AUG-2005
.X	.XX	ANGLES	DRAWN	W.CYKO	26-AUG-2005
± .1	± .06	± 1°	CHECKED	R.SCHMITT	14-SEP-2005
1. BREAK ALL SHARP EDGES .06 MAX. 2. DO NOT SCALE DRAWING. 3. DIMENSIONS BASED UPON ASME Y14.5M-1994 4. MAX. ALL MACH. SURFACES 125 5. DRAWING UNITS: U.S. INCH			APPROVED	R.SCHMITT	14-SEP-2005
			USED ON		
			MATERIAL		

FERMI NATIONAL ACCELERATOR LABORATORY
UNITED STATES DEPARTMENT OF ENERGY

FLARE-MECHANICAL CRYOGENIC LIQUID ARGON DEWAR ASSEMBLY

SCALE	DRAWING NUMBER	SHEET	REV
1"=1'-0"	3942.320-ME-435406	1 OF 1	B

CREATED WITH: Ideas11NXSeries GROUP: PPD/MECHANICAL DEPARTMENT