REV	DESCRIPTION	DRAWN	DATE
		APPROVED	DATE

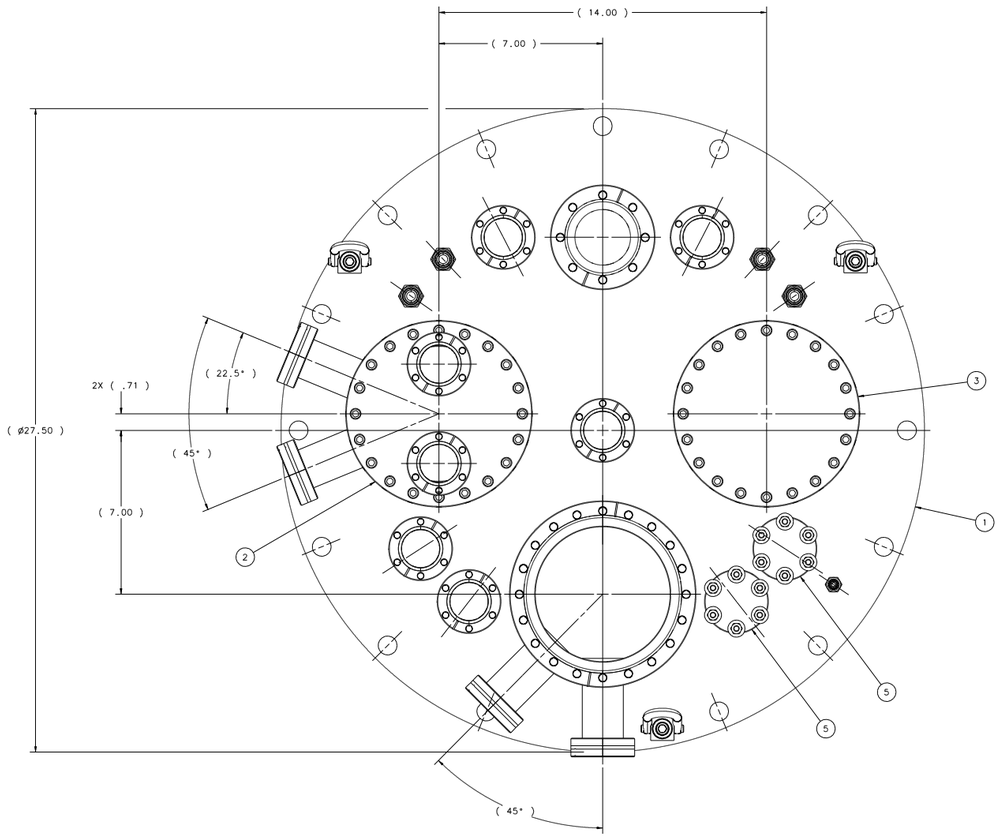

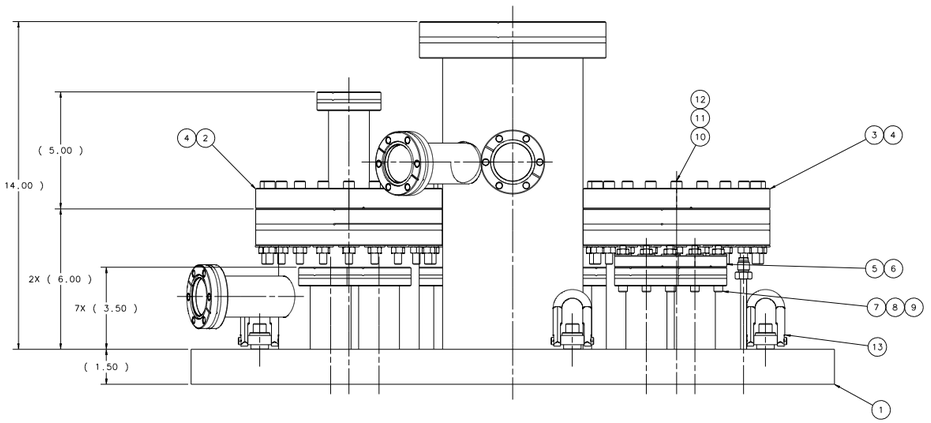

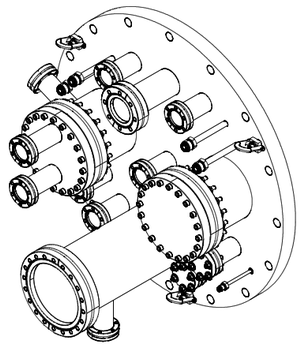

ISOMETRIC VIEW
SCALE= 1:4

ITEM	PART NO.	DESCRIPTION OR SIZE	QTY.
13	3052T56	HOIST RING;3/8-16 THREAD;1000#; MACHINED ALLOY STEEL;McMASTER-CARR	3
12	92141A030	FLAT WASHER;5/16 SCREW; 18-8 STAINLESS STEEL;McMASTER-CARR	40
11	91841A225	HEX HEAD NUT;5/16-24 UNF; 18-8 STAINLESS STEEL;McMASTER-CARR	40
10	92196A351	SOCKET HEAD CAP SCREW;5/16-24 UNF X 3-1/2 LG.; 18-8 STAINLESS STEEL;McMASTER-CARR	40
9	92141A029	FLAT WASHER;1/4 SCREW; 18-8 STAINLESS STEEL;McMASTER-CARR	12
8	91841A215	HEX HEAD NUT;1/4-28 UNF; 18-8 STAINLESS STEEL;McMASTER-CARR	12
7	92196A330	SOCKET HEAD CAP SCREW;1/4-28 UNF X 1-3/4 LG.; 18-8 STAINLESS STEEL;McMASTER-CARR	12
6	191004	COPPER GASKET;2-3/4 FLANGE;GK-150; MDC VACUUM PRODUCTS	2
5	110008	DELSEAL NON-ROTATABLE 2-3/4 O.D. BLANK FLANGE; THRU HOLES;304 STN. STL.;MDC VACUUM PRODUCTS	2
4	191017	COPPER GASKET;8 FLANGE;GK-600; MDC VACUUM PRODUCTS	2
3	110030	DELSEAL NON-ROTATABLE 8 O.D. BLANK FLANGE; THRU HOLES;304 STN. STL.;MDC VACUUM PRODUCTS	1
2	MD-435487	8" MONITOR FLANGE WELDMENT	1
1	ME-435483	DEWAR TOP PLATE WELDMENT	1

PARTS LIST

UNLESS OTHERWISE SPECIFIED			ORIGINATOR	T.TOPE	05-OCT-2005
.XX	.XXX	ANGLES	DRAWN	B.ELLISON	05-OCT-2005
± .05	± ...	± ..	CHECKED	D.FRIEND	18-NOV-2005
			APPROVED	T.TOPE	18-NOV-2005

1. BREAK ALL SHARP EDGES .015 MAX
2. DO NOT SCALE DRAWING.
3. DIMENSIONS BASED UPON ASME Y14.5M-1994
4. MAX. ALL MACH. SURFACES 125 √
5. DRAWING UNITS: U.S. INCH

USED ON

MATERIAL
SEE PARTS LIST ABOVE

FERMI NATIONAL ACCELERATOR LABORATORY
UNITED STATES DEPARTMENT OF ENERGY

FLARE-MECHANICAL CRYOGENIC TOP PLATE ASSEMBLY

SCALE	DRAWING NUMBER	SHEET	REV
1:2 & AS NOTED	3942.320-ME-435488	1 OF 1	

CREATED WITH : Ideas11NXSeries | GROUP: PPD/MECHANICAL DEPARTMENT

REV	DESCRIPTION	DRAWN	DATE
		APPROVED	DATE

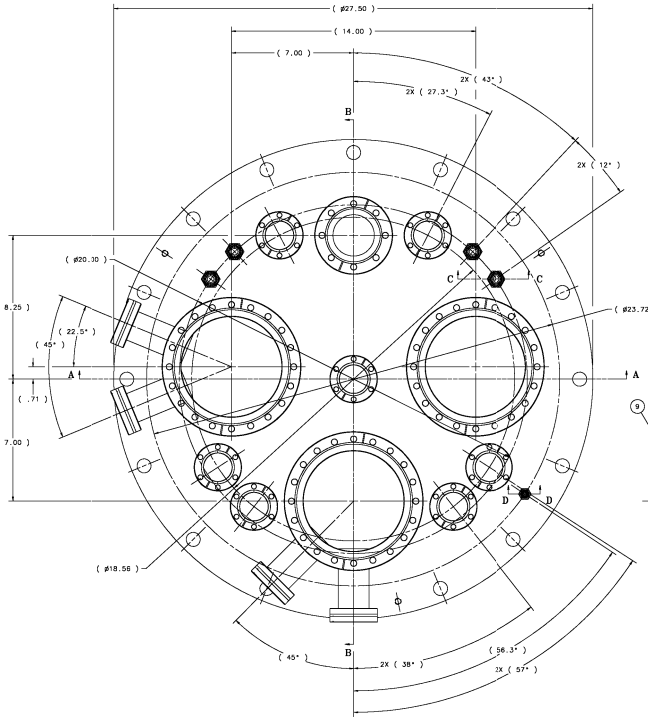

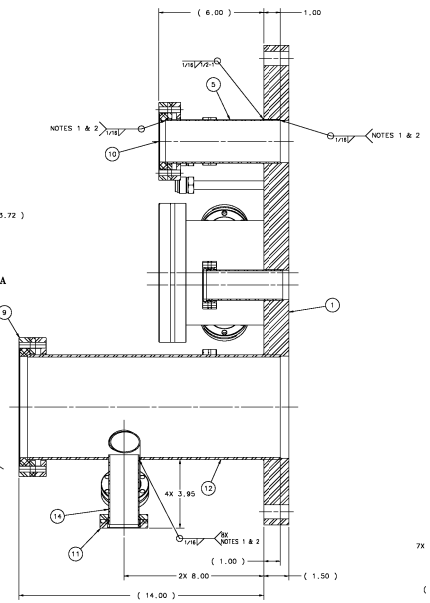

SECTION B-B

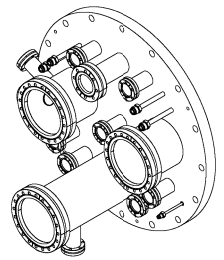

ISOMETRIC VIEW
SCALE= 1:4

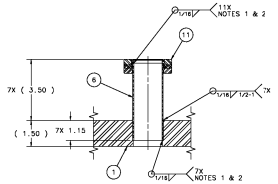

DETAIL E

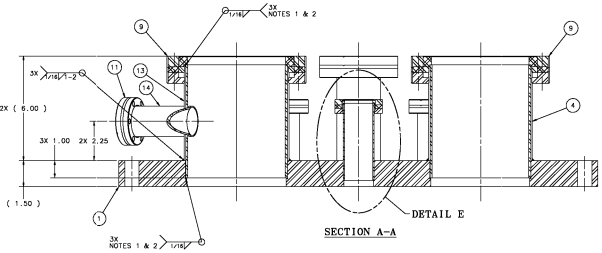

SECTION A-A

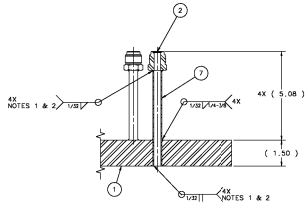

SECTION C-C

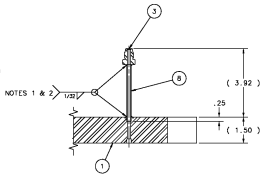

SECTION D-D

NOTES: 1) ALL WELDS TO BE VACUUM LEAK TIGHT.
2) LEAK TEST: NO LEAK SHALL BE DETECTABLE ON THE MOST SENSITIVE SCALE OF A HELIUM LEAK DETECTOR WITH A MINIMUM SENSITIVITY OF 10-9 ATM.CC/SEC.

ITEM	PART NO.	DESCRIPTION OR SIZE	QTY.
14	COM'L.	TUBE,1-3/4 O.D. X .065 WALL X 4.00 LG.; 304 STAINLESS STEEL	4
13	MC-435524	6 O.D. TUBE X 8.50 LG. W/HOLES	1
12	MC-435523	6 O.D. TUBE X 14.50 LG. W/HOLES	1
11	106043	RELEGAL RETAINER,FLANGE-1-3/4 O.D. X 1.781 I.D. THRU HOLES;304 STN. STL.;MDC VACUUM PRODUCTS	11
10	106021	RELEGAL RETAINER,FLANGE-1-1/2 O.D. X 1.510 I.D. THRU HOLES;304 STN. STL.;MDC VACUUM PRODUCTS	1
9	106031	RELEGAL RETAINER,FLANGE-2.5 O.D. X 2.322 I.D.; THRU HOLES;304 STN. STL.;MDC VACUUM PRODUCTS	3
8	COM'L.	TUBE,3-1/4 O.D. X .109 WALL X 3.25 LG.; 304 STAINLESS STEEL	1
7	COM'L.	TUBE,1-1/2 O.D. X .065 WALL X 5.50 LG.; 304 STAINLESS STEEL	4
6	COM'L.	TUBE,1-3/4 O.D. X .065 WALL X 4.44 LG.; 304 STAINLESS STEEL	7
5	COM'L.	TUBE,2-1/2 O.D. X .065 WALL X 8.63 LG.; 304 STAINLESS STEEL	1
4	COM'L.	TUBE,8 O.D. X .120 WALL X 8.50 LG.; 304 STAINLESS STEEL	1
3	MB-435485	MODIFIED 1/4" MALE PLUG	1
2	MB-435484	MODIFIED 1/2" MALE PLUG	4
1	ME-435481	DEWAR TOP PLATE	1

PARTS LIST

UNLESS OTHERWISE SPECIFIED			ORIGINATOR	T.TOPC	04-OCT-2005
.XX	.XXX	ANGLES	DRAWN	B.ELLISON	04-OCT-2005
± .03	± .010	± 1°	CHECKED	D.FRIEND	18-NOV-2005
1. BREAK ALL SHARP EDGES TO .010 R MAX.			APPROVED	T.TOPC	18-NOV-2005
2. DO NOT SCALE DRAWING. 3. REMOVE ALL BURRS AND FOREIGN MATERIAL. 4. MAT. ALL MACH. SURFACES 125			USED ON	ME-435488	
5. DRAWING UNITS:U.S.INCH			MATERIAL	SEE PARTS LIST ABOVE	

FERMI NATIONAL ACCELERATOR LABORATORY
UNITED STATES DEPARTMENT OF ENERGY

FLARE-MECHANICAL
CRYOGENIC
DEWAR TOP PLATE WELDMENT

SCALE	DRAWING NUMBER	SHEET	REV
1/2.8 AS NOTED	3942.320-ME-435483	1 OF 1	

CREATED WITH: ; dwwattrNSerias GROUP: PPD/MECHANICAL DEPARTMENT

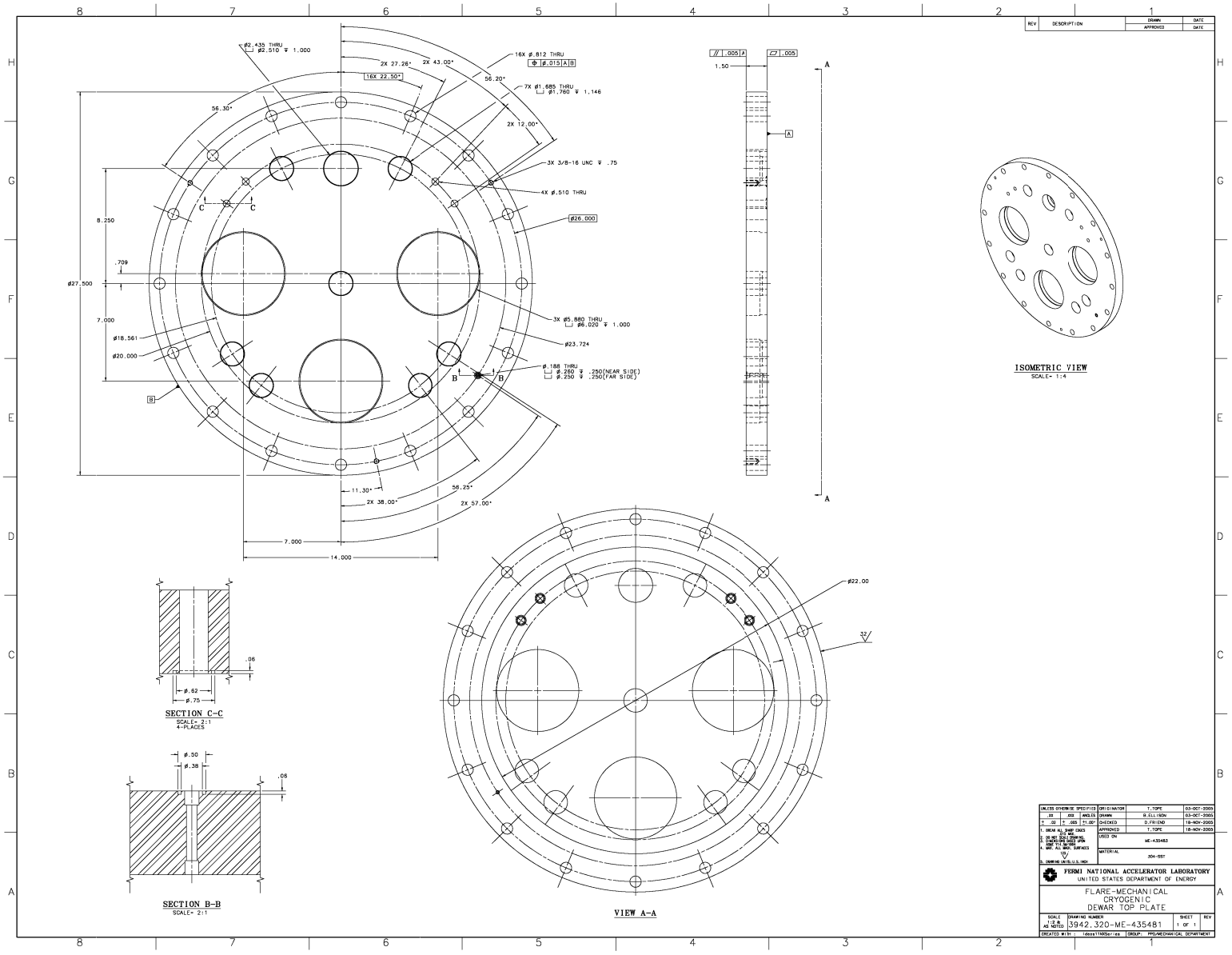

REV
DESCRIPTION
DRAWN
DATE
APPROVED
DATE
ø2.435 THRU
ø2.510 ⊽ 1.000
2X 27.26°
2X 43.00°
16X ø.812 THRU
ø.015 A B
16X 22.50°
56.20°
7X ø1.685 THRU
ø1.760 ⊽ 1.146
56.30°
2X 12.00°
3X 3/8-16 UNC ⊽ .75
4X ø.510 THRU
ø26.000
8.250
.709
ø27.500
7.000
ø18.561
ø20.000
3X ø5.880 THRU
ø6.020 ⊽ 1.000
ø23.724
ø.188 THRU
ø.260 ⊽ .250(NEAR SIDE)
ø.250 ⊽ .250(FAR SIDE)
11.30°
2X 38.00°
56.25°
2X 57.00°
7.000
14.000
.005 A
.005
1.50
ISOMETRIC VIEW
SCALE- 1:4
ø22.00
32
VIEW A-A
.06
ø.62
ø.75
SECTION C-C
SCALE- 2:1
4-PLACES
ø.50
ø.38
.06
SECTION B-B
SCALE- 2:1
UNLESS OTHERWISE SPECIFIED
.XX .XXX ANGLES
± .02 ± .005 ±1.00°
1. BREAK ALL SHARP EDGES TO 1/64
2. DO NOT SCALE DRAWING.
3. DIMENSIONS MADE UPON ARRIVAL IN MINIMUM
4. MAX. ALL MACH. SURFACES 125/
5. DRAWING UNITS:U.S. INCH
ORIGINATOR T.TOPE 03-OCT-2003
DRAWN B.ELLISON 03-OCT-2003
CHECKED D.FRIEND 18-NOV-2003
APPROVED T.TOPE 18-NOV-2003
USED ON ME-435483
MATERIAL 304-SST
FERMI NATIONAL ACCELERATOR LABORATORY
UNITED STATES DEPARTMENT OF ENERGY
FLARE-MECHANICAL
CRYOGENIC
DEWAR TOP PLATE
SCALE 1:2 & AS NOTED
DRAWING NUMBER 3942.320-ME-435481
SHEET 1 OF 1
REV
CREATED WITH: Ideas11NDSeries
GROUP: PPD/MECHANICAL DEPARTMENT