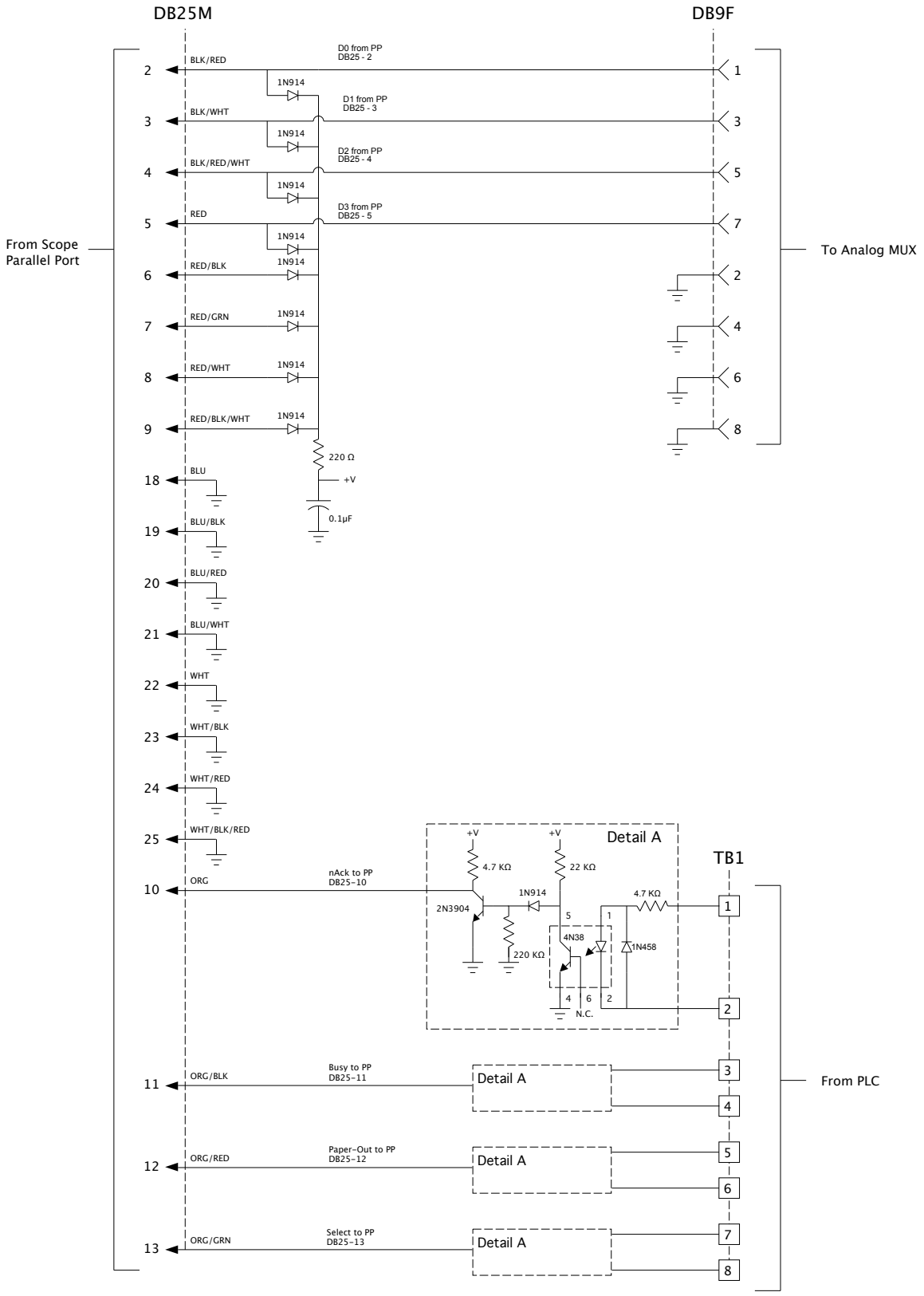

Originator: Walter F. Jaskierny	Fermilab Particle Physics Division Electrical Engineering Department		
Drawn by: Walter F. Jaskierny	Title: Purity Monitor LAr Level Interlock Interface		
Originated: 20 April 2011 Last Revision: 27 April 2011	Size: A	FSCH No	DWG No	Rev: A
Issued	Scale	Project: LAPD	Sheet