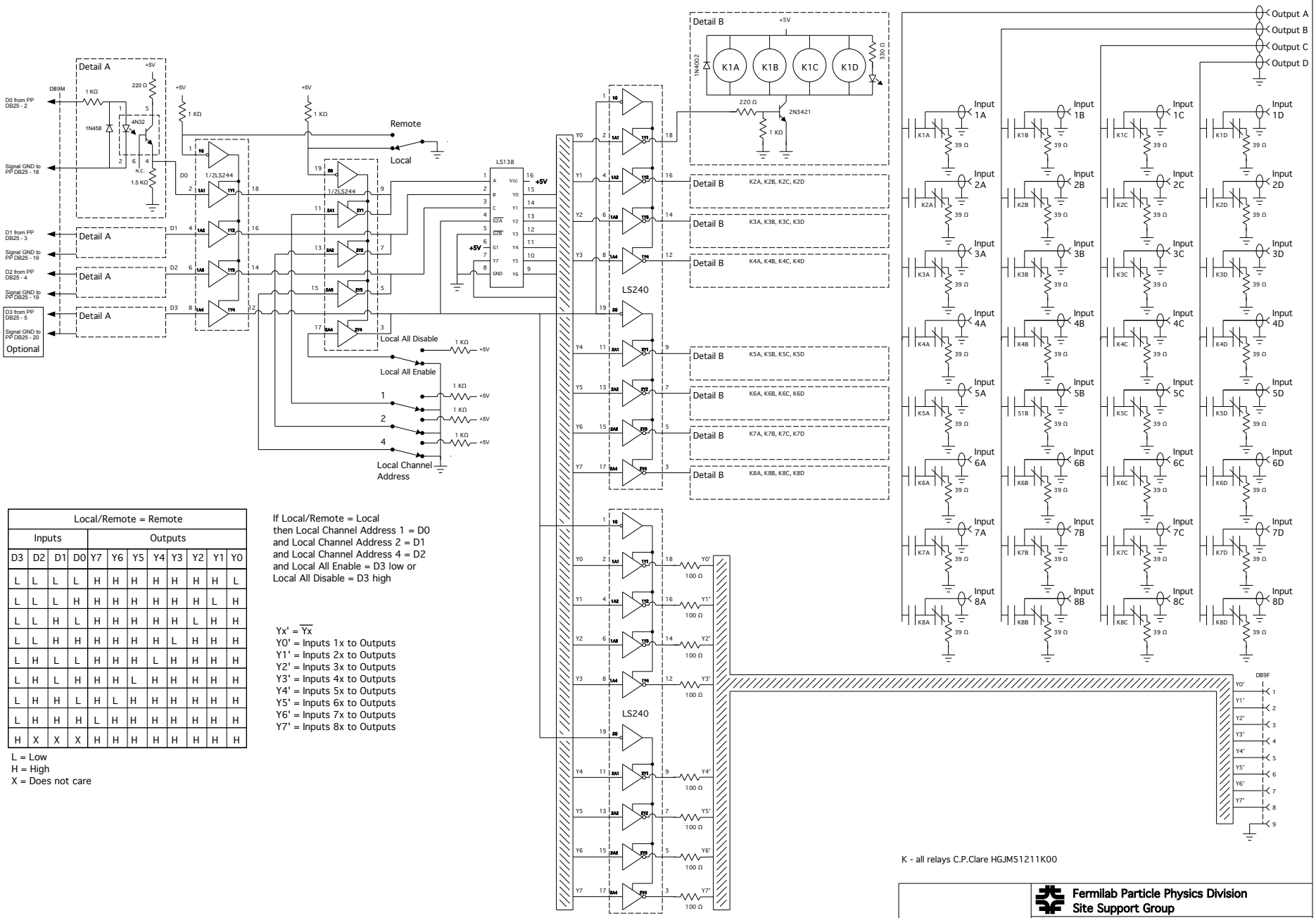


| Local/Remote = Remote | | | | | | | | | | | |
|---|---|---|---|---|---|---|---|---|---|---|---|
| Inputs | | | | Outputs | | | | | | | |
| D3 | D2 | D1 | D0 | Y7 | Y6 | Y5 | Y4 | Y3 | Y2 | Y1 | Y0 |
| L | L | L | L | H | H | H | H | H | H | H | L |
| L | L | L | H | H | H | H | H | H | H | L | H |
| L | L | H | L | H | H | H | H | H | L | H | H |
| L | L | H | H | H | H | H | H | L | H | H | H |
| L | H | L | L | H | H | H | L | H | H | H | H |
| L | H | L | H | H | H | L | H | H | H | H | H |
| L | H | H | L | H | L | H | H | H | H | H | H |
| L | H | H | H | L | H | H | H | H | H | H | H |
| H | X | X | X | H | H | H | H | H | H | H | H |

L = Low
H = High
X = Does not care

If Local/Remote = Local
then Local Channel Address 1 = D0
and Local Channel Address 2 = D1
and Local Channel Address 4 = D2
and Local All Enable = D3 low or
Local All Disable = D3 high

$Yx' = \overline{Yx}$
Y0' = Inputs 1x to Outputs
Y1' = Inputs 2x to Outputs
Y2' = Inputs 3x to Outputs
Y3' = Inputs 4x to Outputs
Y4' = Inputs 5x to Outputs
Y5' = Inputs 6x to Outputs
Y6' = Inputs 7x to Outputs
Y7' = Inputs 8x to Outputs

K - all relays C.P.Clare HGJM51211K00

Fermilab Particle Physics Division
Site Support Group

Originator: Walter F. Jaskierny
Drawn by: Walter F. Jaskierny
Originated: 12 March 2010
Last Revision:

Title: Purity Monitor Analog MUX

Size: C
FSCH No
DWG No
Rev
Issued
Scale
Project: LAPD
Sheet