REV.	BY	CHECK	Q.A.	MFG.	DATE	DESCRIPTION
A	D.S.	[illegible]	[illegible]	[illegible]	2-6-85	MOVED ITEMS 23,16 & 19 TO HD

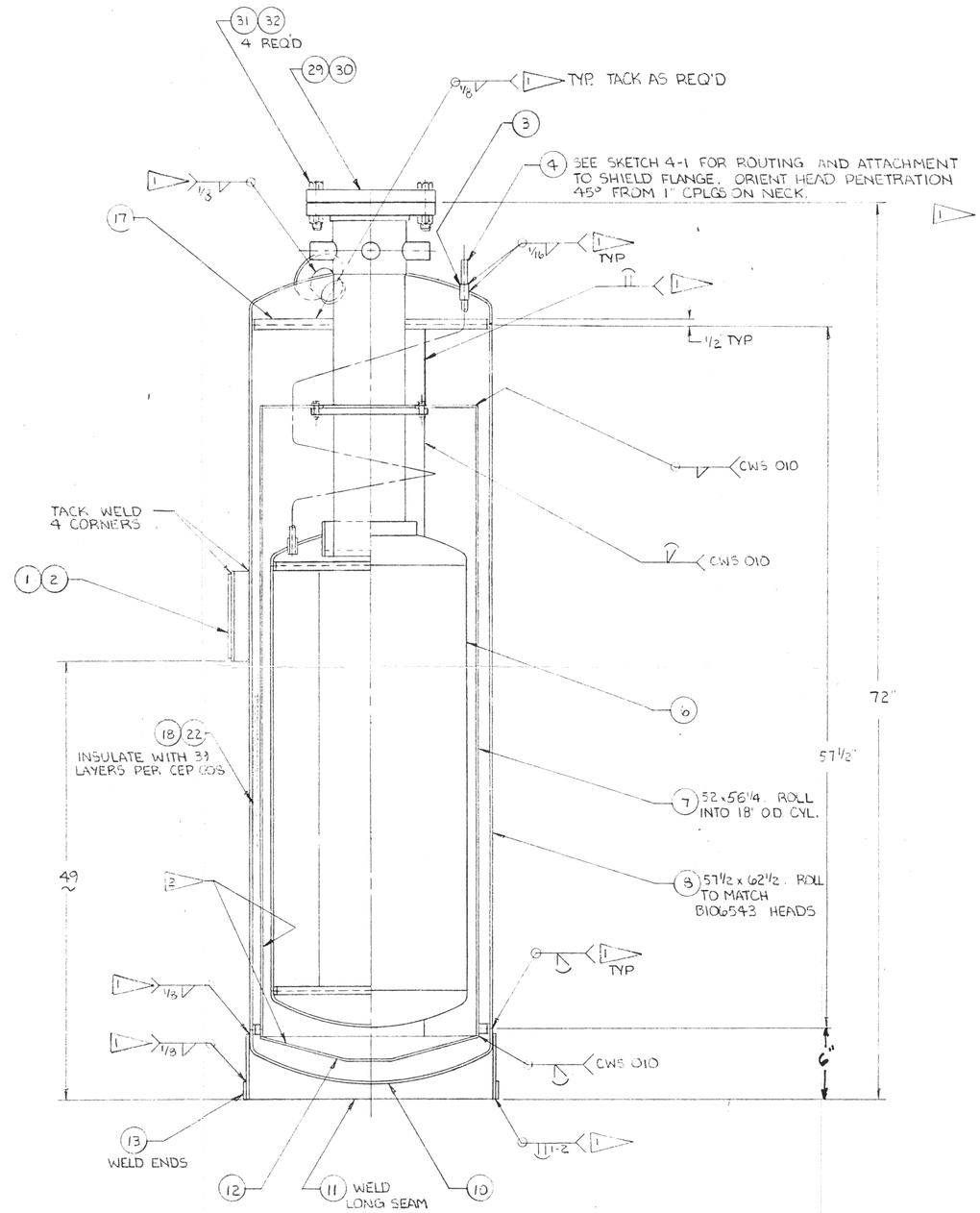

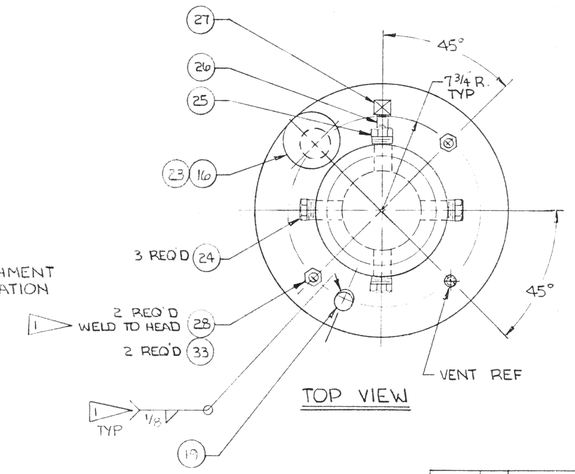

TOP VIEW

ITEM NO.	DWG. SIZE	PART NO.	QTY.	TITLE	MATERIAL SPECIFICATION
33			2	EYE BOLT	1/2-13 NC SHANK GALV STL
32			4	HEX NUT	3/4-10 UNC C'STL
31			4	HEX BOLT	3/4-10 UNC x 3 1/4 LG C'STL
30			1	"O" RING	7 x 7 3/8 x 3/16 . BUNA-N
29			1	BLIND FLANGE	6"-150# F.F. STEEL
28			2	HEX NUT	1/2-13 UNC 304 SS
27			1	VALVE	B-1VF4 WHITEY
26			1	PIPE NIPPLE	1/4 x 1 304 S.S.
25			1	PIPE BUSHING	1 x 1/4 304 S.S.
24			3	1" PIPE PLUG	304 S.S.
23			1	VACUUM RELIEF	CUSTOMER FURNISHED
22			3.0 Lb	GLASS PAPER	.0025 THK DEXTER
21					
20					
19		V-1046	1	SEAL-OFF VALVE	C.V.I (CUSTOMER FURNISHED)
18			2.1 Lb	MYLAR	.00025 THK DBL ALUMINIZED
17			2	BACK-UP RING	1/8"x1" BAR x 63" LG A479 304
~~16~~			~~1~~	~~[illegible]~~ x 3" LG	~~[illegible]~~ S.S. Delete [illegible] 2/15/85
15					
14					
13			1	STIFFENER	1/8 x 1 1/2 BAR x 64" LG 304 S.S.
12	B	106541-2	1	CONE	
11			1	SKIRT 5 1/2 x 63 1/4	12 GA (.105) SHT A 240 304 S.S.
10	B	106543	1	20" O.D. ASME F&D HD.	
9					
8			1	OUTER CYL 57 1/2 x 63	12 GA (.105) SHT SA 240 304 S.S.
7			1	SHIELD CYL 52 x 56 1/2	.080 SHT 3003 ALUM.
6	C	106537	1	INNER SHELL ASS'Y	
5					
4			1	1/2 O.D. TUBE x .035 W.T. x 10' LG	A249 TP 304 S.S.
3	B	106539-3	2	ADAPTER	
2	A	106546	1	CODE PLATE	
1	A	13287	1	CODE PLATE BRACKET	

RECEIVED
FEB 20 1985
TEVATRON

6. PRESSURIZE TO 10 PSI WARM N_2 GAS FOR SHIPMENT
5. HELIUM BOIL-OFF TEST. AQL = 28.8 S.C.F.H
4. EVACUATE PER CND 006
3. LEAK TEST PER CND 001
2. CAUSTIC ETCH INTERIOR
1. WELD PER CWS 003 OR 005

NOTES:

BRUNING 40-105 43655

NEXT ASSY	USED ON	NEXT ASSY	FINAL ASSY
APPLICATION		QUANTITY REQUIRED	

UNLESS OTHERWISE SPECIFIED
DIMENSIONS ARE IN INCHES
DIMENSIONAL TOLERANCES
FRACTION ±1/8 | DECIMAL .x ±.1 | .xx ±.03 | .xxx ±.010 | ANGLE ±1/2°
FILLETS AND RADII .01-.03
REMOVE BURRS, BREAK SHARP EDGES .01-.03

CONTRACT
DRAWN D. SNYDER 1-17-85
CHECK [illegible] 1-18-85
Q.A. [illegible] 1-22-85
MFG.
APPROVED [illegible] 1-22-85
APPROVED

CRYOGENIC ENERGY COMPANY
DENVER, COLORADO

120 LTR ASSY

CODE IDENT NO.	SIZE		REV.
14487	D	106538	A
SCALE 1:6	WEIGHT	SHEET 1 OF 1	