EXCELLENCE IN MAGNETICS AND CRYOGENICS

MODEL 286 LIQUID LEVEL CONTROLLER

INSTALLATION, OPERATION, AND MAINTENANCE INSTRUCTIONS

American Magnetics, Inc.

PO Box 2509, 112 Flint Road, Oak Ridge, TN 37831-2509, Tel: 865 482-1056, Fax: 865 482-5472

Feb 2000

Model 286 Configuration

AMI Order Number:_____ Shipping Date:_____

Model 286 Serial #:_____ Firmware Revision:_____

Input Power Requirements:_____

Calibration Passcode:_____

Configuration Notes:

_____

_____

_____

_____

_____

_____

_____

_____

AMI Warranty

All products manufactured by AMI are warranted to be free of defects in materials and workmanship and to perform as specified for a period of one year from date of shipment. In the event of failure occurring during normal use, AMI, at its option, will repair or replace all products or components that fail under warranty, and such repair or replacement shall constitute a fulfillment of all AMI liabilities with respect to its products. Since, however, AMI does not have control over the installation conditions or the use to which its products are put, no warranty can be made of fitness for a particular purpose, and AMI cannot be liable for special or consequential damages. All warranty repairs are F.O.B. Oak Ridge, Tennessee, USA.

Copyright © 2000 by American Magnetics, Inc., Oak Ridge, Tennessee, USA
Rev. 0

Table of Contents

1 Introduction 1

1.1 Model 286 Features 1

1.2 Front Panel Layout 3

1.3 Rear Panel Layout 4

1.4 Model 286 Specifications @ 25 °C 6

1.5 Controller Modes Description 7

1.5.1 Normal Mode 7
1.5.2 Auto-Changeover Mode 8
1.5.3 Pre-Cool Mode 9

2 Installation 11

2.1 Unpacking the Instrument 11

2.2 Rack Mounting the Instrument 12

2.3 Installing the Sensors in the Vessels 12

2.4 Connecting the Oscillator Cables to the AMI Sensors 13

2.5 Connecting C and D Sensor Inputs to the Oscillator 13

2.6 Installing the Optional Solenoid-operated Fill Valves 14

2.7 Connecting to Optional Analog Outputs 15

2.8 Connecting to Communication Options 15

2.9 Connecting the Instrument to Power 15

3 Calibration 17

3.1 Calibration Concepts 17

3.2 Calibration Methods 19

3.2.1 Open Dewar Calibration 21
3.2.2 Closed Dewar Calibration 22
3.2.3 Approximate Calibration 26

3.3 Calibration Menu Reference 29

3.3.1 CAL Menu and Passcode Entry 30
3.3.2 Sensor Input Selection 30
3.3.3 Action for Selected Input 30
3.3.4 Select Calibration Sub-Menu 31
3.3.5 Perform Calibration Sub-Menu 33

4 Operation 37

4.1 Operational Guidelines 37

4.1.1 Energize the Instrument 37
4.1.2 Assign Sensor Inputs to the Channels 38

Table of Contents

4.1.3 Select the Appropriate Units 38
4.1.4 Configure the HI and LO Alarms 38
4.1.5 Configure the A SETPOINT and the B SETPOINT...39
4.1.6 Select the Controller Mode 40

4.2 Sensor Contamination 42

4.3 Menu Reference 43

4.3.1 Accessing Menus 43
4.3.2 HI Menu 44
4.3.3 LO Menu 45
4.3.4 A Menu 45
4.3.5 B Menu 46
4.3.6 RATE Menu 46
4.3.7 FILL Menu in Normal Mode 46
4.3.8 FILL Menu in Auto-Changeover Mode 48
4.3.9 FILL Menu in Pre-Cool Mode 50
4.3.10 ASN Menu 53
4.3.11 MODE Menu 53
4.3.12 MISC Menu 54
4.3.13 CAL Menu 55

4.4 Feature Matrix 56

5 Remote Interface Reference 57

5.1 SCPI Command Summary 57

5.2 Programming Overview 61

5.2.1 SCPI Language Introduction 61
5.2.2 SCPI Status System 61
5.2.3 Standard Event Registers 65
5.2.4 Alarm Registers 66
5.2.5 Measurement Registers 67
5.2.6 Command Handshaking 69
5.2.7 Remote Units 70

5.3 RS-232/422 Configuration 70

5.3.1 Serial Port Connector 70
5.3.2 Termination Characters 71
5.3.3 Device Clear 71

5.4 IEEE-488 Configuration 71

5.4.1 Termination Characters 71
5.4.2 Device Clear 71

5.5 Command Reference 72

5.5.1 System-Related Commands 72
5.5.2 Status System Commands 73
5.5.3 Alarm Configuration Commands and Queries 75
5.5.4 Level and Usage Queries 76

Table of Contents

5.5.5 Fill Modes Control and Query Commands 76
5.5.6 Assignment Commands and Queries 79
5.5.7 Calibration Commands and Queries 80
5.5.8 Remote Units Commands and Queries 81

5.6 Error Messages 83

5.6.1 Command Errors 83
5.6.2 Query Errors 85
5.6.3 Execution Errors 85
5.6.4 Device Errors 86

6 Service 89

6.1 Model 286 Maintenance 89

6.2 Model 286 Troubleshooting Hints 89

6.3 Modifying the Line Voltage Input Range 95

6.4 Additional Technical Support 95

6.5 Return Authorization 96

Appendix 97

A.1 4-20 mA Current Loop Option 97

A.2 J5A and J5B Connector Pinout 98

A.3 IEEE-488 Connector (optional) 100

A.4 RS-232 Connector (optional) 101

A.5 RS-422 Connector (optional) 102

Index 103

Table of Contents

Foreword

Purpose and Scope

This manual contains the operation and maintenance instructions for the American Magnetics, Inc. Model 286 Liquid Level Controller. The manual outlines the instructions for instrument use in typical system designs. Since it is impossible to cover all possible system/sensor designs, the most common configurations are discussed and the user is encouraged to contact an authorized AMI Technical Support Representative for information regarding specific configurations not explicitly covered in this manual.

Contents of This Manual

Introduction introduces the reader to the functions and characteristics of the instrument. It provides the primary illustrations of the front and rear panel layouts as well as documenting the performance specifications.

Installation describes how the instrument is unpacked and installed in conjunction with ancillary equipment in a typical liquid delivery system.

Calibration details the available calibration methods and discusses all related display menu items.

Operation describes how the instrument is used to measure and control the liquid level. *All* instrument displays and controls are documented.

Remote Interface Reference documents all remote commands and queries available through the serial and IEEE-488 interfaces. A quick-reference summary of commands is provided as well as a detailed description of each.

Service provides guidelines to assist the user in troubleshooting possible system and instrument malfunctions. Information for contacting AMI Technical Support personnel is also provided.

The ***Appendix*** documents the rear panel connectors.

Applicable Hardware

The Model 286 has been designed to operate with AMI Capacitance-Based Liquid Level Sensors. Operation with other sensors is not recommended and may void the warranty.

General Precautions

Cryogen Safety

Personnel handling cryogenic liquids should be thoroughly instructed and trained as to the nature of the liquids. Training is essential to minimize accidental spilling. Due to the low temperature of these materials, a cryogen spilled on many objects or surfaces may damage the surface or cause the object to shatter, often in an explosive manner.

Inert gases released into a confined or inadequately ventilated space can displace sufficient oxygen to make the local atmosphere incapable of sustaining life. Cryogenic liquefied gases are potentially extreme suffocation hazards since a small amount of liquid will vaporize and yield a very large volume of oxygen-displacing gas. Always ensure the location where the cryogen is used is well ventilated. Breathing air with insufficient oxygen content may cause unconsciousness without warning. If a space is suspect, purge the space completely with air and test before entry. If this is not possible, wear a forced-air respirator and enter only with a co-worker standing by wearing a forced-air respirator.

Cryogenic liquids, due to their extremely low temperatures, will burn the skin in a similar manner as would hot liquids. Never permit cryogenic liquids to come into contact with the skin or allow liquid nitrogen to soak clothing. Serious burns may result from careless handling. Never touch uninsulated pipes or vessels containing cryogenic liquids. Flesh will stick to extremely cold materials. Even nonmetallic materials are dangerous to touch at low temperatures. The vapors expelled during the venting process are sufficiently cold to burn flesh or freeze optic tissues. Insulated gloves should be used to prevent frost-bite when operating valves on cryogenic tanks. Be suspicious of valves on cryogenic systems; the extremes of temperature they undergo cause seals to fail frequently.

In the event a person is burned by a cryogen or material cooled to cryogenic temperatures, the following first aid treatment should be given pending the arrival and treatment of a physician or other medical care worker:

1. If any cryogenic liquid contacts the skin or eyes, immediately flush the affected area gently with tepid water (102°F – 105°F, 38.9°C – 40.5°C) and then apply cold compresses.

2. Do not apply heat. Loosen any clothing that may restrict circulation. Apply a sterile protective dressing to the affected area.

3. If the skin is blistered or there is any chance that the eyes have been affected, get the patient immediately to a physician for treatment.

Containers of cryogenic liquids are self pressurizing (as the liquid boils off, vapor pressure increases). Hoses or lines used to transfer these liquids should never be sealed at both ends (i.e. by closing valves at both ends).

When pouring cryogenic liquids from one container to another, the receiving container should be cooled gradually to prevent damage by thermal shock. The liquid should be poured slowly to avoid spattering due to rapid boil off. The receiving vessel should be vented during the transfer.

Introduction of a substance at or near room temperature into a cryogenic liquid should be done with great caution. There may be a violent gas boil off and a considerable amount of splashing as a result of this rapid boiling. There is also a chance that the material may crack or catastrophically fail due to forces caused by large differences in thermal contraction of different regions of the material. Personnel engaged in this type of activity should be instructed concerning this hazard and should always wear a full face shield and protective clothing. If severe spraying or splashing could occur, safety glasses or chemical goggles along with body length protective aprons will provide additional protection.

The properties of many materials at extremely low temperatures may be quite different from the properties that these same materials exhibit at room temperatures. Exercise extreme care when handling materials cooled to cryogenic temperatures until the properties of these materials under these conditions are known.

Metals for use in cryogenic equipment application must posses sufficient physical properties at these low temperatures. Since ordinary carbon steels, and to somewhat a lesser extent, alloy steels, lose much of their ductility at low temperatures, they are considered unsatisfactory and sometimes unsafe for these applications. The austinetic Ni-Cr alloys exhibit good ductility at these low temperatures and the most widely used is 18-8 stainless steel. Copper, Monel®, brass and aluminum are also considered satisfactory materials for cryogenic service.

Safety Summary

Cryogenic storage systems are complex systems with the potential to seriously injure personnel or equipment if not operated according to procedures. Proper use of safety mechanisms (pressure relief valves,

rupture disks, etc.) included in the cryostat and top plate assembly are necessary.

Recommended Safety Equipment

- First Aid kit
- Fire extinguisher rated for class C fires
- Leather gloves
- Face shield
- Signs to indicate that there are potentially dangerous cryogens in use in the area.

Safety Legend

⚠ Instruction manual symbol: the product is marked with this symbol when it is necessary for you to refer to the instruction manual in order to protect against damage to the product or personal injury.

Hazardous voltage symbol.

~ Alternating Current (Refer to IEC 417, No. 5032).

○ Off (Supply) (Refer to IEC 417, No. 5008).

| On (Supply) (Refer to IEC 417, No. 5007).

Warning

The Warning sign denotes a hazard. It calls attention to a procedure or practice, which if not correctly adhered to, could result in personal injury. Do not proceed beyond a Warning sign until the indicated conditions are fully understood and met.

Caution

The Caution sign denotes a hazard. It calls attention to an operating procedure or practice, which if not adhered to, could cause damage or destruction of a part or all of the product. Do not proceed beyond a Caution sign until the indicated conditions are fully understood and met.

Ch 1 & 2 This notation in the margin indicates a feature that is only available for Channels 1 and 2 of the Model 286.

1 Introduction

1.1 Model 286 Features

The American Magnetics, Inc. (AMI) Model 286 Liquid Level Controller is a microprocessor-based instrument designed to provide multiple sensor capacitance-based monitoring and control of liquid levels. In addition to the brief feature descriptions provided below, a detailed feature matrix is provided on page 56.

1.1.1 Capacitance-Based Level Sensing

A typical control system consists of a Model 286 Liquid Level Controller, up to four AMI liquid level sensor(s), and connecting coaxial cable(s). The primary instrument sensing element is typically a 3/8 inch (9.5 mm) OD concentric-tube cylindrical capacitor constructed of stainless steel which allows the fluid to become the dielectric between the concentric cylinders. The instrument measures the sensor capacitance, which is directly related to the percentage of the sensor immersed in the liquid.

1.1.2 Multiple Sensor Monitoring and Control

The Model 286 is capable of monitoring four independent, capacitance level sensors and controlling liquid level in up to two vessels by directly controlling the actuation of two solenoid-operated flow control valves.

1.1.2.1 Factory calibrated

The Model 286 is typically calibrated by AMI for matched sensors in liquid nitrogen, and is ready for immediate use upon delivery. If the working fluid is something other than nitrogen, an approximate calibration can be performed or the customer must perform an open or closed dewar calibration after installation when the sensor can be immersed in the target fluid.

1.1.2.2 Multiple calibrations per sensor

Each of the four sensor inputs to the Model 286 can have up to four independent calibrations, which are user-selectable. The user simply selects the desired calibration using the menu-type interface. All calibration data is passcode protected and stored in nonvolatile memory.

1.1.3 Convenient Display and Direct Keypad Entry

The instrument is equipped with a 16-character x 2-line backlit character-mode LCD display which provides liquid level and setpoint indication in inches, centimeters, or percent as selected by the user. The default display

indicates liquid level and fill/loss rate. The current liquid level is updated and visible in many of the display modes used in configuring various settings of the instrument.

The 4 x 4 keypad is provided for direct entry of values for setpoints, sensor length, and other functions. The keypad also provides a convenient menu-type interface for configuring various instrument settings that require selection from a list of options.

1.1.4 HI/LO Alarms

Two user-defined setpoints, HI and LO, are provided for all four channels with front panel LED indications for Channels 1 and 2. The HI and LO setpoints may also operate two pairs of low-current, rear panel relay contacts and a built-in audible alarm. The HI/LO relay contact pairs may be assigned to Channels 1 and 2, or to Channels 3 and 4.

1.1.5 Controller Modes

The Model 286 provides three controller modes: *normal*, *auto-changeover*, and *pre-cool*. The preferred mode can be selected via the front panel keypad or remote interface. The level control sequence varies based on the selected mode. See the discussion beginning on page 7 for more information regarding the function of the controller modes.

1.1.6 Remote Operation

The Model 286 is capable of providing up to two analog 0–10 VDC signals, which corresponds to 0–100% liquid level, accessible from the rear panel of the instrument for use with a voltage recorder. This is a factory-installed option and should be specified at the time the instrument is purchased.

Up to two self-powered (i.e. does not require an external power supply) 4-20 mA current loop outputs can also be ordered as an option.

Additional digital interface options, including RS-232, RS-422, or GPIB (IEEE 488.2 compliant), are available as options. The serial or GPIB remote interface provides a comprehensive command set for remote monitoring and configuration of all functions of the instrument.

1.2 Front Panel Layout

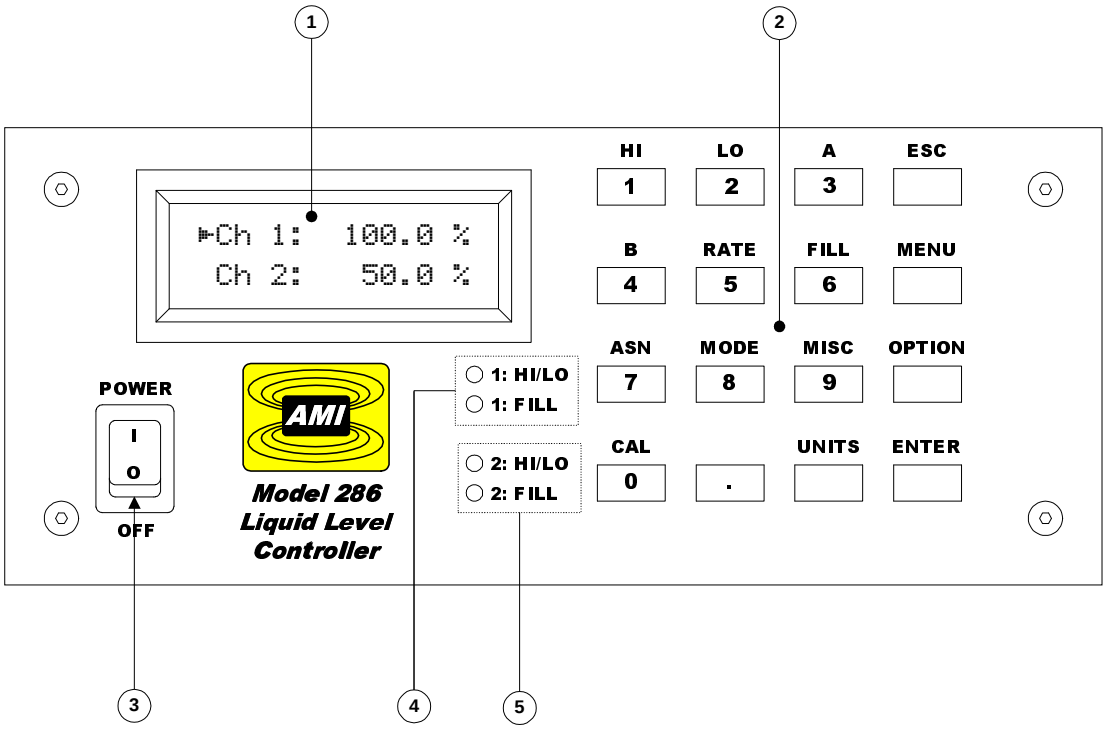

1	16 Character x 2 Line LCD Display with LED Backlighting	**4**	HI/LO Alarm and Fill LED Indicators for Channel 1
2	4 x 4 Keypad	**5**	HI/LO Alarm and Fill LED Indicators for Channel 2
3	Power Switch		

1.3 Rear Panel Layout

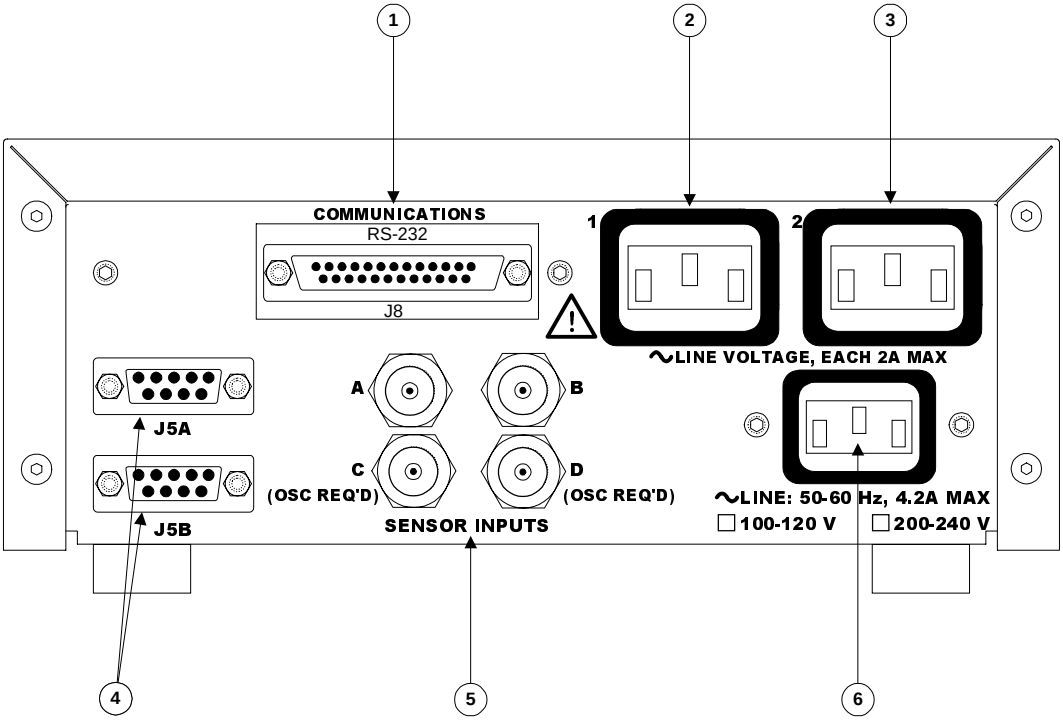

1	Optional Digital Communications Port (RS-232 option illustrated; RS-422 or IEEE-488 also available)	**4**	Auxiliary DB-9 Connectors (see *Appendix* for pinout)
2	Switched AC Output 1 (IEC-320 female connector)	**5**	Four BNC Coaxial Sensor Inputs [denoted as A - D]
3	Switched AC Output 2 (IEC-320 female connector)	**6**	Power cord connector (IEC-320 male)

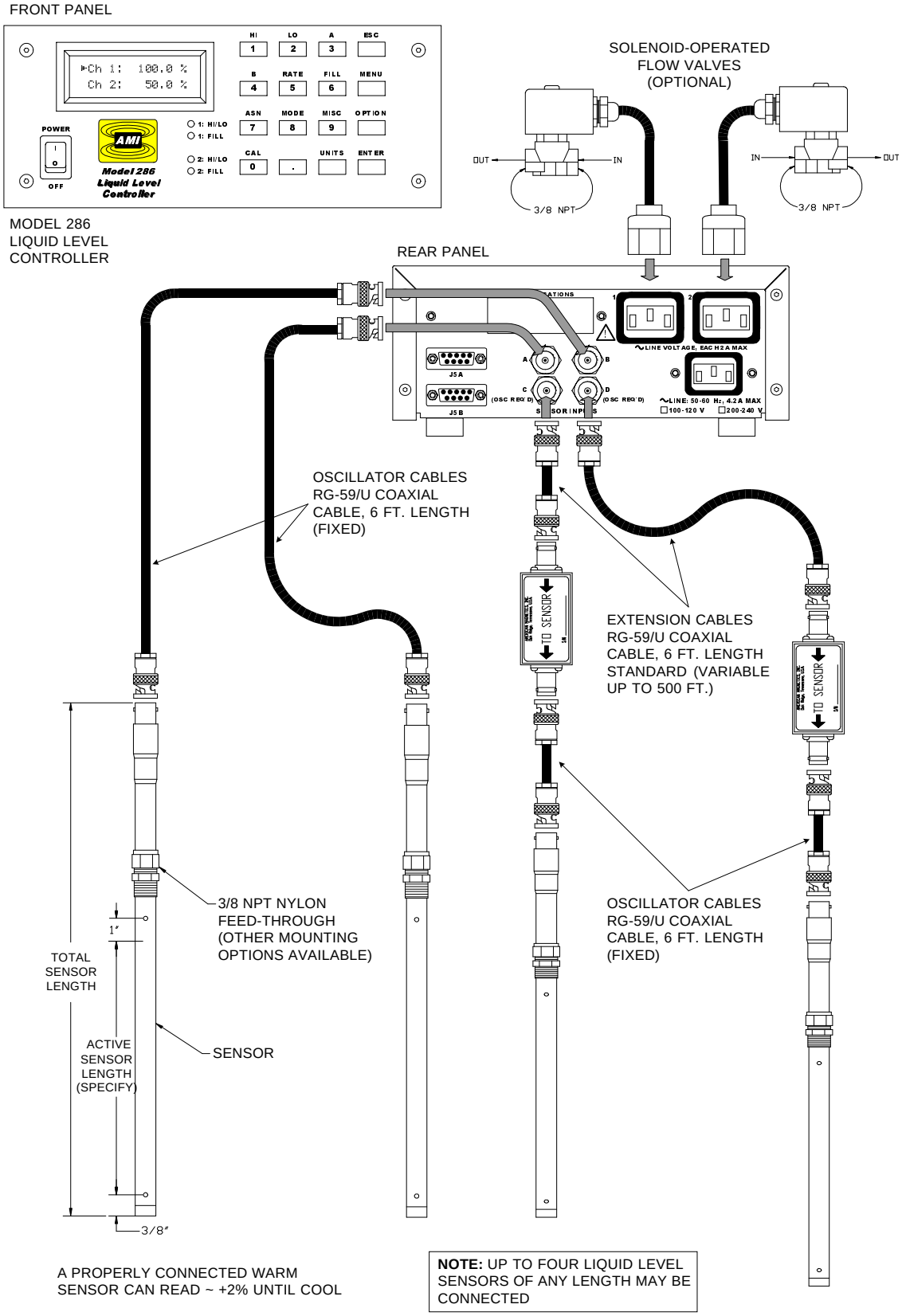

Figure 1-1. Model 286 instrument, fill valves, and sensor system diagram.

1.4 Model 286 Specifications @ 25 °C

Level Measurements	
Resolution:	0.1 %, 0.1 cm, or 0.1 in
Linearity:	± 0.1 %
Operating Parameters	
HI, A, B, and LO Setpoints:	0 % to 100 % adjustable
HI/LO Alarm Relay Contact Ratings:	30 VAC or 60 VDC, 10 VA (up to 0.5A maximum) — 20 V at 0.5 A to 60 V at 0.167 A (normally open, closed on alarm)
Controller Outputs:	AC line voltage at 2 A maximum each output
Analog Outputs	
Integral Non-linearity:	± 0.012 %
Resolution:	16 bits
Total Error:	± 0.75 % for 4-20 mA output ± 1 % for 0-10 V output
Current Drift (4-20 mA):	± 75 ppm / °C maximum
Voltage Drift (0-10 V):	± 100 ppm / °C maximum
Power Requirements	
Primary:	100-120 or 200-240 VAC ±10%, 50 - 60 Hz 4.2 A maximum (25 VA plus sum of controller output currents)
Physical	
Dimensions (Standard):	97 mm H x 213 mm W x 290 mm D (3.8" H x 8.4" W x 11.4" D)
Weight (Standard):	1.9 kg (4.2 lbs.)
Dimensions (Rack Mount):	89 mm H x 483 mm W x 290 mm D (3.5" H x 19" W x 11.4" D)
Weight (Rack Mount):	2.2 kg (4.9 lbs.)
RG-59U Extension Cable Length:	500 ft. maximum
Environmental	
Ambient Temperature:	Operating: 0 °C to 40 °C (32 °F to 104 °F) Nonoperating: –20 °C to 60 °C (–4 °F to 140 °F)
Relative Humidity:	0% to 95%; non-condensing

1.5 Controller Modes Description

The Model 286 provides a unique feature in the availability of three modes for level control. The function of each mode is summarized below and a diagram is provided to help illustrate the function. The controller modes provide flexibility for solving a wide range of level control problems with a minimum of external hardware or logic.

1.5.1 Normal Mode

In the normal mode, as shown in Figure 1-2, Channels 1 and 2 of the Model 286 act as independent auto-fill systems. As each level falls below the “B” setpoint, an independent fill cycle is initiated and fills the controlled dewar to the “A” setpoint via two separate solid-state-relay-controlled AC outputs which can drive solenoid-actuated valves. The A and B setpoints for Channels 1 and 2 operate as independent liquid level control bands.

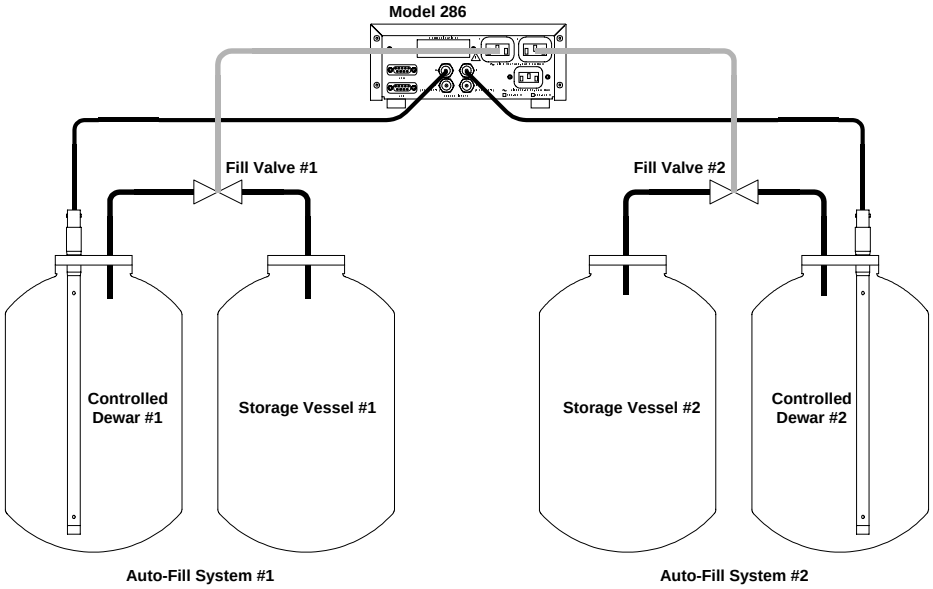

Figure 1-2. Normal mode diagram illustrating two *independent* auto-fill systems.

1.5.2 Auto-Changeover Mode

In auto-changeover mode, as illustrated in Figure 1-3, the Model 286 monitors and controls liquid level measured via Channel 1, and uses liquid supplied from two storage vessels. The A and B setpoints for Channel 1 function as the liquid level control band for the controlled dewar. The dual AC outputs control a fill valve for each of the two storage vessels. Channel 2 is unavailable in the auto-changeover mode.

The instrument either monitors dry contacts to determine availability of liquid from each of the two storage vessels or determines availability by fill timeouts. The Model 286 automatically switches from one storage vessel to the next. This allows one of the two storage vessels to be replaced when empty without interrupting the availability of liquid to the controlled dewar.

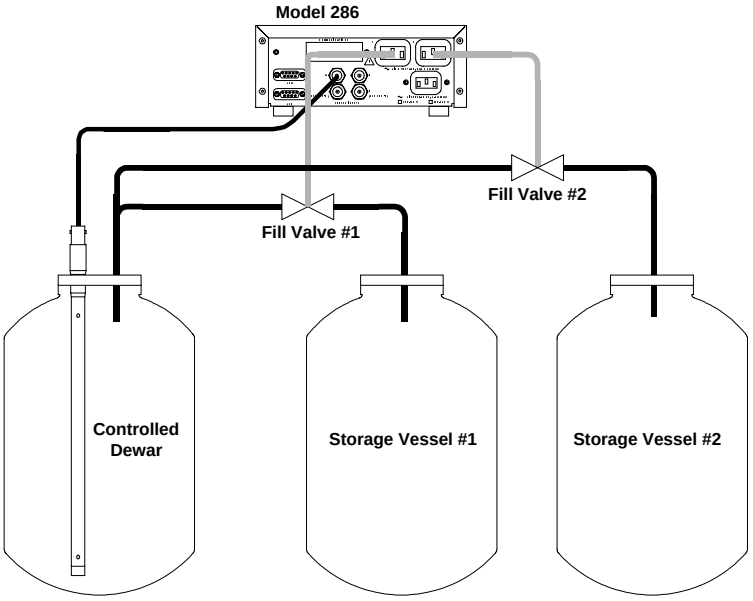

Figure 1-3. Auto-changeover mode diagram illustrating the two storage vessels and one controlled dewar.

1.5.3 Pre-Cool Mode

The pre-cool mode, as illustrated in Figure 1-4, provides for cooling of a cryogen transfer line before opening the transfer line to the controlled dewar. The A and B setpoints for Channel 1 function as the liquid level control band for the controlled dewar. AC Output 1 controls a fill valve for the controlled dewar, while AC Output 2 controls a vent valve. Channel 2 is unavailable in the pre-cool mode.

When a fill cycle is initiated, the vent valve is initially opened for a user-programmed time, after which the vent valve is closed and the fill valve to the controlled dewar is opened. During the time the vent valve is open, the cryogen cools the transfer line, so that there is a minimal amount of cryogen gas entering the controlled dewar once the fill valve is opened.

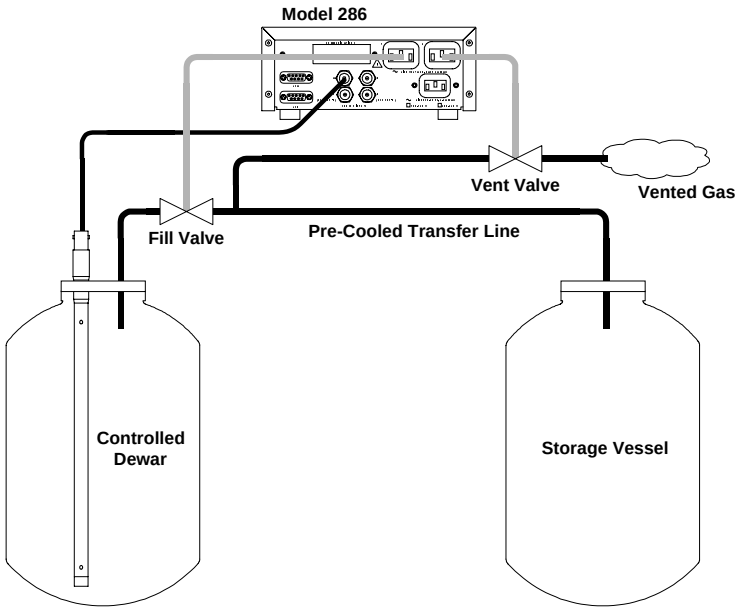

Figure 1-4. Pre-cool mode diagram illustrating one storage vessel, a vent valve, and one controlled dewar.

2 Installation

Warning

Before energizing the instrument, the earth ground of the power receptacle must be verified to be at earth potential and able to carry the rated current of the power circuit. Using extension cords should be avoided; however, if one must be used, ensure the ground conductor is intact and capable of carrying the rated current.

In the event that the ground path of the instrument becomes less than sufficient to carry the rated current of the power circuit, the instrument should be disconnected from power, labeled as unsafe, and removed from place of operation.

Do not operate this instrument in the presence of flammable gases. Doing so could result in a life-threatening explosion.

Do not modify this instrument in any way. If component replacement is required, return the instrument to AMI facilities as described in the Service section of this manual.

If the instrument is used in a manner not specified by AMI, the protection provided by the equipment may be impaired.

2.1 Unpacking the Instrument

Carefully remove the instrument, sensor(s), oscillator(s) and interconnecting coaxial cables from the shipping carton and remove all packaging material. A rack mounting kit is supplied if the instrument was purchased with the rack mount option.

Note

If there is any shipping damage, save all packing material and contact the shipping representative to file a damage claim. Do not return the instrument to AMI unless prior authorization has been received.

If the chassis is a table top model, place the instrument on a flat, secure surface.

2.2 Rack Mounting the Instrument

If the instrument has a rack mount chassis, follow the following procedure:

a. Attach the rack mount adapter pieces to the instrument by first removing the four screws on the side of the instrument that attach the cover to the chassis. Attach the rack mount adapter pieces to the sides of the instrument by reinstalling the screws.

b. Install the instrument in a 19" rack by securing the front panel to the rail in each of the four corners with mounting hardware supplied by the cabinet manufacturer.

Warning

Do not remove the rubber feet from the bottom of the intsrument and then reinsert the original screws. Doing so could present a severe life-threatening electrical hazard. Screws longer than 1/4" will contact and damage the printed circuit board inside the unit.

2.3 Installing the Sensors in the Vessels

Exercise care when installing the sensor since dents, crimps, bends or other physical distortions in the cylindrical capacitor will change electrical characteristics, possibly causing calibration errors and/or disruption of proper instrument operation. Before installing the sensor, the user may want to review the *Calibration* and *Operation* sections to determine what, if any, calibration procedures may be necessary.

Note

The coaxial interconnecting cables and the oscillator are temperature sensitive and should be mounted in such a manner as to avoid large temperature changes such as those encountered in the path of dewar vents.

2.4 Connecting the Oscillator Cables to the AMI Sensors

For Model 286 inputs A and B, connect each sensor to the Model 286 using a supplied 6 foot RG-59/U coaxial cable.

For Model 286 inputs C and D, an external AMI oscillator must be used (note that inputs A and B do not require an external oscillator). For each sensor to be connected to either input C or input D of the instrument, connect the sensor to the oscillator using a supplied 6 foot RG-59/U coaxial cable. Ensure the oscillator is connected in the correct orientation (see page 5 for a system diagram).

The cable length between the instrument and sensor for inputs A and B (or the oscillator and the sensor for inputs C and D) should not exceed 6 feet unless longer lengths were discussed with an Authorized AMI Technical Representative.

Caution

Moisture or contaminants in any of the BNC coaxial connectors can short out the sensor and cause a <No inp> *indication or other erroneous readings. A pack of non-conductive electrical connection lubricant (ECL or "Dielectric Tune-up Grease") has been included with the liquid level sensor packaging to reduce the possibility of this occurring. If desired, apply a small amount of ECL to any of the BNC connectors that may be exposed to moisture. Mate the ECL-coated connectors then remove any excess ECL from the outside of the connector. Added protection can be achieved by covering the ECL-coated connections with a short section of heat-shrink tubing.*

Note

MSDS sheets for the ECL are available upon request.

2.5 Connecting C and D Sensor Inputs to the Oscillator

Caution

Operation of the AMI Model 286 Liquid Level Instrument with a device other than an AMI Liquid Level Sensor may void the instrument warranty.

Connect each oscillator to either the C or D input of the Model 286 using a RG-59/U coaxial cable. The length of the extension cable can be varied to suit the specific application. AMI has confirmed proper operation for up to 500 feet of RG-59/U coaxial cabling between the instrument and oscillator.

2.6 Installing the Optional Solenoid-operated Fill Valves

Install each solenoid-operated fill valve by connecting the valve power cable to the AC controller output receptacle on the rear panel of the instrument (refer to the rear panel layout illustrated on page 4). The standard AMI supplied valve has a 9/32 inch orifice and the input and output are tapped for 3/8 NPT. Setting the FILL function to AUTO should be avoided until the channels have been assigned and the setpoints have been specified. See the *Operation* section for details on assigning channels, specifying setpoints, and selecting the fill modes for the AC output receptacles.

Note

When using the pre-cool mode, AC output 1 must be connected to the fill valve and AC output 2 must be connected to the vent valve.

Caution

When using a solenoid-operated control valve with the Model 286, ensure the valve is configured for the operating voltage and line frequency of the Model 286. Failure to do so will result in faulty operation and may also result in valve damage.

Warning

Before touching any of the controller output receptacle terminals or touching the wiring connected to these terminals, remove power to the instrument by unplugging it or turning the power switch to the off position.

The controller output receptacle supplies hazardous AC line voltage potentials. It is for use with equipment which has no live parts which are accessible. Conductors connected to its terminals must be insulated from user contact by reinforced or double insulation capable of withstanding 4250 V (impulse) for a 240 VAC Category II installation, or 2550 V (impulse) for a 120 VAC Category II installation.

This instrument is designed for operation from a single-phase power source for maximum safety. The controller output receptacle circuitry only switches the "line" ("hot") connection to the AC mains. If two-phase power is applied, any equipment connected to the controller output receptacle conducts hazardous AC voltage even when the controller output receptacle is not energized.

2.7 Connecting to Optional Analog Outputs

See paragraph A.1 on page 97 for connection details for the 4-20 mA analog output option. See paragraph A.2 on page 98 for connection details for the 0-10 VDC analog output option.

2.8 Connecting to Communication Options

See paragraph 5.3.1 on page 70 instructions concerning connection to the serial communications options (RS-232 and RS-422). Paragraph A.4 on page 101 shows RS-232 cable wiring. Paragraph A.5 on page 102 shows RS-422 cable wiring. The IEEE-488 option should be connected using a standard GPIB cable. See paragraph A.3 on page 100 for the Model 286 GPIB connector pinout.

2.9 Connecting the Instrument to Power

Warning

The Model 286 operates on 50-60 Hz power and may be configured for 110-120 or 208-240 VAC ±10% (100 or 200 VAC ±10% for Japan and South Korea). The power requirement for each instrument is marked on the calibration sticker on the bottom of the instrument. Be sure your instrument is configured for your power source prior to plugging in the line cord. Do not fail to connect the input ground terminal securely to an external earth ground.

Ensure the front panel switch is in the OFF position. Verify that the instrument is configured for the proper operating voltage by referring to the calibration sticker affixed to the bottom of the instrument. If the operating voltage is correct, plug the line cord into the appropriate power receptacle.

Warning

Do not install the instrument in a manner that prevents removal of the line cord from the rear panel of the instrument.

3 Calibration

The Model 286 Liquid Level Controller is typically calibrated at the factory for specific length sensors for use in specific target liquids. The calibration lengths and calibration liquids are listed on the configuration sheet supplied with this manual. If a factory calibration method utilized was approximate, the calibration length will be noted as an approximate value.

3.1 Calibration Concepts

3.1.1 Relationship between Calibration and Sensor Length

The capacitance-based method of measuring the liquid level operates by measuring the period of an oscillator, which is contained in the oscillator/ transmitter unit (or contained in the instrument for sensor inputs A and B). As the liquid level varies, the value of the capacitance and the period of the oscillator vary proportionally. Since the dielectric properties of liquids vary and the component tolerances for the sensor and oscillator introduce variations, a calibration is required to assure maximum accuracy for a specific sensor immersed in the target liquid. The calibration MIN and MAX settings correspond to the minimum and maximum oscillation periods, respectively, for a given sensor and target liquid configuration.

The LENGTH setting of the instrument is only provided as a means of scaling the 0% (MIN) to 100% (MAX) range of the measurement to meaningful units of length. Before the calibration it is important to accurately measure the distance between the physical locations on the sensor corresponding to the desired MAX and MIN calibration points. The measured value for the length will be used in configuring the instrument for operation.

3.1.2 Variations in the Dielectric with Changing Density

For cryogenic liquids, the dielectric of the liquid will change with a change in density. The amount of change is dependent on the properties of the specific liquid. Figure 3-1 illustrates the variations in dielectric for nitrogen vs. pressure under *saturated* conditions.[1] Since the instrument uses a capacitance-based method for determining liquid level, such a change in the dielectric of the liquid will result in a shift in the level reading of the instrument. The calibration procedures described herein are most accurate when applied in situations where the operating conditions of the cryo-vessel are relatively constant, i.e. the operating pressure and temperature of the cryo-vessel are relatively constant.

1. Data obtained from NIST Standard Reference Database 12.

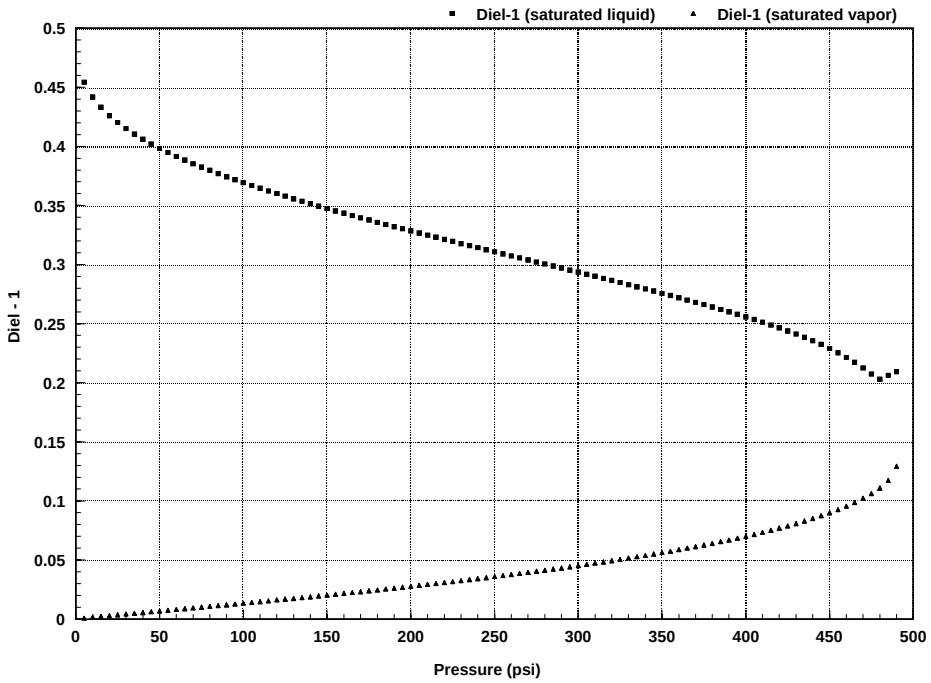

Figure 3-1. Dielectric vs. pressure for nitrogen under saturated conditions.

To minimize the effects of shifts in the dielectric of the target liquid, perform a closed dewar calibration (see page 22) at the expected operating condition of the cryo-vessel. If this is not feasible, then calibrate the sensor at atmospheric pressure and use the approximate calibration method to compensate for the shift of the dielectric when the cryogenic liquid is under pressure. For this type of approximate calibration, the *reference liquid* will be the *target liquid* at atmospheric pressure — see page 26 for a detailed discussion of the approximate calibration method. If any questions exist in regard to calibration issues, contact AMI for assistance in determining the optimal calibration strategy.

If higher accuracy is required, please contact an Authorized AMI Technical Representative with your requirements. AMI can supply a self-compensating, capacitance-based, liquid level sensing system (e.g. the Model 187) for applications in cryo-vessels with a wide range of operating conditions, or for applications where increased accuracy over a range of operating conditions is desired. The self-compensating design also possesses the advantage of factory calibration for all cryogens, i.e. no calibration is required of the user for most applications.

Note

All references to "dielectric constant" herein refer to the unitless relative dielectric to ε_0 *(*ε_0 *is the dielectric constant of a vacuum).*

3.2 Calibration Methods

The most straightforward calibration method is the *Open Dewar Calibration* which requires the customer to have access to a filled dewar where the full active length of the sensor can be dipped. The *Closed Dewar Calibration* method can be performed in situations where it is not feasible for the customer to dip the sensor into an open dewar, such as situations where the target liquid is under pressure. The closed dewar calibration is more complex and will require initial preparations to insure success.

Occasionally customers ask AMI to calibrate an instrument and sensor for a liquid which is not available at AMI for calibration purposes and/or for a sensor which is too long to be calibrated at our facilities.

For the case of the target liquid being unavailable, AMI uses liquid nitrogen as the reference liquid and an *Approximate Calibration* is performed using mathematical manipulation of the ratio of the dielectric constants between liquid nitrogen and the desired liquid. This procedure is outlined in the *Approximate Calibration* section beginning on page 26. The technique is intended to provide the instrument with an approximate calibration so that it can be used immediately by the customer. However, the customer is still expected to perform a more accurate calibration where feasible, such as the open dewar or closed dewar calibration, with the target liquid.

For the case where a sensor is too long to be calibrated in AMI facilities, AMI will perform a partial length open dewar calibration in liquid nitrogen, and then calculate the MAX calibration point. A dielectric ratio (i.e. approximate calibration factor) may also be subsequently utilized to adjust for a target liquid other than liquid nitrogen. The customer is expected to perform a more accurate open dewar or closed dewar calibration if feasible.

As a quick guide for selection of the best calibration method available, a calibration selection diagram is presented below. If the instrument and sensor are purchased as a unit from AMI, then the factory calibration will be adequate in most cases. However, for the exceptions noted in the previous paragraphs (which are *approximate* calibrations), the customer should perform a more accurate open dewar or closed dewar calibration if at all possible. A customer-performed calibration is also required for sensors that are purchased as a separate item from the instrument, since the instrument and sensor were not both available for calibration at AMI facilities.

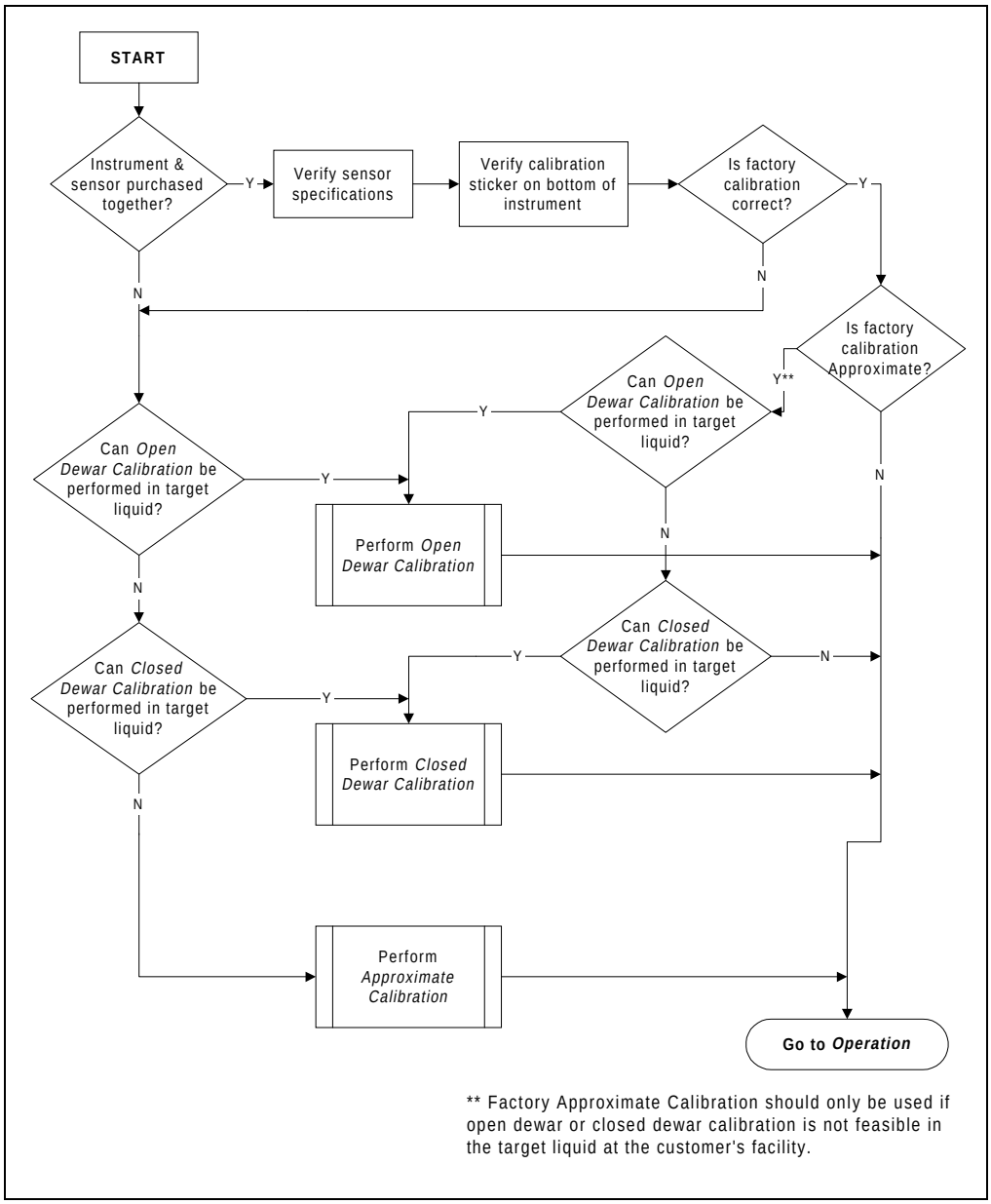

Figure 3-2. Calibration method selection diagram.

3.2.1 Open Dewar Calibration

The instrument should be energized with the sensor connected to the instrument directly or via the oscillator (see the system diagram on page 5), depending upon the selected sensor input. The user should also first review the Calibration Menu Reference section beginning on page 29.

1. Enter the calibration menu by using the passcode, and select the appropriate sensor input to calibrate as documented in paragraph 3.3.2 on page 30.

2. Choose the `Perform` option and select the desired calibration to perform as documented in paragraph 3.3.5.1 on page 33.

3. Enter the appropriate active length value as documented in paragraph 3.3.5.2 on page 33.

4. Place the instrument in the MIN/MAX entry screen as documented in paragraph 3.3.5.3 on page 34.

5. Slowly insert the sensor into the liquid until the level rests approximately one inch below the top sensor hole and then press the MAX button as prompted by the display. When the calibration point has been accepted, the display will change to `Entered` and the Model 286 will beep once. The location of the liquid level on the sensor when the MAX button is pressed becomes the 100% level. The 100% level should always be lower than the upper hole to ensure the instrument will always reach 100% in the event the overall sensor capacitance changes slightly due to component drift, pressure variations, fluid impurities, etc.

6. Slowly withdraw the sensor out of the liquid to be measured until the level is approximately even with the bottom hole in the sensor and then press the MIN button as prompted by the display. When the calibration point has been accepted, the display will change to `Entered` and the Model 286 will beep once. The location of the liquid level on the sensor when the MIN button is pressed becomes the 0% level. This completes the calibration procedure.

   Note

   Having a small amount of liquid in contact with the sensor at the MIN calibration level helps stabilize the sensor capacitance for 0% level indication.

7. Permanently install the sensor in the vessel and proceed to the *Operation* section for directions for configuring the instrument.

3.2.2 Closed Dewar Calibration

A calibration can be performed in a closed dewar system by monitoring the liquid level while transferring the target liquid to an initially empty (or near empty) dewar at a constant rate. In order to insure success with the closed dewar technique, it is necessary to prepare the instrument by presetting the calibration MIN and MAX points outside the estimated level range. If the instrument is not prepared in this manner before the calibration procedure, it is possible to reach the MAX calibration point of the instrument before the target vessel is at the desired maximum level point. If minimum and maximum liquid level indication is available via some other means (e.g. flow calculation, visual determination, point sensors, etc.), then the presetting of the instrument is not necessary.

3.2.2.1 Presetting the MAX/MIN calibration points

The following procedure should be performed before installation of the sensor in the target cryo-vessel.

1. Enter the calibration menu by using the passcode, and select the appropriate sensor input to calibrate as documented in paragraph 3.3.2 on page 30.

2. Choose the `Perform` option and select the desired calibration to perform as documented in paragraph 3.3.5.1 on page 33.

3. Enter the appropriate active length value as documented in paragraph 3.3.5.2 on page 33.

4. Place the instrument in the MIN/MAX entry screen as documented in paragraph 3.3.5.3 on page 34.

5. Connect the extension and oscillator cable to the C or D coaxial sensor input connector on the rear panel of the instrument (see page 5 for a system diagram). If using sensor input A or B, simply connect the sensor cable to the Model 286. ***Do not connect the actual sensor.***

6. Press the MIN button as prompted by the display. When the calibration point has been accepted, the display will change to `Entered` and the Model 286 will beep once.

7. Connect the sensor to the oscillator cable for sensor inputs C or D, or connect the sensor to the single sensor cable for sensor inputs A or B.

8. Press the MAX button as prompted by the display. When the calibration point has been accepted, the display will change to `Entered` and the Model 286 will beep once.

9. Calculate the factor C_{adj} using the following equation:

$$C_{adj} = 120\left[1 + (\varepsilon - 1)\frac{L_{active}}{L_{total}}\right]$$

   where L_{total} is the total sensor length in inches, L_{active} is the active sensor length in inches, and ε is the dielectric constant of the target liquid.

10. Enter C_{adj} into the instrument by placing the instrument in the custom approximate calibration factor entry screen as documented in paragraph 3.3.4.2 on page 31.

    It will be necessary to **ESC** to the sensor input selection screen and choose the `Select` option in order to traverse the calibration menu tree and arrive at the custom approximate calibration factor entry screen. *Ensure that the same calibration used to this point of the presetting procedure is selected for the entry of a custom approximate calibration factor.*

The presetting procedure is complete. The presetting procedure has temporarily calibrated a measurement span that should prevent the fill for a MAX calibration from exceeding a 100% indication from the Model 286. Proceed to the remainder of the closed dewar calibration procedure as presented below.

3.2.2.2 Completing the closed dewar calibration procedure

1. Install the sensor in the dewar and energize the instrument with the sensor appropriately connected to the instrument (see the system diagram on page 5).

2. Again, re-enter the calibration menu by using the passcode if necessary, and select the identical sensor input to calibrate as selected in the presetting procedure.

3. Choose the `Perform` option and select the identical calibration as selected for the presetting procedure.

4. Verify the active length value previously entered in the presetting procedure.

5. Place the instrument in the MIN/MAX entry screen as documented in paragraph 3.3.5.3 on page 34.

6. Connect a strip chart recorder to the 0-10 V recorder output terminals available on the rear panel of the instrument if an analog output option was purchased. If the recorder output is not

available, use the 4-20 mA current loop output or a digital communications option (if installed) to query the instrument for the liquid level at regular time intervals during the fill. If no remote monitoring or communication option is installed, the level display must be manually plotted vs. time during the fill.

7. Commence filling the dewar. While the sensor is cooling down, there may be a slow drift in the displayed liquid level. However, when the liquid actually touches the bottom of the sensor, contact with the liquid surface may become apparent by virtue of more random and frequent fluctuations in the displayed liquid level. The liquid level trace will also start to show an increasing profile with positive slope.

   Once the indications of the contact between the sensor and liquid become readily apparent, press the MIN button as prompted by the display. When the calibration point has been accepted, the display will change to `Entered` and the Model 286 will beep once. This point is the 0% level of the sensor.

   Note

   If the sensor is installed in the dewar with some small amount of liquid already in contact with the sensor, then the final MIN calibration point can be set before filling begins but after any thermally induced fluctuations in the observed output have diminished. However, note that the measured span of the liquid level is reduced by the initial level of liquid in contact with the sensor.

8. Continue the transfer while observing the liquid level trace on the strip chart recorder, computer display, or manual plot, whose slope is proportional to the transfer rate. The slope of the liquid level trace should decrease significantly when the liquid reaches the hole in the top of the sensor.

   When the break in the slope of the level trace occurs (i.e. the slope of the level trace becomes 0 or horizontal), push the MAX button as prompted by the display. When the calibration point has been accepted, the display will change to `Entered` and the Model 286 will beep once. The level on the sensor when the MAX button is pressed becomes the 100% level.

   Note

   If the instrument displayed a 100% reading before a break is observed in the slope of the level trace, then the MAX calibration point set prior to the current procedure has interfered. If this occurs, the customer has two options: 1) stop the procedure, increase the

value entered for C_{adj} (see steps 4 and 5 of the presetting procedure) until the current liquid level display falls below 100%, and then continue the procedure; or 2) continue the liquid transfer until the liquid level is determined to be 100% by means other than feedback from the instrument and then pressing the MAX calibration push-button.

9. Once the MAX calibration point has been successfully entered, return to the approximate calibration factor screen, as documented in paragraph 3.3.4.2 on page 31, and select None from the list of options.

10. To achieve a standard calibration of the sensor with the active region located from the lower hole to one inch below the upper hole, use the level data from the instrument to recalibrate the MAX point when the percent level corresponds to one inch below the upper hole. Use the following equation to determine the percent level at which to reset the MAX calibration point:

$$MAX_{percent} = 100 - 100\left[\frac{1}{L_{hole-to-hole}}\right]$$

where $L_{hole\text{-}to\text{-}hole}$ is the measured length from the bottom hole of the sensor to the uppermost hole of the sensor in inches. This technique can be used assuming the sensor was built as a standard sensor. If the sensor was made in a custom configuration, refer to the sensor documentation and/or drawing, or contact AMI.

<u>Example</u>: 20" active length sensor:

When the sensor is calibrated by the closed dewar procedure, the actual length of calibration will be 21" (distance between the bottom and top holes in the sensor). When the liquid is 1" below the upper hole, the display will show 95.2% [e.g. 100% – (1"/21" x 100%)]. When the liquid level reaches this point during usage, push the MAX button. The instrument and sensor are now calibrated with a standard active region of 20". The active length setting of the instrument should also be configured for 20".

11. Proceed to the *Operation* section for directions for configuring the instrument.

3.2.3 Approximate Calibration

This procedure is the least accurate form of calibration and should be used only when the aforementioned calibration procedures are not possible. The approximate calibration method can be used in cases where the sensor cannot be dipped into the target liquid, the full active length of the sensor cannot be dipped into an open dewar, or both. Approximate calibration may also be useful for situations where the sensor cannot be dipped into the target liquid under the expected operating pressure.

If the target liquid is not available for dipping, a substitute *non-conducting* reference liquid can be used. If the full length of the sensor cannot be dipped, then a partial length dip can be performed. If both situations are encountered, then a partial length dip can be performed in a substitute reference liquid.

1. Enter the calibration menu by using the passcode, and select the appropriate sensor input to calibrate as documented in paragraph 3.3.2 on page 30.

2. Choose the `Perform` option and select the desired calibration to perform as documented in paragraph 3.3.5.1 on page 33.

3. Enter the appropriate active length value as documented in paragraph 3.3.5.2 on page 33.

4. Place the instrument in the MIN/MAX entry screen as documented in paragraph 3.3.5.3 on page 34.

5. First, cool the sensor as much as possible by dipping the sensor as far as possible in the available reference liquid.

6. Slowly withdraw the sensor out of the reference liquid until the level is approximately even with the bottom hole in the sensor and then press the MIN button as prompted by the display. When the calibration point has been accepted, the display will change to `Entered` and the Model 286 will beep once. The location of the liquid level on the sensor when the MIN button is pressed becomes the 0% level.

   Note

   Having a small amount of liquid in contact with the sensor at the MIN calibration level helps stabilize the sensor capacitance for 0% level indication.

7. Reinsert the sensor in the reference liquid as far as possible, but not exceeding 1" below the top hole. Note the physical location of the liquid level on the sensor at the maximum insertion depth.

While the sensor is submerged at the maximum depth, press the MAX button as prompted by the display. When the calibration point has been accepted, the display will change to `Entered` and the Model 286 will beep once.

8. Measure the distance between the bottom hole of the sensor and the location of the liquid level noted during step 7. This measured length is L_{dipped}.

9. The dielectric constant for the reference liquid, ε_1, and the target liquid, ε_2, must be known to complete the approximate calibration. These values must be placed in the equation:

$$\text{Approximate Calibration Factor} = \left[\frac{\varepsilon_2 - 1}{\varepsilon_1 - 1} \times 100\right]\frac{L_{active}}{L_{dipped}}$$

where L_{dipped} is the length of the sensor dipped in the reference liquid and L_{active} is the active sensor length.

Note

If the target liquid is available for dipping (i.e. the reference liquid and target liquid are the same), then the dielectric ratio, $(\varepsilon_2-1)/(\varepsilon_1-1)$, *becomes* 1. *If the full active length of the sensor can be dipped, then the length ratio,* L_{active} / L_{dipped}, *becomes* 1.

Note that ε_1 = 1.4336 for saturated liquid nitrogen at atmospheric pressure[1]. Dielectric constants for several liquids are provided in the *Appendix*. The dielectric constant varies with temperature and pressure, therefore for best accuracy use the dielectric constant for the target liquid at the equilibrium temperature and pressure maintained in the containing vessel.

10. Once the approximate calibration factor is calculated, it can be entered into the instrument by placing the instrument in the custom approximate calibration factor entry screen as documented in paragraph 3.3.4.2 on page 31.

It will be necessary to **ESC** to the sensor input selection screen and choose the `Select` option in order to traverse the calibration menu tree and arrive at the custom approximate calibration factor entry screen. *Ensure that the same calibration used to this point of the procedure is selected for the entry of a custom approximate calibration factor.*

1. Data from NIST Database 12.

The Model 286 also provides preset approximate calibration factors for common cryogens relative to liquid nitrogen, with both at atmospheric pressure. The preset values may be selected in lieu of entering a custom factor if the full active length of the sensor is dipped ($L_{dipped} = L_{active}$).

Note

In contrast to the AMI Model 185/186 instruments, the approximate calibration factor is retained in the Model 286 memory. Therefore, the approximate calibration factor can be adjusted as desired at any time without modifying the base MIN/MAX calibration.

Example: Purchased a 100" active length sensor for operation in liquid argon at atmospheric pressure, however only liquid nitrogen is available for calibration at a maximum depth of 30":

First, the sensor is dipped as far as possible into the liquid nitrogen and cooled. The MIN point is then set as outlined in step 6. The MAX point is set as outlined in step 7 while the sensor is submerged 30" in liquid nitrogen. The dielectric constant for liquid nitrogen is 1.4336 and for liquid argon is 1.53. Substituting all values into the approximate calibration factor equation yields:

$$\text{Approximate Calibration Factor} = \left[\frac{1.53-1}{1.4336-1} \times 100\right]\frac{100}{30} = 407.4$$

A value of 407.4 would be entered as a *custom* approximate calibration factor as outlined in steps 6 and 7. The sensor is now *approximately* calibrated for 100" active length operation in liquid argon at 1 atm.

11. The sensor can now be installed in the dewar containing the target liquid. The approximate calibration can be used until an open dewar or closed dewar calibration can be performed with the target liquid if possible.

12. Proceed to the *Operation* section for directions for configuring the instrument.

3.3 Calibration Menu Reference

The CAL menu provides screens for calibrating the four sensor inputs. It is important to understand that a calibration is fixed to a sensor input, regardless of how the sensor inputs are assigned to the four channels.

Each sensor input can have up to four independent calibrations. Each of the four calibrations may have independent values assigned for the active length, MIN/MAX calibration points, approximate calibration factor, and zero offset.

> **Note**
>
> *Do not confuse the four independent calibrations for each sensor input with the four assignable channels of the instrument.*

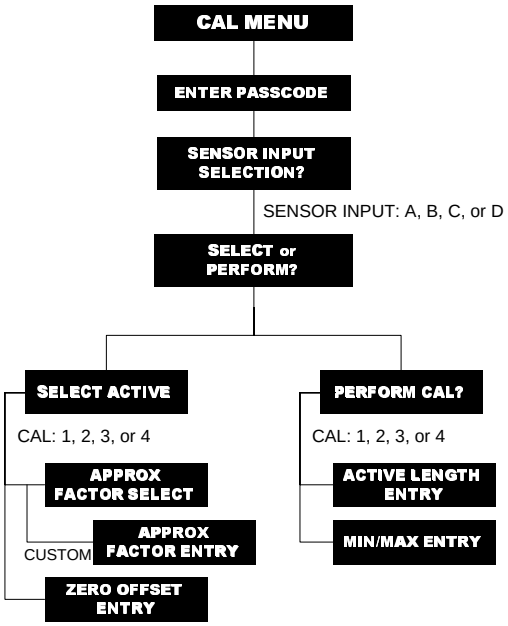

It is the responsibility of the end user to maintain accurate records of the sensor inputs and calibrations. For maximum accuracy, the various connecting components such as the cables, oscillator, and sensor should be considered a matched set. The oscillator, oscillator cable length, and sensor represent the most significant sources of variability and must be matched for a specific calibration.

A tree diagram of the CAL menu is provided at left. Before a calibration can be selected, at least one calibration for the sensor input must be performed. Once a calibration is performed (i.e. it contains an active length setting and valid MIN and MAX calibration points), the “Select Active” menu tree becomes available for specifying approximate calibration and zero offset factors. The select menu tree is also used to select an active calibration if more than one calibration is available for a specific sensor input.

3.3.1 CAL Menu and Passcode Entry

The CAL menu is accessed by pressing the **CAL** key in the default display mode (see the *Operations* section for an introduction to keying data). The CAL menu first requires that the user enter the 4-digit calibration passcode recorded in the first page of this manual. Key in the calibration passcode and press **ENTER**. Note that the passcode is not displayed during entry, but asterisks (*) are displayed indicating entry of each digit as illustrated below.

```
Enter Passcode:
****_
```

Note

All measurements continue when the CAL menu has been entered (including the passcode entry screen). Selections of an option within menus, such as the active calibration, are immediately valid and will impact operation.

After the correct passcode is entered and the **ENTER** key is pressed, the CAL menu tree will be available to the user. Each menu item is discussed in the following paragraphs.

3.3.2 Sensor Input Selection

```
Input?
►A   B   C   D
```

The sensor input selection menu allows the operator to choose the desired sensor input for calibration. The selected sensor input then applies to all subsequent menus in the calibration menu tree. The selected sensor input will also be displayed in all subsequent calibration menus. Use the **OPTION** key to move the cursor. Use the **MENU** key to proceed to the next menu.

3.3.3 Action for Selected Input

```
Cal for Input A?
*Select ►Perform
```

The action menu chooses between *selection* of a previously performed calibration, or actually *performing* a calibration. At least one calibration must be performed for the selected sensor input before the `Select` option is available. Use the **OPTION** key to cycle between menu options. Use the **MENU** key to proceed to either the “select” or “perform” sub-menus.

3.3.4 Select Calibration Sub-Menu

If the `Select` option is chosen as documented in paragraph 3.3.3, then the operator is presented with the following menu selections. The **ESC** key can be used at any point to exit the sub-menu.

3.3.4.1 Select active calibration

```
A: Select Active
►1*  2*  3   4
```

The select active calibration menu allows the operator to select one of up to four previously performed calibrations as the "active" calibration. The active calibration is used for all measurements for the given sensor input. The asterisk * in the display indicates that a calibration has previously been performed and is available for selection as active. Use the **OPTION** key to move the cursor. *Selections are valid immediately* and will affect level measurements for the channel assigned to the sensor input. Use the **MENU** key to continue.

3.3.4.2 Approximate calibration factor

```
A: Approx Factor
►None  LH2  LOX
```

The approximate calibration selection menu provides options for transforming a calibration in liquid nitrogen to any of four common liquefied gases under saturated conditions at 1 atm. The approximate calibration factor is a ratiometric value that relates the dielectric of the liquid used to perform the actual calibration to another liquid (or the same liquid under different conditions) for level monitoring/control. The actual values used for the approximate factors are listed in Table 3-1 below.

Table 3-1. Pre-defined approximate calibration factors for common cryogens at 1 atm relative to LN_2.

Cryogen	Factor[a]
Para-Hydrogen (LH_2)	53.00
Oxygen (LOX)	112.3
Argon (Ar)	122
Natural Gas[b] (LNG)	144.5

a. From NIST Database 12 for saturated liquids at 1 atm.
b. 100% liquefied methane assumed for LNG.

The intent of the approximate calibration factor is to provide the operator with a method to transform calibrations performed in an inexpensive and relatively safe liquid (such as liquid nitrogen) to a more expensive or hazardous liquid (such as liquid hydrogen). It is also useful for transforming partial length calibrations to the full active length for extremely long sensors.

If the `None` option is selected, then no ratiometric transformation is applied to the MIN/MAX calibration points.

If the `Custom` approximation calibration factor option is selected, the operator may enter a calculated approximate calibration factor as documented in the "Approximate Calibration" procedure beginning on page 26. The approximate calibration factor is limited to a range of 10% to 1000%. If the entered approximate calibration factor is within the valid range, but results in an overflow of the measuring circuits within the Model 286, then the instrument will beep once and revert to the previous value.

```
A: Approx Factor
  100%
```

Note

Approximate calibration factors must be entered in percent units, since it is a unitless ratiometric value. The **UNITS** *key is inactive within the menu.*

After selection of a preset factor or entry of a custom approximate calibration factor, use the **MENU** key to continue.

3.3.4.3 Zero offset factor

```
A: Zero Offset
    0.0 %
```

The zero offset entry allows the operator to enter an offset value in percentage of the calibrated span. For example, if a value of –10% is entered, then a calibrated level of 0.0% (or the MIN point) will display as +10.0% during level measurements. A calibrated level of +90% would display as +100.0%.

Note

Use the OPTION key to toggle the sign for the zero offset. Zero offsets must be entered in percent units. The **UNITS** *key is inactive within the menu.*

The allowable range for the offset value is –100% to 100%. If the entered offset value is within the allowable range, but results in an overflow of the measuring circuits within the Model 286, then the instrument will beep once and revert to the previous value. The zero offset value allows the operator to nullify the effects of any *constant value* of stray capacitance that may be present in the system. Sources of constant-valued capacitance might, for example, include different length oscillator cables.

Use the **MENU** or **ESC** key to return to the sensor input selection menu.

3.3.5 Perform Calibration Sub-Menu

If the `Select` option is chosen as documented in paragraph 3.3.3, then the operator is presented with the following menu selections. The **ESC** key can be used at any point to exit the sub-menu.

3.3.5.1 Select calibration to perform

```
A: Perform Cal?
 1*  2* ►3   4
```

The operator must select which calibration of the four available is desired. The asterisk * in the display indicates that a calibration has previously been performed. By default, as the menu is entered, the next open calibration will be selected. Use the **OPTION** key to cycle the cursor. It is allowable to re-calibrate a previously performed calibration. After selection, use the **MENU** key to continue.

3.3.5.2 Active length entry

```
A: Active Length
  <No entry>
```

Note

The active length adjustment can only be performed in the inches or centimeter units modes. If the menu is entered in percent units mode, the Model 286 will automatically change the units to cm. Toggle the units key before beginning entry (or after **ESC** *from an entry in progress) to toggle the units.*

The active length *must be entered*. The active length corresponds to the physical distance measured between the desired MIN and MAX points of the sensor.

Note

The active length value should be set to the length which is to be physically calibrated in the Open or Closed Dewar Calibration method, or the L_{active} value used for the Approximate Calibration method calculations as documented in paragraph 3.2.3 on page 26.

Once a value has been entered using the **ENTER** key, press the **MENU** key to proceed. *If a value has not been entered, the Model 286 will not allow the user to proceed to the next calibration step.*

Note

The active length setting can be re-adjusted after MIN/MAX entry without affecting the MIN/MAX calibration of the instrument.

3.3.5.3 MIN/MAX entry

```
A: MIN - Press 7
   MAX - Press 8
```

Before entering the MIN or MAX points, the operator should ensure that the sensor is properly connected to the Model 286, and that the cabling configuration is as close as possible to the configuration used during operation (with the exception of the extension cable). The sensor should also be cooled to near the operating temperature to mitigate the effects of any mechanical distortions that may arise between room temperature and cryogenic temperature.

Note

The MIN and MAX entry can be performed in any order, and can be performed multiple times. The only requirement is that at least one MIN and one MAX calibration must be performed to permit the instrument to make a measurement.

Note

If the instrument beeps twice, then either the just entered MIN point is greater than a previously entered MAX point, or vice-versa. In that event, the Model 286 invalidates the previously entered point and it must be re-entered. The capacitance of the MAX point must be greater than the MIN point in order to perform level measurements.

The **MIN** point corresponds to the 0% level and minimum capacitance. Press **7** to initiate the MIN measurement. The instrument will emit a short beep if the attempt is successful and the display will change to `Entered`.

The **MAX** point corresponds to the 100% level and maximum capacitance. Press **8** to initiate the MAX measurement. The instrument will emit a short beep if the attempt is successful and the display will change to Entered.

Press the **ESC** key to exit the perform sub-menu once the MIN and MAX measurements have been entered. Proceed to the *Operations* section to configure the remaining instrument functions.

4 Operation

4.1 Operational Guidelines

This section describes the front panel display and keypad functions for the Model 286. In addition to the front panel operation, the remote communication port provides methods for performing the identical operations and acquiring the current state of the instrument. Refer to the *Remote Interface* section beginning on page 57 for more details regarding the communication functions.

The Model 286 provides up to four level measurement *channels*, designated as **1 through 4**. The channels may be assigned to any *sensor input*. The sensor inputs are designated as **A through D**. Please note that the calibrations are fixed to the sensor input, regardless of how the sensor inputs are assigned to the channels.

Channels 1 and 2, and the associated switched AC outputs 1 and 2, of the Model 286 provide the ability to operate in one of three level-control *modes*: normal, auto-changeover, or pre-cool.

Channels 3 and 4 do not provide level-control functions, but do provide the ability to measure liquid level, activate HI, LO, and RATE alarms, and optionally HI and LO relay contacts available from the rear panel.

4.1.1 Energize the Instrument

After completion of the *Installation* and *Calibration* (if necessary) procedures, energize the instrument by placing the power switch in the POWER [**I**] position. The backlit LCD display will briefly display the instrument name and ROM revision, and all LEDs will be energized. The Model 286 will then begin level and usage measurements and update the default display as illustrated below:

```
►Ch 1:  100.0 %
 Ch 2:   75.0 %
```

Figure 4-1. Default display showing levels for Channels 1 and 2 (in percent).

Press the **OPTION** key in the default display to move the cursor ► and select any of the four independent channels. While the default display is active, press the **MENU** key to show the usage rate for the selected channel. Press the **MENU** key again to return to the multi-channel display.

For a selected channel, in order to access the various menus for setting the alarms, setpoints, fill mode, etc. press a key while the default display is visible. Pressing a key while the default display is visible activates the associated menu display. For example, pressing the **HI** key while the default display is visible enters the HI menu. Press the **ESC** key to exit a menu and return to the default display.

For more information regarding the default display modes, entering menus, exiting menus, entering numerical values, and selecting menu options, refer to the *Menu Reference* section beginning on page 43.

> **Note**
>
> *If the displayed level reading is below the LO alarm level, exceeds the HI alarm level, or the usage rate exceeds the RATE alarm, an audible alarm will sound continuously. To silence the alarms, see the alarm muting menu description on page 54.*

4.1.2 Assign Sensor Inputs to the Channels

Use the **ASN** key to enter the assign menu. The assign menu provides for the assignment of a sensor input to a selected channel. When a sensor input is assigned to a channel, the active calibration for that sensor input is then immediately applied to the level measurements for that channel. It is possible to assign a null input to a channel. See paragraph 4.3.10 on page 53 for more details regarding the assign menu.

> **Note**
>
> *If a sensor(s) was purchased with the Model 286, AMI will typically perform a calibration and make the appropriate sensor input-to-channel assignments at the factory.*

4.1.3 Select the Appropriate Units

Repeatedly press the **UNITS** key to cycle between display units of percent, inches, or centimeters. The level reading displays the length, or percentage of the active sensor length, above the MIN calibration point (ignoring any zero offset setting) that is immersed in liquid.

The selected units may be changed at any time except during the process of entering a numerical value.

4.1.4 Configure the HI and LO Alarms

To adjust the HI and LO alarm levels for the selected channel, use the HI and LO menus accessible by using the **HI** and **LO** keys, respectively. The setpoints may be located anywhere between 0% to 100% of the measured span, with the limitation that the HI alarm must be greater than the LO alarm. The HI and LO alarm adjustments are compatible with all three units modes.

a. When the measured liquid level exceeds the HI alarm, the HI/LO LED on the front panel is energized *amber* and a set of HI alarm contacts are closed on the J5A or J5B connectors on the rear panel (see the *Appendix* for the pinout). When the level reaches or falls below the HI alarm, the LED is extinguished and the relay contacts open.

b. When the measured liquid level falls below the LO setpoint, the HI/LO LED on the front panel is energized *red* and a set of LO alarm contacts are closed on the J5A or J5B connectors on the rear panel (see the *Appendix* for the pinout). When the level reaches or exceeds the LO setpoint, the LED is extinguished and the contacts open.

See the **ASN** menu description on page 53 for details regarding the assignment of the alarm contacts to the channels.

Note

The HI setpoint for a given channel must always be above the LO setpoint. The firmware does not allow these setpoints to be reversed. Both setpoints may be set from 0% to 100% as long as HI > LO.

Note

The HI and LO contacts are both closed on power-off of the instrument, which is a state unique to the power-off condition.

Note

If the active length setting for the selected calibration is adjusted subsequent to configuring the various alarm levels, the percentage of the length will be maintained for all alarms. For example, if the active length is set to 100 cm and the HI alarm is set to 80 cm, then adjusting the active length to 150 cm will result in the HI alarm being automatically scaled to 120 cm—i.e., the setting of 80% of the active length is maintained.

4.1.5 Configure the A SETPOINT and the B SETPOINT

Ch 1 & 2

To adjust the A and B setpoints (for Channels 1 or 2 only) which specify the upper and lower limits for the liquid level control band, use the A and B menus accessible by using the **A** and **B** keys, respectively. The setpoints may be located anywhere between 0% to 100% of the measured span, with the limitation that the A setpoint must be greater than the B setpoint. The A and B setpoint adjustments are compatible with all three unit selections (%, in, or cm).

a. When the measured liquid level falls below the B setpoint, if the AC output is configured for AUTO operation, an *auto-fill cycle* will initiate and the respective AC output will be energized.

b. When the measured liquid level reaches or exceeds the A setpoint, if the AC output is configured for AUTO operation, the auto-fill cycle will terminate and the AC output will be de-energized.

Note

The A setpoint must always be above the B setpoint for a given channel. The firmware does not allow these setpoints to be reversed. Both setpoints may be set from 0% to 100% as long as A > B.

Note

Do not confuse the A and B setpoints with the sensor inputs also labeled A and B.

4.1.6 Select the Controller Mode

Review the available controller modes of the Model 286 as introduced in paragraph 1.5 on page 7. The controller mode is selected by pressing the **MODE** key and using the **OPTION** key to cycle through the options.

If the *normal* mode is selected, then the AC outputs are assigned independent auto-fill functions for Channels 1 and 2. The respective FILL menu for each channel will provide AC output controls for each fill valve.

If the *auto-changeover* or *pre-cool* modes are selected, then the AC outputs are both assigned to Channel 1. Channel 2 becomes unavailable. In this case, the FILL menu for Channel 1 provides menus for controlling both AC outputs.

4.1.6.1 AC output control

Ch 1 & 2

The operation of the AC output receptacles of the instrument is controlled by the fill menu settings. Operation of the fill menu selections is as follows unless otherwise noted:

a. **OFF:** With the instrument power on and with OFF selected in the FILL menu, the instrument serves as only a level monitor, giving a level reading on the digital display and providing data via any analog or communication options installed. All setpoint LEDs (and associated J5A or J5B alarm contacts) operate normally, however, the associated AC output for the channel on the rear panel will *always* be de-energized.

b. **ON:** With ON selected in the FILL menu, the rear panel AC output for the channel will become energized, thereby initiating flow if the solenoid-operated fill valve is properly connected. The FILL LED on the front panel will energize, indicating the presence of power at the rear panel receptacle. **The operator is solely responsible for terminating the fill flow.**

c. **AUTO:** With AUTO selected in the FILL menu, the Model 286 is capable of automatically initiating and terminating liquid fill via the control valve(s), thereby maintaining the level between the selected A and B setpoints. If the liquid level falls below the B setpoint, the appropriate rear panel AC output and front panel FILL LED are energized. When the liquid level subsequently reaches or exceeds the A setpoint, the AC output is de-energized and the FILL LED is extinguished.

Note

When ON is selected and a valve is connected to the AC output, the valve is actuated immediately. If this is not desired, then disconnect the valve from the output before changing the fill state.

4.1.6.2 Fill timeout

Ch 1 & 2

The various FILL menus provide a fill timeout feature to help alleviate the possibility of liquid overflow. See paragraph 4.3.7 on page 46 for details of the FILL menu screens for the various controller modes.

The fill timeout feature is enabled when the instrument is operated in the AUTO mode with a fill timeout setting greater than zero. Once the liquid level falls below the B setpoint, an internal fill timer (whose period is the timeout setting) begins to increment. If the liquid level does not reach the A setpoint before the timeout period expires, the FILL LED will begin blinking and power to the associated rear panel AC output will be interrupted. To reset this function the fill mode must be momentarily changed to the ON or OFF state via the keypad or remote interface, or power to the instrument must be cycled.

Note

The fill timeout function is disabled when the timeout setting is zero, i.e. the Model 286 will continue to fill the target vessel indefinitely until the A setpoint is achieved. Adjusting the fill timeout setting to zero, while an AUTO fill is in progress, will also terminate any in-progress functions of the timer.

The instrument is typically shipped from the factory with a zero setting for the fill timeouts.

4.2 Sensor Contamination

To ensure proper instrument calibration and operation, care must be taken to ensure the sensor is kept free of contaminants and not subjected to any force which would physically distort the sensor. Water or other electrically conducting substances in the sensor will disturb the measured capacitance and the instrument's response. Physically distorting the sensor in any way will also cause abnormal instrument operation by introducing variations in the sensor capacitance not due to liquid level. The absolute calibration of the instrument can be inaccurate if care is not taken to ensure the sensor is in the proper environment.

Cold sensors exposed to humidified air can show erroneous high level readings because the air contains moisture that can condense between the cold sensing tubes. A minute film of water can cause a shorted or partially shorted condition, which results in false level readings. As the sensor warms, the moisture may evaporate and the sensor will again read correctly. This is a physical phenomenon and does not indicate any problem with your AMI level equipment. Limit or eliminate exposure of cold sensors to humidified air to avoid this condition.

If a sensor should require cleaning, flushing with alcohol is recommended. The sensor cannot be used again until all the alcohol has been evaporated. Under no circumstances should the sensor be disassembled.

4.3 Menu Reference

The two types of default displays are illustrated in Figures 4-2 and 4-3 below. The default displays provide: 1) the level measurement in the selected units for each pair of channels, *or* 2) the level measurement and a usage estimate in the selected units per minute for the *selected channel*. Use the **MENU** key to toggle between the two types of default displays. Use the **OPTION** key to cycle the channel selection. The cursor ▶ indicates the currently selected channel.

```
▶Ch 1:   50.0 %
 Ch 2:   80.0 %
```

Figure 4-2. Default display showing level (in %) for Channels 1 and 2 (Channel 1 is selected).

If the usage rate default display is selected (i.e. the second type), the arrow displayed to the right of the usage estimate indicates the usage trend as shown below.

```
▶Ch 3:   50.0 %
Δ/min:    1.5 ↑
```

Figure 4-3. Default display showing level (in %) and usage (% per minute) for the selected Channel 3.

For the remainder of this discussion, Channel 1 selection will be used in illustrating the various menus where channel selection is applicable.

4.3.1 Accessing Menus

Menus are accessed by pressing the appropriate key while the default display is visible. Once a menu is entered, the numerical keys will enter the associated number into the display. Use the **ESC** key (while no numerical entry is in progress) to exit a menu and return to the default display.

For example, if the **1•HI** key is pressed while the default display is visible, the HI menu is displayed. Pressing the **1•HI** key in the HI menu results in a numerical entry of the “1” digit.

Some menus have multiple screens associated with the function. To move to the next menu, press the **MENU** key. Repeatedly pressing the **MENU** key will cycle through all the menu screens associated with the function.

4.3.1.1 Entering Numerical Values

A common method of entering values is used within menus requiring numerical entries. Once a menu is selected, the user starts an entry by pressing a digit or the decimal key. The display will begin a new entry and display a cursor _ as a prompt for the next digit or decimal entry. To accept the entered value, press the **ENTER** key. Values are *not* applied to the operation of the instrument until the **ENTER** key is pressed and the cursor prompt disappears from the display. An example of an entry in progress is illustrated below:

```
►Ch 1:   50.0 %
   Hi: 82_
```

If the **ESC** key is pressed *once* while entry is initiated, the entered digits will be cleared and the cursor will remain for reentry of a new desired value. If the **ESC** key is depressed *twice*, the setting will revert to the previous value and the entry is cancelled.

4.3.1.2 Menu Option Selection

Some menus may require the user to cycle through and select from a list of predefined options. Such menus will display the cursor ► which indicates that a list of predefined options are available from which to select. Pressing the **OPTION** key moves the cursor forward within the list. The value to which the cursor points is the specified setting and is effective *immediately* upon selection.

4.3.1.3 Exiting Menus

Menus are exited by pressing the **ESC** key while no numerical entry is in progress. The display will revert to the default display (see paragraph 4.3 above).

4.3.2 HI Menu

```
►Ch 1:   50.0 %
   Hi:   90.0 %
```

Accessible by pressing the **HI** key. The “HI” menu adjusts the HI alarm level in the selected units. When the measured liquid level exceeds the HI alarm, the HI/LO LED on the front panel is energized amber (Channels 1 and 2 only) and a set of alarm contacts are closed on the 9-pin D-sub J5A and J5B connectors on the rear panel (see the *Appendix* for the pinout). The audible alarm

will also sound if enabled. When the level reaches or falls below the HI alarm, the LED is extinguished and the alarm contacts open.

The HI alarm may be set between 0.1% to 100.0%, and must be greater than the LO alarm. The default setting is 90.0%. Setting the HI alarm to 100% effectively disables the alarm and all associated LED indication and alarm contacts.

4.3.3 LO Menu

```
►Ch 1:   50.0 %
   Lo:   20.0 %
```

Accessible by pressing the **LO** key. The “LO” menu adjusts the LO alarm level in the selected units. When the measured liquid level falls below the LO setpoint, the HI/LO LED on the front panel is energized red (Channels 1 and 2 only) and a set of alarm contacts are closed on the 9-pin D-sub J5A or J5B connectors on the rear panel (see the *Appendix* for the pinout). The audible alarm will also sound if enabled. When the level reaches or exceeds the LO setpoint, the LED is extinguished and the contacts open.

The LO alarm may be set between 0.0% to 99.9%, and must be greater than the HI alarm. The default setting is 20.0%. Setting the LO alarm to 0% effectively disables the alarm and all associated LED indication and alarm contacts.

4.3.4 A Menu

```
►Ch 1:   50.0 %
    A:   60.0 %
```

Ch 1 & 2

Accessible by pressing the **A** key. The “A” menu adjusts the A setpoint level in the selected units, which defines the upper limit of the automatic fill function control band. If the FILL mode is set to AUTO, the A setpoint functions as the upper limit of a fill cycle.

The A setpoint may be set between 0.0% to 100.0%, but must be greater than the B setpoint. The default setting is 60.0%.

4.3.5 B Menu

```
►Ch 1:   50.0 %
    B:   40.0 %
```

Ch 1 & 2

Accessible by pressing the **B** key. The “B” menu adjusts the B setpoint level in the selected units, which defines the lower limit of the automatic fill function control band. If the FILL mode is set to AUTO, the B setpoint functions as the lower limit of the level control band, and thereby initiates a fill cycle when the level falls below the setpoint.

The B setpoint may be set between 0.0% to 100.0%, but must be less than the A setpoint. The default setting is 40.0%.

Note

Setting B to 0.0% will prevent initiation of an autofill cycle.

4.3.6 RATE Menu

```
►Ch 1:   50.0 %
 Rate:  10.0/min
```

Accessible by pressing the **RATE** key. The RATE menu adjusts the RATE alarm in the selected units per minute. The RATE alarm applies to both fill and loss usage estimates. If the absolute value of the usage estimate exceeds the RATE alarm limit, then an alarm symbol appears to the right of the usage estimate in the default display and the audible alarm sounds if enabled.

The RATE alarm may be set up to 9,999.9% per minute. A value of zero disables the RATE alarm for the associated channel. The default value is zero.

4.3.7 FILL Menu in Normal Mode

Ch 1 & 2

The FILL menu is accessible by pressing the **FILL** key. The FILL menu, if the instrument is in the normal controller mode, provides three menu screens for the selected channel, accessible by pressing the **MENU** key, for setting the fill mode, fill timeout, and fill inhibit.

4.3.7.1 Fill Mode

```
Ch 1: Fill Mode
On   Off  ►Auto
```

This menu provides three options for the fill mode of the Model 286. Press the **OPTION** key to cycle between the three selections. The associated FILL LED for the selected channel indicates the energized or de-energized state of the AC output.

On:	Energizes the AC output receptacle.
Off:	De-energizes the AC output receptacle.
Auto:	Allows the Model 286 to perform the automatic fill function based on the A & B control band settings.

4.3.7.2 Fill Time

```
Ch 1: Fill Time
  60.0 min
```

This menu adjusts the fill timeout setting for the AUTO fill mode. If the A setpoint is not achieved within this period, the AC output is de-energized and the associated FILL LED blinks. Setting the fill timeout to zero allows the AUTO fill mode function to continue the fill operation indefinitely until the A setpoint is achieved.

The fill timeout may be set to up to 9,999.9 minutes. The default setting is 0.0 minutes (i.e. no timeout).

Note

In order to reset the fill timer after expiration, the fill mode must be set to either ON or OFF via the keypad or remote interface, or the power to the instrument must be cycled.

4.3.7.3 Fill Inhibit

```
Ch 1: Inhibit
Contact  ►None
```

If the `Contact` option is selected, then the associated contact input (see the *Appendix* for connector diagrams) will function as a fill cycle inhibit when a remote contact is opened. Any in-process fill cycle will also be terminated in the event the remote contact is

opened, and will be re-initiated on contact closure. This option is useful for applications where critical operations may require minimum external disturbances.

If the None option is selected, the contact input will be ignored and the fill cycle will initiate and terminate normally. The default selection is None.

4.3.8 FILL Menu in Auto-Changeover Mode

In the auto-changeover controller mode, the FILL menu provides four menu screens for Channel 1. Each of the menu screens is accessible by repeatedly pressing the **MENU** key, and include interfaces for setting the AC output states, selecting the empty detection method, and setting timeouts. The auto-changeover mode manages auto-fill cycles[1] from two storage vessels.

4.3.8.1 AC Output 1

```
AC Output 1:
 On   Off  ►Auto
```

Controls the state of AC Output 1. Press the **OPTION** key to cycle between the three selections. The 1:FILL LED indicates the energized or de-energized state. The Auto selection allows the Model 286 to manage the auto-fill cycles between the two storage vessels.

4.3.8.2 AC Output 2

```
AC Output 2:
 On   Off  ►Auto
```

Controls the state of AC Output 2. Press the **OPTION** key to cycle between the three selections. The 2:FILL LED indicates the energized or de-energized state. The Auto selection allows the Model 286 to manage the auto-fill cycles between the two storage vessels.

1. An “auto-fill cycle” in the auto-changeover mode is initiated by a liquid level less than the B setpoint of Channel 1, and is terminated once the liquid level reaches or exceeds the A setpoint of Channel 1.

4.3.8.3 Empty Detection

```
Empty Detection:
 Use? ►Timeout
```

```
Empty Detection:
 Use? ►Contacts
```

The empty detection menu allows the user to specify whether simple timeouts or the remote contact senses will be used to determine the availability of liquid from each storage vessel.

If the `Timeout` option is selected, the Model 286 will use the changeover time as the maximum amount of time allowed for an auto-fill cycle to complete. If the auto-fill cycle does not complete within the changeover time, the fill expires and the respective front panel FILL LED blinks, and an attempt is made to complete the auto-fill cycle from the other storage vessel. If *both* vessels are in a timeout condition, no auto-fill cycle is possible.

If the `Contacts` option is selected, the Model 286 uses the remote contact senses available in connectors J5A and J5B (see page 98 for the pinout). The remote contact sense of J5A is used for AC Output 1, and the remote contact sense of J5B is used for AC Output 2. If the respective remote contact is closed, the associated storage vessel is assumed to contain liquid. Note that if a contact sense is disconnected, this appears as an “open” remote contact and will preclude fill from the associated storage vessel.

The user may also optionally define a fill timeout that can be used as fail-safe indicator if the contacts method of empty detection is selected.

4.3.8.4 Changeover Time

```
Changeover Time:
   10.0 min
```

If the *timeout* method of empty detection is selected, then a changeover time can be specified. The changeover time defines the maximum time allowed for the auto-fill cycle to complete before the Model 286 assumes the storage vessel is empty and attempts to complete the fill from the other storage vessel in the auto-changeover system.

A changeover time of zero is not allowed, since not specifying a timeout would fill from only one storage vessel indefinitely. The default setting is 10 minutes.

4.3.8.5 Fill Timeout

```
Fill Timeout:
    0.0 min
```

If the *contacts* method of empty detection is selected, a fill timeout is still available as a failsafe backup to the contacts indication. If a fill timeout greater than zero is specified, then if an auto-fill cycle does not complete within the specified time, the Model 286 ignores the remote contact indication and de-energizes the respective AC output. After the fill timeout expires, a manual cycle of the AC output state is required in order to reset the auto-fill logic for the respective AC output, or the instrument power must be cycled.

If a zero fill timeout is specified, as long as the remote contact is closed, the Model 286 will attempt to fill from the respective storage vessel indefinitely. A value of zero minutes is the default setting.

Note

In order to reset the fill timer for a given AC output after expiration, the fill mode for that AC output must be set to either ON or OFF via the keypad or remote interface, or the power to the instrument must be cycled..

4.3.9 FILL Menu in Pre-Cool Mode

In the pre-cool controller mode, the FILL menu, accessible by pressing the **FILL** key with Channel 1 selected, provides four menu screens. Once in the FILL menu, the screens are accessible by repeatedly pressing the **MENU** key, and include interfaces for setting the AC output states, selecting the empty detection method, and setting timeouts. The pre-cool mode manages an auto-fill cycle[1] for one controlled dewar using AC Output 1. AC Output 2 is used to control a vent valve for purposes of pre-cooling a transfer line from a storage vessel.

1. An “auto-fill cycle” in the pre-cool mode is initiated by a liquid level less than the B setpoint of Channel 1, and is terminated once the liquid level reaches or exceeds the A setpoint of Channel 1. The first phase of the auto-fill cycle is the user-defined pre-cool time using the vent valve. The pre-cool time is repeated at the beginning of each auto-fill cycle.

4.3.9.1 AC Output 1

```
AC Output 1:
 On   Off  ►Auto
```

Controls the state of AC Output 1. Press the **OPTION** key to cycle between the three selections. The 1:FILL LED indicates the energized or de-energized state. The Auto selection allows the Model 286 to manage the auto-fill cycle for the controlled dewar.

4.3.9.2 AC Output 2

```
AC Output 2:
 On   Off  ►Auto
```

Controls the state of AC Output 2, which is connected to the vent valve. Press the **OPTION** key to cycle between the three selections. The 2:FILL LED indicates the energized or de-energized state. The Auto selection allows the Model 286 to manage the vent period specified by the pre-cool time.

4.3.9.3 Fill Timeout

```
Fill Timeout
    0.0 min
```

This menu adjusts the fill timeout setting for the AUTO fill mode of AC Output 1. If the A setpoint of Channel 1 is not achieved within this period, the AC Output 1 is de-energized and the 1:FILL LED blinks. Setting the fill timeout to zero allows the AUTO fill mode function to continue the fill operation indefinitely until the A setpoint of Channel 1 is achieved.

The fill timeout may be set to up to 9,999.9 minutes. The default setting is 0.0 minutes (i.e. no timeout).

Note

In order to reset the fill timer after expiration, the fill mode for AC Output 1 must be set to either ON or OFF via the keypad or remote interface, or the power to the instrument must be cycled.

4.3.9.4 Pre-Cool Time

```
Pre-Cool Time:
    2.0 min
```

The pre-cool time menu specifies the venting period at the beginning of each auto-fill cycle in the pre-cool mode. The vent valve connected to AC Output 2 remains open for the specified time, before the fill valve connected to AC Output 1 is opened to fill the controlled dewar.

The pre-cool time may be set to up to 9,999.9 minutes. The default value is 2.0 minutes. A value of 0.0 minutes is not allowed.

Caution

Since it is possible (and typically preferred) that cryogen will flow through the transfer line and out the vent before the expiration of the pre-cool time, the user is responsible for ensuring that any cryogen output through the vent line is safely routed to prevent injury.

4.3.10 ASN Menu

The assign menu is accessible by pressing the **ASN** key. The menu provides two screens for assigning a sensor input to the selected channel, and specifying whether the HI and LO alarm contacts will be associated with Channels 1 and 2 or Channels 3 and 4.

4.3.10.1 Sensor Input Assign

```
Ch 1: Assign
►A  B  C  D  ✱
```

Assigns a sensor input to the selected channel. Use the **OPTION** key to select the desired sensor input. The null selection ✱ disconnects all sensor inputs from the selected channel. The same sensor input may be assigned to multiple channels.

Use the **MENU** key to progress to the next screen.

4.3.10.2 Alarm Contacts

```
Alarm Contacts:
►Ch 1&2  Ch 3&4
```

Assigns the HI and LO alarm contacts, available via the rear panel connectors J5A and J5B, to either Channels 1 and 2, or Channels 3 and 4, respectively. See the *Appendix* for a pinout of the connectors.

4.3.11 MODE Menu

```
Controller Mode:
►Normal
```

```
Controller Mode:
►Auto-Changeover
```

```
Controller Mode:
►Pre-Cool
```

The MODE menu is activated by pressing the **MODE** key. The **OPTION** is used to cycle the controller mode between the three possible selections illustrated in the above menus: normal, auto-changeover, and pre-cool. The selection is effective immediately. For more information regarding the

functions of each mode, refer to the discussion in paragraph 1.5 on page 7. A feature matrix is also provided in paragraph 4.4 on page 56.

Note

If the auto-changeover or pre-cool controller modes are selected, Channel 2 becomes unavailable for level measurements and is assigned a null input. Upon re-selecting the normal mode, re-assignment of an input to Channel 2 is required.

Caution

Cycling through the mode selections could, depending upon the sensor inputs, cause undesired actuation of the AC outputs. Disconnect any valves from the AC outputs for maximum safety during mode selection.

4.3.12 MISC Menu

Various miscellaneous settings, accessible by pressing the **MISC** key in the default display mode followed by repeated use of the **MENU** key, allow specification of parameters associated with the muting the alarms, the display contrast, the IEEE-488 remote interface, or the serial remote interface. Consult the *Remote Interface Reference* section for more information regarding details of the communication interfaces.

4.3.12.1 Alarm Muting

```
Alarms:
 Audible  ►Muted
```

The alarm muting menu provides two selections using the **OPTION** key. If the alarms are audible, then the HI, LO, and RATE alarms will cause the Model 286 to emit a continuous tone. Any error condition will continue to be reported by a short beep even if the alarms are muted.

Note

The audible alarm may only be enabled or disabled on a global basis, and not on a channel-by-channel basis.

4.3.12.2 Display Contrast

```
Display Contrast
 80%
```

The display contrast menu provides for adjustment of the contrast of the LCD display from 0 to 100%. The default setting is 80%. Enter a numerical value and press the **ENTER** key to commit a change.

4.3.12.3 IEEE-488 Address

```
IEEE-488 Address
 22
```

If an IEEE-488 interface card is installed in the instrument, the above menu will be displayed for entry of the IEEE-488 primary address. The valid range is from 0 to 30. The Model 286 should be assigned a unique primary address on the IEEE-488 bus. The default primary address is 22. The Model 286 does not support secondary addressing.

4.3.12.4 Serial Baud Rate

```
Serial Baud Rate
 4800 ►9600
```

If a serial interface card is installed in the instrument, the above menu will be displayed for entry of the baud rate of the serial interface. Use the **OPTION** key to cycle between 1200, 2400, 4800, and 9600 baud (the settings are grouped in pairs in two screens). The default value is 9600 baud.

4.3.13 CAL Menu

The CAL menu, accessed by pressing the **CAL** key, is fully documented in the *Calibration* section beginning with paragraph 3.3 on page 29.

4.4 Feature Matrix

The feature matrix below summarizes the functions available for each channel for the three controller modes.

Mode	Channel	Feature								
		HI Alarm	HI Contact	LO Alarm	LO Contact	RATE Alarm	4–20 mA or 0–10 V	A – B Control Band	Switched AC	Contact Sense
Normal	Ch 1	✓	✓	✓	✓	✓	✓	✓	AC Output 1	✓
	Ch 2	✓	✓	✓	✓	✓	✓	✓	AC Output 2	✓
	Ch 3	✓	✓[1]	✓	✓[1]	✓				
	Ch 4	✓	✓[1]	✓	✓[1]	✓				
Auto-Changeover	Ch 1	✓	✓	✓	✓	✓	✓	✓	AC Outputs 1&2 [2]	✓[4]
	Ch 2	Channel Unavailable								
	Ch 3	✓	✓[1]	✓	✓[1]	✓				
	Ch 4	✓	✓[1]	✓	✓[1]	✓				
Pre-Cool	Ch 1	✓	✓	✓	✓	✓	✓	✓	AC Outputs 1&2 [3]	
	Ch 2	Channel Unavailable								
	Ch 3	✓	✓[1]	✓	✓[1]	✓				
	Ch 4	✓	✓[1]	✓	✓[1]	✓				

[1] Available for the channel if the alarm contacts have been assigned to Channels 3 & 4 (see paragraph 4.3.10.2 on page 53). In this condition, the alarm contacts are not availabe for Channels 1 & 2.

[2] AC Outputs 1 and 2 are used to control fill from two storage vessels (see paragraph 1.5.2 on page 8).

[3] AC Output 1 is used to control a fill valve, and AC Output 2 controls a vent valve (see paragraph 1.5.3 on page 9).

[4] Remote contact senses can be used to indicate if a storage vessel contains liquid (see paragraph 4.3.8.3 on page 49).

5 Remote Interface Reference

The Model 286 provides the capability of supporting RS-232, RS-422, or IEEE 488.2 compliant remote interfaces. Only one remote interface option may be installed.

5.1 SCPI Command Summary

The following manual conventions are used for SCPI (*Standard Commands for Programmable Instruments*) syntax for the remote interface commands:

- Braces { } enclose valid command string or value choices.
- A vertical bar | separates multiple choices.
- Triangle brackets < > indicate that you must supply a value.

For example, the command `UNITs {0|1|2}` indicates that the command `UNITs` has three value options: `0`, `1`, or `2`. Refer to the detailed description of each command for information regarding specific value choices and their meanings. Capitalized portions of the commands indicate acceptable abbreviations. Default settings are shown in bold.

System-Related Commands

(see page 72 for more information)

`*IDN?`
`*RST`
`*TST?`
<Ctrl-C>

`SYSTem:LOCal`
`SYSTem:REMote`
`SYSTem:ERRor?`

Status System Commands and Queries

(see page 73 for more information)

```
*STB?
*SRE <enable_value>
*SRE?

*CLS

*ESR?
*ESE <enable_value>
*ESE?

*OPC
*OPC?

{CH1|CH2|CH3|CH4}:STATus:ALARm:CONDition?
{CH1|CH2|CH3|CH4}:STATus:ALARm:EVENt?
{CH1|CH2|CH3|CH4}:STATus:ALARm:ENABle <enable_value>
{CH1|CH2|CH3|CH4}:STATus:ALARm:ENABle?

STATus:MEAS:CONDition?
STATus:MEAS:EVENt?
STATus:MEAS:ENABle <enable_value>
STATus:MEAS:ENABle?
```

Alarm Configuration Commands and Queries

(see page 75 for more information)

```
{CH1|CH2|CH3|CH4}:ALARm:HI <level>
{CH1|CH2}:ALARm:A <level>
{CH1|CH2}:ALARm:B <level>
{CH1|CH2|CH3|CH4}:ALARm:LO <level>
{CH1|CH2|CH3|CH4}:ALARm:RATE <rate>
ALARm:MUTE {0|1} or {NO|YES}

{CH1|CH2|CH3|CH4}:ALARm:HI?
{CH1|CH2}:ALARm:A?
{CH1|CH2}:ALARm:B?
{CH1|CH2|CH3|CH4}:ALARm:LO?
{CH1|CH2|CH3|CH4}:ALARm:RATE?
ALARm:MUTE?
```

Level and Usage Queries

(see page 76 for more information)

```
{CH1|CH2|CH3|CH4}:LEVel?
{CH1|CH2|CH3|CH4}:USAGe?
```

Fill Modes Control and Query Commands

(see page 76 for more information)

```
FILL:MODE {0|1|2} or {NORMAL|AUTOCH|PRECOOL}
FILL:MODE?

AUTOCH:FILL:EMPTY {0|1} or {TIMEOUT|CONTACTS}
AUTOCH:FILL:EMPTY?
{CH1|CH2}:FILL:STATE {0|1|2} or {OFF|ON|AUTO}
{CH1|CH2|AUTOCH|PRECOOL}:FILL:TIMEout <minutes>
{CH1|CH2}:FILL:INHibit {0|1} or {NO|YES}

{CH1|CH2}:FILL:STATE?
{CH1|CH2|AUTOCH|PRECOOL}:FILL:TIMEout?
{CH1|CH2}:FILL:INHibit?
{CH1|CH2}:FILL:ELapsed?
```

Assignment Command and Query

(see page 79 for more information)

```
{CH1|CH2|CH3|CH4}:ASN {A|B|C|D}
{CH1|CH2|CH3|CH4}:ASN?

CONTACTS {0|1}
CONTACTS?
```

Calibration Commands and Queries

(see page 80 for more information)

```
CAL:UNLOCK <cal_passcode>

{A|B|C|D}:CAL:LENgth <selection>,<active_length>
{A|B|C|D}:CAL:PERForm <selection>,{MIN|MAX}
{A|B|C|D}:CAL:ACTIVE <selection>
{A|B|C|D}:CAL:APPROX <selection>,<approx_factor>
{A|B|C|D}:CAL:OFFSET <selection>,<offset_factor>

{A|B|C|D}:CAL:LENgth <selection>?
{A|B|C|D}:CAL:ACTIVE?
{A|B|C|D}:CAL:APPROX <selection>?
{A|B|C|D}:CAL:OFFSET <selection>?

CAL:LOCK
```

Remote Units Commands and Queries

(see page 81 for more information)

```
UNITs {0|1|2}
PERCent
INches
CM

UNITs?
```

5.2 Programming Overview

The Model 286 conforms to the SCPI (*Standard Commands for Programmable Instruments*) IEEE standard. The SCPI standard is an ASCII-based specification designed to provide a consistent command structure for instruments from various manufacturers.

The Model 286 also implements a status system for monitoring the state of the Model 286 through the *Standard Event, Alarm,* and *Status Byte* registers.

5.2.1 SCPI Language Introduction

SCPI commands conform to a tree structure where commands are grouped according to common keywords. For example, commands associated with an alarm setting begin with the keyword `ALARm`. The keywords are shown in upper case and lower case to indicate acceptable abbreviations. For the example keyword `ALARm`, the user may send either the abbreviated form of `ALAR`, or the entire keyword `ALARM`. Any other form of the keyword is illegal and will generate an error.

Some commands also require multiple keywords to traverse the tree structure of the entire Model 286 command set. For example, commands associated with the channel 1 alarm register require the prefix of `CH1:STATus:ALARm`. Note that a colon (`:`) separates the keywords. No spaces are allowed before or after the colon. Values must be separated from the command keyword(s) by at least one space.

5.2.2 SCPI Status System

The Model 286 status system reports various conditions of the instrument in three register groups shown in Figure 5-1. The register groups consist of a condition and/or event register, and an enable register which controls the actions of specific bits within the condition or event registers.

A *condition* register continuously monitors the state of the instrument. The bits of a condition register are updated in real time. A condition register is read-only and is not cleared when you read the register. A query of a condition register returns a decimal value in the appropriate output buffer which corresponds to the binary-weighted sum of all bits set in the register.

An *event* register latches various events. An event register is not buffered, therefore once a bit is set, further occurrences of that event are ignored. Once a bit is set in an event register, the bit remains set until the register is read (`*ESR?`) or a `*CLS` (clear status) command is issued. A query of an event register returns a decimal value in the appropriate output buffer which corresponds to the binary-weighted sum of all bits set in the register.

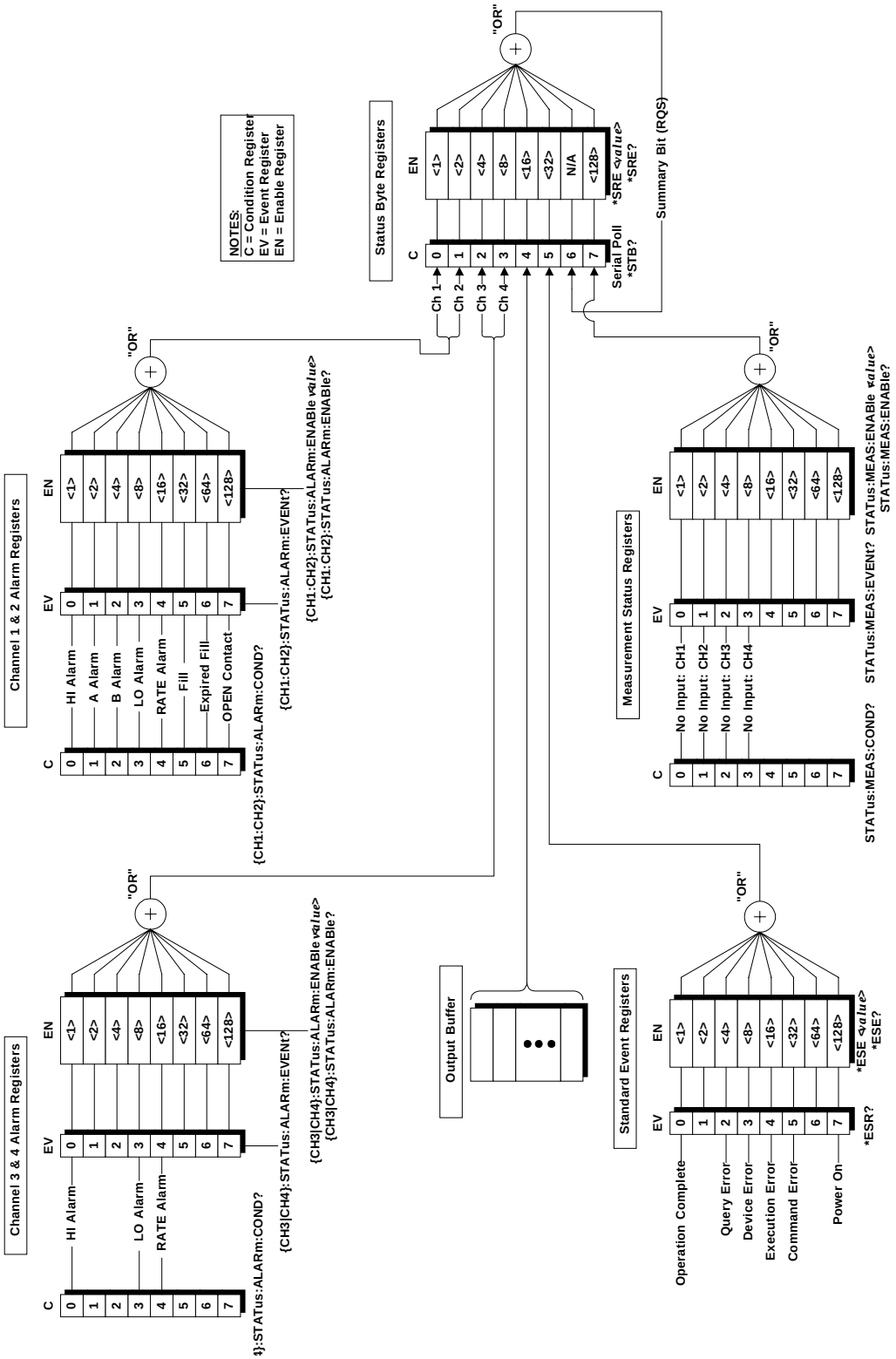

Figure 5-1. The Model 286 status system.

An *enable* register (or bitmask) defines which bits in an event register are reported to the Status Byte register group. An enable register can be both written and queried. The *CLS (clear status) command does not clear an enable register. To enable or disable bits in an enable register, write a decimal value which corresponds to the binary-weighted sum of the bits you wish reported to the Status Byte register.

5.2.2.1 Status Byte Registers

The Status Byte register group reports conditions from the Standard Event register or output buffers. Data in the output buffer is immediately reported in the "Message Available" bit (bit 4). Clearing a bit in the Standard Event or Alarm Event registers will update the corresponding bit in the Status Byte register, according to the Standard Event and Alarm Event enable registers. Reading the pending messages in the output buffers will clear the "Message Available" bit. The bit definitions for the Status Byte register are defined in Table 5-1.

Table 5-1. Bit definitions for the Status Byte register.

Bit Number	Decimal Value	Definition
0 CH 1 Alarm Event	**1**	One or more enabled bits are set in an Alarm Event register of Channel 1.
1 CH 2 Alarm Event	**2**	One or more enabled bits are set in an Alarm Event register of Channel 2.
2 CH 3 Alarm Event	**4**	One or more enabled bits are set in an Alarm Event register of Channel 3.
3 CH 4 Alarm Event	**8**	One or more enabled bits are set in an Alarm Event register of Channel 4.
4 Message Available	**16**	The output buffer contains unread data.
5 Standard Event	**32**	One or more enabled bits are set in the Standard Event register.
6 Status Byte Summary	**64**	One or more enabled bits are set in the Status Byte register.
7 Measurement Event	**128**	One or more enabled bits are set in the Measurement Event register.

The Status Byte register provides the capability of generating a user-defined IEEE-488 service request (SRQ) by enabling the desired bits using the *SRE <*value*> command. If a Status Byte register bit is enabled, then when that bit is set, an SRQ is generated on the IEEE-488 bus.

For example, if the command *SRE 8 is sent to the Model 286, then if the Channel 1 AC output is energized and the respective bit in the Channel 1

Alarm Event register is enabled, the Model 286 will immediately generate an SRQ on the IEEE-488 bus. Note that an SRQ is only asserted when the AC output *transitions from de-energized to energized*, since this is consistent with how the bit is set in the Alarm Event register.

Bit 4, indicating available data in an output buffer, is similar in that the SRQ is only asserted when data is first available in an output buffer. Bit 4 remains set until all data has been read from the output buffer.

The Status Byte *condition register* is cleared when any of the following occurs:

- A `*CLS` command is executed.
- The Standard Event register is read (only bit 5 of the Status Byte register is cleared).
- The indicated condition no longer exists.
- The power is turned off and then back on.

The Status Byte *enable register* is cleared when any of the following occurs:

- The `*SRE 0` command is executed.
- The power is turned off and then back on.

5.2.2.2 Serial Polling and the Service Request (SRQ)

In order to use the SRQ feature of the Model 286, you must configure your host computer and IEEE-488 interface card to respond to the IEEE-488 service request. If the Status Byte enable register enables any bits of the Status Byte register, then the enabled bit(s) will generate an SRQ when they transition from “0” to “1”. The host computer can then poll the instruments on the IEEE-488 bus to determine which is asserting the service request line (the instrument which returns a response to a Serial Poll with bit 6 set).

> **Note**
>
> *If the Model 286 receives a Serial Poll, bit 6 of the Status Byte register is cleared and the service request line (SRQ) is cleared.*

If more than one bit is enabled in the Status Byte enable register, then the user must query the Status Byte register by issuing either a Serial Poll message, or the `*STB?` command. A Serial Poll is executed immediately by the Model 286 and may not reflect the effects of the most recently executed command. Use the `*OPC?` command for positive indication that all prior commands have been executed.

5.2.2.3 Reading the Status Byte using *STB?

The `*STB?` query returns the contents of the Status Byte register, but it is processed in the command queue like any other command. The `*STB?` query returns the same result as a Serial Poll; however, bit 6 of the Status Byte register is not cleared. Issuing an `*STB?` query does not clear an SRQ condition.

5.2.2.4 Using the Message Available Bit

The "Message Available" bit (bit 4) of the Status Byte register can be used to determine when data is available to read into your host computer. The instrument clears the "Message Available" bit only after all data has been read from the output buffer.

The "Message Available" bit of the Status Byte register is useful for determining if *queries* have executed; however, they are not useful alone for determining if *commands* have completed execution, since commands do not provide return data.

5.2.3 Standard Event Registers

The Standard Event register group reports a power-on condition, reports various error conditions, and indicates when an operation has completed. Any or all of the Standard Events can be reported to the Status Byte register by enabling the corresponding bit(s) in the Standard Event enable register (see Figure 5-1). To set the Standard Event enable register, write a binary-weighted decimal value using the `*ESE` <*value*> command.

The bit definitions for the Standard Event register are provided in Table 5-2. To query the instrument for the details of a reported error in the Standard Event register, use the `SYSTem:ERRor?` query. See paragraph 5.6 for a complete discussion of the error buffer and messages.

The Standard Event *register* is cleared when any of the following occurs:

- The `*CLS` (clear status) command is executed.
- The Standard Event register is queried using the `*ESR?` command.
- The power is turned off and then back on (with the exception of the "Power On" bit).

The Standard Event *enable register* is cleared when any of the following occurs:

- The `*ESE 0` command is executed.
- The power is turned off and then back on.

Table 5-2. Bit definitions for the Standard Event register.

Bit Number	Decimal Value	Definition
0 Operation Complete	**1**	All commands prior to and including `*OPC` have been executed.
1 *Not Used*	2	Always “0”.
2 Query Error	**4**	A query error occurred. See the error messages in the -200 range.
3 Device Error	**8**	A device error occurred. See the error messages in the -400 range.
4 Execution Error	**16**	An execution error occurred. See the error messages in the -300 range.
5 Command Error	**32**	A command error occurred. See the error messages in the -100 range.
6 *Not Used*	64	Always “0”.
7 Power On	**128**	Power has been cycled since the last time the Standard Event register was read or cleared.

5.2.4 Alarm Registers

The Alarm register group reports the present condition of the alarms for each channel in the four *Alarm Condition* registers, and latches the ON state of each alarm in the four *Alarm Event* registers.

Any or all of the bits in the Alarm Event registers can be reported to bit 3 of the Status Byte register by enabling the corresponding bit(s) in the Alarm Event enable registers (see Figure 5-1). For example, to set the Channel 1 Alarm Event enable register, write a binary-weighted decimal value using the `CH1:STATus:ALARm:ENABle` <*value*> command.

The bit definitions for the Alarm Condition and Event registers are identical and are provided in Table 5-3. The Alarm Condition registers are continually updated for each level measurement is available. The Alarm Event registers latch the occurrence of each alarm and the respective bit(s) remain set until cleared.

The Alarm Event *registers* are cleared when any of the following occurs:

- The `*CLS` (clear status) command is executed.

- An Alarm Event register is queried using the `{CH1|CH2|CH3|CH4}:STATus:ALARm:EVENt?` command.
- The power is turned off and then back on.

The Alarm Event *enable register* is cleared when any of the following occurs:

- The `{CH1|CH2|CH3|CH4}:STATus:ALARm:ENABle 0` command is executed.
- The power is turned off and then back on.

Note

The A, B, FILL, EXPIRED, and CONTACT bits are only available in the Alarm Condition and Alarm Event registers for Channels 1 and 2.

Table 5-3. Bit definitions for each of the Alarm Condition and Alarm Event registers.

Bit Number	Decimal Value	Definition
0 HI Alarm	**1**	“HI” alarm condition or event.
1 A Alarm	**2**	“A” alarm condition or event (CH1 and CH2 only).
2 B Alarm	**4**	“B” alarm condition or event (CH1 and CH2 only).
3 LO Alarm	**8**	“LO” alarm condition or event.
4 RATE Alarm	**16**	“RATE” alarm condition or event.
5 FILL bit	**32**	The associated AC output is energized (CH1 and CH2 only).
6 EXPIRED bit	**64**	The associated AC output fill cycle has expired and the output is de-energized (CH1 and CH2 only).
7 CONTACT bit	**128**	A “1” indicates that the associated contact sense detects an open circuit (CH1 and CH2 only).

5.2.5 Measurement Registers

The Measurement register group reports the present condition of the measurements for each channel in the *Measurement Condition* register, and latches the ON state of each condition bit in the *Measurement Event* register.

Any or all of the bits in the Measurement Event register can be reported to bit 7 of the Status Byte register by enabling the corresponding bit(s) in the Measurement Event enable register (see Figure 5-1). For example, to set the Measurement Event enable register, write a binary-weighted decimal value using the `STATus:MEAS:ENABle` <*value*> command.

The bit definitions for the Measurement Condition and Event registers are identical and are provided in Table 5-4. The Measurement Condition register is continually updated for each level measurement cycle. The Measurement Event register latches the ON state of each condition bit, and the respective bit(s) remain set until cleared.

The Measurement Event *register* is cleared when any of the following occurs:

- The `*CLS` (clear status) command is executed.
- The Measurement Event register is queried using the `STATus:MEAS:EVENt?` command.
- The power is turned off and then back on.

The Measurement Event *enable register* is cleared when any of the following occurs:

- The `STATus:MEAS:ENABle 0` command is executed.
- The power is turned off and then back on.

Table 5-4. Bit definitions for each of the Measurement Condition and Measurement Event registers.

Bit Number	Decimal Value	Definition
0 No input for CH 1	**1**	No valid input signal for the sensor input assigned to Channel 1.
1 No input for CH 2	**2**	No valid input signal for the sensor input assigned to Channel 2.
2 No input for CH 3	**4**	No valid input signal for the sensor input assigned to Channel 3.
3 No input for CH 4	**8**	No valid input signal for the sensor input assigned to Channel 4.
4 *Not Used*	16	Always “0”.
5 *Not Used*	32	Always “0”.
6 *Not Used*	64	Always “0”.
7 *Not Used*	128	Always “0”.

5.2.6 Command Handshaking

The Model 286 provides an internal command queue that can store up to 4 commands or queries. However, it is possible that the host computer can overwhelm the command queue by sending commands faster than the Model 286 can execute. If the Model 286 cannot process a command due to a full command queue, the command is ignored and the `-303, "Input overflow"` error is reported.

Handshaking is generally not a concern unless more than 4 *commands* are sent sequentially. If a *query* is sent, the user will normally wait for return data for the queries before proceeding to send the next query or command. In the case of sending numerous *commands* in sequence, there are two methods available to help prevent command queue overflows which are discussed below.

5.2.6.1 Using the `*OPC` Command

The `*OPC` command is executed within the normal command queue. Upon completed execution of the `*OPC` command, the “Operation Complete” bit (bit 0) of the Standard Event register will be set.

If the operator has so configured the Standard Event and Status Byte enable registers, the `*OPC` command can generate an IEEE-488 service request when execution completes (see Figure 5-1). If using the serial port, the `*OPC?` query is a better alternative since a response is returned directly to the requesting communications interface.

An example of a sequence of commands using the `*OPC` command to handshake is the following:

```
PERCENT; CH1:ALARM:HI 90.0; CH1:ALARM:LO 10.0; *OPC;
```

The above example sets the remote units to percent, the Channel 1 “HI” alarm to 90.0%, the Channel 1 “LO” alarm to 10.0%, and sends `*OPC` as the 4th command for determining when execution all of the commands (including `*OPC`) has completed. If the Standard Event and Status Byte enable registers are correctly configured, the `*OPC` command will then result in an IEEE-488 service request when execution completes. Alternately, the Serial Poll function of the IEEE-488 bus may be used to determine completion of the command.

5.2.6.2 Using the `*OPC?` Query

The `*OPC?` query is similar to the `*OPC` command, but instead of setting the “Operation Complete” bit of the Standard Event register, the `*OPC?` query returns a “1” (plus termination characters) to the requesting remote interface when executed. Using `*OPC?` is often the most straightforward solution for determining completed command execution. It is also

unambiguous since the result is returned directly to the requesting remote communication interface.

5.2.7 Remote Units

The Model 286 supports a *remote units setting* that is maintained separately from the units selected via the front panel keypad. The remote units setting is retained between power-ups. If the `PERCENT` command is sent to the remote interface, the remote units for both remote interfaces is set to percent. All alarm values should then be sent as a percent value, and all return level data and alarm queries are returned in units of percent.

The `UNITS?` query returns the currently selected remote units (e.g. the percent setting would return `0,"PERCENT"`).

5.3 RS-232/422 Configuration

The Model 286 allows the baud rate of the RS-232/422 interface to be configured by the user. See the menu description in paragraph 4.3.12.4 on page 55 for illustration of the menu provided for configuring the baud rate of the Model 286 serial interface.

The *Comm Menu* provides menus to configure the baud rate (the default is shown in bold). All additional parameters are fixed:

- *Baud Rate*: 1200, 2400, 4800, **9600**
- *Parity and Data Bits*: **No Parity/8 Data Bits** (fixed)
- *Number of Start Bits*: **1 bit** (fixed)
- *Number of Stop Bits*: **1 bit** (fixed)
- *Flow Control*: **None** (fixed)

5.3.1 Serial Port Connector

An IBM-compatible computer's serial port can be directly connected to the Model 286 via a standard DB25 female-to-DB9 male PC modem cable if the Model 286 is configured for RS-232. Refer to your computer's documentation to determine which serial ports are available on your computer and the required connector type. If a DB9 connector is required at the computer interface, the connector translation is provided in the *Appendix*.

The Model 286, when configured for RS-232, uses only three wires of the rear-panel DB9 connector: pin 2 (receive), pin 3 (transmit), and pin 7 (common). The RS-232 pinout is fully documented in the *Appendix*. The Model 286 is classified as a DCE (Data Communication Equipment) device

since it transmits data on pin 3 and receives data on pin 2. The computer or terminal to which the Model 286 is attached must do the opposite, i.e., transmit on pin 2 and receive on pin 3 (the requirements for a DTE, or Data Terminal Equipment device). If a serial-to-parallel converter is used, it must be capable of receiving data on pin 3 or the cable connected to the Model 286 must interchange the wires between pins 2 and 3.

Optional RS-422 connector pinout is provided in the *Appendix*.

5.3.2 Termination Characters

All commands and queries are transmitted and received as ASCII values and are case insensitive. The Model 286 always transmits <*CR*><*LF*> (i.e. a *carriage return* followed by a *linefeed*) at the end of an RS-232 transmission. The Model 286 can accept <*CR*>, <*LF*>, <*CR*><*LF*>, or <*LF*><*CR*>, or a semicolon (**;**) as termination characters from an external computer.

5.3.3 Device Clear

A device clear can be initiated through the serial interface by sending the <*Ctrl-C*> (ASCII code 03) character. The status registers and the error queue are left unchanged when the device clear character is received. Device clear performs the following actions:

- The Model 286 serial output buffer is cleared.
- The Model 286 is prepared to accept a new command.

5.4 IEEE-488 Configuration

The Model 286 allows the primary IEEE-488 address of the Model 286 to be configured by the user. See the menu description in paragraph 4.3.12.3 on page 55 for an illustration of the menu provided for configuring the Model 286 IEEE-488 address.

5.4.1 Termination Characters

All commands are transmitted and received as ASCII values and are case insensitive. The Model 286 always transmits <*LF*> with EOI as the termination for return data. The Model 286 can accept <*CR*>, <*LF*>, or <*LF*> with EOI as termination characters from an external IEEE-488 interface. More than one command may be sent before a terminator if each command is separated with a semicolon (**;**).

5.4.2 Device Clear

The Device Clear is a low-level IEEE-488 bus message which can be used to return the instrument to a responsive state if communication appears to have stalled. The status registers and the error queue are left unchanged

when a Device Clear message is received. Device Clear performs the following actions:

- The Model 286 IEEE-488 output buffer is cleared.
- The Model 286 is prepared to accept a new command.

5.5 Command Reference

The following paragraphs present all instrument commands and queries in related groups and a detailed description of the function of each command or query is provided. Examples are also provided where appropriate. Return strings may be up to 80 characters in length.

5.5.1 System-Related Commands

- `*IDN?`

Returns the instrument's identification string. The identification string contains the AMI model number and firmware revision code.

- `*RST`

Resets the instrument. All non-volatile calibration and instrument settings are restored. Status is cleared.

- `*TST?`

Performs a self-test. Currently always returns "1" plus a diagnostic code useful for troubleshooting by an Authorized AMI Technical Support Representative.

- *<Ctrl-C>*

Equivalent to sending a Device Clear message over the IEEE-488 interface. *<Ctrl-C>* is only accepted from the serial interface. This clears the output buffers of the instrument and prepares the instrument for a new command. Status registers are unaffected. *<Ctrl-C>* corresponds to ASCII code 03.

- `SYSTem:LOCal`

Enables all front panel controls. All front panels controls are enabled by default after a power-up or `*RST` command.

- `SYSTem:REMote`

Disables all front panel controls.

- `SYSTem:ERRor?`

Queries the instrument's error buffer. Up to 10 errors are stored in the instrument's error buffer. Errors are retrieved in first-in-first-out (FIFO) order. The error buffer is cleared by the `*CLS` (clear status) command or when the power is cycled. Errors are also cleared as they are read. See page 83 for a complete description of the error buffer and messages.

5.5.2 Status System Commands

The status system register groups and commands are illustrated in Figure 5-1 on page 62.

- `*STB?`

Returns the contents of the Status Byte register. The `*STB?` command is similar in function to an IEEE-488 Serial Poll; however, the command is executed in the order received as any other command. In contrast to the IEEE-488 Serial Poll, `*STB?` does not clear an SRQ condition or the "Summary Bit" (bit 6) of the Status Byte register.

- `*SRE` <*enable_value*>

Enables bits in the Status Byte register to be reported in the "Summary Bit" (bit 6) of the Status Byte register. To enable bits, you must write a decimal <*enable_value*> which corresponds to the binary-weighted sum of the bits you wish to enable. Refer to Table 5-1 on page 63 for more information. For example, to enable controller output state only in the "Summary Bit" of the Status Byte register, send the command:

```
*SRE 2;
```

- `*SRE?`

The `*SRE?` query returns a decimal sum which corresponds to the binary-weighted sum of the bits enabled by the last `*SRE` command.

- `*CLS`

Clears the Standard Event register and the error buffer.

- `*ESR?`

Returns the contents of the Standard Event register as a binary-weighted sum.

- `*ESE` <*enable_value*>

Enables bits in the Standard Event register to be reported in the "Standard Event" bit (bit 5) of the Status Byte register. To enable bits, you must write a decimal <*enable_value*> which corresponds to the binary-weighted sum of the bits you wish to enable. Refer to Table 5-2 on page 66

for more information. For example, to enable *all* categories of error messages to be reported in bit 5 of the Status Byte register, send:

```
*ESE 60;
```

- `*ESE?`

The `*ESE?` query returns a decimal sum which corresponds to the binary-weighted sum of the bits enabled by the last `*ESE` command.

- `*OPC`

Sets the "Operation Complete" bit (bit 0) of the Standard Event register when executed. See page 69 for a complete discussion.

- `*OPC?`

Returns "1" to the requesting interface when executed. See page 69 for more information.

- `{CH1|CH2|CH3|CH4}:STATus:ALARm:CONDition?`

Returns the contents of an Alarm Condition register as a binary-weighted sum.

- `{CH1|CH2|CH3|CH4}:STATus:ALARm:EVENt?`

Returns the contents of an Alarm Event register as a binary-weighted sum.

- `{CH1|CH2|CH3|CH4}:STATus:ALARm:ENABle` <*enable_value*>

Enables bits in an Alarm Event register to be reported in the "Alarm Event" bit (bit 2) of the Status Byte register. To enable bits, you must write a decimal <*enable_value*> which corresponds to the binary-weighted sum of the bits you wish to enable. Refer to Table 5-3 on page 67 for more information. For example, to enable *all* alarm events for Channel 1 to be reported in bit 0 of the Status Byte register, send:

```
CH1:STATus:ALARm:ENABle 127;
```

- `{CH1|CH2|CH3|CH4}:STATus:ALARm:ENABle?`

Returns a decimal sum which corresponds to the binary-weighted sum of the bits enabled by the last `{CH1|CH2|CH3|CH4}:STATus:ALARm:ENABle` <*enable_value*> command.

- `STATus:MEAS:CONDition?`

Returns the contents of an Measurement Condition register as a binary-weighted sum.

- `STATus:MEAS:EVENt?`

Returns the contents of an Measurement Event register as a binary-weighted sum.

- `STATus:MEAS:ENABle` <*enable_value*>

Enables bits in an Measurement Event register to be reported in the "Measurement Event" bit (bit 7) of the Status Byte register. To enable bits, you must write a decimal <*enable_value*> which corresponds to the binary-weighted sum of the bits you wish to enable. Refer to Table 5-3 on page 67 for more information.

- `STATus:MEAS:ENABle?`

Returns a decimal sum which corresponds to the binary-weighted sum of the bits enabled by the last `STATus:MEAS:ENABle` <*enable_value*> command.

5.5.3 Alarm Configuration Commands and Queries

The alarm configuration commands and queries provide read/write access to the alarm settings available within the HI, LO, RATE, and MUTE menus.

- `{CH1|CH2|CH3|CH4}:ALARm:HI` <*level*>

Sets the HI alarm limit for the selected channel in the presently selected remote units.

- `{CH1|CH2|CH3|CH4}:ALARm:HI?`

Returns the HI alarm value for the selected channel in the presently selected remote units.

- `{CH1|CH2}:ALARm:A` <*level*>

Sets the A setpoint, or upper control band limit, for the selected channel in the presently selected remote units.

- `{CH1|CH2}:ALARm:A?`

Returns the A setpoint, or upper control band limit, for the selected channel in the presently selected remote units.

- `{CH1|CH2}:ALARm:B` <*level*>

Sets the B setpoint, or lower control band limit, for the selected channel in the presently selected remote units.

- `{CH1|CH2}:ALARm:B?`

Returns the B setpoint, or lower control band limit, for the selected channel in the presently selected remote units.

- `{CH1|CH2|CH3|CH4}:ALARm:LO` *<level>*

Sets the LO alarm limit for the selected channel in the presently selected remote units.

- `{CH1|CH2|CH3|CH4}:ALARm:LO?`

Returns the LO alarm value for the selected channel in the presently selected remote units.

- `{CH1|CH2|CH3|CH4}:ALARm:RATE` *<rate>*

Sets the RATE alarm limit for the selected channel in the presently selected remote units per hour. The RATE alarm applies to both positive (fill) or negative (empty) usage rates.

- `{CH1|CH2|CH3|CH4}:ALARm:RATE?`

Returns the RATE alarm value for the selected channel in the presently selected remote units per hour.

- `ALARm:MUTE {`**`0`**`|1}` *or* `{`**`NO`**`|YES}`

Mutes or enables the continuous audible alarm if a HI, LO, or RATE alarm condition exists. Error conditions will still report as a short audible beep. “0” or “NO” enables the continuous audible alarm. “1” or “YES” disables (or mutes) the continuous audible alarm.

- `ALARm:MUTE?`

Returns “1” if the continuous audible alarm is muted, “0” otherwise.

5.5.4 Level and Usage Queries

The level and usage queries return the current level and usage rate in the presently selected remote units.

- `{CH1|CH2|CH3|CH4}:LEVel?`

Returns the level for the selected channel in the presently selected remote units.

- `{CH1|CH2|CH3|CH4}:USAGe?`

Returns the usage rate for the selected channel in the presently selected remote units per minute.

5.5.5 Fill Modes Control and Query Commands

The following commands and queries control and return the AC output states for the various controller modes.

- `FILL:MODE {0|1|2}` *or* `{NORMAL|AUTOCH|PRECOOL}`

Selects the controller mode. An argument of “0” or “NORMAL” selects the normal mode of operation (two independent auto-fills). An argument of “1” or “AUTOCH” selects the auto-changeover mode. An argument of “2” or “PRECOOL” selects the pre-cool mode.

- `FILL:MODE?`

Returns the current controller mode.

`0, ”NORMAL”` is returned if the controller mode is normal.

`1, ”AUTOCH”` is returned if the controller mode is auto-changeover.

`2, ”PRECOOL”` is returned if the controller mode is pre-cool.

- `AUTOCH:FILL:EMPTY {0|1}` *or* `{TIMEOUT|CONTACTS}`

Selects the empty detection method for the auto-changeover mode. An argument of “0” or “TIMEOUT” selects the timeout method of empty detection. An argument of “1” or “CONTACTS” selects contact senses as the method of empty detection.

- `AUTOCH:FILL:EMPTY?`

Returns the selected empty detection method for the auto-changeover mode.

`0, ”TIMEOUT”` is returned for the timeout method of empty detection.

`1, ”CONTACTS”` is returned for the contacts method of empty detection.

- `{CH1|CH2}:FILL:STATE {0|1|2}` *or* `{OFF|ON|AUTO}`

Selects the fill state of each AC output (`CH1` prefix selects AC Output 1 and `CH2` prefix selects AC Output 2) *for all controller modes*.

An argument of “0” or “OFF” de-energizes the respective AC output. An argument of “1” or “ON” energizes the AC output. An argument of “2” or “AUTO” allows the Model 286 to control the state of the AC output according to the selected controller mode.

- `{CH1|CH2}:FILL:STATE?`

Returns the state of the selected AC output (`CH1` prefix selects AC Output 1 and `CH2` prefix selects AC Output 2) *for all controller modes* according to the table below:

Table 5-5. Return characters and their meanings for the `{CH1|CH2}:FILL:STATE?` query.

Return Characters	Meaning
`0, "OFF"`	AC output is de-energized.
`1, "ON"`	AC output is energized.
`2, "AUTO_OFF"`	AC output is under automatic control but is de-energized.
`3, "AUTO_ON"`	AC output is under automatic control and is currently energized.
`4, "EXPIRED"`	AC output is under automatic control and is currently expired due to timeout condition or remote contact sense, and is de-energized.

- `{CH1|CH2|AUTOCH|PRECOOL}:FILL:TIMEout <`*minutes*`>`

Sets the timeouts associated with the various controller modes in minutes.

- `{CH1|CH2|AUTOCH|PRECOOL}:FILL:TIMEout?`

Returns the timeouts, in minutes, associated with various controller modes.

- `{CH1|CH2|PRECOOL}:FILL:ELapsed?`

Returns the elapsed time of an auto-fill cycle that is subject to a fill timeout setting. A return value of zero indicates that an auto-fill cycle is not active, or a timeout value was not specified.

In normal mode, use the `{CH1|CH2}:FILL:ELapsed?` queries to return the fill time for the auto-fill cycle of each respective channel.

In auto-changeover mode, use the `CH1:FILL:ELAPSED?` query to return the elapsed time for an auto-fill cycle from either storage vessel.

In pre-cool mode, use the `CH1:FILL:ELapsed?` query to return the elapsed time for the auto-fill cycle of the controlled dewar (return value includes the pre-cool time). Use the `PRECOOL:FILL:ELapsed?` query to determine how long the vent valve has been open.

- `{CH1|CH2}:FILL:INHibit {0|1}` *or* `{NO|YES}`

For normal mode only: Selects whether the remote contact sense is used to inhibit the initiation of a auto-fill cycle. An argument of “0” or “NO” selects no fill inhibit function (i.e. any remote contact sense is ignored). An argument of “1” or “YES” activates the fill inhibit function based on the remote contact sense for the respective channel.

If “YES” is selected, an open circuit at the appropriate contact sense input will inhibit initiation of an auto-fill cycle and end any auto-fill cycle currently in progress.

- `{CH1|CH2}:FILL:INHibit?`

Returns the fill inhibit setting for the specified channel.

`0, ”NONE”` is returned if no fill inhibit is selected.

`1, ”CONTACT”` is returned if an open remote contact sense is to be used to inhibit an auto-fill cycle from initiating.

5.5.6 Assignment Commands and Queries

The follow commands and queries set and return the rear-panel sensor input assignment for a selected channel and determine if the HI and LO alarm contacts are used for Channels 1 & 2, or Channels 3 & 4.

- `{CH1|CH2|CH3|CH4}:ASN {A|B|C|D|-}`

Assigns a rear panel sensor input to the selected channel. The same sensor input may be assigned to multiple channels. The “`-`” value sets the input to null, and no measurements are performed for the channel.

- `{CH1|CH2|CH3|CH4}:ASN?`

Returns the input assignment for the selected channel. The return value is a single character: `A`, `B`, `C`, `D`, or `-`. A return value of “`-`” indicates a null input assignment (no measurement).

- `CONTACTS {0|1}`

A value “0” assigns the HI and LO alarm contacts of J5A and J5B to Channels 1 and 2, respectively. A value of “1” assigns the alarms contacts to Channels 3 and 4.

- `CONTACTS?`

Returns a value of “0”, indicating the alarm contacts are assigned to Channels 1; or a value of “1”, indicating the alarm contacts are assigned to Channels 3 and 4.

5.5.7 Calibration Commands and Queries

The calibration command provides the user with a method of remotely initiating a calibration and setting or querying for various instrument settings associated with the calibration function. The <*selection*> value indicates that a value of 1, 2, 3, or 4 should be specified to indicate which calibration is to be modified or queried of the four possible calibrations for each input.

- CAL:UNLOCK <*cal_passcode*>

With the valid passcode sent as an argument, the command unlocks the calibration for modification. The calibration remains unlocked until the CAL:LOCK command is sent, the instrument is reset, or the power is cycled.

- {A|B|C|D}:CAL:LENgth <*selection*>,<*active_length*>

Sets the active length for the sensor input and calibration selection specified. The remote units must be either centimeters or inches in order to specify an active length value.

For example, the commands:

```
UNITS 1; B:CAL:LENGTH 2, 100.0;
```

would set the active length for sensor input B, calibration selection 2, to 100.0 inches.

- {A|B|C|D}:CAL:LENgth <*selection*>?

Returns the active length setting for the specified sensor input and calibration selection.

- {A|B|C|D}:CAL:PERform <*selection*>,{MIN|MAX}

Performs a MIN or MAX calibration for the specified sensor input and calibration selection. The instrument will beep once if the calibration is successful. *Two beeps* indicates that either the new MIN point is greater than the previous MAX, or the new MAX point is less than the previous MIN.

- {A|B|C|D}:CAL:ACTIVE <*selection*>

Sets the active calibration for the specified sensor input. The calibration must be valid, i.e. at least one MIN and MAX point should have been previously set.

- {A|B|C|D}:CAL:ACTIVE?

Returns a single digit: 1, 2, 3, or 4. This indicates which calibration, of the four possible calibrations, is currently selected as active for the specified input.

- `{A|B|C|D}:CAL:APPROX` <*selection*>,<*approx_factor*>

Sets the approximate calibration factor for the sensor input and calibration selection specified.

- `{A|B|C|D}:CAL:APPROX` <*selection*>?

Returns the approximate calibration factor for the sensor input and calibration selection specified.

- `{A|B|C|D}:CAL:OFFSET` <*selection*>,<*offset_factor*>

Sets the offset factor for the sensor input and calibration selection specified.

- `{A|B|C|D}:CAL:OFFSET` <*selection*>?

Returns the offset factor for the sensor input and calibration selection specified.

- `CAL:LOCK`

Prevents any subsequent commands from modifying any sensor input calibration. Queries related to the calibration may still be performed.

5.5.8 Remote Units Commands and Queries

The remote units commands and queries provide the capability of selecting between units of percent, inches, and centimeters for all parameters and return values for level and alarm commands and queries. The remote units are independent of the display units selected via the front panel. The remote units setting is persistent between power-ups of the Model 286.

- `UNITs {0|1|2}`

Selects between the percent (0), inches (1), and centimeters (2) units. For example, the command:

```
UNITS 1;
```

selects inches for the remote units.

- `UNITs?`

Returns the currently selected units.

`0, "PERCENT"` is returned if the remote units are percent.

`1, "INCHES"` is returned if the remote units are inches.

`2, "CM"` is returned if the remote units are centimeters.

- `PERCent`

Sets the remote units to percent.

- `INches`

Sets the remote units to inches.

- `CM`

Sets the remote units to centimeters.

5.6 Error Messages

If an error occurs, the Model 286 will beep, load the internal error buffer with the error code and description, and set the appropriate bits in the standard event and status byte registers if enabled by the user. Error codes are returned with a negative three-digit integer, then a comma, and then a description enclosed in double quotes.

Use the `SYSTem:ERRor?` query to retrieve the errors in first-in-first-out (FIFO) order. Errors are removed from the internal error buffer as they are read. The Model 286 can store up to 10 errors.

If more than 10 errors have occurred, the last error stored in the internal error buffer is replaced with `-304, "Error buffer overflow"`. No additional errors are stored until you have cleared at least one error from the buffer. If no errors have occurred and the `SYSTem:ERRor?` query is sent to the Model 286, the instrument will return:

```
0, "No errors"
```

Error strings may contain up to 80 characters. Errors are classified in the following categories: *command errors*, *query errors*, *execution errors*, and *device errors*. Each category corresponds to the identically named bit in the standard event register (see page 62). If an error occurs in any one of the categories, the corresponding bit in the standard event register is set and remains set until cleared by the user.

5.6.1 Command Errors

- `-101, "Unrecognized command"`

The command string sent was not identified as valid. Check the command string for invalid characters or separators, syntax errors, or for errors in the mnemonics. Spaces are not allowed before or after colon separators, and at least one space must separate a command string from the parameter(s).

- `-102, "Invalid argument"`

The argument provided as a parameter for the command was invalid. *Value* arguments must be of the following form:

- an optional plus or minus sign,
- a sequence of decimal digits, possibly containing a single decimal point, and
- an optional exponent part, consisting of the letter `e` or `E`, an optional sign, and a sequence of decimal digits.

Enable_value arguments must be within the inclusive range of 0 to 255.

- `-103, "Non-boolean argument"`

The command required a parameter in the form of 0 or 1. No other form of the parameter is allowed.

- `-104, "Missing parameter"`

The command required at least one argument which was not found before the termination character(s).

- `-105, "Out of range"`

At least one of the parameter values received was out of the valid range. Refer to the *Menu Reference* section beginning on page 43 for the acceptable ranges for each instrument setting.

- `-106, "Undefined length"`

The user attempted to set a parameter before a length value was specified for the assigned calibration.

- `-107, "Percent units for length"`

The user attempted to set the active length in the remote units of percent. The remote units must be inches or centimeters to set the active length.

- `-108, "Incorrect passcode"`

The user attempted to unlock the calibration and provided the incorrect passcode for the `CAL:UNLOCK` command.

- `-109, "Command not supported"`

The user sent a command to the unit that is not supported.

- `-110, "Cal is locked"`

The user attempted to modify a parameter associated with a calibration of a sensor input but failed to first unlock the calibration. See the `CAL:UNLOCK` command.

- `-111, "Invalid offset factor"`

The user sent an offset factor that was out of the acceptable range of –100% to +100%, or would result in an overflow of the internal measurement circuits.

- `-112, "Invalid approx factor"`

The user sent an approximate calibration factor that was out of the acceptable range of 10% to 1000%, or would result in an overflow of the internal measurement circuits.

5.6.2 Query Errors

- `-201, "Unrecognized query"`

The query string sent (identified as a query by a ?) was not identified as valid. Check the query string for invalid characters or separators, syntax errors, or for errors in the mnemonics. Spaces are not allowed before or after colon separators.

- `-202, "Query interrupted"`

A new query was processed before the return string of a previous query had been completely transmitted to the host. The new query clears the remaining data and replaces it with the new return string.

- `-203, "Not in mode"`

A query was sent for a parameter associated with a controller mode that was not currently active.

- `-204, "Query for length in percent"`

The operator attempted to query for the zero offset or measured span in remote units of percent. The remote units must be inches or centimeters.

5.6.3 Execution Errors

- `-301, "Input overflow"`

The four input buffers are all occupied with unprocessed commands or queries. The command or query is lost. Review the handshaking section on page 69 for directions for avoiding input overflow errors.

- `-302, "Error buffer overflow"`

More than 10 errors have occurred. For further errors to be recorded in the internal buffer, at least one error must be cleared.

- `-303, "Unknown channel id"`

An unknown channel prefix was sent to the instrument. Valid channel prefixes include `CH1`, `CH2`, `CH3`, and `CH4`.

- `-304, "No input assigned"`

A command or query was sent to a channel that currently has no assigned sensor input.

- `-305, "Incomplete cal"`

The user attempted to select an incomplete calibration as the active calibration. At least one valid MIN and MAX entry must be performed for a given calibration.

- `-306, "No input signal"`

The selected channel is not currently receiving a proper signal from the connected oscillator and/or sensor.

- `-307, "Not channel feature"`

A command or query was sent to a channel that does not offer the specific feature requested.

- `-308, "Selection out of range"`

The user attempted to select an active calibration outside of the valid range of `1` to `4`.

- `-309, "No active cal"`

A command or query was sent to a channel that currently has no calibration selected as the active calibration. If performing a calibration via the remote interface, after entry of a MIN and MAX, the `CAL:ACTIVE` command must be used to make the calibration active for a given sensor input.

- `-310, "Unavailable channel"`

The specified channel is currently unavailable (typically Channel 2 in the auto-changeover or pre-cool controller modes).

- `-311, "Invalid input id"`

An unknown sensor input prefix was sent to the instrument. Valid sensor input prefixes include `A`, `B`, `C`, and `D`.

- `-312, "AC output in use"`

The specified AC output is in use by another controller mode, and the command cannot be executed.

5.6.4 Device Errors

- `-401, "Checksum failed"`

The non-volatile memory which stores the calibration data for the Model 286 is corrupted. Contact an Authorized AMI Technical Representative for further instructions. Do not continue to use the Model 286 for level measurements.

- `-402, "Serial framing error"`

The baud rate of the Model 286 and host device are not identical. Both the Model 286 and host device must be set to the identical baud rate.

- `-403, "Serial parity error"`

The number of data bits and/or the parity of the Model 286 and the host device are not identical.

- `-404, "Serial data overrun"`

The received buffer of the Model 286 was overrun. Decrease the baud rate.

6 Service

The procedures in this section should only be performed by Qualified Service Personnel (QSP).

6.1 Model 286 Maintenance

The Model 286 is designed and manufactured to provide years of reliable service. The only routine maintenance required is to keep the exterior surfaces of the instrument clean by gently wiping with a damp cloth moistened with a mild detergent.

6.2 Model 286 Troubleshooting Hints

The following paragraphs serve as an aid to assist QSP in troubleshooting a potential problem with the Model 286. If the QSP is not comfortable with troubleshooting the system, contact an Authorized AMI Technical Support Representative for assistance. Refer to “Additional Technical Support” on page 95.

This instrument contains CMOS components which are susceptible to damage by Electrostatic Discharge (ESD). Take the following precautions whenever the cover of the instrument is removed.

1. Disassemble the instrument only in a static-free work area.
2. Use a conductive workstation or work area to dissipate static charge.
3. Use a high resistance grounding wrist strap to reduce static charge accumulation.
4. Ensure all plastic, paper, vinyl, Styrofoam® and other static generating materials are kept away from the work area.
5. Minimize the handling of the instrument and all static sensitive components.
6. Keep replacement parts in static-free packaging.
7. Do not slide static-sensitive devices over any surface.
8. Use only antistatic-type desoldering tools.

9. Use only grounded-tip soldering irons.

6.2.1 The Model 286 does not appear to be energized with the power switch in the POWER (I) position.

1. Ensure that the Model 286 is energized from a power source of proper voltage.

   Warning

   If the instrument has been found to have been connected to an incorrect power source, return the instrument to AMI for evaluation to determine the extent of the damage. Frequently, damage of this kind is not visible and must be determined using test equipment. Connecting the instrument to an incorrect power source could damage the internal insulation and/or the ground conductors, thereby, possibly presenting a severe life-threatening electrical hazard.

2. Verify continuity of the line fuse, F1, located on the instrument printed circuit board.

   Warning

   This procedure is to be performed only when the instrument is completely de-energized by removing the power-cord from the power receptacle. Failure to do so could result in personnel coming in contact with high voltages capable of producing life-threatening electrical shock.

   a. Ensure the instrument is de-energized by disconnecting the power cord from the power source. Disconnect the power cord from the connector located on the rear panel of the instrument.

   b. Remove the instrument top cover and check the fuse F1 for continuity.

   c. If the fuse is open, replace with a fuse of identical rating.

   Caution

   Installing fuses of incorrect values and ratings could result in damage to the instrument in the event of component failure.

   Note

   The proper fuse for this instrument is a 315 mA IEC 127-2 Type F sheet II 5x20mm. The fuse will be labeled with the current rating and marked with an F to denote fast-acting.

d. Replace the fuse and securely fasten the instrument top cover. Reconnect the power-cord.

3. Verify the input voltage selector switch (S1) on the instrument's printed circuit board is in the proper position for the available input power. For 100 to 120 VAC input "115V" should be visible in the switch window; for 200 to 240 VAC input "230V" should be visible in the switch window. Checking the input voltage selector requires removal of the top cover of the instrument. Observe the same safety procedures as presented in step 2, above.

4. If the display appears blank but the instrument power-up appears otherwise normal (all the LEDs energized), then the contrast of the LCD display may need adjustment. The LCD display should always be visible (especially when looking up at the unit), but may be only faintly visible if set to a low contrast percentage. See paragraph 4.3.12.2 on page 55 for specific directions for adjusting the display contrast; the display may have to be viewed from either a sharp upward or a sharp downward angle to be legible until the contrast is properly adjusted.

6.2.2 The Model 286 level reading is erratic or erroneous

1. If the erratic or erroneous reading is for inputs C or D, which require an external oscillator, verify that the sensor is properly connected to the oscillator cable and the extension cable (see the system diagram on page 5).

2. Verify that cabling has no breaks or cuts.

3. If the erratic or erroneous reading is for inputs C or D, which require an external oscillator, ensure the erroneous input's oscillator unit is not exposed to large temperature variations such as those that occur near dewar vents. Extreme temperature changes of the oscillator unit can cause readout errors.

4. Rapidly varying or sloshing liquids will sometimes make one think the instrument is in error when it is actually operating properly.

5. Capacitance-based sensors used in cryogenic liquid systems are sometimes exposed to humidified air when the cryogenic vessel is emptied. This often happens when a cold trap runs out of liquid. As the sensor warms, the electronics can show large errors (readings greater than 20% are not uncommon). This is due to the fact that air contains moisture that will condense between the cold sensing tubes. This small film of moisture can cause a shorted or partially shorted condition. The electronics may recognize this as a higher level reading and display some positive level. As the sensor warms over some period of time, the moisture can evaporate and the

sensor will again approach the correct reading of 0%. This condition can also be corrected immediately if liquid nitrogen is added to the cold trap freezing the residual moisture. This is a physical phenomenon and does not indicate any problem with your AMI level equipment.

6. Verify the sensor is free of contaminants and is not subject to any physical distortion. Disconnect the BNC connector at the top of the sensor and measure the sensor resistance by placing an ohmmeter across the center pin and the outer barrel of the connector. The resistance of the sensor should typically be >10 MΩ.

6.2.3 One of the Model 286 channels reads `<No inp>` instead of displaying the level

1. Confirm that the input for the channel displaying `<No inp>` is properly connected to a sensor and oscillator, and that the correct end of the oscillator is connected to the sensor (see markings on oscillator).

2. Check the cable between the oscillator and the instrument to be sure that it has no breaks or cuts.

3. There is a possibility of moisture in the connector at the top of the sensor associated with the channel displaying `<No inp>`. Disconnect the BNC connection and remove any moisture. Moisture or contaminants in any of the BNC coaxial connectors can short out the sensor and cause a false `<No inp>` reading or other erroneous readings. A pack of non-conductive electrical connection lubricant (ECL or "Dielectric Tune-up Grease") has been included with the liquid level sensor packaging to reduce the possibility of this occurring. Apply a small amount of ECL to any of the BNC connectors that may be exposed to moisture. Mate the ECL-coated connectors then remove any excess ECL from the outside of the connector. Added protection can be achieved by covering the ECL-coated connections with a short section of heat-shrink tubing.

Note

MSDS sheets for the ECL are available upon request.

6.2.4 One of the Model 286 channels reads `<No cal>` instead of displaying the level

The `<No cal>` display indicates that the input which has been assigned to the channel has not been calibrated. Check to make sure that the intended input (A, B, C or D) is assigned to the channel. If it is, then the input must be calibrated — see the *Calibration* section beginning on page 17.

6.2.5 One of the Model 286 channels reads <No MIN> instead of displaying the level

The <No MIN> display indicates that the input assigned to the channel has not been fully calibrated. For the input assigned to the channel, the MAX has been calibrated, but not the MIN. Check to make sure that the intended input (A, B, C or D) is assigned to the channel and that the intended calibration selection (1, 2, 3, or 4) is active. If it is, then the input calibration must be completed — see the *Calibration* section beginning on page 17.

6.2.6 One of the Model 286 channels reads <No MAX> instead of displaying the level

The <No MAX> display indicates that the input assigned to the channel has not been fully calibrated. For the input assigned to the channel, the MIN has been calibrated, but not the MAX. Check to make sure that the intended input (A, B, C or D) is assigned to the channel and that the intended calibration selection (1, 2, 3, or 4) is active. If it is, then the input calibration must be completed — see the *Calibration* section beginning on page 17.

6.2.7 The Model 286 will not allow an input to be assigned to channel 2

Channel 2 is unavailable for use in auto-changeover mode and pre-cool mode. In these two modes, channel 1 is the primary control channel, and channels 3 and 4 are available for use, but not channel 2.

6.2.8 Controller output does not energize

Warning

This procedure is to be performed only when the instrument is completely de-energized by removing the power-cord from the power receptacle. Failure to do so could result in personnel coming in contact with high voltages capable of producing life-threatening electrical shock.

1. Verify continuity of controller output fuses (F2, F3, F4 and F5) located on the instrument printed circuit board.

   a. Ensure the instrument is de-energized by disconnecting the power cord from the power source. Disconnect the power cord from the connector located on the rear panel of the instrument.

   b. Remove the instrument top cover and check the fuses F2, F3, F4 and F5 for continuity.

c. If a fuse is open, replace it with a 2.5A IEC 127-2 Type F Sheet II 5x20mm fuse.

d. Check your connected equipment for compliance with the output receptacle rating.

Caution

Installing fuses of incorrect values and ratings could result in damage to the instrument in the event of component failure.

2. Replace the fuse(s) if needed and securely fasten the instrument top cover. Reconnect the power-cord.

6.2.9 The Model 286 does not remember the alarm setpoints after power is removed

Contact an Authorized AMI Support Representative. This condition indicates failure of the non-volatile memory internal to the microprocessor.

6.2.10 The Model 286 is not responding to remote communications commands

1. Verify your communications cable integrity and wiring. See the *Appendix* for RS-232/422 connector pinouts.

2. Check to make sure you are sending the correct termination characters to the instrument. If you are using the RS-232 or the RS-422 option, make sure the baud rate, number of stop bits, and data bits/parity settings match. If you are using the IEEE-488 option, check the primary address setting and make sure the controller software is set to query the instrument at the primary address selected.

3. Check your host communications software and make sure it is recognizing the return termination characters from the instrument. For RS-232 communication, the return termination characters are <*CR*><*LF*>. For IEEE-488, the return message termination characters are <*LF*> with EOI.

4. If the instrument is responding repeatedly with errors, try a device clear command (DCL) or powering the instrument off and then back on. Be sure you are sending valid commands.

If you experience continued trouble with the IEEE-488 interface, you may have an incompatible IEEE-488 card in your host computer. In the past, AMI has found subtle differences between manufacturers of IEEE-488

cards that have introduced communication errors. AMI attempts to establish compatibility with as many products as possible, however it is difficult to test every card available. Contact AMI directly if you have thoroughly checked your setup and continue to experience problems with the IEEE-488 interface.

6.3 Modifying the Line Voltage Input Range

Warning

Before removing the cover of the instrument, remove the power from the instrument by disconnecting the power cord from the power receptacle. Failure to do this could expose the user to high voltages and could result in life-threatening electrical shock.

Caution

The Model 286 instrument operates on 50-60 Hz power and may be configured for 100-120 or 200-240 VAC ±10%. The power requirements for each instrument are marked on the rear panel. Be sure the instrument's power requirements match your power source prior to plugging in the line cord. Do not fail to connect the input ground terminal securely to an external earth ground.

If the instrument operating voltage range needs to be changed, ensure the instrument is de-energized by disconnecting the power cord from the power source. Remove the instrument cover and slide the voltage selector switch (S1) on the main printed circuit board to the proper voltage; for 100 to 120 VAC input “115V” should be visible in the switch window and for 200 to 240 VAC input “230V” should be visible in the switch window. Replace the instrument cover and *indelibly mark the rear panel indications to match the new configuration.*

6.4 Additional Technical Support

If the cause of a problem cannot be located, contact an AMI Technical Support Representative at (865) 482-1056 for assistance. The AMI technical support group may also be reached by Internet e-mail at **support@americanmagnetics.com**. Additional technical information, latest software releases, etc. are available at the AMI World Wide Web site at:

http://www.americanmagnetics.com

Do not return the Model 286 or other AMI system components to AMI without prior return authorization.

6.5 Return Authorization

Items to be returned to AMI for repair (warranty or otherwise) require a return authorization number to ensure your order will receive proper attention. Please call an AMI representative at (865) 482-1056 for a return authorization number before shipping any item back to the factory.

Appendix

A.1 4-20 mA Current Loop Option

The 4-20 mA output utilizes pins 3 and 4 of connector J5A for Channel 1, and pins 3 and 4 of connector J5B of connector J5B for Channel 2. These are self-powered current loop outputs (they require no external power supply). Refer to the figure below for wiring details. The 4-20 mA output has a maximum compliance of 11.5 VDC. If the 4-20 mA option is installed for a given channel, the 0-10 VDC output for that channel is not available.

Note

For maximum immunity to external electrical and electromagnetic disturbances, all external cabling (except for the AC input, AC outputs, and coaxial cabling) should be shielded. Each cable shield should be connected to the chassis of the instrument by connecting to the respective D-sub connector shell.

In the wiring diagram below, connections to the instrument indicate connector J5A. The same connections hold true for connector J5B, provided the current loop option was also purchased for that channel.

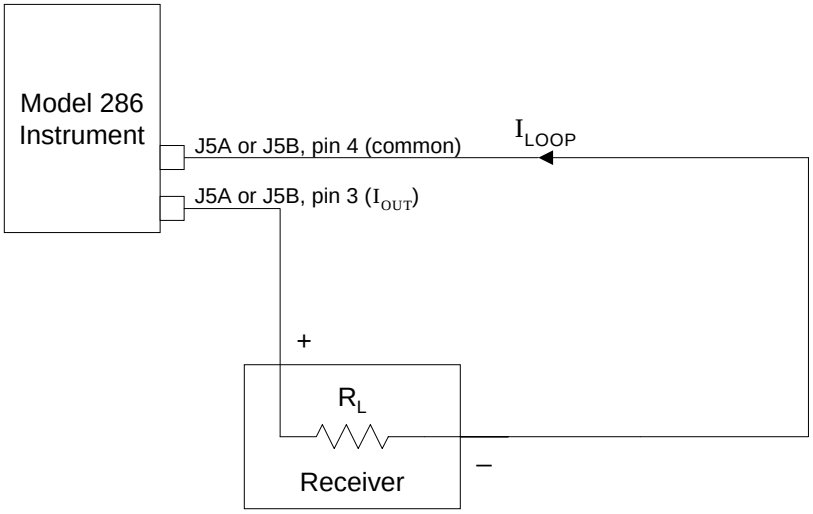

A.2 J5A and J5B Connector Pinout

J5A or J5B Pin	Function
1 & 2	Remote contact sense (input)
3	Optional 4-20 mA current loop output or 0-10 VDC output
4	Analog output common
5 & 6	LO alarm relay contacts (dry)
7 & 8	HI alarm relay contacts (dry)
9	Reserved for future use (do not connect to this pin)

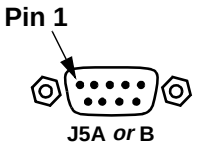

Note

For maximum immunity to external electrical and electromagnetic disturbances, all external cabling (except for the AC input, controller output, and coaxial cabling) should be shielded. The cable shield should be connected to the chassis of the instrument by connecting to the D-sub connector shell.

The pinouts for connectors J5A and J5B are identical. Signals within J5A are always associated with channel 1, and signals within J5B are always associated with channel 2, with only one exception. The exception is this — when contact outputs are assigned to channels 3 and 4, then the relay contacts (pins 5, 6, 7 and 8) within J5A are associated with channel 3 HI and LO alarms (other signals with J5A remain associated with channel 1), and the relay contacts (pins 5, 6, 7 and 8) within J5B are associated with channel 4 HI and LO alarms (other signals within J5B remain associated with channel 2). See paragraph 4.3.10.2 on page 53 for the ASN menu item for assigning the HI and LO contact outputs to Channels 1 & 2 or Channels 3 & 4.

The HI and LO alarm contacts are provided for external use by the user. When a HI or LO alarm condition exists, the respective contact pairs are closed. The HI and LO alarms provide 0.05% hysteresis, however the respective contact pairs still may “chatter” if the liquid sloshes, bubbles, etc.

The HI level and LO alarm contacts also provide positive indication of a power-off condition. With a power-off condition, *both* the HI and LO alarm contacts will be closed for a given channel, which is a state unique to the power-off condition.

The following table provides the specifications for the HI and LO alarm relay contacts (pins 5, 6, 7 and 8):

Max switching VA	10 VA
Max switching voltage	30 VAC or 60 VDC
Max switching current	0.5 A
Max continuous current	1.5 A

The instrument provides a maximum voltage across pins 1 and 2 of connectors J5A and J5B of 5.25 VDC for a connected remote contact in the open state. With a connected remote contact in the closed state, the contact current supplied by the Model 286 will not exceed 5.5 mA.

The remote contact sense can be used as a fill inhibit indicator (see paragraph 4.3.7.3 on page 47). Both remote contact senses can also be used in the auto-changeover mode to indicate if the storage vessels contain liquid (see paragraph 4.3.8.3 on page 49).

A.3 IEEE-488 Connector (optional)

Table A-1. IEEE-488 female connector description.

Pin	Mnemonic	Description
1	DIO1	Data In/Out Bit 1
2	DIO2	Data In/Out Bit 2
3	DIO3	Data In/Out Bit 3
4	DIO4	Data In/Out Bit 4
5	EOI	End or Identify
6	DAV	Data Valid
7	NRFD	Not Ready for Data
8	NDAC	Not Data Accepted
9	IFC	Interface Clear
10	SRQ	Service Request
11	ATN	Attention
12	SHIELD	Cable Shield
13	DIO5	Data In/Out Bit 5
14	DIO6	Data In/Out Bit 6
15	DIO7	Data In/Out Bit 7
16	DIO8	Data In/Out Bit 8
17	REN	Remote Enable
18	GND	Ground, Twisted pair with DAV
19	GND	Ground, Twisted Pair with NRFD
20	GND	Ground, Twisted Pair with NDAC
21	GND	Ground, Twisted Pair with IFC
22	GND	Ground, Twisted Pair with SRQ
23	GND	Ground, Twisted Pair with ATN
24	SGND	Signal Ground

A.4 RS-232 Connector (optional)

Table A-2. PC (DB-25)-to-Model 286 connections for **RS-232** operation.

PC (DTE) DB-25 Pin	**Model 286 (DCE)** DB-25 Pin	**DTE Function**
2	2	TD
3	3	RD
4	4	RTS
5	5	CTS
6	6	DSR
7	7	GND
8	8	DCD
20	20	DTR
22	22	RI

Table A-3. PC (DB-9)-to-Model 286 connections for **RS-232** operation.

PC (DTE) DB-9 Pin	**Model 286 (DCE)** DB-25 Pin	**DTE Function**
3	2	TD
2	3	RD
7	4	RTS
8	5	CTS
6	6	DSR
5	7	GND
1	8	DCD
4	20	DTR
9	22	RI

A.5 RS-422 Connector (optional)

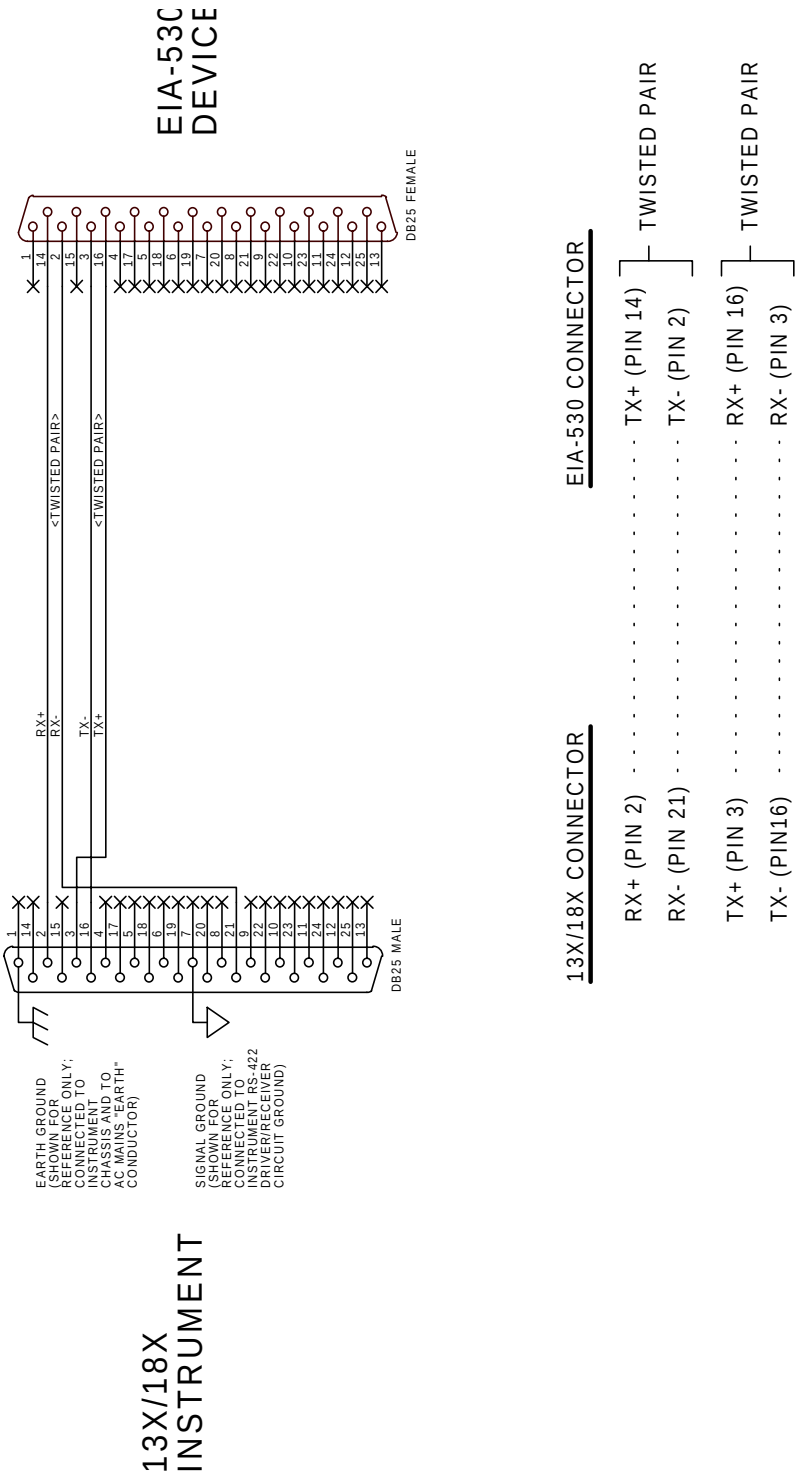

Index

A
AC output warnings 14
AMI Internet e-mail address 95
AMI WWW address 95
applicable hardware viii
approximate calibration factor 27
audible alarm 38, 54
auto-changeover mode
    AC outputs 48
    changeover time 49
    empty detection 49
    fill timeout 50
auto-fill cycle 40, 48, 50

C
CAL menu
    action 30
    active 31
    active length 33
    approx cal factor 31
    MIN/MAX entry 34
    passcode 30
    perform 33
    sensor input select 30
    zero offset factor 32
calibration
    approximate calibration 26
    closed dewar calibration 22
    method selection diagram 20
    methods 19
    open dewar calibration 21
    passcode entry 30
    presetting MAX/MIN 22
cleaning a sensor 42
cleaning the instrument 89
configuration
    A setpoint 45
    A/B control band 39
    AC outputs 40
    alarm contacts 53
    B setpoint 46
    controller mode 53
    display contrast 55
    fill mode 46
    fill timeout 41
    HI setpoint 38, 44
    LO setpoint 38, 45
    muting alarms 54
    RATE alarm 46
    remote units 81
    sensor inputs 53
    units 38
connectors
    alarm contacts 44
    IEEE-488 100
    J5A and J5B 98
    RS-232 101
    RS-422 102
current loop option
    compliance 97
    diagram 97

D
default displays 43
description of modes 7
dielectric definition 18
dielectric shifts 17
display
    level 43
    rate alarm symbol 46
    usage 43
    usage trend 43
display contrast 55

E
entering values 44
ESD precautions 89
external cable shields 98

F
feature matrix 56
features 1
front panel layout 3

H
HI/LO contacts specs 99

I
IEEE-488 configuration 71
    device clear 71
    primary address 55
    SRQ 64
    termination characters 71
input voltage configuration 15
installation
    analog outputs 15
    communications 15
    fill valves 14
    rack mounting 12
    sensor cables 13
    sensors 12
    unpacking 11
    voltage requirements 15

K
keys
    0-CAL 30
    1-HI 44
    2-LO 45
    3-A 45
    4-B 46
    5-RATE 46
    6-FILL 46
    7-ASN 53
    8-MODE 53

Index

9-MISC 54
ENTER 44
ESC 43, 44
MENU 43
OPTION 44

L

LED
FILL 47, 48, 51
HI/LO 44, 45
line voltage input range, modifying 95

M

maintenance 89
MAX 35
menus
accessing 43
exiting 43, 44
mode selection 53
reference 43
screens 43
selecting options 44
method of measurement 17
MIN 34
modes
auto-changeover 8
normal 7
pre-cool 9

N

normal mode
fill inhibit 47
fill modes 47
fill timeout 47
null input selection 53

P

pre-cool mode
AC outputs 51
fill timeout 51
pre-cool time 52

R

rack mounting 12
rear panel layout 4
remote contact sense 99
remote interface reference 57
alarm registers 66
command conventions 57
command handshaking 69
command reference 72
alarm commands 75
assign commands 79
cal commands 80
calibration 80
fill commands 76
level and usage rate 76
remote units 81
status commands 73
system commands 72
command summary 57- 60
error messages 83
measurement registers 67
message available bit(s) 65
overview 61
SCPI intro 61
serial polling 64
standard event register 65
status byte 63
status system 61
status system diagram 62
return authorization 96
RS-232/422 configuration 70
baud rate 55
connector 70
termination characters 71

S

safety
cryogens viii
equipment x
legend x
selected channel 43
sensor connections 13
sensor contamination 42
sensor installation 12
sensor-to-channel assign 53
specifications 6
summary of features 56
system diagram 5

T

troubleshooting
assignment to channel 2 not allowed 93
communication failures 94
contacting AMI support 95
display contrast 91
erratic or erroneous display 91
moisture in connector 92
no cal 92
no controller output 93
no inp 92
no MAX 93
no MIN 93
no power 90
replacing the fuse 90
voltage selector 91

U

unpacking 11
usage estimate 46