USB-TEMP

USB-based 8-channel Temperature Measurement Module

User's Guide

MEASUREMENT COMPUTING™

USB-TEMP

USB-based High-Precision 8-Channel Temperature Measurement Module

User's Guide

MEASUREMENT COMPUTING™

Document Revision 6, June, 2006
© Copyright 2006, Measurement Computing Corporation

Your new Measurement Computing product comes with a fantastic extra —

Management committed to your satisfaction!

Refer to www.mccdaq.com/execteam.html for the names, titles, and contact information of each key executive at Measurement Computing.

Thank you for choosing a Measurement Computing product—and congratulations! You own the finest, and you can now enjoy the protection of the most comprehensive warranties and unmatched phone tech support. It's the embodiment of our two missions:

- To offer the highest-quality, computer-based data acquisition, control, and GPIB hardware and software available—at the best possible price.
- To offer our customers superior post-sale support—FREE. Whether providing unrivaled telephone technical and sales support on our latest product offerings, or continuing that same first-rate support on older products and operating systems, we're committed to you!

Lifetime warranty: Every hardware product manufactured by Measurement Computing Corporation is warranted against defects in materials or workmanship for the life of the product. Products found defective are repaired or replaced promptly.

Lifetime Harsh Environment Warranty®: We will replace any product manufactured by Measurement Computing Corporation that is damaged (even due to misuse) for only 50% of the current list price. I/O boards face some tough operating conditions—some more severe than the boards are designed to withstand. When a board becomes damaged, just return the unit with an order for its replacement at only 50% of the current list price. We don't need to profit from your misfortune. By the way, we honor this warranty for any manufacturer's board that we have a replacement for.

30 Day Money Back Guarantee: You may return any Measurement Computing Corporation product within 30 days of purchase for a full refund of the price paid for the product being returned. If you are not satisfied, or chose the wrong product by mistake, you do not have to keep it. Please call for an RMA number first. No credits or returns accepted without a copy of the original invoice. Some software products are subject to a repackaging fee.

These warranties are in lieu of all other warranties, expressed or implied, including any implied warranty of merchantability or fitness for a particular application. The remedies provided herein are the buyer's sole and exclusive remedies. Neither Measurement Computing Corporation, nor its employees shall be liable for any direct or indirect, special, incidental or consequential damage arising from the use of its products, even if Measurement Computing Corporation has been notified in advance of the possibility of such damages.

Trademark and Copyright Information

TracerDAQ, Universal Library, Harsh Environment Warranty, Measurement Computing Corporation, and the Measurement Computing logo are either trademarks or registered trademarks of Measurement Computing Corporation.

Windows, Microsoft, and Visual Studio are either trademarks or registered trademarks of Microsoft Corporation

LabVIEW is a trademark of National Instruments.

CompactFlash is a registered trademark of SanDisk Corporation.

All other trademarks are the property of their respective owners.

Information furnished by Measurement Computing Corporation is believed to be accurate and reliable. However, no responsibility is assumed by Measurement Computing Corporation neither for its use; nor for any infringements of patents or other rights of third parties, which may result from its use. No license is granted by implication or otherwise under any patent or copyrights of Measurement Computing Corporation.

All rights reserved. No part of this publication may be reproduced, stored in a retrieval system, or transmitted, in any form by any means, electronic, mechanical, by photocopying, recording, or otherwise without the prior written permission of Measurement Computing Corporation.

Notice

Measurement Computing Corporation does not authorize any Measurement Computing Corporation product for use in life support systems and/or devices without prior written consent from Measurement Computing Corporation. Life support devices/systems are devices or systems which, a) are intended for surgical implantation into the body, or b) support or sustain life and whose failure to perform can be reasonably expected to result in injury. Measurement Computing Corporation products are not designed with the components required, and are not subject to the testing required to ensure a level of reliability suitable for the treatment and diagnosis of people.

Table of Contents

Preface
About this User's Guide vi
What you will learn from this user's guide vi
Conventions in this user's guide vi
Where to find more information vi

Chapter 1
Introducing the USB-TEMP 1-1
Overview: USB-TEMP features 1-1
USB-TEMP block diagram 1-2
Software features 1-2
Connecting a USB-TEMP to your computer is easy 1-3

Chapter 2
Installing the USB-TEMP 2-1
What comes with your USB-TEMP shipment? 2-1
Hardware 2-1
Additional documentation 2-1
Unpacking the USB-TEMP 2-1
Installing the software 2-2
Installing the USB-TEMP 2-2
Configuring the USB-TEMP 2-2
Calibrating the USB-TEMP 2-2

Chapter 3
Sensor Connections 3-1
Screw terminal pin out 3-1
Sensor input terminals (C0H/C0L to C7H/C7L) 3-2
Current excitation output terminals (±I1 to ±I4) 3-3
Four-wire, two sensor common terminals (4W01 to 4W67) 3-3
Two sensor common terminals (IC01 to IC67) 3-3
Ground terminals (GND) 3-3
Power terminals (+5V) 3-3
Digital terminals (DIO0 to DIO7) 3-3
CJC sensors 3-3
Thermocouple connections 3-3
Wiring configuration 3-4
RTD and thermistor connections 3-4
Two-wire configuration 3-5
Three-wire configuration 3-6
Four-wire configuration 3-6
Semiconductor sensor measurements 3-7
Wiring configuration 3-7
Digital I/O connections 3-8

Chapter 4
Functional Details 4-1
Thermocouple measurements 4-1
Cold junction compensation (CJC) 4-1
Data linearization 4-1
Open-thermocouple detection (OTD) 4-1
RTD and thermistor measurements 4-2
Data linearization 4-2
USB connector 4-2

LED 4-2
Power 4-2

Chapter 5
Specifications 5-1
Analog input 5-1
Channel configurations 5-2
Compatible sensors 5-2
Accuracy 5-3
Thermocouple measurement accuracy 5-3
Semiconductor sensor measurement accuracy 5-3
RTD measurement accuracy 5-4
Thermistor measurement accuracy 5-4
Throughput rate 5-5
Digital input/output 5-6
Memory 5-6
Microcontroller 5-6
USB +5V voltage 5-6
Power 5-7
USB specifications 5-7
Current excitation outputs (Ix+) 5-8
Environmental 5-8
Mechanical 5-8
Screw terminal connector type and pin out 5-9
Screw terminal pin out 5-9

About this User's Guide

What you will learn from this user's guide

This user's guide explains how to install, configure, and use the USB-TEMP so that you get the most out of its USB-based temperature measurement features.

This user's guide also refers you to related documents available on our web site, and to technical support resources.

Conventions in this user's guide

For more information on …

Text presented in a box signifies additional information and helpful hints related to the subject matter you are reading.

Caution! Shaded caution statements present information to help you avoid injuring yourself and others, damaging your hardware, or losing your data.

<#:#> Angle brackets that enclose numbers separated by a colon signify a range of numbers, such as those assigned to registers, bit settings, etc.

bold text **Bold** text is used for the names of objects on the screen, such as buttons, text boxes, and check boxes. For example:
1. Insert the disk or CD and click the **OK** button.

italic text *Italic* text is used for the names of manuals and help topic titles, and to emphasize a word or phrase. For example:
The *Insta*Cal installation procedure is explained in the *Quick Start Guide*.
Never touch the exposed pins or circuit connections on the board.

Where to find more information

The following electronic documents provide helpful information relevant to the operation of the USB-TEMP.

- MCC's *Specifications: USB-TEMP* (the PDF version of the *Specifications* chapter in this guide) is available on our web site at www.mccdaq.com/pdfs/USB-TEMP.pdf.
- MCC's *Quick Start Guide* is available on our web site at www.mccdaq.com/PDFmanuals/DAQ-Software-Quick-Start.pdf.
- MCC's *Guide to Signal Connections* is available on our web site at www.mccdaq.com/signals/signals.pdf.
- MCC's *Universal Library User's Guide* is available on our web site at www.mccdaq.com/PDFmanuals/sm-ul-user-guide.pdf.
- MCC's *Universal Library Function Reference* is available on our web site at www.mccdaq.com/PDFmanuals/sm-ul-functions.pdf.
- MCC's *Universal Library for LabVIEW™ User's Guide* is available on our web site at www.mccdaq.com/PDFmanuals/SM-UL-LabVIEW.pdf.

USB-TEMP User's Guide (this document) is also available on our web site at www.mccdaq.com/PDFmanuals/USB-TEMP.pdf.

Introducing the USB-TEMP

Overview: USB-TEMP features

This user's guide contains all of the information you need to connect the USB-TEMP to your computer and to the signals you want to measure.

The USB-TEMP is a USB 2.0 full-speed, temperature measurement module that is supported under popular Microsoft® Windows® operating systems. The USB-TEMP is fully compatible with both USB 1.1 and USB 2.0 ports.

The USB-TEMP provides eight differential input channels that are software programmable for different sensor categories including thermocouple, RTD's, thermistors and Semiconductor sensors. Eight independent, TTL-compatible digital I/O channels are provided to monitor TTL-level inputs, communicate with external devices, and to generate alarms. The digital I/O channels are software programmable for input or output.

With the USB-TEMP, you can take measurements from four sensor categories:

- Thermocouple – types J, K, R, S, T, N, E, and B
- Resistance temperature detectors (RTDs) – 2, 3, or 4-wire measurements of 100 Ω platinum RTDs
- Thermistors – 2, 3, or 4-wire measurements
- Semiconductor temperature sensors – LM36 or equivalent

The USB-TEMP provides a 24-bit analog-to-digital (A/D) converter for each pair of differential analog input channels. Each pair of differential inputs constitutes a channel pair.

You can connect a different category of sensor to each channel pair, but you can not mix categories among the channels that constitute a channel pair (although it is permissible to mix thermocouple types).

The USB-TEMP provides two integrated cold junction compensation (CJC) sensors for thermocouple measurements, and built-in current excitation sources for resistive sensor measurements.

An open thermocouple detection feature lets you detect a broken thermocouple. An on-board microprocessor automatically linearizes the measurement data according to the sensor category.

The USB-TEMP is a standalone plug-and-play module which draws power from the USB cable. No external power supply is required. All configurable options are software programmable.

The USB-TEMP is fully software calibrated.

USB-TEMP block diagram

USB-TEMP functions are illustrated in the block diagram shown here.

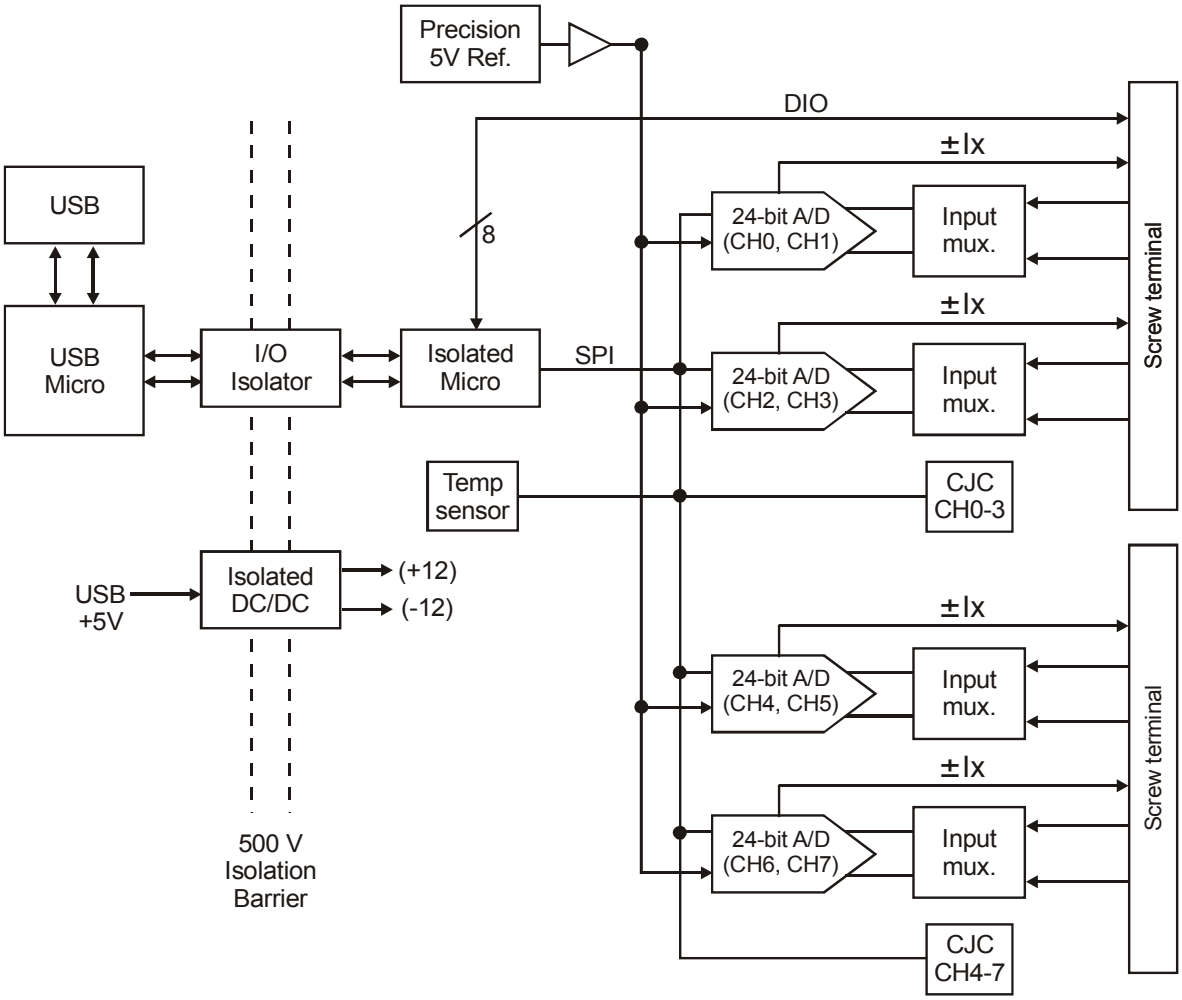

Figure 1-1. USB-TEMP functional block diagram

Software features

For information on the features of *Insta*Cal and the other software included with your USB-TEMP, refer to the *Quick Start Guide* that shipped with your device. The *Quick Start Guide* is also available in PDF at www.mccdaq.com/PDFmanuals/DAQ-Software-Quick-Start.pdf.

Check www.mccdaq.com/download.htm for the latest software version or versions of the software supported under less commonly used operating systems.

Connecting a USB-TEMP to your computer is easy

Installing a data acquisition device has never been easier.

- The USB-TEMP relies upon the Microsoft Human Interface Device (HID) class drivers. The HID class drivers ship with every copy of Windows that is designed to work with USB ports. We use the Microsoft HID because it is a standard, and its performance delivers full control and maximizes data transfer rates for your USB-TEMP. No third-party device driver is required.
- The USB-TEMP is plug-and-play. There are no jumpers to position, DIP switches to set, or interrupts to configure.
- You can connect the USB-TEMP before or after you install the software, and without powering down your computer first. When you connect an HID to your system, your computer automatically detects it and configures the necessary software. You can connect and power multiple HID peripherals to your system using a USB hub.
- You can connect your system to various devices using a standard four-wire cable. The USB connector replaces the serial and parallel port connectors with one standardized plug and port combination.
- You do not need a separate power supply module. The USB automatically delivers the electrical power required by each peripheral connected to your system.
- Data can flow two ways between a computer and peripheral over USB connections.

Installing the USB-TEMP

What comes with your USB-TEMP shipment?

The following items are shipped with the USB-TEMP.

Hardware

- USB-TEMP

- USB cable (2 meter length)

Additional documentation

In addition to this hardware user's guide, you should also receive the *Quick Start Guide* (available in PDF at www.mccdaq.com/PDFmanuals/DAQ-Software-Quick-Start.pdf). This booklet supplies a brief description of the software you received with your USB-TEMP and information regarding installation of that software. Please read this booklet completely before installing any software or hardware.

Unpacking the USB-TEMP

As with any electronic device, you should take care while handling to avoid damage from static electricity. Before removing the USB-TEMP from its packaging, ground yourself using a wrist strap or by simply touching the computer chassis or other grounded object to eliminate any stored static charge.

If your USB-TEMP is damaged, notify Measurement Computing Corporation immediately by phone, fax, or e-mail. For international customers, contact your local distributor where you purchased the USB-TEMP.

- Phone: 508-946-5100 and follow the instructions for reaching Tech Support.
- Fax: 508-946-9500 to the attention of Tech Support
- Email: techsupport@mccdaq.com

Installing the software

Refer to the *Quick Start Guide* for instructions on installing the software on the *Measurement Computing Data Acquisition Software CD*. This booklet is available in PDF at www.mccdaq.com/PDFmanuals/DAQ-Software-Quick-Start.pdf.

Installing the USB-TEMP

To connect the USB-TEMP to your system, turn your computer on, and connect the USB cable to a USB port on your computer or to an external USB hub that is connected to your computer. The USB cable provides power and communication to the USB-TEMP.

When you connect the USB-TEMP for the first time, a **Found New Hardware** popup balloon (Windows XP) or dialog (other Windows versions) opens as the USB-TEMP is detected.

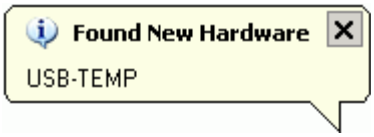

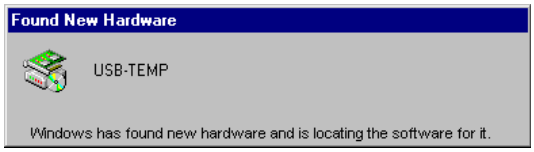

When this balloon or dialog closes, the installation is complete. The **USB LED** should flash and then remain lit. This indicates that communication is established between the USB-TEMP and your computer.

Caution! Do not disconnect **any** device from the USB bus while the computer is communicating with the USB-TEMP, or you may lose data and/or your ability to communicate with the USB-TEMP.

If the LED turns off

If the LED is lit but then turns off, the computer has lost communication with the USB-TEMP. To restore communication, disconnect the USB cable from the computer, and then reconnect it. This should restore communication, and the LED should turn back *on*.

Configuring the USB-TEMP

All hardware configuration options on the USB-TEMP are programmable with software. Use *Insta*Cal to set the sensor type for each channel. The configurable options dynamically update according to the selected sensor category. Configuration options are stored on the USB-TEMP 's isolated microcontroller in EEPROM, which is non-volatile memory on the USB-TEMP module. Configuration options are loaded on power up.

Default configuration

The factory default configuration is *Disabled*. The Disabled mode disconnects the analog inputs from the terminal blocks and internally grounds all of the A/D inputs. This mode also disables each of the current excitation sources.

Warm up

Allow the USB-TEMP to warm up for 30 minutes before taking measurements. This warm up time minimizes thermal drift and achieves the specified rated accuracy of measurements.

For RTD or thermistor measurements, this warm-up time is also required to stabilize the internal current reference.

Calibrating the USB-TEMP

The USB-TEMP is fully calibrated via software. *Insta*Cal prompts you to run its calibration utility when you change from one sensor category to another.

Allow the USB-TEMP to operate for at least 30 minutes before calibrating. This warm up time minimizes thermal drift and achieves the specified rated accuracy of measurements.

Sensor Connections

The USB-TEMP supports the following temperature sensor types:

- Thermocouple – types J, K, R, S, T, N, E, and B
- Resistance temperature detectors (RTDs) – 2, 3, or 4-wire measurement modes of 100 Ω platinum RTDs.
- Thermistors – 2, 3, or 4-wire measurement modes.
- Semiconductor temperature sensors – LM36 or equivalent

Sensor selection

The type of sensor you select will depend on your application needs. Review the temperature ranges and accuracies of each sensor type to determine which is best suited for your application.

Screw terminal pin out

The USB-TEMP has four rows of screw terminals — two rows on the top edge of the housing, and two rows on the bottom edge. Each row has 26 connections. Between each bank of screw terminals are two integrated CJC sensors used for thermocouple measurements. Signals are identified in Figure 3-1.

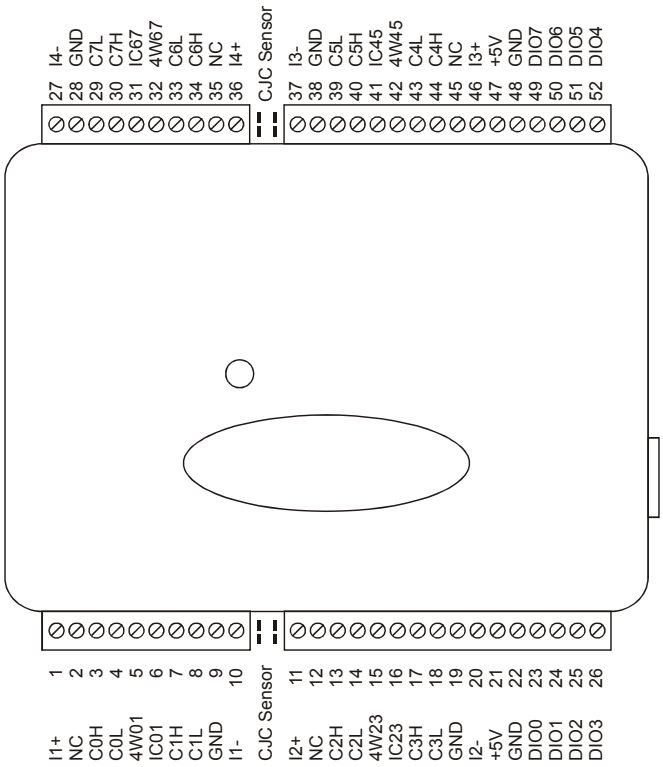

Figure 3-1. USB-TEMP screw terminal pin numbers

Table 3-1. USB-TEMP screw terminal descriptions

Pin	Signal Name	Pin Description	Pin	Signal Name	Pin Description
1	I1+	CH0/CH1 current excitation source	27	I4-	CH6/CH7 current excitation return
2	NC	Not connected	28	GND	Ground
3	C0H	CH0 sensor input (+)	29	C7L	CH7 sensor input (-)
4	C0L	CH0 sensor input (-)	30	C7H	CH7 sensor input (+)
5	4W01	CH0/CH1 4-wire, 2 sensor common	31	IC67	CH6/CH7 2 sensor common
6	IC01	CH0/CH1 2-sensor common	32	4W67	CH6/CH7 4-wire, 2 sensor common
7	C1H	CH1 sensor input (+)	33	C6L	CH6 sensor input (-)
8	C1L	CH1 sensor input (-)	34	C6H	CH6 sensor input (+)
9	GND	Ground	35	NC	Not connected
10	I1-	CH0/CH1 current excitation return	36	I4+	CH6/CH7 current excitation source
	CJC sensor			CJC sensor	
11	I2+	CH2/CH3 current excitation source	37	I3-	CH4/CH5 current excitation return
12	NC	Not connected	38	GND	Ground
13	C2H	CH2 sensor input (+)	39	C5L	CH5 sensor input (-)
14	C2L	CH2 sensor input (-)	40	C5H	CH5 sensor input (+)
15	4W23	CH2/CH3 4-wire, 2 sensor common	41	IC45	CH4/CH5 2 sensor common
16	IC23	CH2/CH3 2 sensor common	42	4W45	CH4/CH5 4-wire, 2 sensor common
17	C3H	CH3 sensor input (+)	43	C4L	CH4 sensor input (-)
18	C3L	CH3 sensor input (-)	44	C4H	CH4 sensor input (+)
19	GND	Ground	45	NC	Not connected
20	I2-	CH2/CH3 current excitation return	46	I3+	CH4/CH5 current excitation source
21	+5V	+5V output	47	+5V	+5V output
22	GND	Ground	48	GND	Ground
23	DIO0	Digital Input/Output	49	DIO7	Digital Input/Output
24	DIO1	Digital Input/Output	50	DIO6	Digital Input/Output
25	DIO2	Digital Input/Output	51	DIO5	Digital Input/Output
26	DIO3	Digital Input/Output	52	DIO4	Digital Input/Output

Use 16 AWG to 30 AWG wire for your signal connections.

Tighten screw terminal connections

When making connections to the screw terminals, be sure to tighten the screw until tight. Simply touching the top of the screw terminal is not sufficient to make a proper connection.

Sensor input terminals (C0H/C0L to C7H/C7L)

You can connect up to eight temperature sensors to the differential sensor inputs (C0H/C0L to C7H/C7L). Supported sensor categories include thermocouples, RTDs, thermistors, or semiconductor sensors.

Do not mix sensor categories within channel pairs. It is permitted to mix thermocouple types (J, K, R, S, T, N, E, and B) within channel pairs, however.

Do not connect two different sensor categories to the same channel pair

The USB-TEMP provides a 24 bit A/D converter for each channel pair. Each channel pair can monitor one sensor category. To monitor a sensor from a different category, connect the sensor to a different channel pair (input terminals).

Current excitation output terminals (±I1 to ±I4)

The USB-TEMP has four dedicated pairs of current excitation output terminals (±**I1** to ±**I4**). These terminals have a built-in precision current source to provide excitation for the resistive sensors used for RTD and thermistor measurements.

Each current excitation terminal is dedicated to one pair of sensor input channels:

- I1+ is the current excitation source for channel 0 and channel 1
- I2+ is the current excitation source for channel 2 and channel 2
- I3+ is the current excitation source for channel 4 and channel 5
- I4+ is the current excitation source for channel 6 and channel 7

Four-wire, two sensor common terminals (4W01 to 4W67)

These terminals are used as the common connection for four-wire configurations with two RTD or thermistor sensors.

Two sensor common terminals (IC01 to IC67)

These terminals are used as the common connection for two-wire configurations with two RTD or thermistor sensors.

Ground terminals (GND)

The six ground terminals (**GND**) provide a common ground for the input channels and DIO bits and are isolated (500 VDC) from the USB GND.

Power terminals (+5V)

The two **+5V** output terminals are isolated (500 VDC) from the USB +5V.

Digital terminals (DIO0 to DIO7)

You can connect up to eight digital I/O lines to the screw terminals labeled **DIO0** to **DIO7**. Each terminal is software configurable for input or output.

CJC sensors

The USB-TEMP has two built in high-resolution temperature sensors. One sensor is located on the right side of the package, and one sensor is located at the left side.

Thermocouple connections

A thermocouple consists of two dissimilar metals that are joined together at one end. When the junction of the metals is heated or cooled, a voltage is produced that correlates to temperature.

The USB-TEMP makes fully differential thermocouple measurements without the need of ground-referencing resistors. A 32-bit floating point value in either a voltage or temperature format is returned by software. An open thermocouple detection feature is available for each analog input which automatically detects an open or broken thermocouple.

Use *Insta*Cal to select the thermocouple type (J, K, R, S, N. E, and B) and one or more sensor input channels to connect the thermocouple.

Wiring configuration

Connect the thermocouple to the USB-TEMP using a differential configuration, as shown in Figure 3-2.

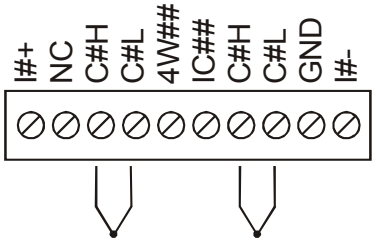

Figure 3-2. Typical thermocouple connection

The USB-TEMP **GND** pins are isolated from earth ground, so connecting thermocouple sensors to voltages referenced to earth ground is permissible as long as the isolation between the GND pins (9, 19, 28, 38) and earth ground is maintained.

When thermocouples are attached to conductive surfaces, the voltage differential between multiple thermocouples must remain within ±1.4 V. For best results, we recommend the use of insulated or ungrounded thermocouples when possible.

Maximum input voltage between analog input and ground

The absolute maximum input voltage between an analog input and the isolated GND pins is ±25 VDC when the USB-TEMP is powered on, and ±40 VDC when the USB-TEMP is powered off.

If you need to increase the length of your thermocouple, use the same type of thermocouple wires to minimize the error introduced by thermal EMFs.

RTD and thermistor connections

A resistance temperature detector (RTD) measures temperature by correlating the resistance of the RTD element with temperature. A thermistor is a thermally-sensitive resistor that is similar to an RTD in that its resistance changes with temperature — thermistors show a large change in resistance that is proportional to a small change in temperature. The main difference between RTD and thermistor measurements is the method used to linearize the sensor data.

RTDs and thermistors are resistive devices that require an excitation current to produce a voltage drop that can be measured differentially across the sensor. The USB-TEMP features four built-in current excitation sources (±I1 to ±I4) for measuring resistive type sensors. Each current excitation terminal is dedicated to one channel pair.

The USB-TEMP makes two, three, and four-wire measurements of RTD's (100 Ω platinum type) and thermistors.

Use *Insta*Cal to select the sensor type and the wiring configuration. Once the resistance value is calculated, the value is linearized in order to convert it to a temperature value. A 32-bit floating point value in either temperature or resistance is returned by software.

RTD maximum resistance

Resistance values greater than 660 Ω cannot be measured by the USB-TEMP in the RTD mode. The 660 Ω resistance limit includes the total resistance across the current excitation (±Ix) pins, which is the sum of the RTD resistance and the lead resistances.

Thermistor maximum resistance

Resistance values greater than 180k ohms cannot be measured by the USB-TEMP in the thermistor mode. The 180 k Ω resistance limit includes the total resistance across the current excitation (±Ix) pins, which is the sum of the thermistor resistance and the lead resistance.

Two-wire configuration

The easiest way to connect an RTD sensor or thermistor to the USB-TEMP is with a two-wire configuration, since it requires the fewest connections to the sensor. With this method, the two wires that provide the RTD sensor with its excitation current also measure the voltage across the sensor.

Since RTDs exhibit a low nominal resistance, measurement accuracy can be affected due to the lead wire resistance. For example, connecting lead wires that have a resistance of 1 Ω (0.5 Ω each lead) to a 100 Ω platinum RTD will result in a 1% measurement error.

With a two-wire configuration, you can connect either one sensor per channel pair, or two sensors per channel pair.

Two-wire, single-sensor

A two-wire single-sensor measurement configuration is shown in Figure 3-3.

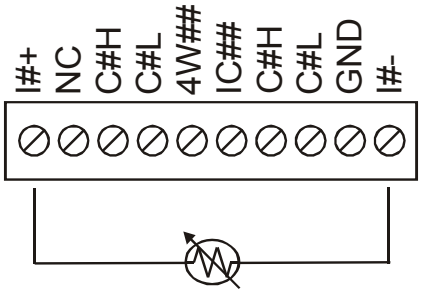

Figure 3-3. Two-wire, single RTD or thermistor sensor measurement configuration

When you select a two-wire single sensor configuration with *Insta*Cal, connections to C#H and C#L are made internally.

Two-wire, two sensor

A two-wire, two-sensor measurement configuration is shown in Figure 3-4.

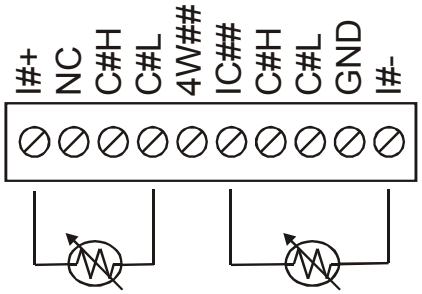

Figure 3-4. Two-wire, two RTD or thermistor sensors measurement configuration

When you select a two-wire, two sensor configuration with *Insta*Cal, connections to C#H (first sensor) and C#H/C#L (second sensor) are made internally.

When configured for two-wire mode, both sensors must be connected to obtain proper measurements.

Three-wire configuration

A three-wire configuration compensates for lead-wire resistance by using a single voltage sense connection. With a three-wire configuration, you can connect only one sensor per channel pair. A three-wire measurement configuration is shown in Figure 3-5.

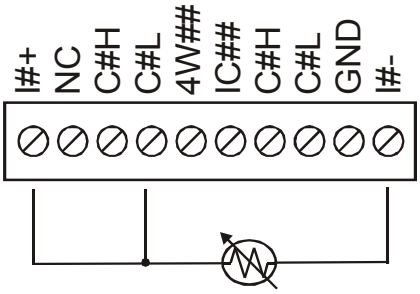

Figure 3-5. Three-wire RTD or thermistor sensor measurement configuration

When you select a three-wire sensor configuration with *Insta*Cal, the USB-TEMP measures the lead resistance on the first channel (C#H/C#L) and measures the sensor itself using the second channel (C#H/C#L). This configuration compensates for any lead-wire resistance and temperature change in lead-wire resistance. Connections to C#H for the first channel and C#H/C#L of the second channel are made internally.

Three-wire compensation

For accurate three wire compensation, the individual lead resistances connected to the ±I# pins must be of equal resistance value.

Four-wire configuration

With a four-wire configuration, connect two sets of sense/excitation wires at each end of the RTD or thermistor sensor. This configuration completely compensates for any lead-wire resistance and temperature change in lead-wire resistance.

Connect your sensor with a four-wire configuration when your application requires very high accuracy measurements. Examples of a four-wire single-sensor measurement configuration are shown in Figure 3-6 and Figure 3-7.

You can configure the USB-TEMP with either a single sensor per channel or two sensors per channel pair.

Four-wire, single-sensor

A four-wire, single-sensor connected to the first channel of a channel pair is shown in Figure 3-6.

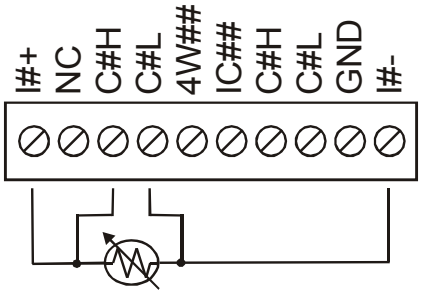

Figure 3-6. Four-wire, single RTD or thermistor sensor measurement configuration

A four-wire, single-sensor connected to the second channel of a channel pair is shown in Figure 3-7.

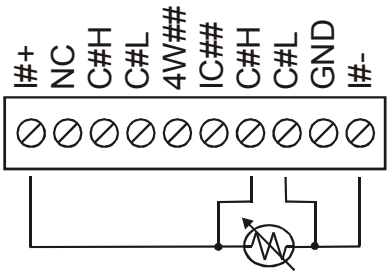

Figure 3-7. Four-wire, single RTD or thermistor sensor measurement configuration

A four-wire, two-sensor measurement configuration is shown in Figure 3-8.

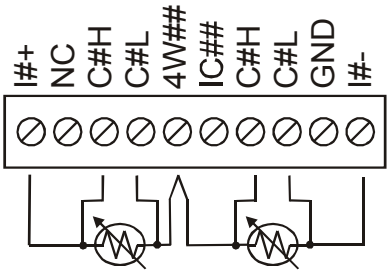

Figure 3-8. Four-wire, two RTD or thermistor sensors measurement configuration

When configured for four-wire, two sensor mode, both sensors must be connected to obtain proper measurements.

Semiconductor sensor measurements

Semiconductor sensors are suitable over a range of approximately -40 °C to 125 °C, where an accuracy of ±2 °C is adequate. The temperature measurement range of a semiconductor sensor is small when compared to thermocouples and RTDs. However, semiconductor sensors can be accurate, inexpensive and easy to interface with other electronics for display and control.

The USB-TEMP makes high-resolution measurements of semiconductor sensors, such as the LM36 or equivalent, and returns a 32-bit floating point value in either a voltage or temperature format.

Use *Insta*Cal to select the sensor type (TMP36 or equivalent) and the sensor input channel to connect the sensor.

Wiring configuration

You can connect a TMP36 (or equivalent) semiconductor sensor to the USB-TEMP using a single-ended configuration, as shown in Figure 3-9. The USB-TEMP also provides **+5V** and **GND** pins for powering the sensor.

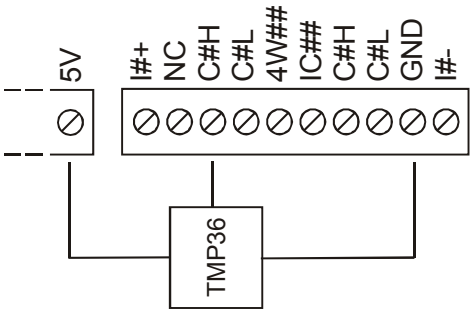

Figure 3-9. Semiconductor sensor measurement configuration

The software outputs the measurement data as a 32-bit floating point value in either voltage or temperature.

Digital I/O connections

You can connect up to eight digital I/O lines to the screw terminals labeled **DIO0** to **DIO7**. You can configure each digital bit for either input or output. All digital I/O lines are pulled up to +5V with a 47 K ohm resistor (default). You can request the factory to configure the resistor for pull-down to ground if desired.

When you configure the digital bits for input, you can use the USB-TEMP digital I/O terminals to detect the state of any TTL-level input. Refer to the schematic shown in Figure 3-10. If you set the switch to the +5V input, DIO0 reads *TRUE* (1). If you move the switch to GND, DIO0 reads *FALSE* (0).

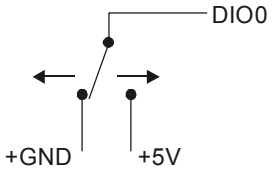

Figure 3-10. Schematic showing switch detection by digital channel DIO0

Caution! All ground pins on the USB-TEMP (pins 9, 19, 28, 38) are common and are isolated from earth ground. If a connection is made to earth ground when using digital I/O and conductive thermocouples, the thermocouples are no longer isolated. In this case, thermocouples must not be connected to any conductive surfaces that may be referenced to earth ground.

For general information regarding digital signal connections and digital I/O techniques, refer to the *Guide to Signal Connections* (available on our web site at www.mccdaq.com/signals/signals.pdf).

Functional Details

Thermocouple measurements

A thermocouple consists of two dissimilar metals that are joined together at one end. When the junction of the metals is heated or cooled, a voltage is produced that correlates to temperature.

The USB-TEMP hardware level-shifts the thermocouple's output voltage into the A/D's common mode input range by applying +2.5 V to the thermocouple's low side at the C#L input. Always connect thermocouple sensors to the USB-TEMP in a floating fashion. Do not attempt to connect the thermocouple low side C#L to GND or to a ground referencing resistor.

Cold junction compensation (CJC)

When you connect the thermocouple sensor leads to the sensor input channel, the dissimilar metals at the USB-TEMP terminal blocks produce an additional thermocouple junction. This junction creates a small voltage error term which must be removed from the overall sensor measurement using a cold junction compensation technique. The measured voltage includes both the thermocouple voltage and the cold junction voltage. To compensate for the additional cold junction voltage, the USB-TEMP subtracts the *cold junction* voltage from the thermocouple voltage.

The USB-TEMP has two high-resolution temperature sensors that are integrated into the design of the USB-TEMP. One sensor is located on the right side of the package, and one sensor is located at the left side. The CJC sensors measure the average temperature at the terminal blocks so that the cold junction voltage can be calculated. A software algorithm automatically corrects for the additional thermocouples created at the terminal blocks by subtracting the calculated cold junction voltage from the analog input's thermocouple voltage measurement.

Increasing the thermocouple length

If you need to increase the length of your thermocouple, use the same type of thermocouple wires to minimize the error introduced by thermal EMFs.

Data linearization

After the CJC correction is performed on the measurement data, an on-board microcontroller automatically linearizes the thermocouple measurement data using National Institute of Standards and Technology (NIST) linearization coefficients for the selected thermocouple type.

The measurement data is then output as a 32-bit floating point value in the configured format (voltage or temperature).

Open-thermocouple detection (OTD)

The USB-TEMP is equipped with an open-thermocouple detection for each analog input channel. With OTD, any open-circuit or short-circuit condition at the thermocouple sensor is detected by the software. An open channel is detected by driving the input voltage to a negative value outside the range of any thermocouple output. The software recognizes this as an invalid reading and flags the appropriate channel. The software continues to sample all channels when OTD is detected.

Input leakage current

With open-thermocouple detection enabled, 105 nA (max.) of input leakage current is injected into the thermocouple. This current can cause an error voltage to develop across the lead resistance of the thermocouple that is indistinguishable from the thermocouple voltage you are measuring. You can estimate this error voltage with the following formula:

error voltage = resistance of the thermocouple x 105 nA

To reduce the error, reduce the length of the thermocouple to lower its resistance, or lower the AWG of the wire by using a wire with a larger diameter. With open-thermocouple detection disabled, 30 nA (max) of input leakage current is injected into the thermocouple.

RTD and thermistor measurements

RTDs and thermistors are resistive devices that require an excitation current to produce a voltage drop that can be measured differentially across the sensor. The USB-TEMP measures the sensor resistance by forcing a known excitation current through the sensor and then measuring (differentially) the voltage across the sensor to determine its resistance.

After the voltage measurement is made, the resistance of the RTD is calculated using Ohms law – the sensor resistance is calculated by dividing the measured voltage by the current excitation level (±**Ix**) source. The value of the ±**Ix** source is stored in local memory.

Once the resistance value is calculated, the value is linearized in order to convert it to a temperature value. The measurement is returned by software as a 32-bit floating point value in a voltage, resistance or temperature format.

Data linearization

An on-board microcontroller automatically performs linearization on RTD and thermistor measurements.

- RTD measurements are linearized using a Callendar-Van Dusen coefficients algorithm (you select DIN, SAMA, or ITS-90).
- Thermistor measurements are linearized using a Steinhart-Hart linearization algorithm (you supply the coefficients from the sensor manufacturer's data sheet).

USB connector

The USB connector provides +5V power and communication. No external power supply is required.

LED

The LED indicates the communication status of the USB-TEMP. It uses up to 5 mA of current. Table 4-2 defines the function of the USB-TEMP LED.

Table 4-2. LED Illumination

LED Illumination	Indication
Steady green	The USB-TEMP is connected to a computer or external USB hub.
Pulsing green	Data is being transferred. Upon connection, the LED should flash three times and then remain lit (indicates a successful installation).

Power

The two **+5V** terminals are isolated (500VDC) from the USB +5V.

Caution! Each +5V terminal is an output. Do not connect to an external power supply or you may damage the USB-TEMP and possibly the computer.

Specifications

Typical for 25 °C unless otherwise specified.
Specifications in *italic* text are guaranteed by design.

Analog input

Table 1. Generic analog input specifications

Parameter	Conditions	Specification
A/D converters		Four dual 24-bit, Sigma-Delta type
Number of channels		8 differential
Input isolation		*500 VDC minimum between field wiring and USB interface*
Channel configuration		Software programmable to match sensor type
Differential input voltage range for the various sensor categories	Thermocouple	±0.080 V
	RTD	0 to 0.5 V
	Thermistor	0 to 2 V
	Semiconductor sensor	0 to 2.5 V
Absolute maximum input voltage	*±C0x through ±C7x relative to GND (pins 9, 19, 28, 38)*	±25 V power on, ±40 V power off.
Input impedance		5 Gigohm, min.
Input leakage current	Open thermocouple detect disabled	30 nA max.
	Open thermocouple detect enabled	105 nA max.
Normal mode rejection ratio	*f_{IN} = 60 Hz*	*90 dB min.*
Common mode rejection ratio	*f_{IN} = 50 Hz/60 Hz*	*100 dB min.*
Resolution		24 bits
No missing codes		*24 bits*
Input coupling		DC
Warm-up time		30 minutes min.
Open thermocouple detect		Automatically enabled when the channel pair is configured for thermocouple sensor. The maximum open detection time is 3 seconds.
CJC sensor accuracy	*15 °C to 35 °C*	*±0.25 °C typ.,±0.5 °C max.*
	0 °C to 70 °C	*–1.0 to +0.5 °C max*

Channel configurations

Table 2. Channel configuration specifications

Sensor Category	Conditions	Specification
Disabled		
Thermocouple		8 differential channels
Semiconductor sensor		8 differential channels
RTD and thermistor	2-wire input configuration with a single sensor	4 differential channels
	2-wire input configuration with two sensors	8 differential channels
	3-wire configuration with a single sensor per channel pair	4 differential channels
	4-wire input configuration	8 differential channels

Note 1: Internally, the USB-TEMP has four, dual-channel, fully differential A/Ds providing a total of eight differential channels. The analog input channels are therefore configured in four channel pairs with CH0/CH1 sensor inputs, CH2/CH3 sensor inputs, CH4/CH5 sensor inputs, and CH6/CH7 sensor inputs paired together. This "channel-pairing" requires the analog input channel pairs be configured to monitor the same category of temperature sensor. Mixing different sensor types of the same category (such as a type J thermocouple on channel 0 and a type T thermocouple on channel 1) is valid.

Note 2: Channel configuration information is stored in the EEPROM of the isolated microcontroller by the firmware whenever any item is modified. Modification is performed by commands issued over USB from an external application, and the configuration is made non-volatile through the use of the EEPROM.

Note 3: The factory default configuration is *Disabled*. The Disabled mode will disconnect the analog inputs from the terminal blocks and internally ground all of the A/D inputs. This mode also disables each of the current excitation sources.

Compatible sensors

Table 3. Compatible sensor type specifications

Parameter	Conditions
Thermocouple	J: -210 °C to 1200 °C
	K: -270 °C to 1372 °C
	R: -50 °C to 1768 °C
	S: -50 °C to 1768 °C
	T: -270 °C to 400 °C
	N: -270 °C to 1300 °C
	E: -270 °C to 1000 °C
	B: 0 °C to 1820 °C
RTD	100 ohm PT (DIN 43760: 0.00385 ohms/ohm/°C)
	100 ohm PT (SAMA: 0.003911 ohms/ohm/°C)
	100 ohm PT (ITS-90/IEC751:0.0038505 ohms/ohm/°C)
Thermistor	Standard 2,252 ohm through 30,000 ohm
Semiconductor / IC	TMP36 or equivalent

Accuracy

Thermocouple measurement accuracy

Table 4. Thermocouple accuracy specifications, including CJC measurement error

Sensor Type	Maximum error	Typical error	Temperature range
J	±1.499 °C	±0.507 °C	-210 to 0 °C
	±0.643 °C	±0.312 °C	0 to 1200 °C
K	±1.761 °C	±0.538 °C	-210 to 0 °C
	±0.691 °C	±0.345 °C	0 to 1372 °C
S	±2.491°C	±0.648 °C	-50 to 250 °C
	±1.841 °C	±0.399 °C	250 to 1768.1 °C
R	±2.653 °C	±0.650 °C	-50 to 250 °C
	±1.070 °C	±0.358 °C	250 to 1768.1 °C
B	±1.779 °C	±0.581 °C	250 to 700 °C
	±0.912 °C	±0.369 °C	700 to 1820 °C
E	±1.471 °C	±0.462 °C	-200 to 0 °C
	±0.639 °C	±0.245 °C	0 to 1000 °C
T	±1.717 °C	±0.514 °C	-200 to 0 °C
	±0.713 °C	±0.256 °C	0 to 600 °C
N	±1.969 °C	±0.502 °C	-200 to 0 °C
	±0.769 °C	±0.272 °C	0 to 1300 °C

Note 4: Thermocouple measurement accuracy specifications include linearization, cold-junction compensation and system noise. These specs are for one year, or 3000 operating hours, whichever comes first, and for operation of the USB-TEMP between 15 °C and 35 °C. For measurements outside this range, add ±0.5 degree to the maximum error shown. There are CJC sensors on each side of the module. The accuracy listed above assumes the screw terminals are at the same temperature as the CJC sensor. Errors shown do not include inherent thermocouple error. Please contact your thermocouple supplier for details on the actual thermocouple error.

Note 5: Thermocouples must be connected to the USB-TEMP such that they are floating with respect to GND (pins 9, 19, 28, 38). The USB-TEMP GND pins are isolated from earth ground, so connecting thermocouple sensors to voltages referenced to earth ground is permissible as long as the isolation between the GND pins and earth ground is maintained.

Note 6: When thermocouples are attached to conductive surfaces, the voltage differential between multiple thermocouples must remain within ±1.4 V. For best results we recommend the use of insulated or ungrounded thermocouples when possible.

Semiconductor sensor measurement accuracy

Table 5. Semiconductor sensor accuracy specifications

Sensor Type	Temperature Range (°C)	Maximum Accuracy Error
TMP36 or equivalent	-40 to 150 °C	±0.50 °C

Note 7: Error shown does not include errors of the sensor itself. These specs are for one year while operation of the USB-TEMP unit is between 15 °C and 35 °C. Please contact your sensor supplier for details on the actual sensor error limitations.

RTD measurement accuracy

Table 6. RTD measurement accuracy specifications

RTD	Sensor Temperature	Maximum Accuracy Error (°C) I_{x+} = 210 µA	Typical Accuracy Error (°C) I_{x+} = 210 µA
PT100, DIN, US or ITS-90	-200 °C	±0.15	±0.08
	-0 °C	±0.18	±0.11
	100 °C	±0.26	±0.15
	300 °C	±0.37	±0.23
	600 °C	±0.43	±0.27

Note 8: Error shown does not include errors of the sensor itself. The sensor linearization is performed using a Callendar-Van Dusen linearization algorithm. These specs are for one year while operation of the USB-TEMP unit is between 15 °C and 35 °C. The specification does not include lead resistance errors for 2-wire RTD connections. Please contact your sensor supplier for details on the actual sensor error limitations.

Note 9: Resistance values greater than 660 ohms cannot be measured by the USB-TEMP in the RTD mode. The 660 ohm resistance limit includes the total resistance across the current excitation (±Ix) pins, which is the sum of the RTD resistance and the lead resistances.

Note 10: For accurate three wire compensation, the individual lead resistances connected to the ±Ix pins must be of equal value.

Thermistor measurement accuracy

Table 7. Thermistor measurement accuracy specifications

Thermistor	Temperature Range	Maximum Accuracy Error (°C) I_{x+} = 10 µA
2252 Ω	-40 to120 °C	±0.05
3000 Ω	-40 to120 °C	±0.05
5000 Ω	-35 to120 °C	±0.05
10000 Ω	-25 to120 °C	±0.05
30000 Ω	-10 to120 °C	±0.05

Note 11: Error shown does not include errors of the sensor itself. The sensor linearization is performed using a Steinhart-Hart linearization algorithm. These specs are for one year while operation of the USB-TEMP unit is between 15 °C and 35 °C. The specification does not include lead resistance errors for 2-wire thermistor connections. Please contact your sensor supplier for details on the actual sensor error limitations. Total thermistor resistance on any given channel pair must not exceed 180 k ohms. Typical resistance values at various temperatures for supported thermistors are shown in Table 8.

Table 8. Typical thermistor resistance specifications

Temp	2252 Ω thermistor	3000 Ω thermistor	5 kΩ thermistor	10 kΩ thermistor	30 kΩ thermistor
-40 °C	76 kΩ	101 kΩ	168 kΩ	240 kΩ (Note 12)	885 kΩ (Note 12)
-35 °C	55 kΩ	73 kΩ	121 kΩ	179 kΩ	649 kΩ (Note 12)
-30 °C	40 kΩ	53 kΩ	88 kΩ	135 kΩ	481 kΩ (Note 12)
-25 °C	29 kΩ	39 kΩ	65 kΩ	103 kΩ	360 kΩ (Note 12)
-20 °C	22 kΩ	29 kΩ	49 kΩ	79 kΩ	271 kΩ (Note 12)
-15 °C	16 kΩ	22 kΩ	36 kΩ	61 kΩ	206 kΩ (Note 12)
-10 °C	12 kΩ	17 kΩ	28 kΩ	48 kΩ	158 kΩ
-5 °C	9.5 kΩ	13 kΩ	21 kΩ	37 kΩ	122 kΩ
0 °C	7.4 kΩ	9.8 kΩ	16 kΩ	29 kΩ	95 kΩ

Note 12: Resistance values greater than 180 k ohms cannot be measured by the USB-TEMP in the thermistor mode. The 180 k ohm resistance limit includes the total resistance across the current excitation (±Ix) pins, which is the sum of the thermistor resistance and the lead resistances.

Note 13: For accurate three wire compensation, the individual lead resistances connected to the ±Ix pins must be of equal value.

Throughput rate

Table 9. Throughput rate specifications

Number of Input Channels	Maximum Throughput
1	2 Samples/second
2	2 S/s on each channel, 4 S/s total
3	2 S/s on each channel, 6 S/s total
4	2 S/s on each channel, 8 S/s total
5	2 S/s on each channel, 10 S/s total
6	2 S/s on each channel, 12 S/s total
7	2 S/s on each channel, 14 S/s total
8	2 S/s on each channel, 16 S/s total

Note 14: The analog inputs are configured to run continuously. Each channel is sampled twice per second. The maximum latency between when a sample is acquired and the temperature data is provided by the USB unit is approximately 0.5 seconds.

Digital input/output

Table 10. Digital input/output specifications

Digital type	CMOS
Number of I/O	8 (DIO0 through DIO7)
Configuration	Independently configured for input or output. Power on reset is input mode.
Pull-up/pull-down configuration	All pins pulled up to +5 V via 47 K resistors (default). Pull-down to ground (GND) also available.
Digital I/O transfer rate (software paced)	▪ Digital input – 50 port reads or single bit reads per second typ. ▪ Digital output – 100 port writes or single bit writes per second typ.
Input high voltage	2.0 V min., 5.5 V absolute max.
Input low voltage	0.8 V max., –0.5 V absolute min.
Output low voltage (IOL = 2.5 mA)	0.7 V max.
Output high voltage (IOH = –2.5 mA)	3.8 V min.

Note 15: All ground pins on the USB-TEMP (pins 9, 19, 28, 38) are common and are isolated from earth ground. If a connection is made to earth ground when using digital I/O and conductive thermocouples, the thermocouples are no longer isolated. In this case, thermocouples must not be connected to any conductive surfaces that may be referenced to earth ground.

Memory

Table 11. Memory specifications

EEPROM	1,024 bytes isolated micro reserved for sensor configuration 256 bytes USB micro for external application use

Microcontroller

Table 12. Microcontroller specifications

Type	Two high-performance 8-bit RISC microcontrollers

USB +5V voltage

Table 13. USB +5V voltage specifications

Parameter	Conditions	Specification
USB +5V (VBUS) input voltage range		4.75 V min. to 5.25 V max.

Power

Table 14. Power specifications

Parameter	Conditions	Specification
Supply current	USB enumeration	<100 mA
Supply current (Note 16)	Continuous mode	70 mA max.
User +5V output voltage range (terminal block pin 21 and pin 47)	Connected to self-powered hub. (Note 17)	4.75 V min. to 5.25 V max.
User +5V output current (terminal block pin 21 and pin 47)	Bus-powered and connected to a self-powered hub. (Note 17)	10 mA max.
Isolation	Measurement system to PC	500 VDC min.

Note 16: This is the total current requirement for the USB-TEMP which includes up to 10 mA for the status LED.

Note 17: Self-Powered Hub refers to a USB hub with an external power supply. Self-powered hubs allow a connected USB device to draw up to 500 mA.

Root Port Hubs reside in the PC's USB Host Controller. The USB port(s) on your PC are root port hubs. All externally powered root port hubs (desktop PC's) provide up to 500 mA of current for a USB device. Battery-powered root port hubs provide 100 mA or 500 mA, depending upon the manufacturer. A laptop PC that is not connected to an external power adapter is an example of a battery-powered root port hub.

USB specifications

Table 15. USB specifications

USB device type	USB 2.0 (full-speed)
Device compatibility	USB 1.1, USB 2.0
	Self-powered, 100 mA consumption max
USB cable type	*A-B cable, UL type AWM 2527 or equivalent. (min 24 AWG VBUS/GND, min 28 AWG D+/D–)*
USB cable length	3 meters max.

Current excitation outputs (Ix+)

Table 16. Current excitation output specifications

Parameter	Conditions	Specification
Configuration		4 dedicated pairs: ±I1 - CH0/CH1 ±I2 - CH2/CH3 ±I3 - CH4/CH5 ±I4 - CH6/CH7
Current excitation output ranges	Thermistor	10 µA typ.
	RTD	210 µA typ.
Tolerance		±5% typ.
Drift		200 ppm/°C
Line regulation		*2.1 ppm/V max.*
Load regulation		*0.3 ppm/V typ.*
Output compliance voltage (relative to GND pins 9, 19, 28, 38)		3.90 V max. -0.03 V min.

Note 18: The USB-TEMP has four current excitation outputs, with ±I1 dedicated to the CH0/CH1 analog inputs, ±I2 dedicated to CH2/CH3, ±I3 dedicated to CH4/CH5, and ±I4 dedicated to CH6/CH7. The excitation output currents should always be used in this dedicated configuration.

Note 19: The current excitation outputs are automatically configured based on the sensor (thermistor or RTD) selected.

Environmental

Table 17. Environmental specifications

Operating temperature range	0 to 70 ° C
Storage temperature range	-40 to 85 ° C
Humidity	0 to 90% non-condensing

Mechanical

Table 18. Mechanical specifications

Dimensions	127 mm (L) x 88.9 mm (W) x 35.56 (H)
User connection length	3 meters max.

Screw terminal connector type and pin out

Table 19. Screw terminal connector specifications

Connector type	Screw terminal
Wire gauge range	16 AWG to 30 AWG

Screw terminal pin out

Table 20. Screw terminal pin out

Pin	Signal Name	Pin Description	Pin	Signal Name	Pin Description
1	I1+	CH0/CH1 current excitation source	27	I4-	CH6/CH7 current excitation return
2	NC		28	GND	
3	C0H	CH0 sensor input (+)	29	C7L	CH7 sensor input (-)
4	C0L	CH0 sensor input (-)	30	C7H	CH7 sensor input (+)
5	4W01	CH0/CH1 4-wire, 2 sensor common	31	IC67	CH6/CH7 2 sensor common
6	IC01	CH0/CH1 2-sensor common	32	4W67	CH6/CH7 4-wire, 2 sensor common
7	C1H	CH1 sensor input (+)	33	C6L	CH6 sensor input (-)
8	C1L	CH1 sensor input (-)	34	C6H	CH6 sensor input (+)
9	GND		35	NC	
10	I1-	CH0/CH1 current excitation return	36	I4+	CH6/CH7 current excitation source
	CJC sensor			CJC sensor	
11	I2+	CH2/CH3 current excitation source	37	I3-	CH4/CH5 current excitation return
12	NC		38	GND	
13	C2H	CH2 sensor input (+)	39	C5L	CH5 sensor input (-)
14	C2L	CH2 sensor input (-)	40	C5H	CH5 sensor input (+)
15	4W23	CH2/CH3 4-wire, 2 sensor common	41	IC45	CH4/CH5 2 sensor common
16	IC23	CH2/CH3 2 sensor common	42	4W45	CH4/CH5 4-wire, 2 sensor common
17	C3H	CH3 sensor input (+)	43	C4L	CH4 sensor input (-)
18	C3L	CH3 sensor input (-)	44	C4H	CH4 sensor input (+)
19	GND		45	NC	
20	I2-	CH2/CH3 current excitation return	46	I3+	CH4/CH5 current excitation source
21	+5V	+5V output	47	+5V	+5V output
22	GND		48	GND	
23	DIO0	Digital Input/Output	49	DIO7	Digital Input/Output
24	DIO1	Digital Input/Output	50	DIO6	Digital Input/Output
25	DIO2	Digital Input/Output	51	DIO5	Digital Input/Output
26	DIO3	Digital Input/Output	52	DIO4	Digital Input/Output

Declaration of Conformity

Manufacturer: Measurement Computing Corporation
Address: 10 Commerce Way
Suite 1008
Norton, MA 02766
USA

Category: Electrical equipment for measurement, control and laboratory use.

Measurement Computing Corporation declares under sole responsibility that the product

USB-TEMP

to which this declaration relates is in conformity with the relevant provisions of the following standards or other documents:

EU EMC Directive 89/336/EEC: Electromagnetic Compatibility, EN 61326 (1997) Amendment 1 (1998)

Emissions: Group 1, Class B

- EN 55011 (1990)/CISPR 11: Radiated and Conducted emissions.

Immunity: EN61326, Annex A

- IEC 1000-4-2 (1995): Electrostatic Discharge immunity, Criteria A.
- IEC 1000-4-3 (1995): Radiated Electromagnetic Field immunity Criteria A.
- IEC 1000-4-8 (1994): Power Frequency Magnetic Field immunity Criteria A.

Power line and I/O tests to IEC 1000-4-4, IEC 1000-4-5, IEC 1000-4-6, and IEC 1000-4-11 were not required. The device is DC powered from an I/O cable which is less than three meters long.

Declaration of Conformity based on tests conducted by Chomerics Test Services, Woburn, MA 01801, USA in April, 2005. Test records are outlined in Chomerics Test Report #EMI4193.05.

We hereby declare that the equipment specified conforms to the above Directives and Standards.

Carl Haapaoja, Director of Quality Assurance

Measurement Computing Corporation
10 Commerce Way
Suite 1008
Norton, Massachusetts 02766
(508) 946-5100
Fax: (508) 946-9500
E-mail: info@mccdaq.com
www.mccdaq.com