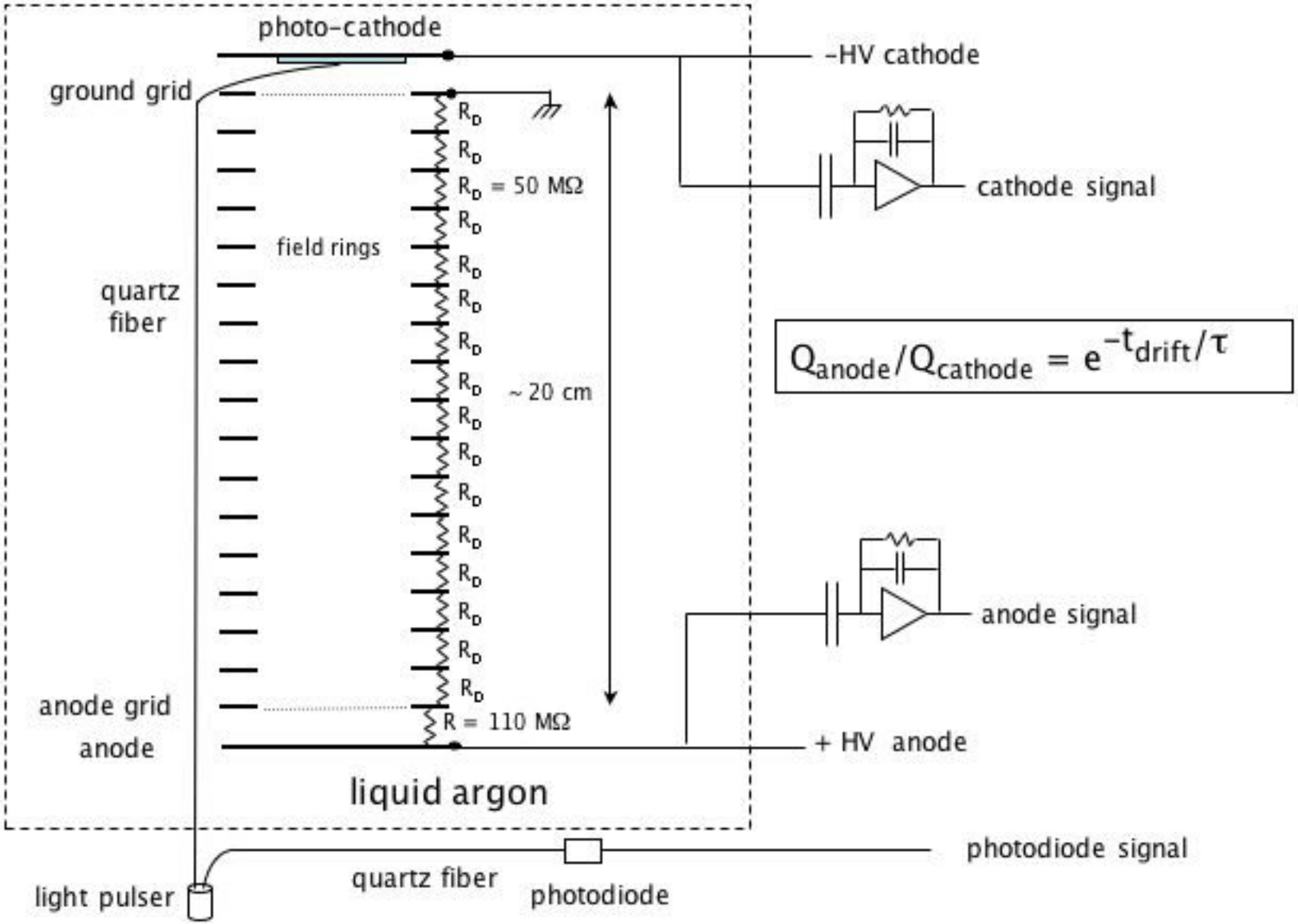Schematic of Liquid Argon Purity Monitor (PrM)