Schematic of Liquid Argon Purity Monitor (PrM)

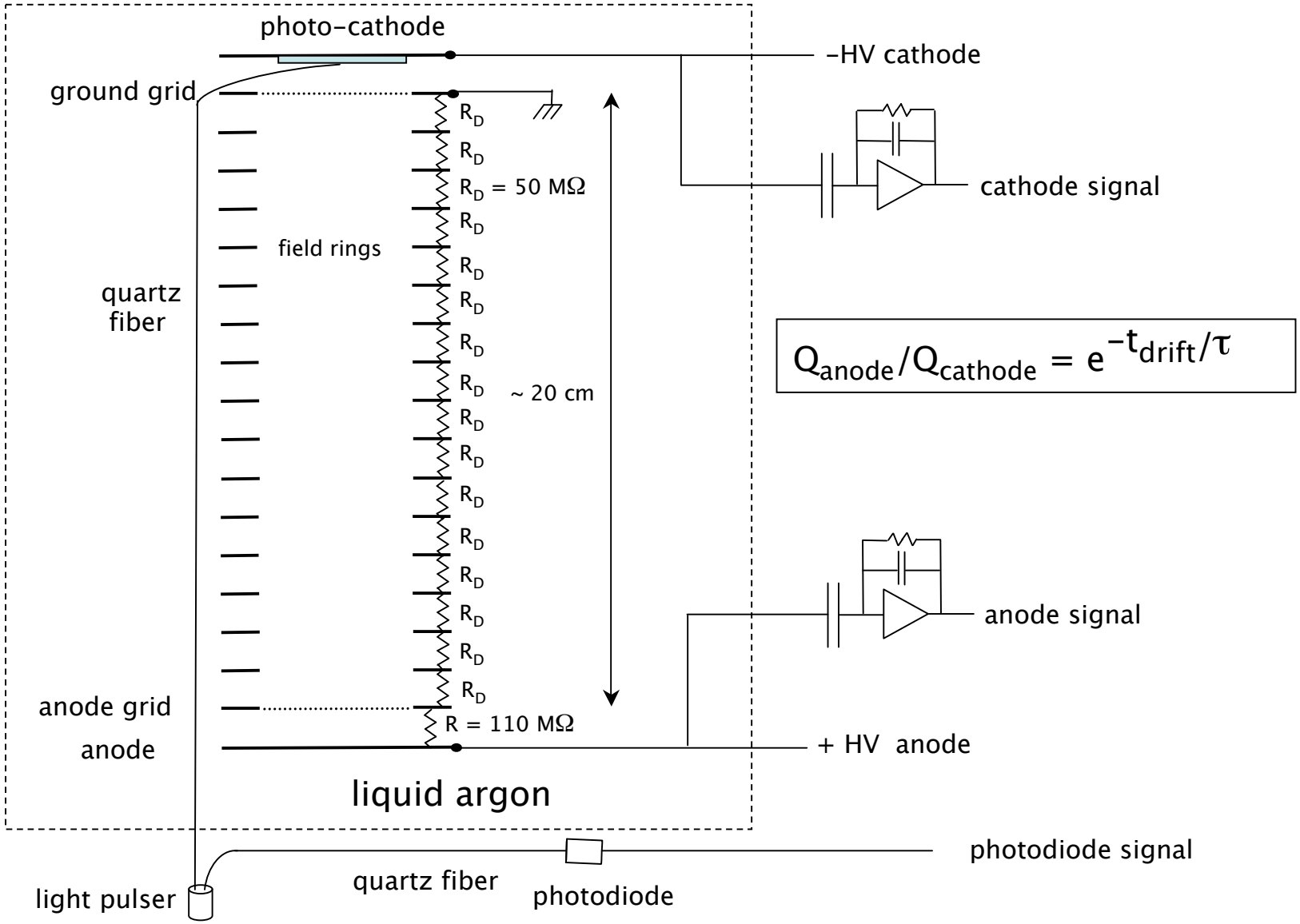

$$Q_{anode}/Q_{cathode} = e^{-t_{drift}/\tau}$$

ICARUS PURITY MONITOR

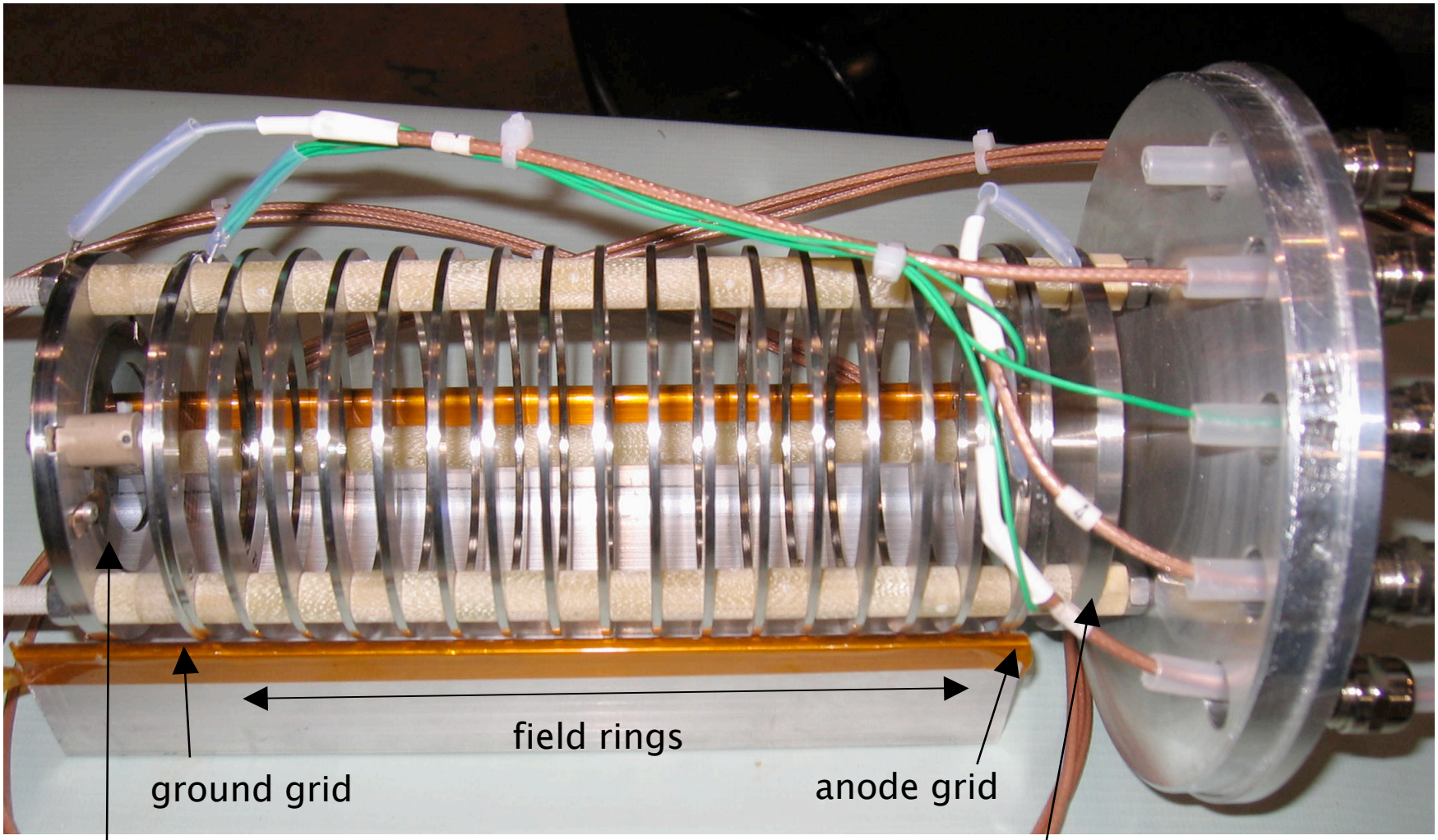

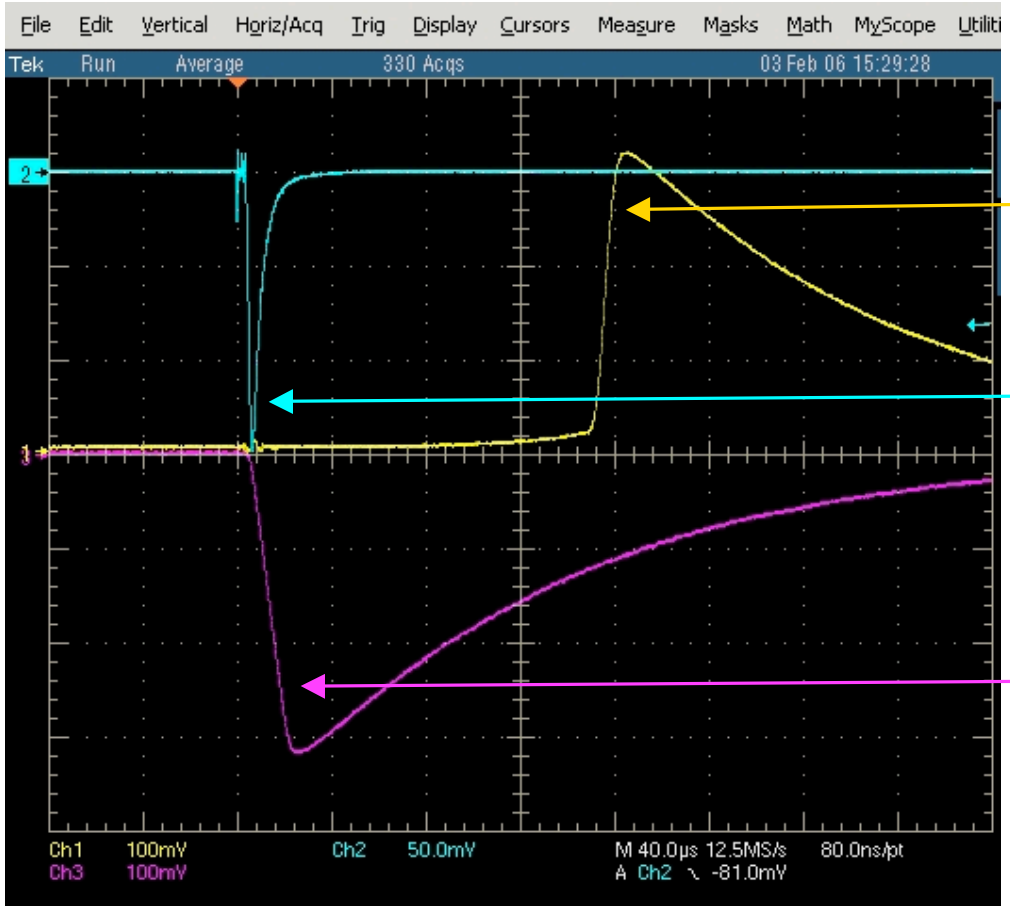

anode signal

photodiode

cathode signal

t_{drift} = 150 µs, $Q_{anode}/Q_{cathode}$ = ~1

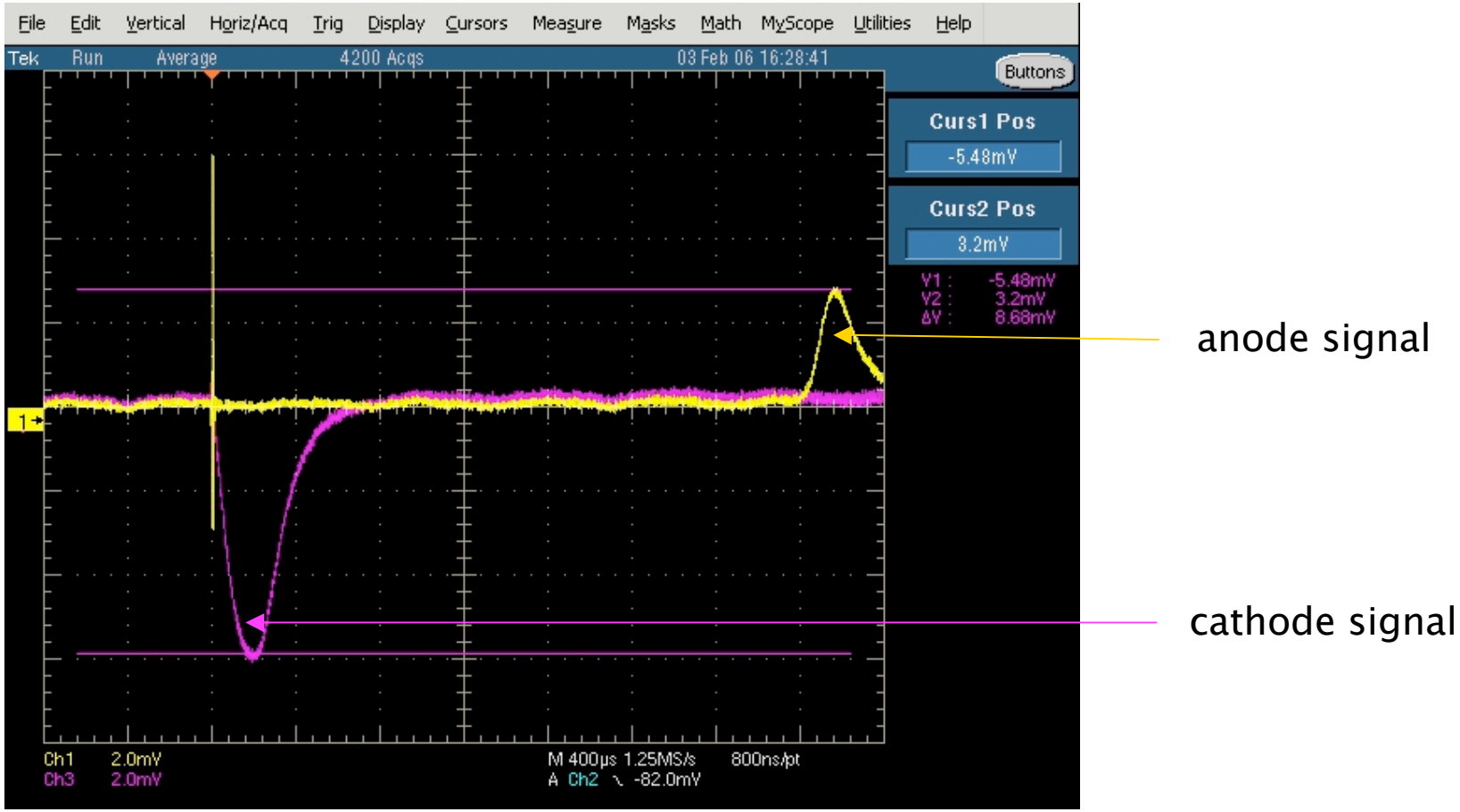

a 2.8 millisecond drift, $Q_{anode}/Q_{cathode} \sim 0.4$ (*)

(*) peaks need some correction for cathode signal rise-time

Credits: F. Cavanna, F. Arneodo et al. at LNGS for loan of PrM

E. Hahn for production of photocathodes (TCD)

W. Jaskierny for HV and readout electronics (SSD)

C. Kendziora and PAB group for assembly of cryogenic system (MSD)

J. Krider for understanding and development of PrM (TCD)

T. Tope for design of cryogenic system (MSD)