# Schematic of Liquid Argon Purity Monitor (PrM)

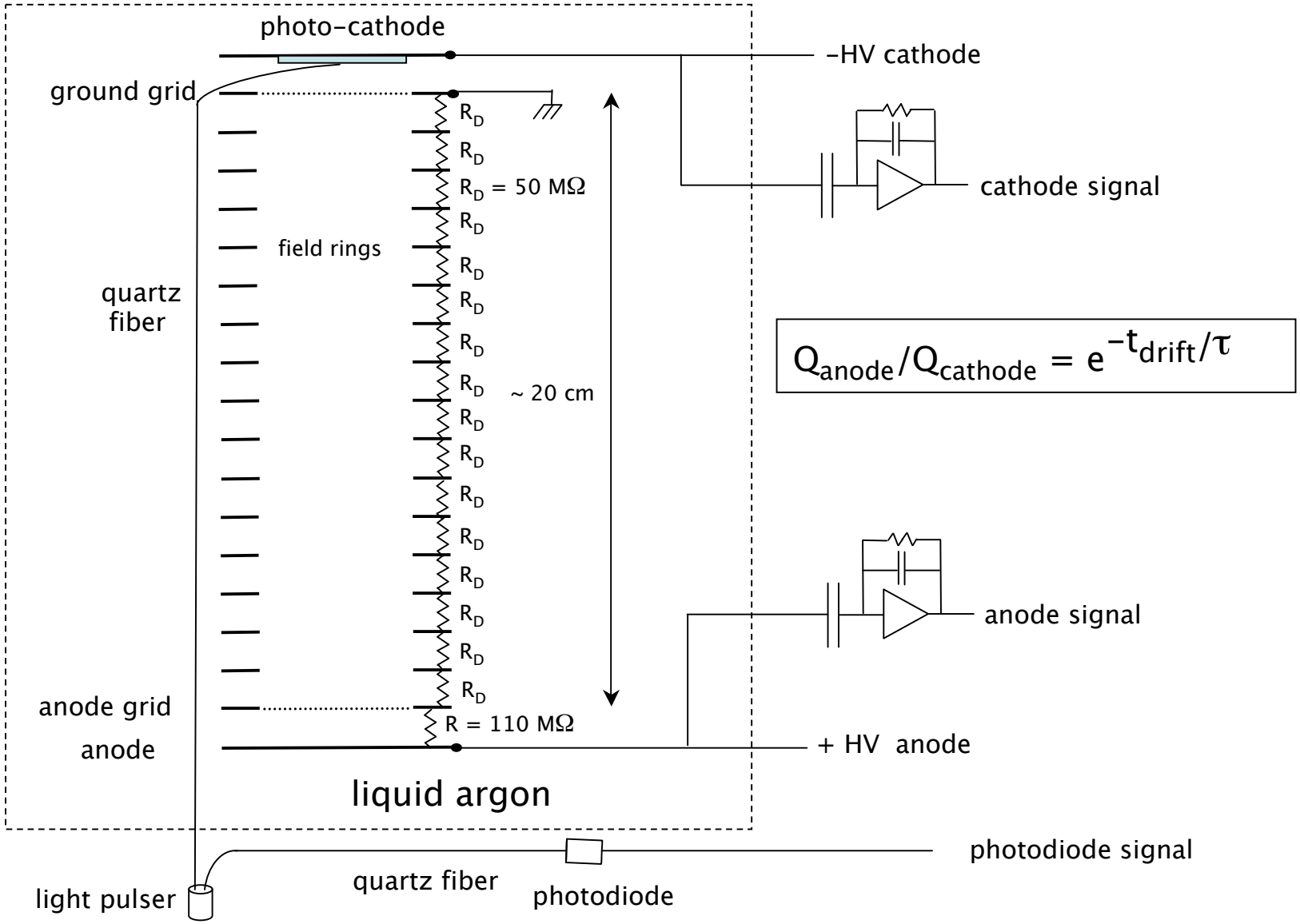


$$Q_{anode}/Q_{cathode} = e^{-t_{drift}/\tau}$$

# ICARUS PURITY MONITOR

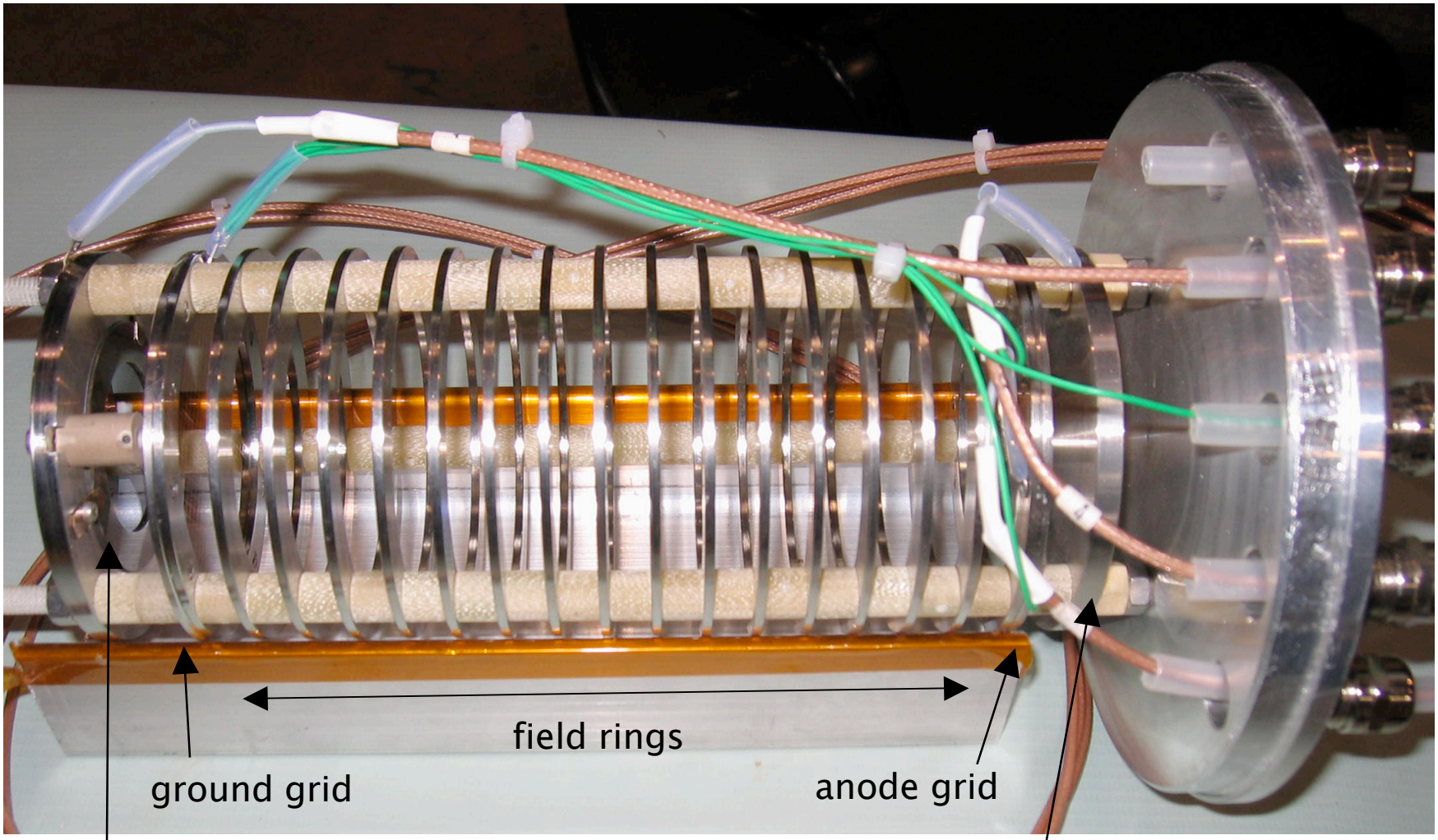

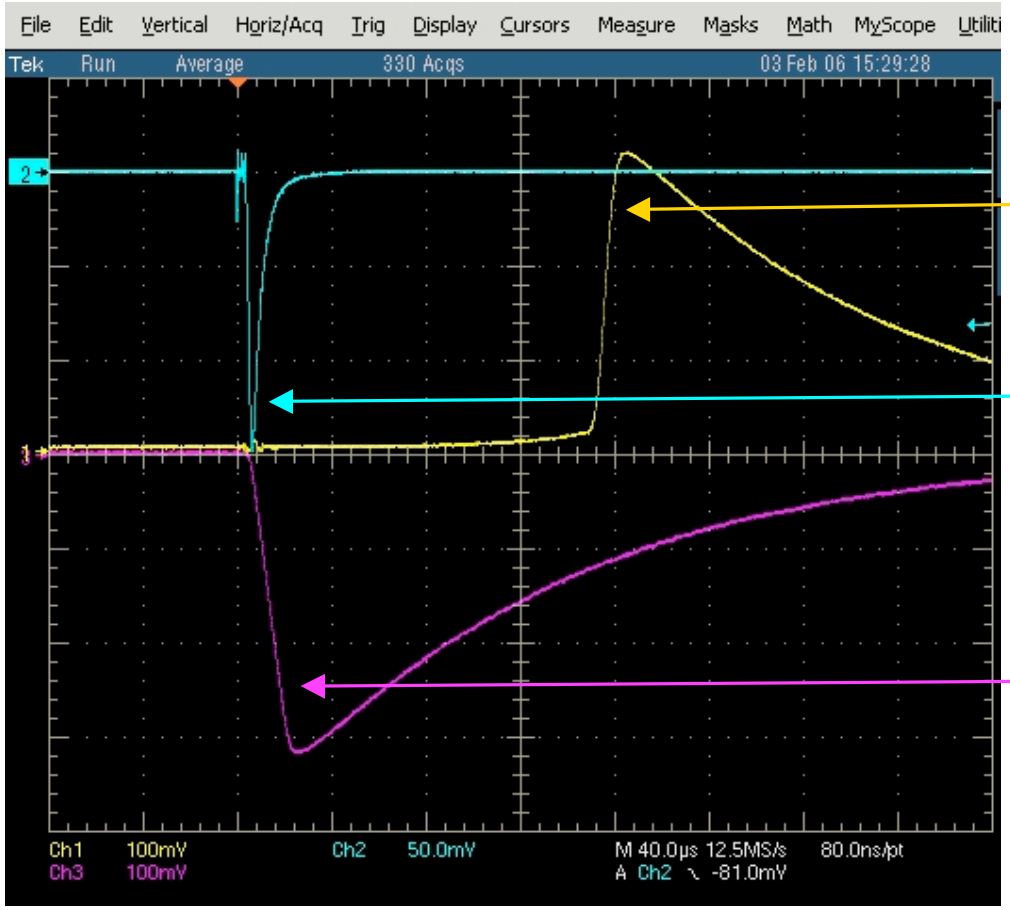


anode signal

photodiode

cathode signal

$t_{drift}$ = 150 µs, $Q_{anode}/Q_{cathode}$ = ~1

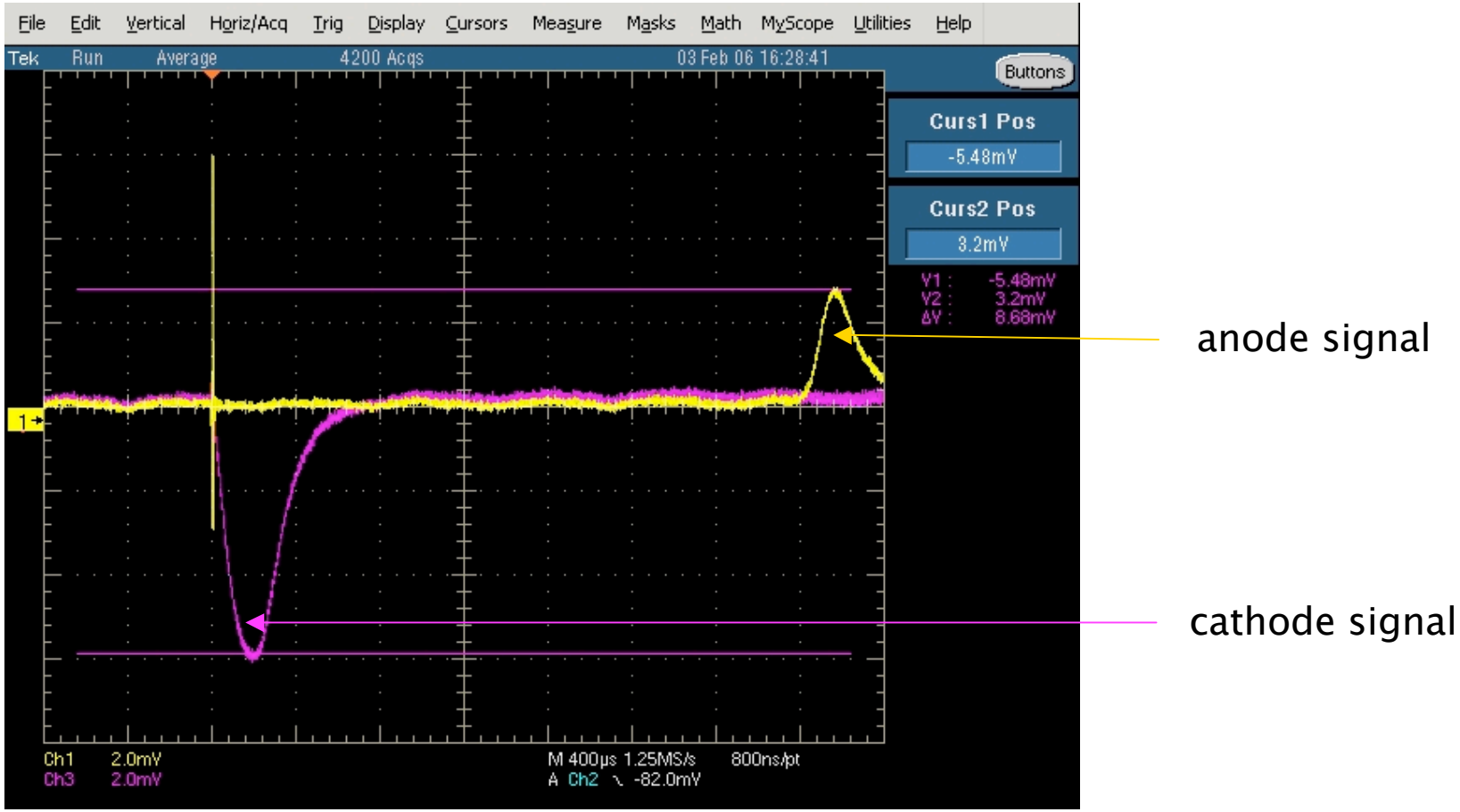


a 2.8 millisecond drift, $Q_{anode}/Q_{cathode} \sim 0.4$ (*)

(*) peaks need some correction for cathode signal rise-time

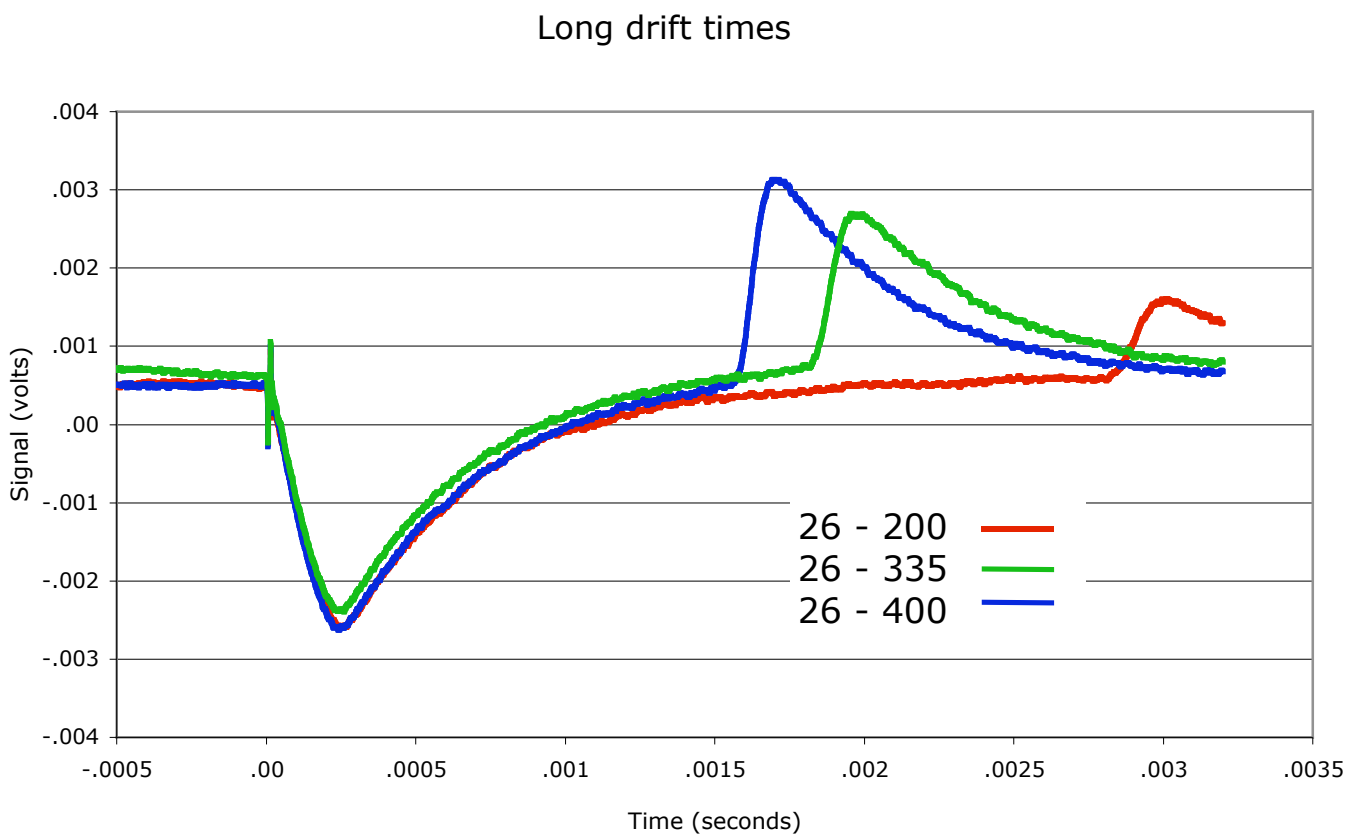


This plot shows signals at 1.5 ms, 1.8 ms and 2.8 ms drift-times taken with an amplifier/integrator with longer decay time. To achieve such long drift-times, the drift-field is lower than required for optimal transmission across the cathode-grid and this needs to be accounted for in calculating effective lifetimes. The efficiencies are ~ 80%, 65% and 50% respectively

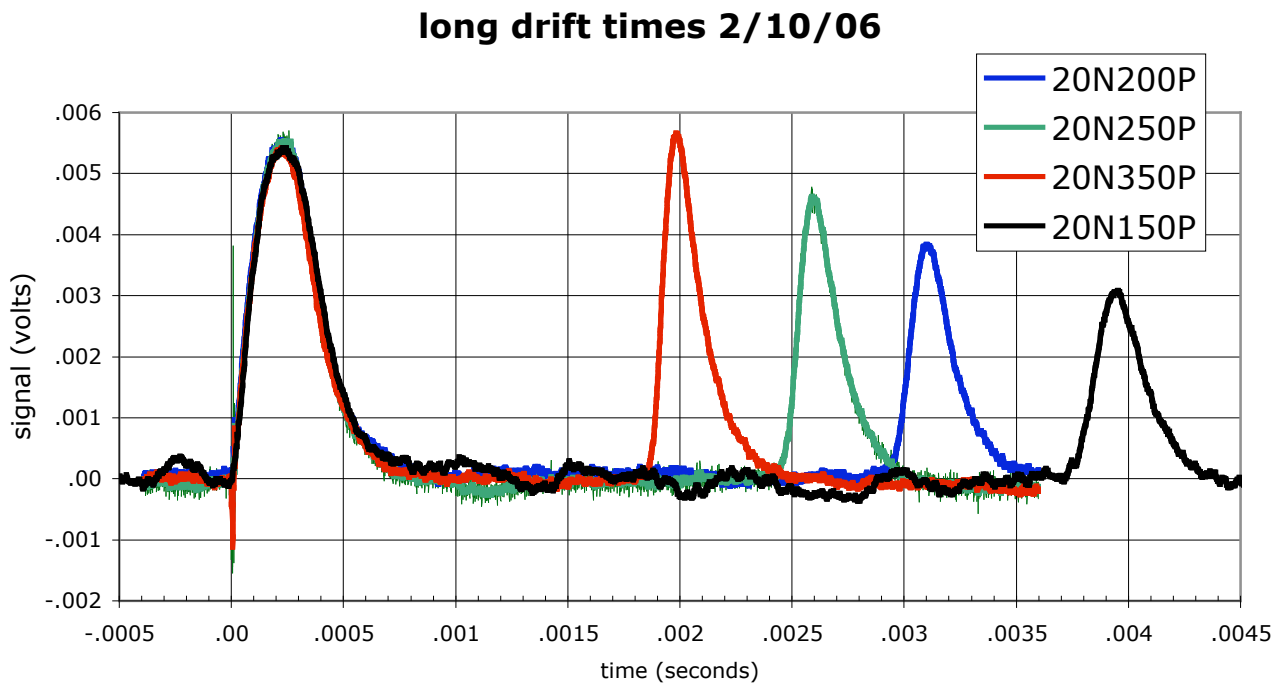


a plot of long drift times from another run a week later with fresh argon. An alternative way to calculate lifetimes would be to use just the anode signals at different drift times, making appropriate compensation for the different transmission efficiencies as the drift field changes at fixed cathode fields.

Credits: F. Cavanna, F. Arneodo et al. at LNGS for loan of PrM

E. Hahn for production of photocathodes (TCD)

W. Jaskierny for HV and readout electronics (SSD)

C. Kendziora and PAB group for assembly of cryogenic system (MSD)

J. Krider for understanding and development of PrM (TCD)

T. Tope for design of cryogenic system (MSD)