| REV | DESCRIPTION | DRAWN / DATE |
|---|---|---|
| | | APPROVED / DATE |
| | | |

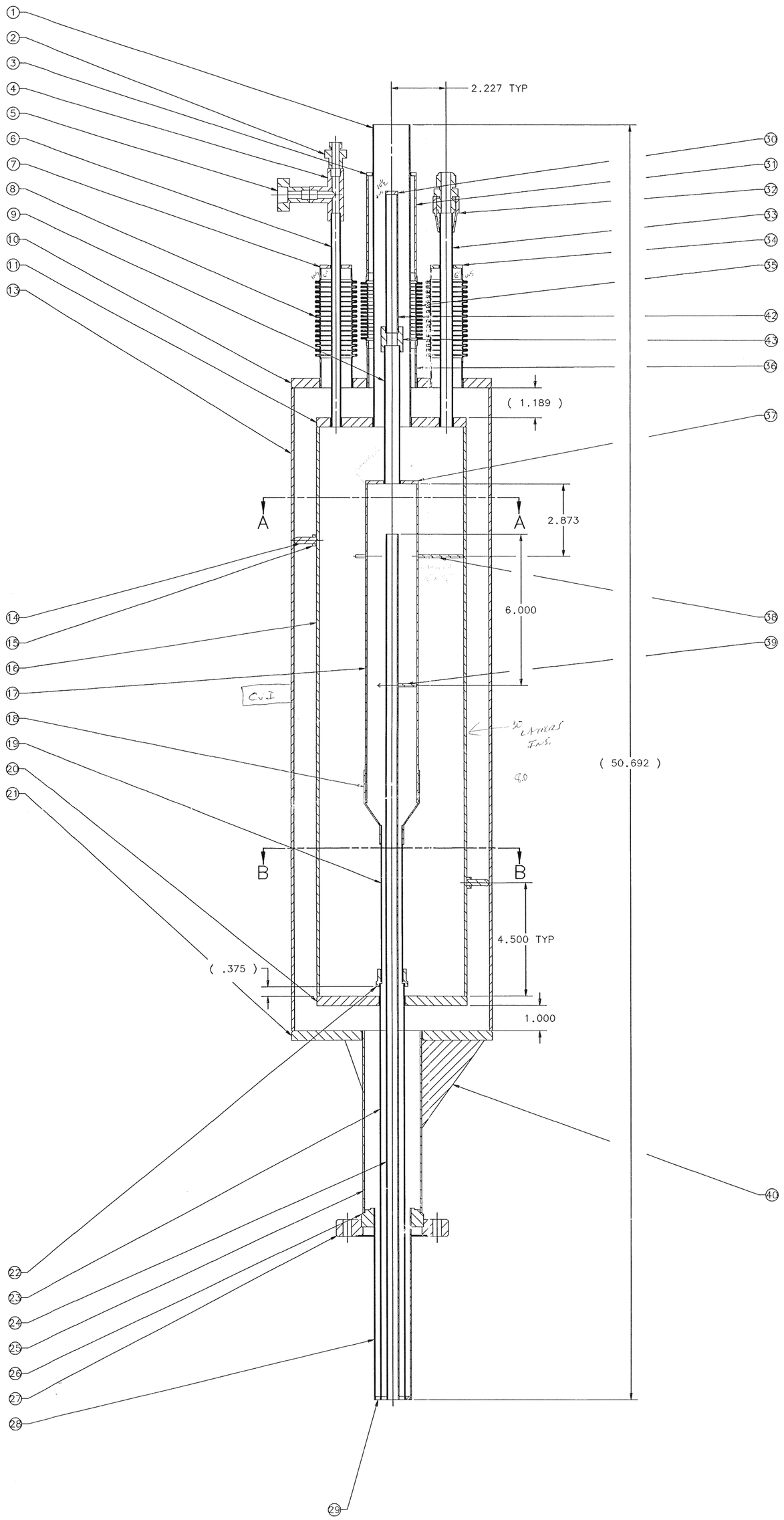


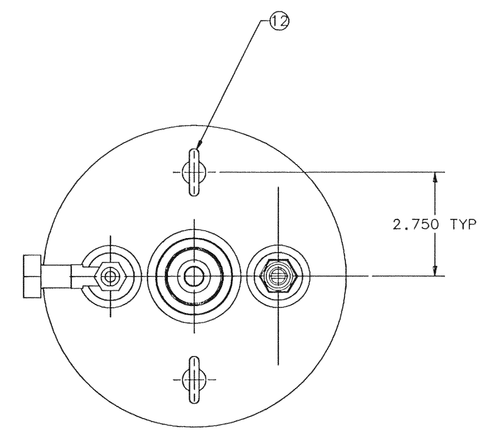


TOP

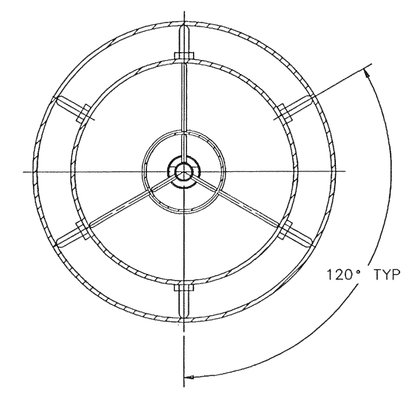


SECTION A-A

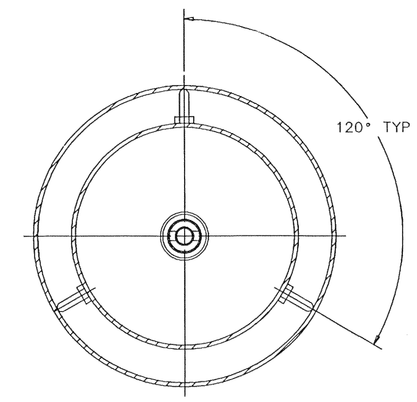


SECTION B-B

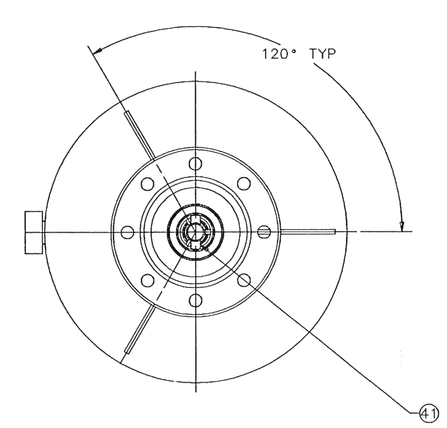


BOTTOM

UPDATES

9/14/04

| ITEM | PART NO. | DESCRIPTION OR SIZE | QTY |
|---|---|---|---|
| 43 | MA-381169 | ADAPTER, TRANSITION | 1 |
| 42 | | TUBE, ø1/2" OD X .035W X 5.50 LG, WELDED, SST, ASTM A249 | 1 |
| 41 | MA-381157 | SUPPORT, TABS | 2 |
| 40 | MA-381152 | GUSSET | 3 |
| 39 | MA-381163 | STAND-OFF, ARGON | 3 |
| 38 | MA-381162 | STAND-OFF, COPPER SHELL | 3 |
| 37 | MA-381170 | CAP, COPPER SHELL | 1 |
| 36 | | TUBE, ø2" OD X .065W X 1.56 LG, WELDED, 304 SST, ASTM A249 | 1 |
| 35 | 2922-MB-31376 | BELLOWS | 1 |
| 34 | MA-381164 | CAP, N2 BELLOWS | 1 |
| 33 | | TUBE, ø1/2" OD X .035W X 8.50 LG, WELDED, 304 SST, ASTM A249 | 1 |
| 32 | AEROQUIP | FITTING, FLARE BODY #2027T-8-8S, SLEEVE #900605-8-8S, NUT #1290-8-8S | 1 EA |
| 31 | | TUBE, ø2" OD X .065W X 3.85 LG, WELDED, 304 SST, ASTM A249 | 1 |
| 30 | | CAP, ø1/2 X 1/8 THICK | 1 |
| 29 | MA-381168 | CAP, BOTTOM | 1 |
| 28 | | TUBE, ø1-1/2" OD X .035W X 7.61 LG, WELDED, 304 SST, ASTM A249 | 1 |
| 27 | VARIAN #F04500250NC4 | FLANGE, CONFLAT, ø4-1/2OD X ø2-1/2ID | 1 |
| 26 | MA-381153 | ADAPTER | 1 |
| 25 | | PIPE, 2" IPS, SCH 5, 7.226" LG, WELDED, 304 SST, A312 | 1 |
| 24 | | TUBE, ø1/2" OD X .035W X 34.43 LG, WELDED, 304 SST, ASTM A249 | 1 |
| 23 | | TUBE, ø1" OD X .035W X 16.53 LG, WELDED, 304 SST, ASTM A249 | 1 |
| 22 | MA-381155 | UNION | 1 |
| 21 | MB-381159 | CAP, OUTER SHELL, TOP | 1 |
| 20 | MB-381161 | CAP, INNER SHELL, BOTTOM | 1 |
| 19 | | TUBE, COPPER, ø7/8" OD X .032W X 6.211" LG, TYPE M | 1 |
| 18 | MUELLEER BRASS # W-1077 | REDUCER, COPPER | 1 |
| 17 | | TUBE, COPPER, ø2" OD X .058W X 12.71" LG, TYPE M | 1 |
| 16 | | TUBE, ø6" OD X .109W X 22.65 LG, WELDED, 304 SST, ASTM A249 | 1 |
| 15 | | NUT, 1/4-20, SST | 6 |
| 14 | MA-381167 | STAND-OFF, G10 | 6 |
| 13 | | TUBE, ø8" OD X .109W X 25.59" LG, WELDED, 304 SST, ASTM A249 | 1 |
| 12 | MA-381154 | EYEBOLT, MODIFIED, GRAINGER #2G692 | 2 |
| 11 | MB-381160 | CAP, INNER SHELL, TOP | 1 |
| 10 | MB-381158 | CAP, OUTER SHELL, TOP | 1 |
| 9 | | TUBE, ø1/2" OD X .035W X 5.50 LG, COPPER, TYPE M | 1 |
| 8 | 6065-MC-211099 | BELLOWS | 2 |
| 7 | MA-381166 | CAP, LEVEL PROBE BELLOWS | 1 |
| 6 | | TUBE, ø3/8" OD X .035W X 8.50 LG, WELDED, 304 SST, ASTM A249 | 1 |
| 5 | SWAGELOK #SS-6-TSW-7-4 | CONNECTOR, FEMALE, BUTTWELD | 1 |
| 4 | SWAGELOK #SS-6-TSW-3 | TEE, UNION, BUTTWELD | 1 |
| 3 | MA-381165 | CAP, TOP | 1 |
| 2 | MA-381156 | CONNECTOR, PIPE, MALE, BUTTWELD MODIFIED, SWAGELOK #SS-400-1-4W | 1 |
| 1 | | TUBE, ø1-1/2" OD X .035W X 12.00 LG, WELDED, 304 SST, ASTM A249 | 1 |

BILL OF MATERIAL

| UNLESS OTHERWISE SPECIFIED | | | ORIGINATOR | BEN HANSEN | 7.30.04 |
|---|---|---|---|---|---|
| .XX | .XXX | ANGLES | DRAWN | Robert Hibbard | 8.16.04 |
| ± .02 | ± .005 | ± .5° | CHECKED | | |
| 1. BREAK ALL SHARP EDGES 1/64 MAX. | | | APPROVED | | |
| 2. DO NOT SCALE DRAWING. | | | USED ON | | |
| 3. DIMENSIONS BASED UPON Asme Y14.5M-1994 | | | | | |
| 4. MAX ALL MACH SURFACES 125 | | | MATERIAL | SEE BILL OF MATERIAL | |

FERMI NATIONAL ACCELERATOR LABORATORY
UNITED STATES DEPARTMENT OF ENERGY

# BEAMS CRYOGENIC SYSTEMS FLARE CONDENSER ASSEMBLY

| SCALE | FILMED | DRAWING NUMBER | REV |
|---|---|---|---|
| 1/2 | | 1650-ME-381151 | |

CREATED WITH I-DEAS 8m2

-- REDUCED COPY -- DO NOT SCALE --