REV	DESCRIPTION	DRAWN	DATE
		APPROVED	DATE

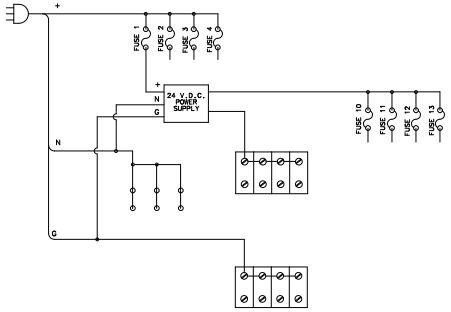

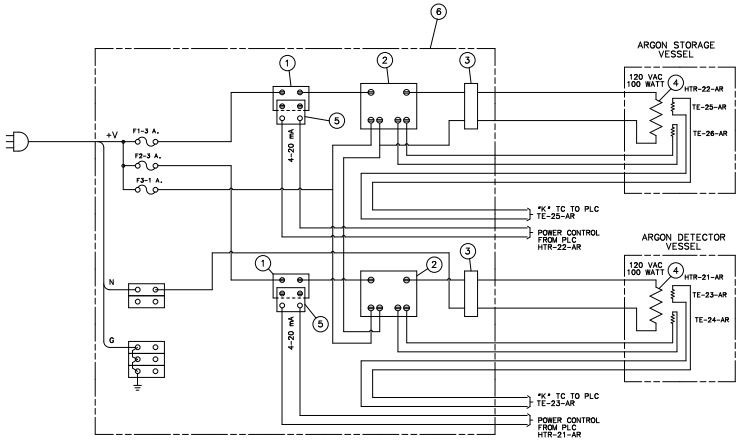

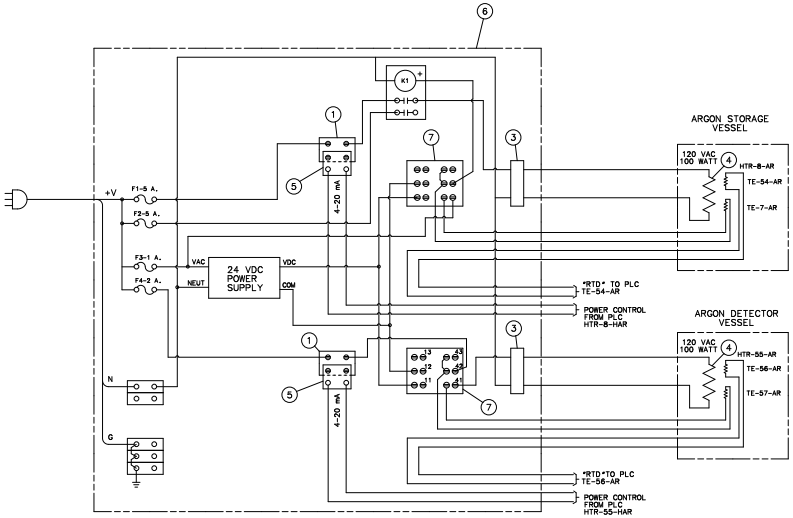

7	COM'L	OMEGA RTD ALARM LIMIT MODULE PART #XXXXXXXXXXXXXX	2
6	COM'L	HAMMOND ENCLOSURE 16"x16"x7" STOCK # 91F2192	2
5	COM'L	OMEGA PCM1 MODULE	4
4	COM'L	WATLOW HEATER	4
3	COM'L	RFI FILTER-CLI TECHNOLOGY NEMARK #B1F4557	4
2	COM'L	OMEGA LIMIT CONTROLLER #CN3261-KF	2
1	COM'L	SOLID STATE RELAY DC INPUT,10 A, AC OUTPUT OMEGA #SSR3300C10	4

UNLESS OTHERWISE SPECIFIED	ORIGINATOR	D.MARKLEY	15-MAY-2006
	DRAWN	N.CADENA	15-MAY-2006
± ± ±	CHECKED		
1. BREAK ALL SHARP EDGES .005	APPROVED		
2. DO NOT SCALE DRAWING.	USED ON		
3. DIMENSIONS BASED UPON:			
4. MAX. ALL MACH. SURFACES ✓	MATERIAL		
5. DRAWING UNITS:			

FERMI NATIONAL ACCELERATOR LABORATORY
UNITED STATES DEPARTMENT OF ENERGY

FLARE-P942
ELECTRICAL SYSTEMS-DIAGRAMS
LAR PURIFICATION SLOW CONTROL

SCALE	DRAWING NUMBER	SHEET	REV
	3942.520-EE-435364	2 OF 2	

CREATED WITH : IdeasTNXSeries GROUP: PPD/MECHANICAL DEPARTMENT