REV	DESCRIPTION	DRAWN	DATE
		APPROVED	DATE

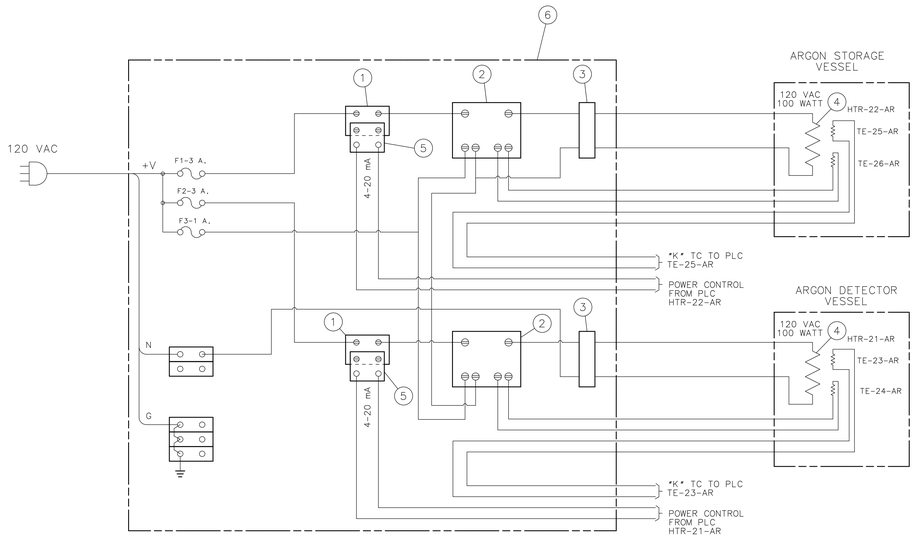

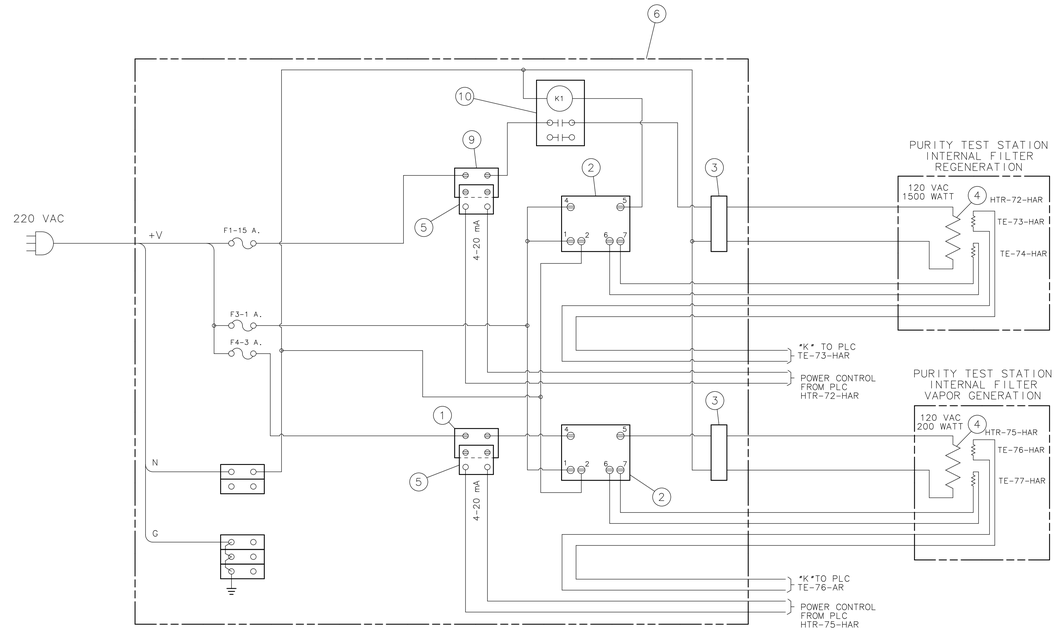

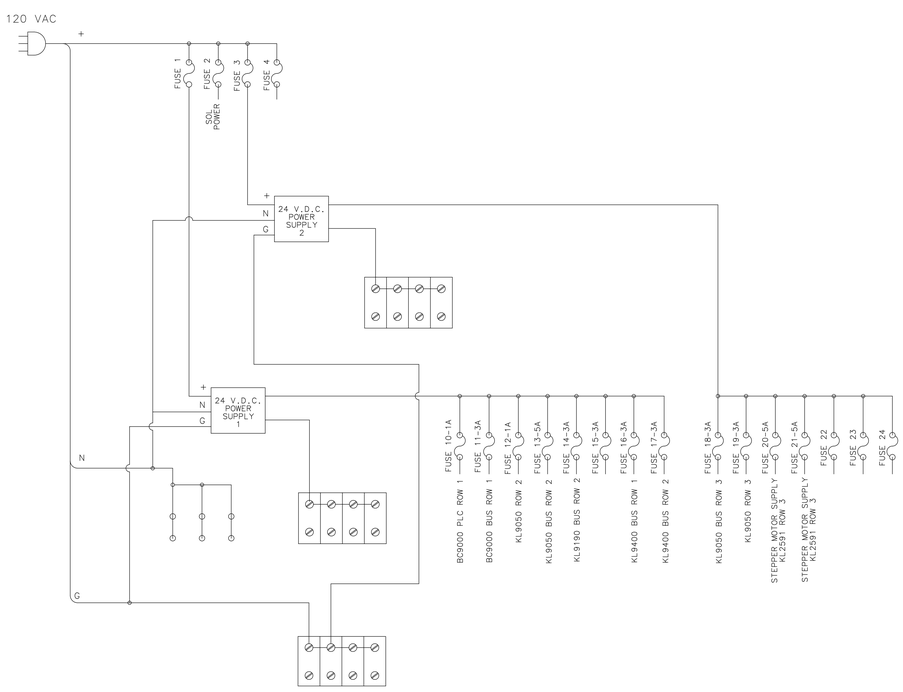

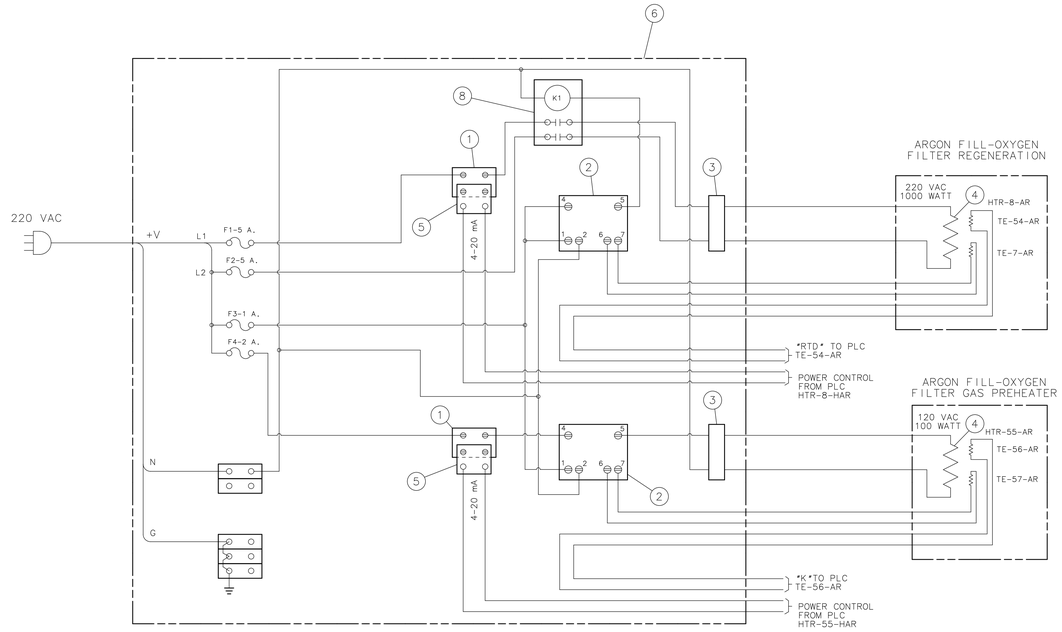

10	COM'L	MAGNETIC CONTACTOR OMEGA #MCI-2-30-120	1
9	COM'L	SOLID STATE RELAY DC INPUT,25 A. AC OUTPUT OMEGA #SSR3300C10	1
8	COM'L	MAGNETIC CONTACTOR OMEGA #MCI-2-30-240	1
7	COM'L	OMEGA RTD ALARM LIMIT MODULE PART #DRG-AR-RTD	2
6	COM'L	HAMMOND ENCLOSURE 16"x16"x7" STOCK # 91F2192	2
5	COM'L	OMEGA PCM1 MODULE	4
4	COM'L	WATLOW HEATER	4
3	COM'L	RFI FILTER-CII TECHNOLOGY NEWARK #81F4557	4
2	COM'L	OMEGA LIMIT CONTROLLER #CN3261-KF	2
1	COM'L	SOLID STATE RELAY DC INPUT,10 A. AC OUTPUT OMEGA #SSR3300C10	4

UNLESS OTHERWISE SPECIFIED	ORIGINATOR D.MARKLEY	15-MAY-2006
	DRAWN N.CADENA	15-MAY-2006
± ± ±	CHECKED	
1. BREAK ALL SHARP EDGES MAX.	APPROVED	
2. DO NOT SCALE DRAWING. 3. DIMENSIONS BASED UPON	USED ON	
4. MAX. ALL MACH. SURFACES √	MATERIAL	
5. DRAWING UNITS:		

FERMI NATIONAL ACCELERATOR LABORATORY
UNITED STATES DEPARTMENT OF ENERGY

FLARE-P942
ELECTRICAL SYSTEMS-DIAGRAMS
LAR PURIFICATION SLOW CONTROL

SCALE	DRAWING NUMBER	SHEET	REV
	3942.520-EE-435364	2 OF 2	

CREATED WITH : Ideas11NXSeries GROUP: PPD/MECHANICAL DEPARTMENT

Created: 13:26:37 on 01-09-06 (D-M-Y) By: cadena State: 1-INITIAL