U.S. LArTPC Detector Activities

The International Scoping Study Meeting of

Neutrino Factory and Super-beam Facility

April 24-29, 2006 @ RAL

Scott Menary

Detector Concept

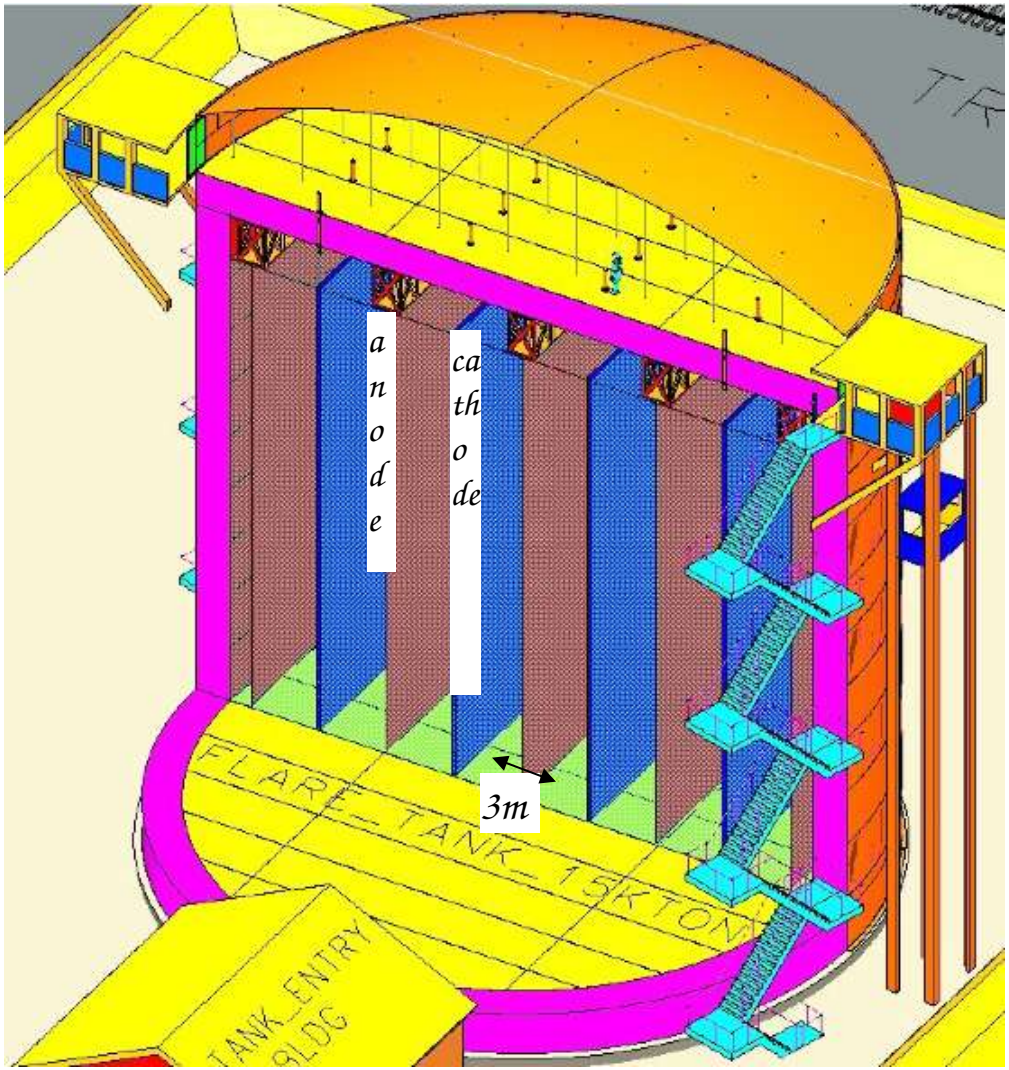

Basic structure is a Liquified Natural Gas (LNG) tank

R&D Issues:

- long wires
- long drift
- start from atmosphere

Proposed NuMI LArTPC R&D Path

Fermilab, Michigan State, Princeton, Tufts, UCLA, Yale, York (Canada)

from our submission to NuSAG (Fermilab FN-0776-E)*

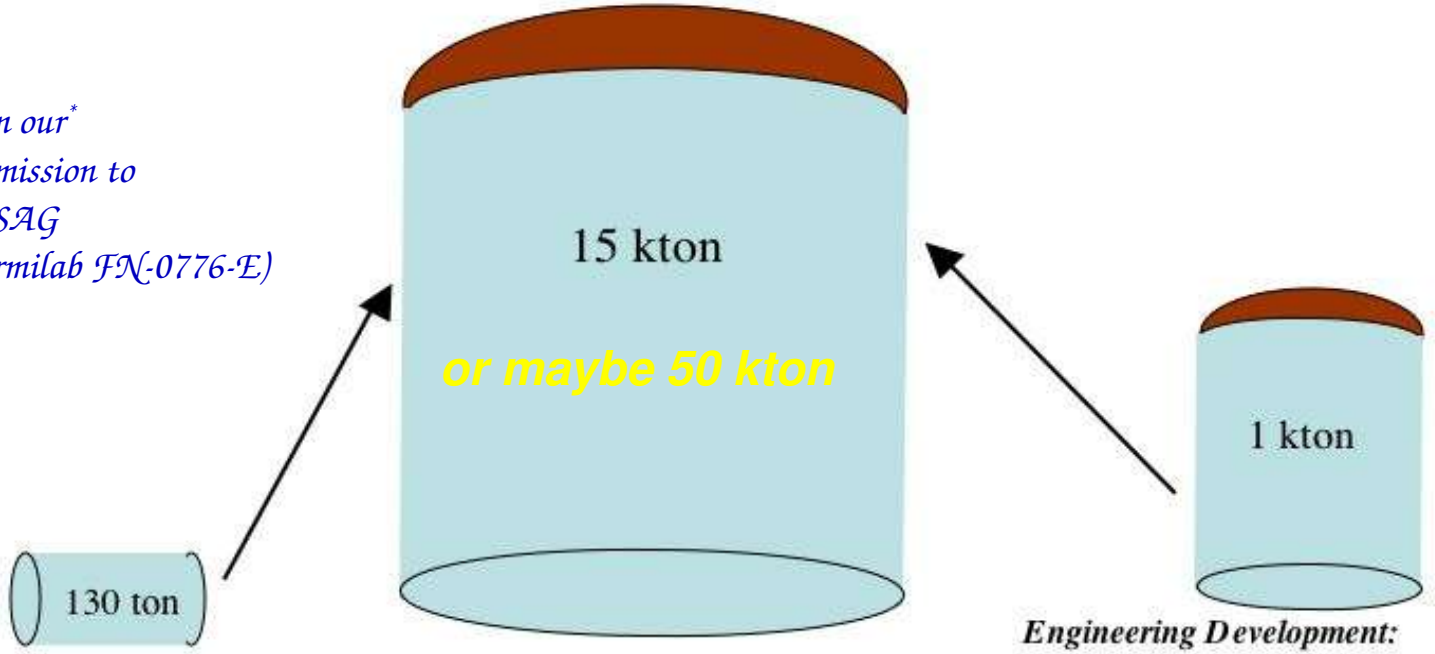

***Physics Development** using **existing** technology*
Record **complete neutrino interactions**: (ν_e & ν_μ)
Establish **Physics Collaboration**
Develop **Event Identification**,
Develop **Reconstruction**,
Develop **Analysis**,
Establish successful **Technology transfer**

Engineering Development:
Construction of Tank
Argon Purity
Mechanical Integrity of TPC
Readout S/N
Microphonics due to Argon Flow

Technical Setups

Purity Monitor Development	Materials Tests	5 m Drift Demonstration	Long Wires Tests	Electronics Development

Physics Development *using* ***existing*** *technology*

Record **complete neutrino interactions**: (ν_e & ν_μ)

Establish **Physics Collaboration**

Develop **Event Identification**,

Develop **Reconstruction**,

Develop **Analysis**,

Establish successful **Technology transfer**

Emphasis to develop `physics analysis capabilities' on a unique sample of neutrino interactions:

Technically state-of-the-art -

- can act as test-bed for technical developments but not the primary focus

NuMI beam-line

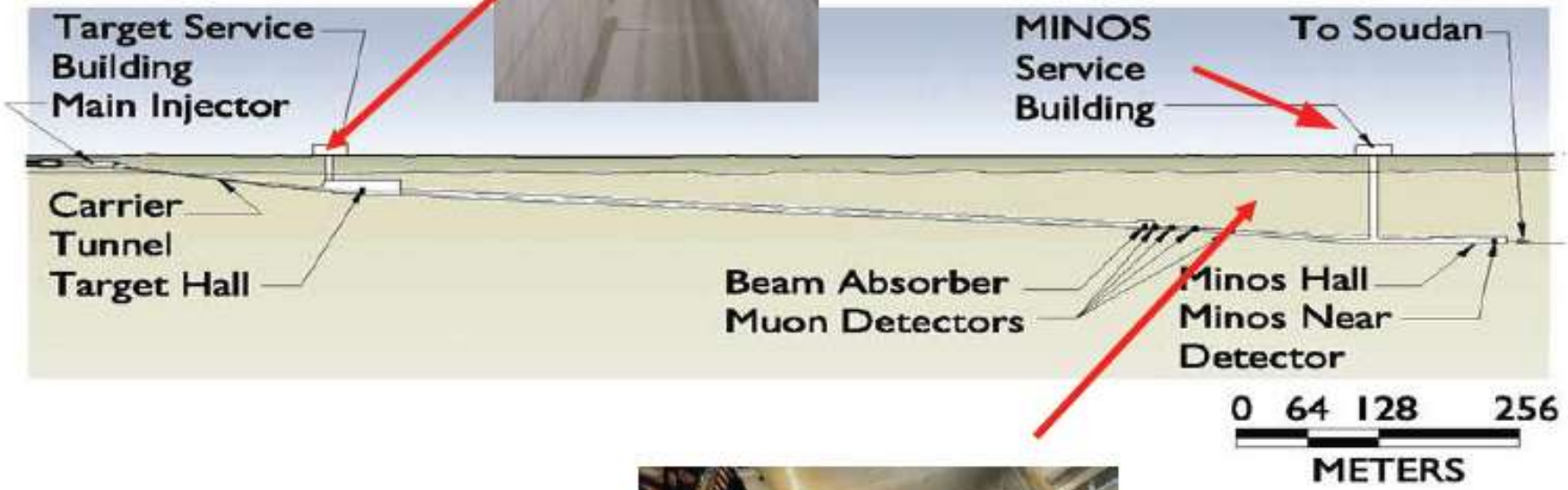

2 GeV off-axis NuMI beam

Electron Neutrinos in MINOS Surface Building

From the NOvA Proposal March 15, 2005

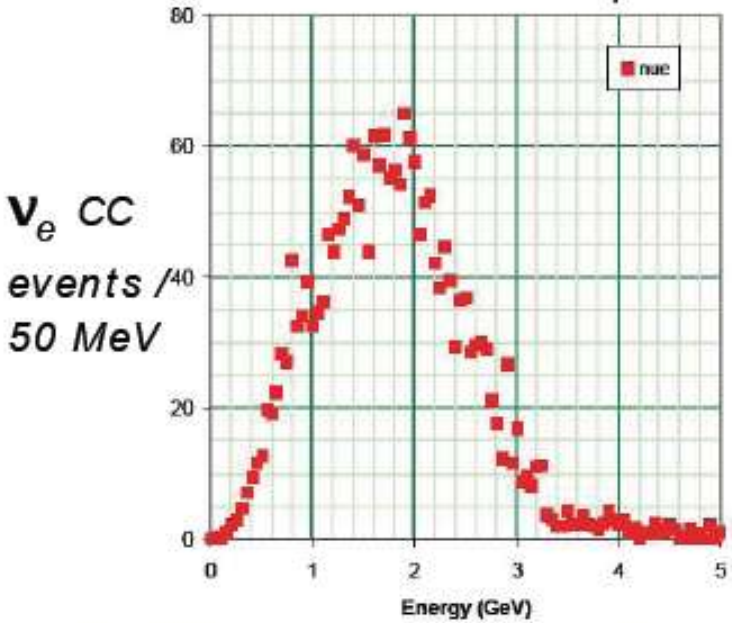

- *The charged current ν_e event spectrum in the MINOS surface building.*
- *The ν_e event spectrum peaks just below 2 GeV.*
- *There are ~2,000 ν_e events shown here for 6.5E20 POT and the 20.4 ton fiducial mass NOvA near detector.*

NuMI is presently providing ~2E20 POT per year.

- ***a 50 ton (fid. vol) LAr TPC detector will see ~1600 ν_e events/year***

Muon Neutrinos in MINOS Surface Building

From the NOvA Proposal March 15, 2005

ν_μ *CC events / 50 MeV*

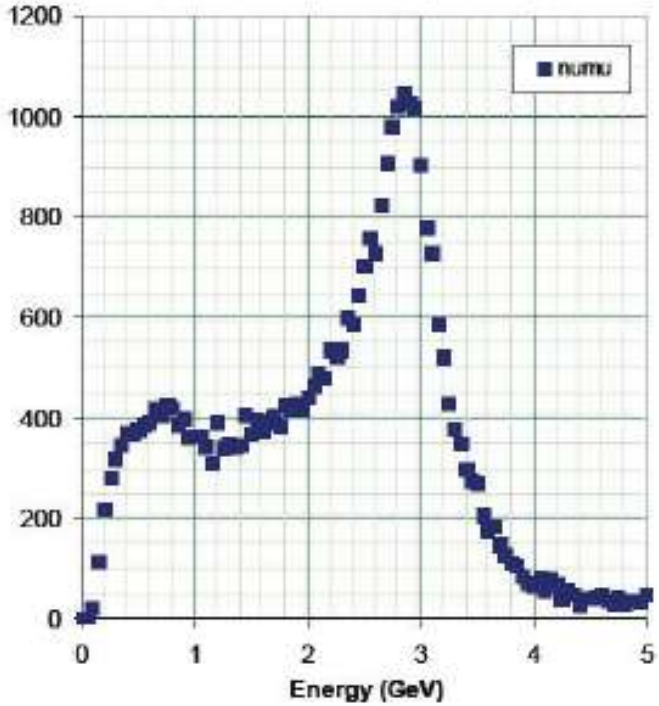

- *Same assumptions as previous slide, except this shows ~15,000 muon neutrinos.*
- *The ν_μ peak at ~2.8 GeV is from Kaon decay.*

- ***a 50 ton (fid. vol.) LArTPC detector will see ~34000 νCC events/year***

MiniBooNE already sees events from the NuMI beam

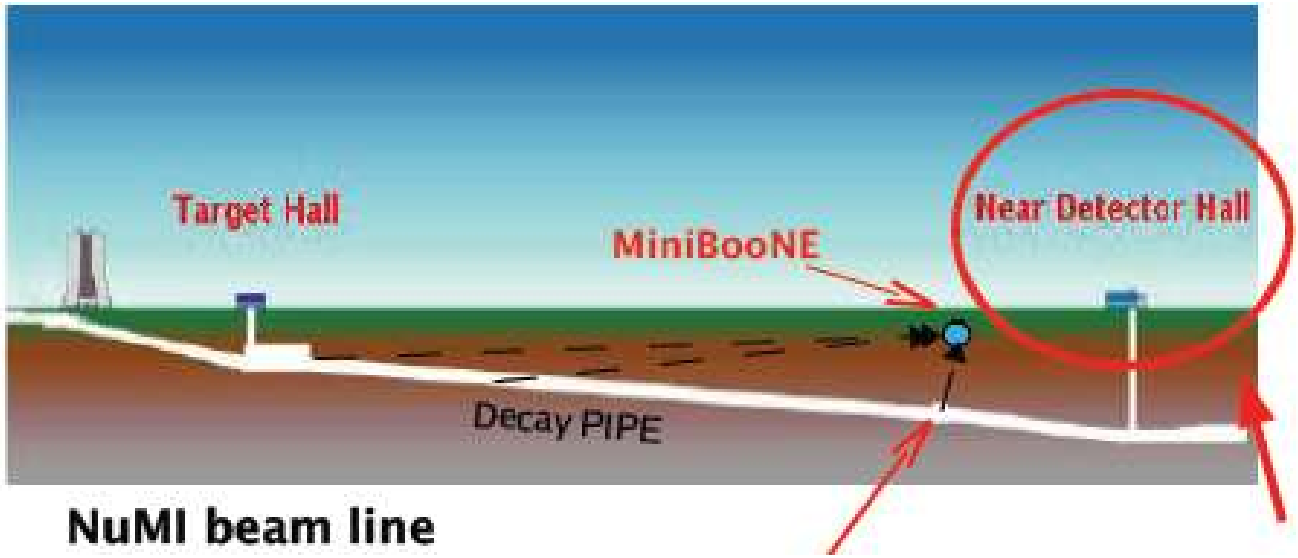

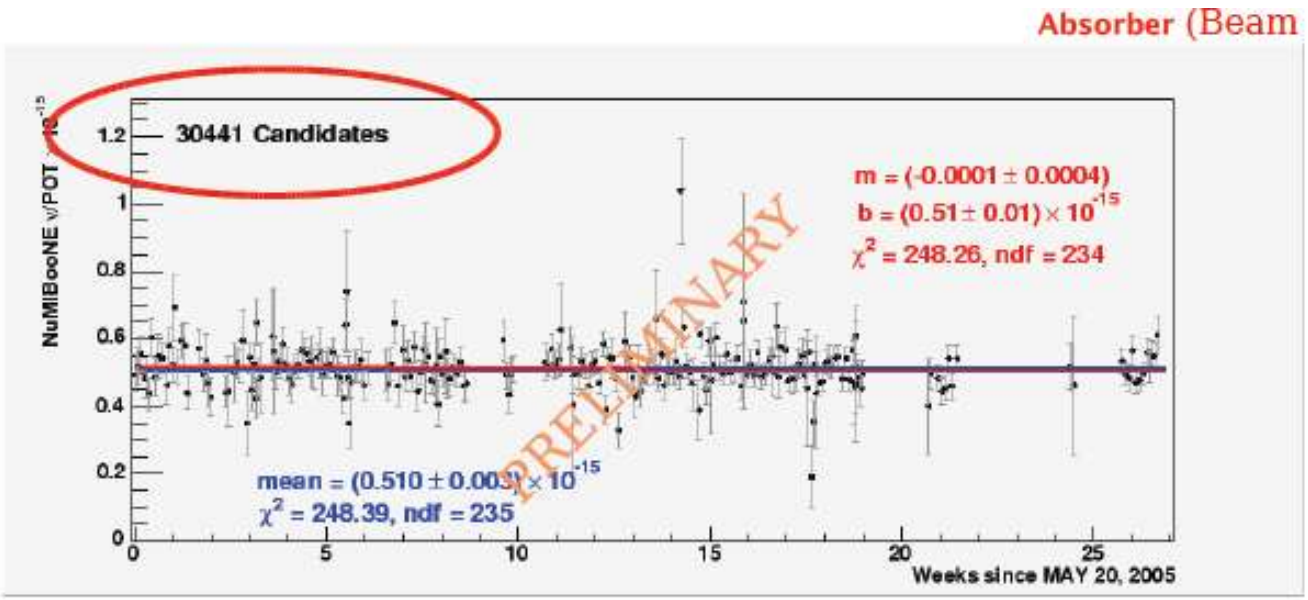

Simple cuts -> Neutrinos hitting MiniBooNE

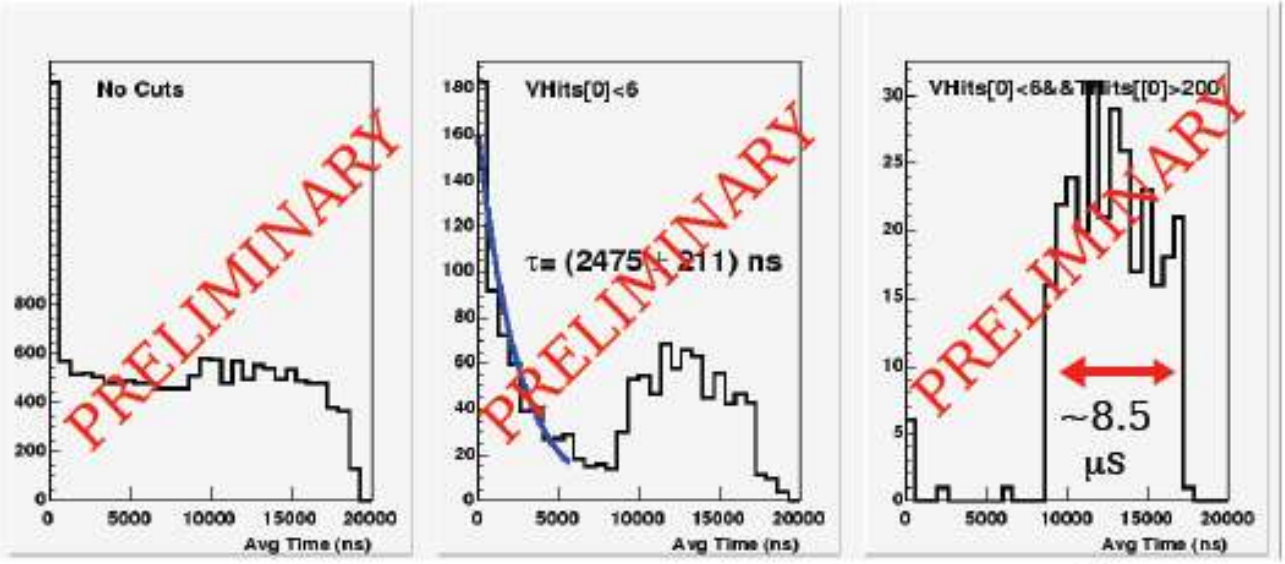

width of beam pulse
from Main Injector to NuMI

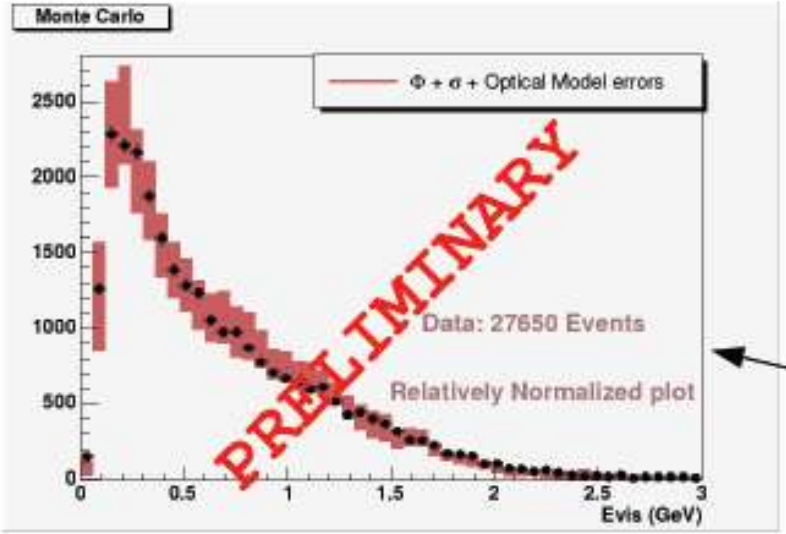

Already beginning to
understand off-axis
NuMI beam using
MiniBooNE

Engineering Development:
Construction of Tank
Argon Purity
Mechanical Integrity of TPC
Readout S/N
Microphonics due to Argon Flow

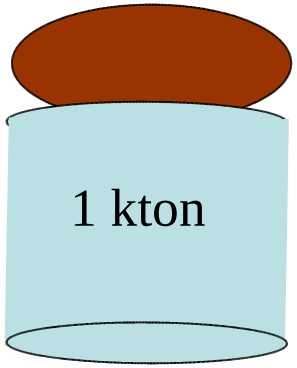

Emphasis on learning about and demonstrating we can resolve issues of large tank

Appropriate scale is not certain (0.5 kton to ?)

Essential demonstration? at what scale?

Does such a device need a `physics' program?

Technical Setups

Purity Monitor Development	Materials Tests	5 m Drift Demonstration	Long Wires Tests	Electronics Development

Specific identifiable topics where we (outside ICARUS) need to gain experience, establish infrastructure and approach issues relevant to large tank.

Electronics for small systems - Michigan State

Event Analysis and identification - Tufts

Purity and small chamber study - Yale
Event Reconstruction -Yale

LAr into the GLoBeS framework - York

Fermilab Resources: ~ 4 physicists, 3.5 engineers, lead-technician, technicians

embedded in Lab: *vacuum deposition (photocathodes)*
wire plane fabrication (Purity Monitor grids and small chamber)
ANSYS analysis,
mechanical and electrical design and fabrication

Budget for materials: $100,000/year for this and next 2 years (severe limitation)

Summary

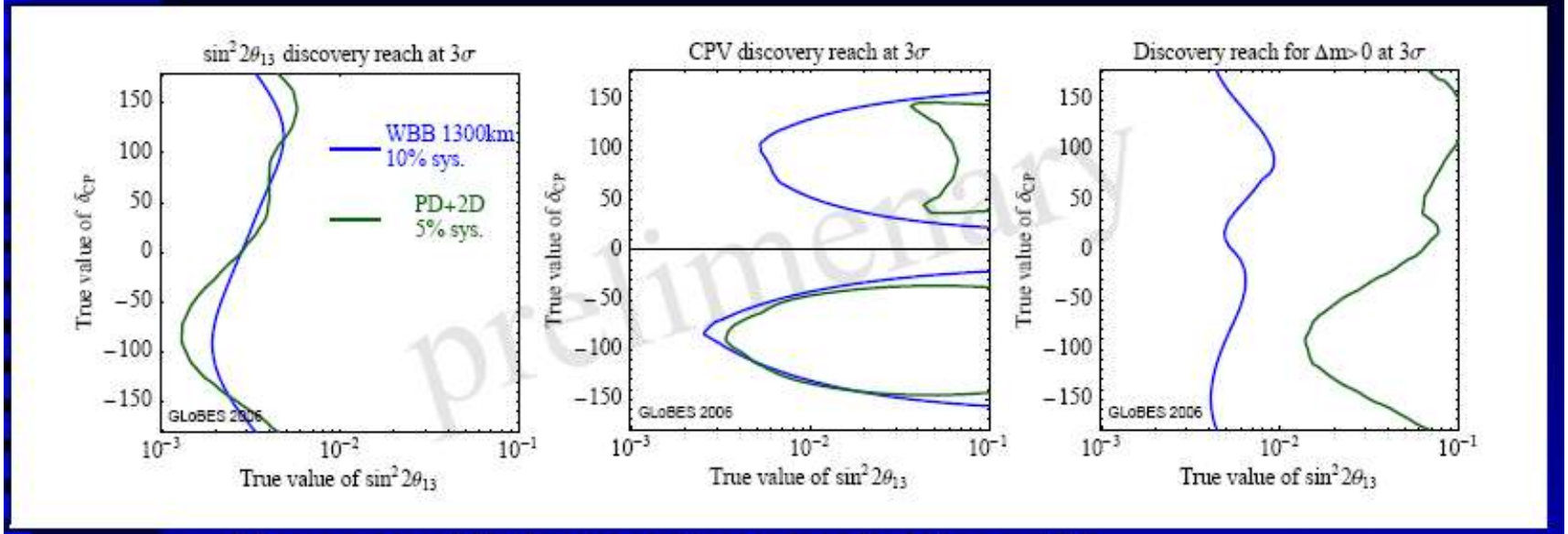

How would that picture look like with

- Liquid Argon
- 2nd peak in the OA spectrum

P. Huber – p.20/21

Status of work on Argon purity and plans for contamination studies.

Status of Mechanical tests on wires.

Status of Electronics and Electrical issues studies.

State of Mechanical Design for the large tank.

Some of the important issues not under study :

Cosmic rejection - fundamental: effects on physics,

logistical: automated pattern recognition

Electronics development - electronics nearer the wires (in cold)

Baseline Model

Maintain open attitude to novel technologies

Single Pass Liquid Argon Purification System Schematic

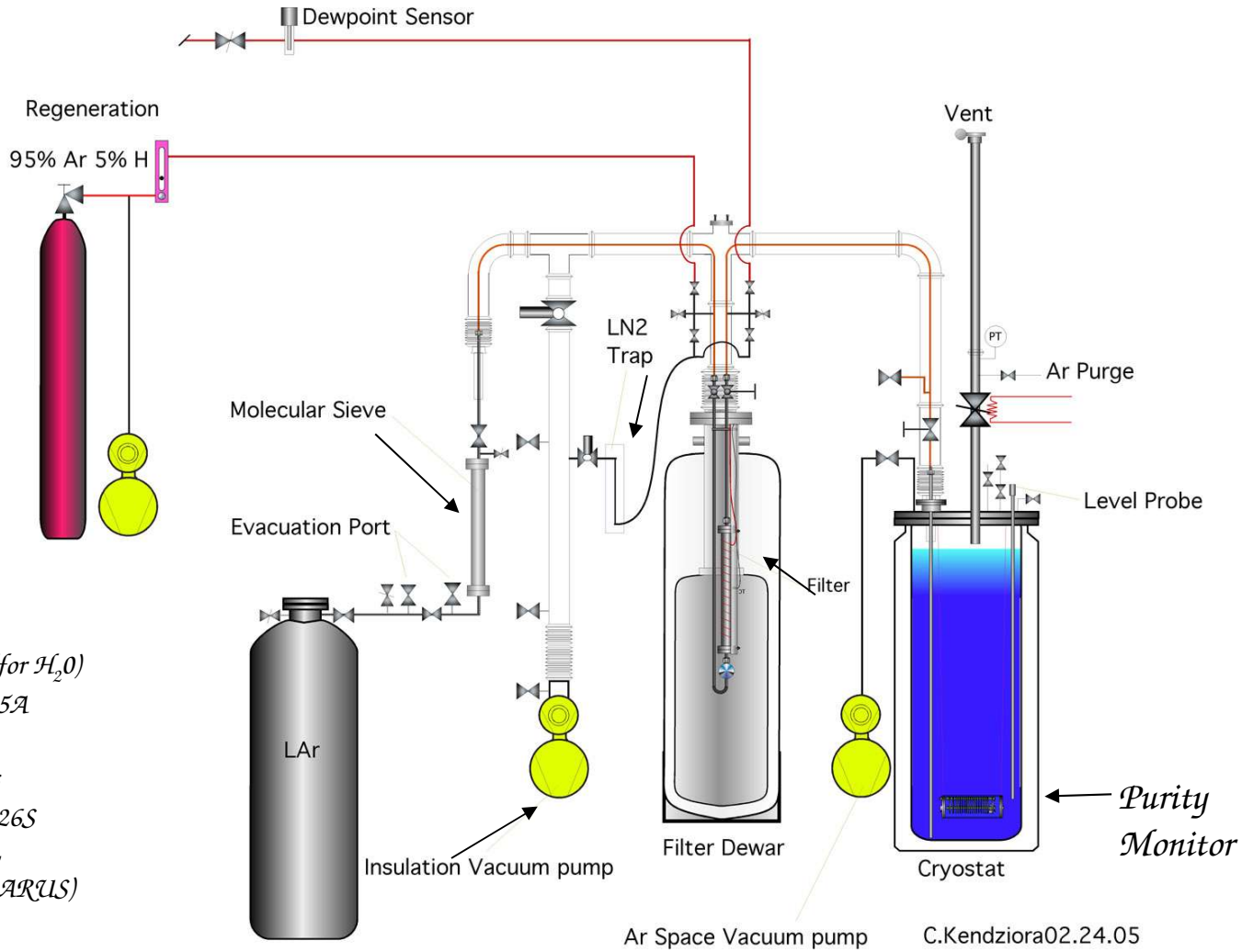

Molecular sieve (for H_20) is Sigma-Aldrich 5A

'Filter' (for O_2) is Engelhard Cu-0226S (CuO on alumina, different from ICARUS)

Single Pass Filtering System at PAB

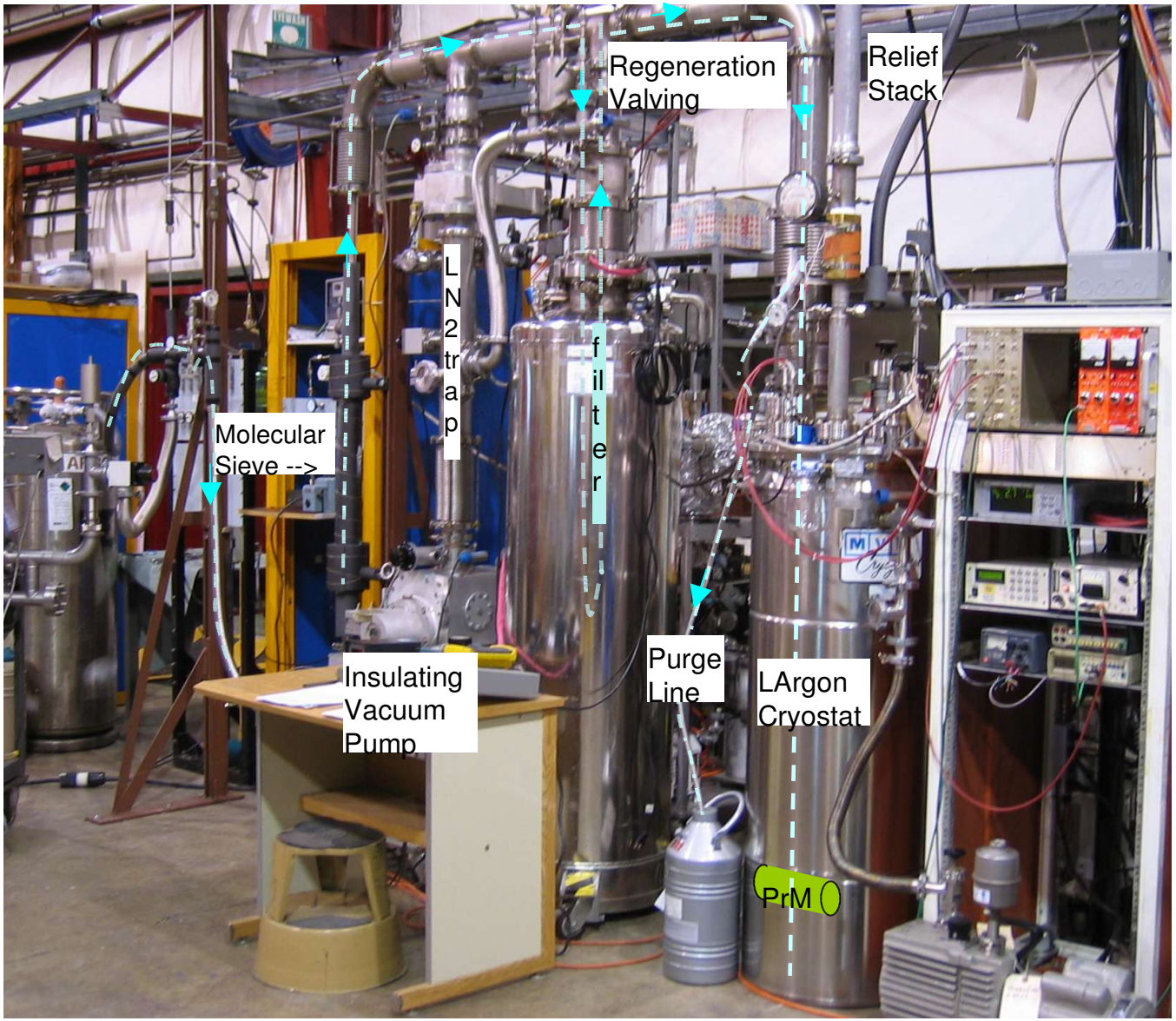

Schematic of Liquid Argon Purity Monitor

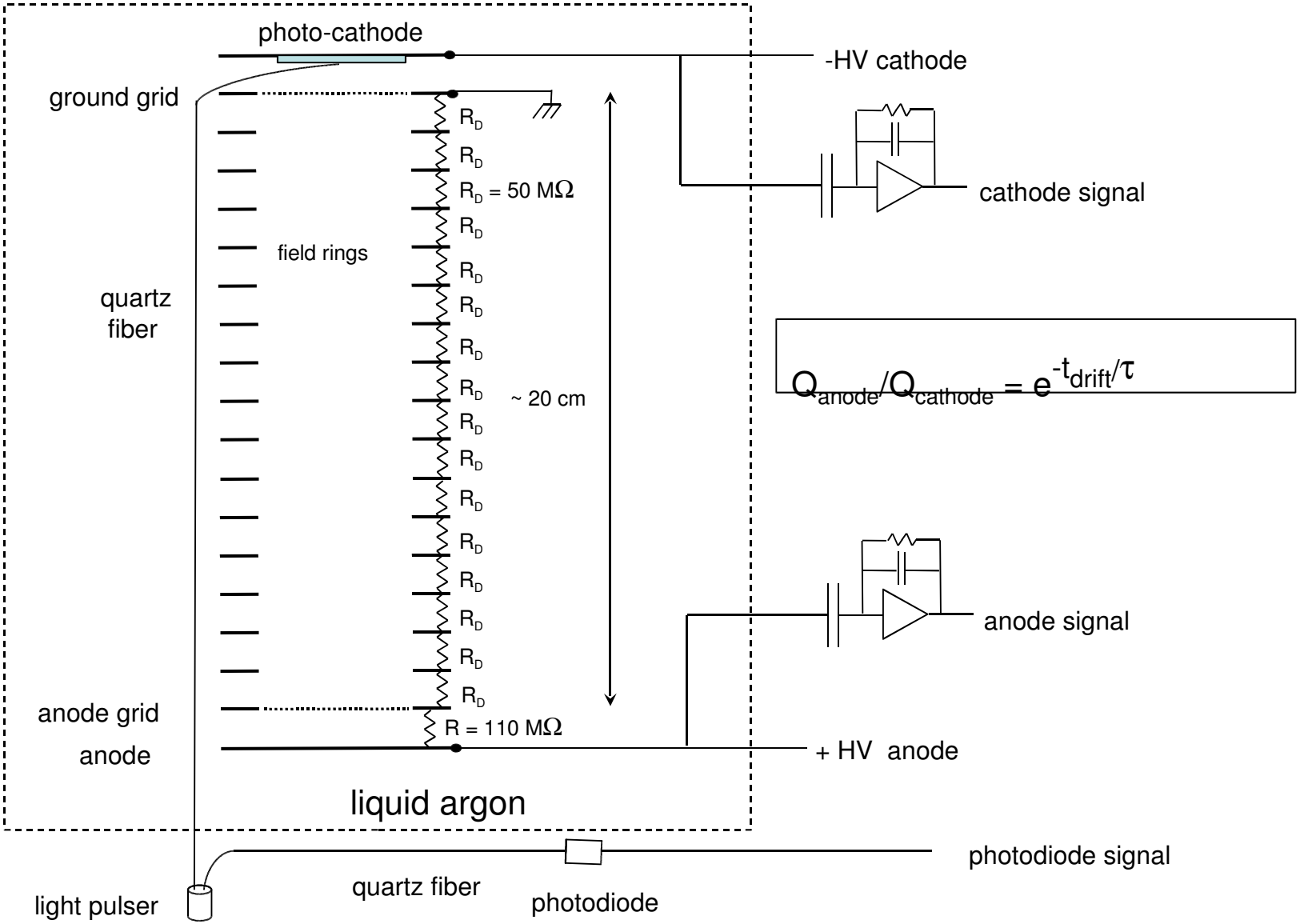

$$Q_{anode}/Q_{cathode} = e^{-t_{drift}/\tau}$$

ICARUS PURITY MONITOR

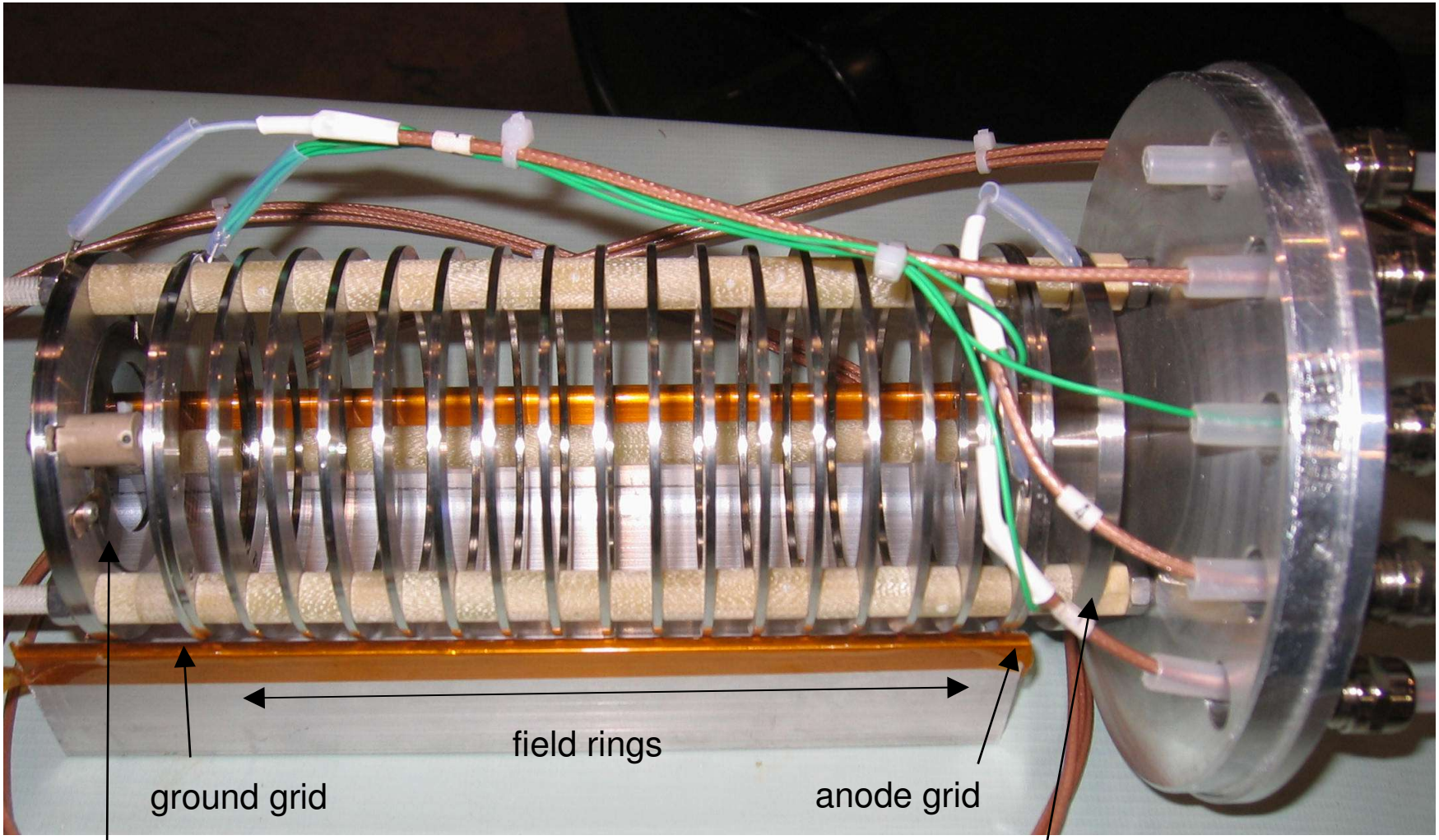

photo-cathode (gold - Lab 7)

anode

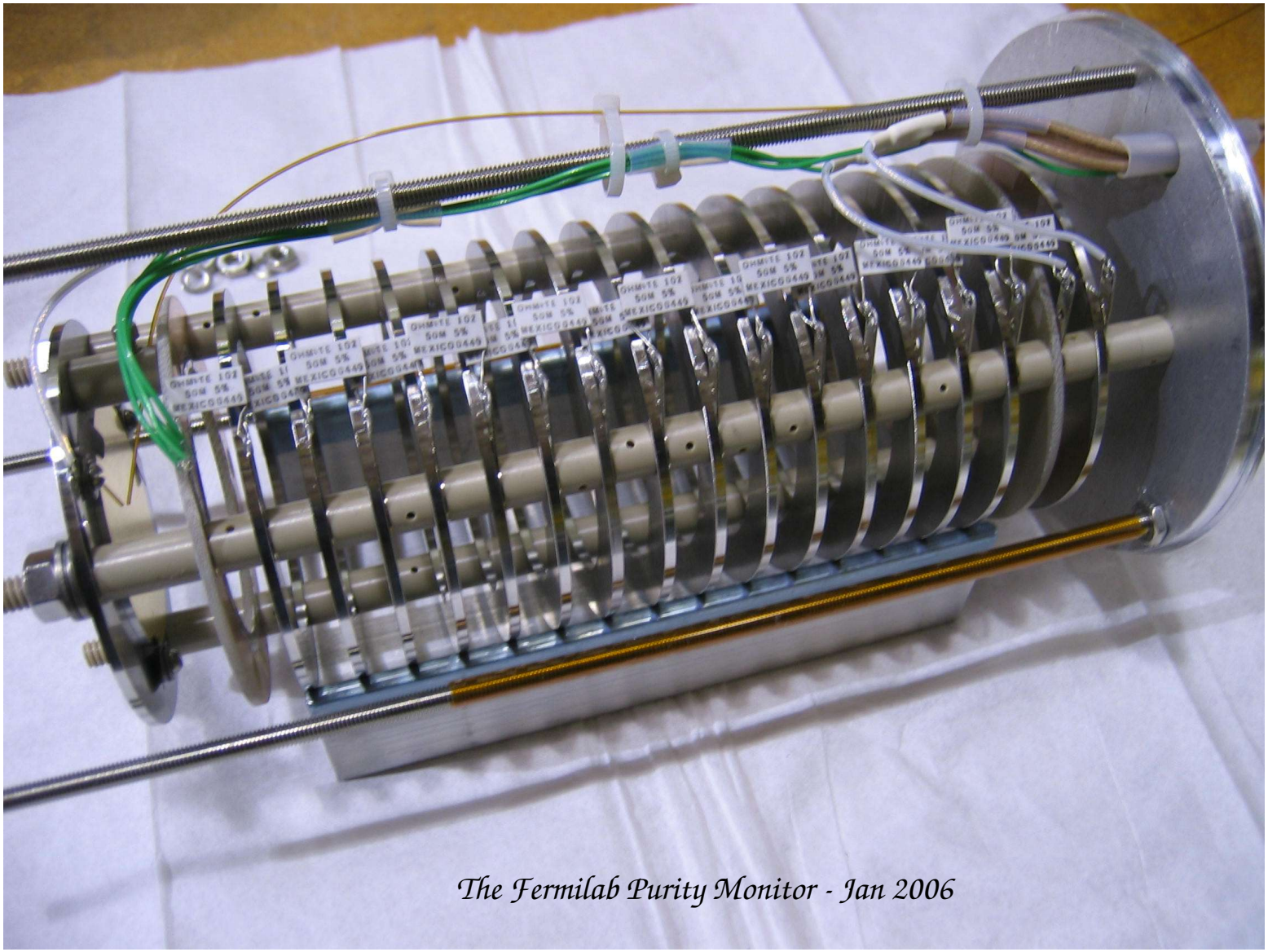
The Fermilab Purity Monitor - Jan 2006

Argon purity studies

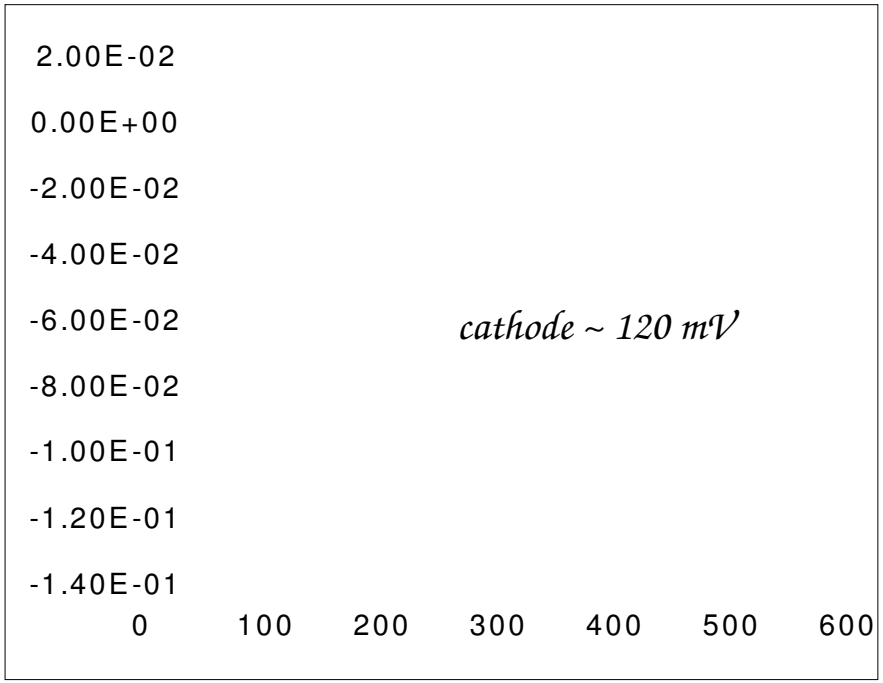

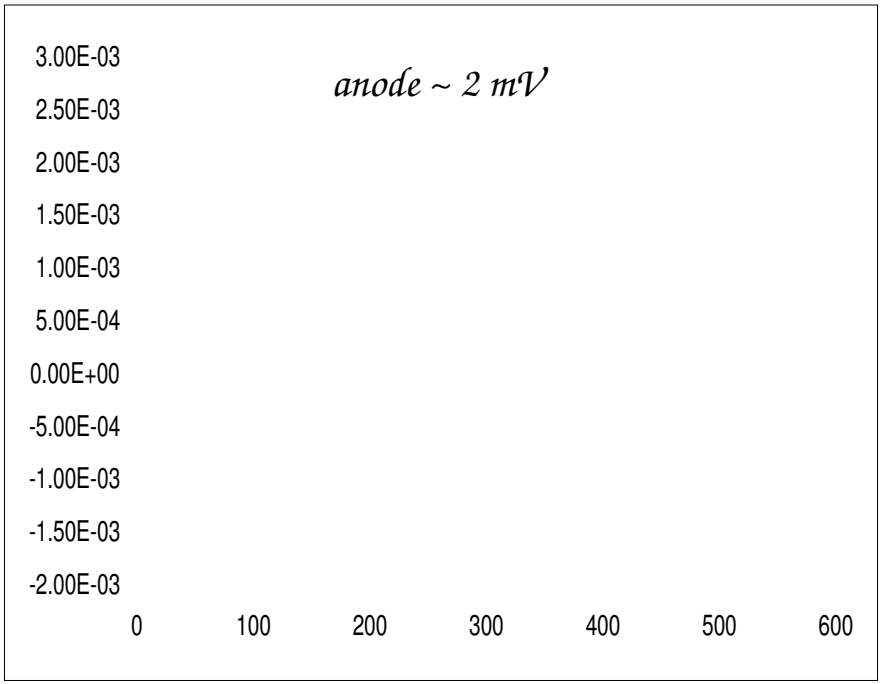

First Anode Signal of any sort (tiny) from Purity Monitor January 27th 2006

Argon purity studies

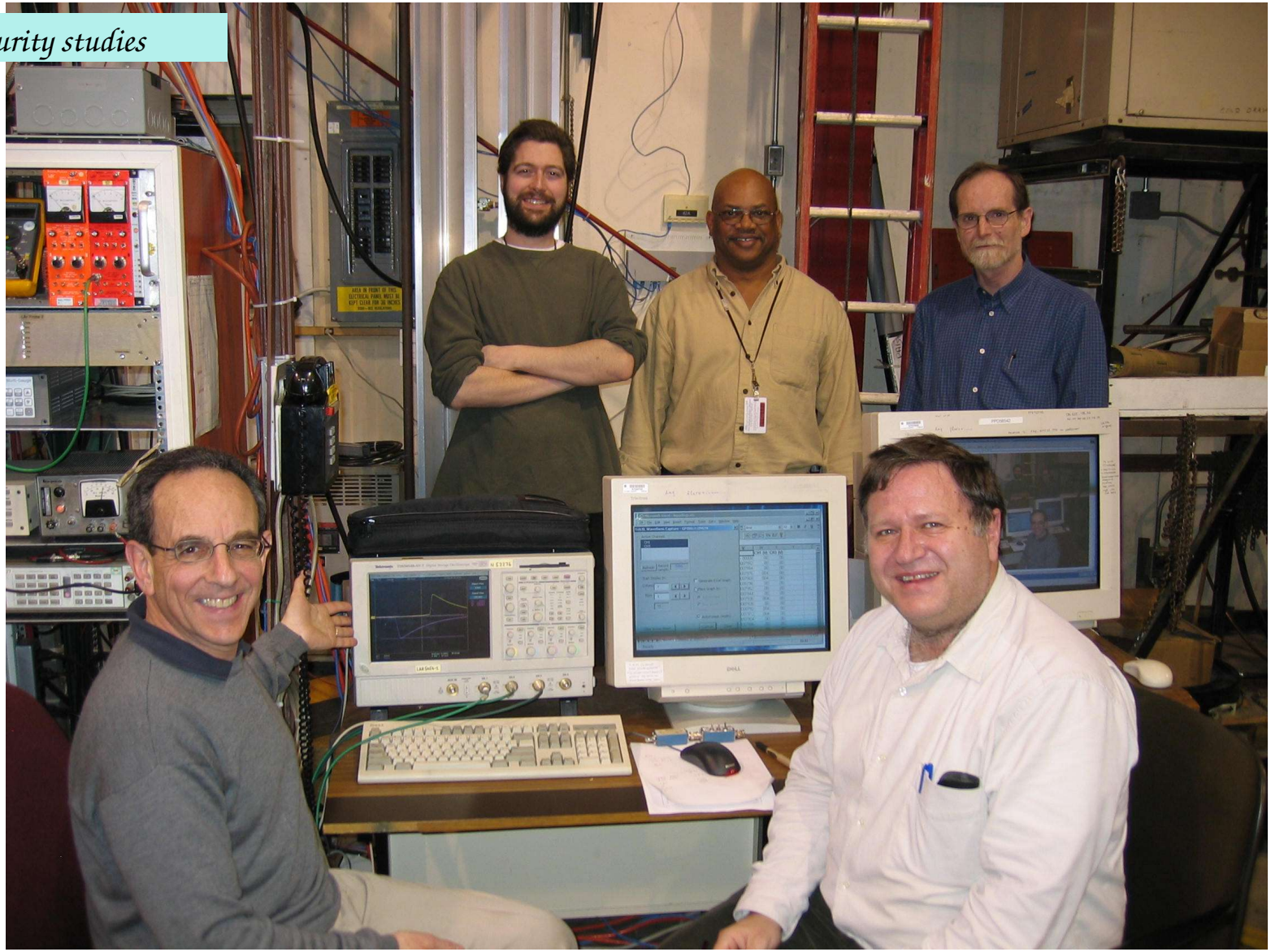

why are these people smiling?

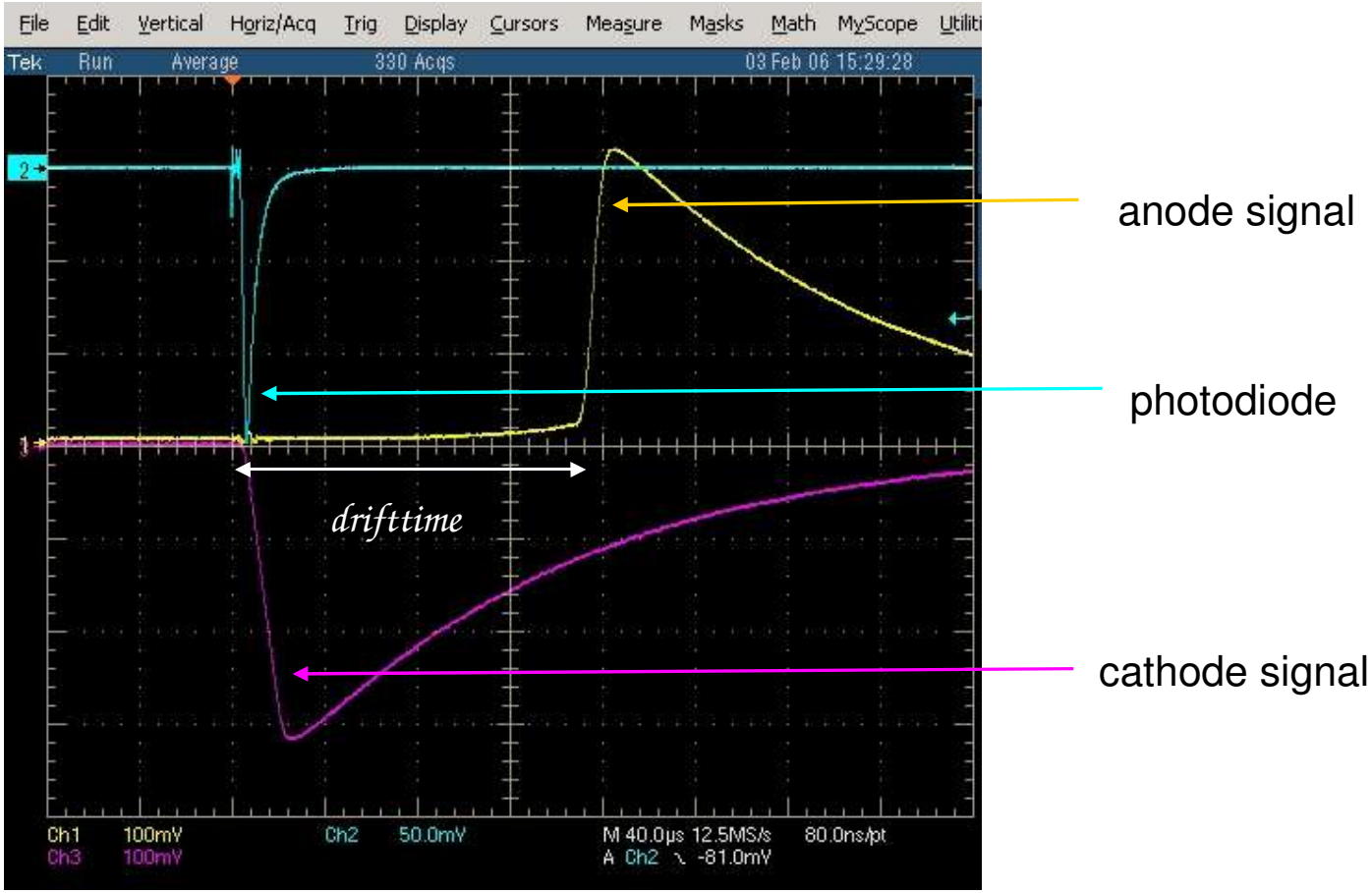

t_{drift}= 150 µs, $Q_{anode}/Q_{cathode}$= ~1

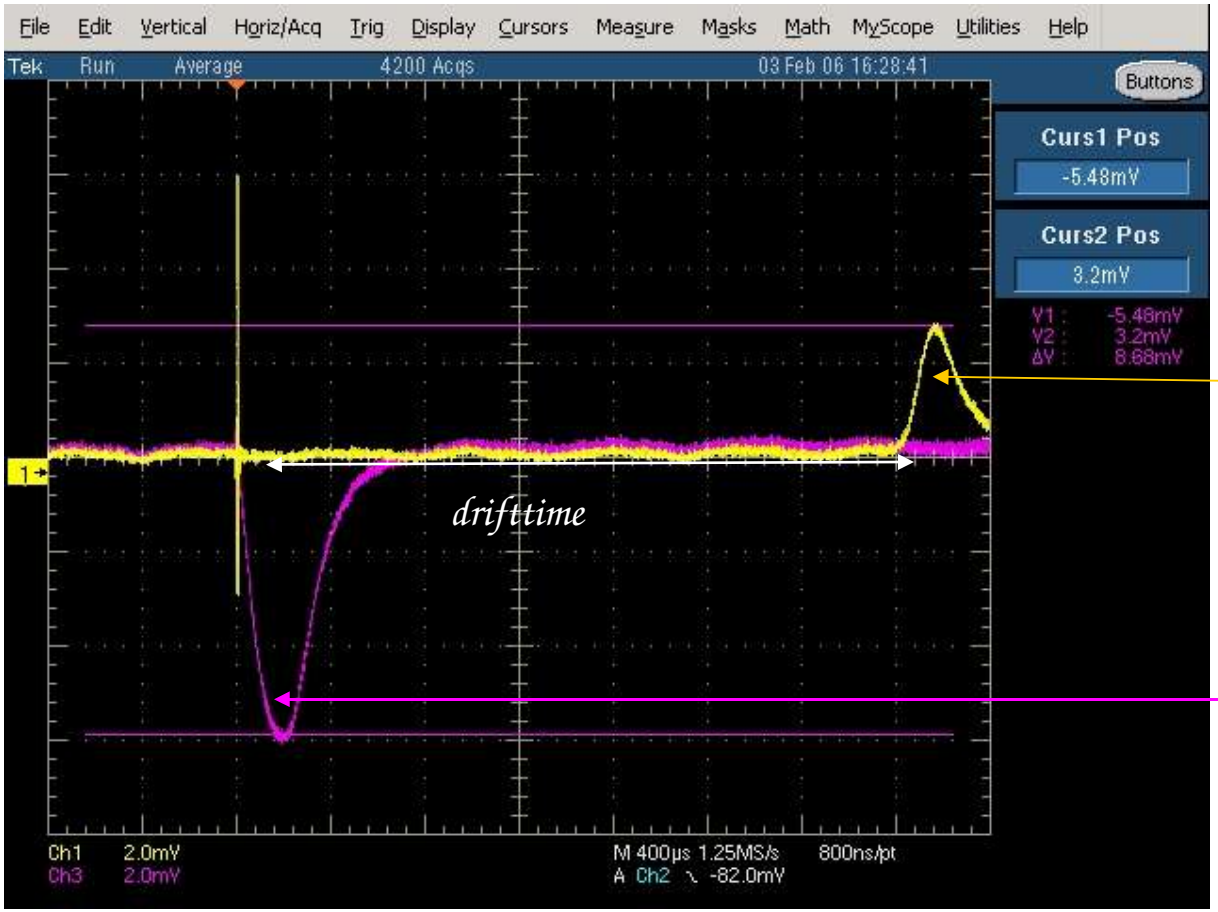

anode signal

cathode signal

a 2.8 millisecond drift, $Q_{anode}/Q_{cathode} \sim 0.4$ (*)

(*) peaks need some correction for cathode signal rise-time

Argon purity studies

now with appropriate decay-time electronics

PAB Argon Purity Development Station - Phase 2 Schematic (T. Tope)

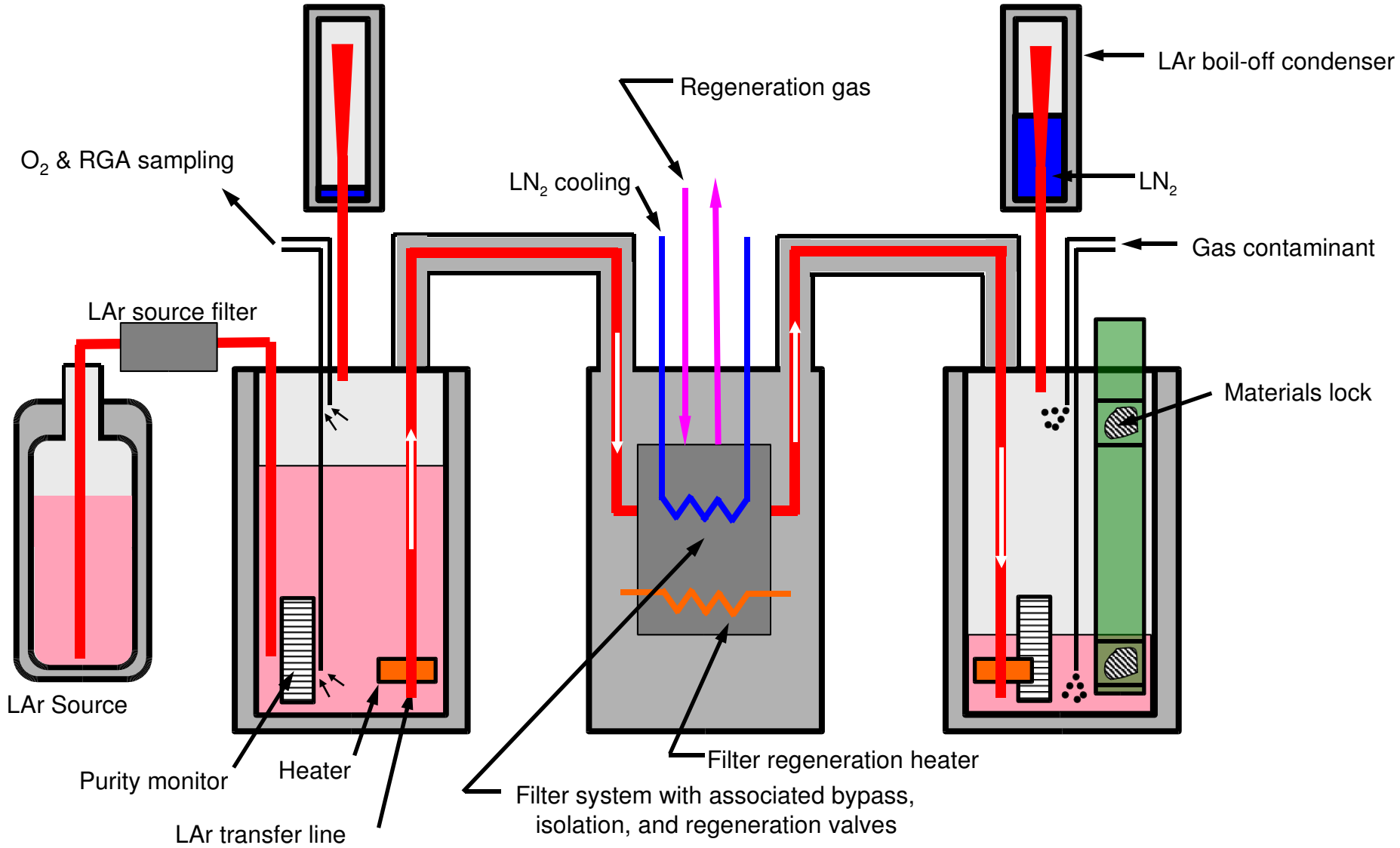

long wire studies - just starting

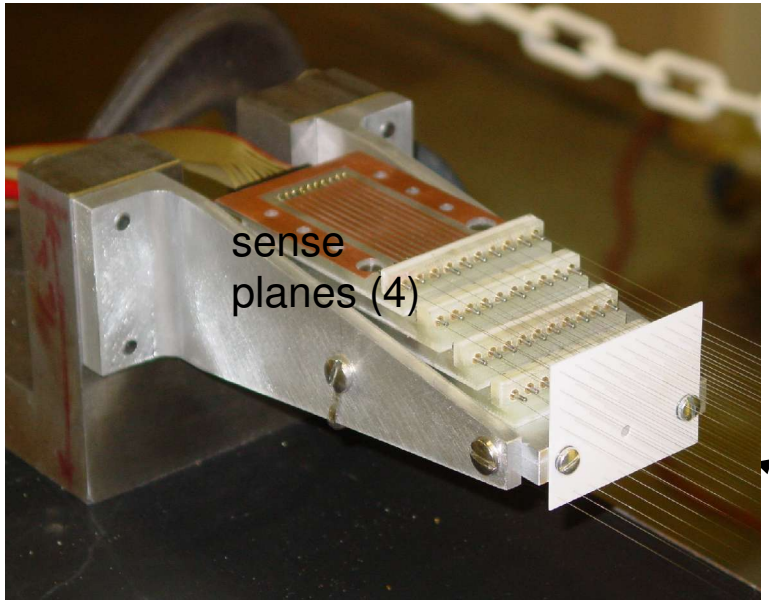

near end

We have setup to learn, check on, remind ourselves of the electrical implications of long wires - resistances, stability under HV, cross talk.

The wires are ~18 meters long arranged in 4 `signal' planes (10 wires/plane, 5mm spacing) and 1 `HV' plane

18 m

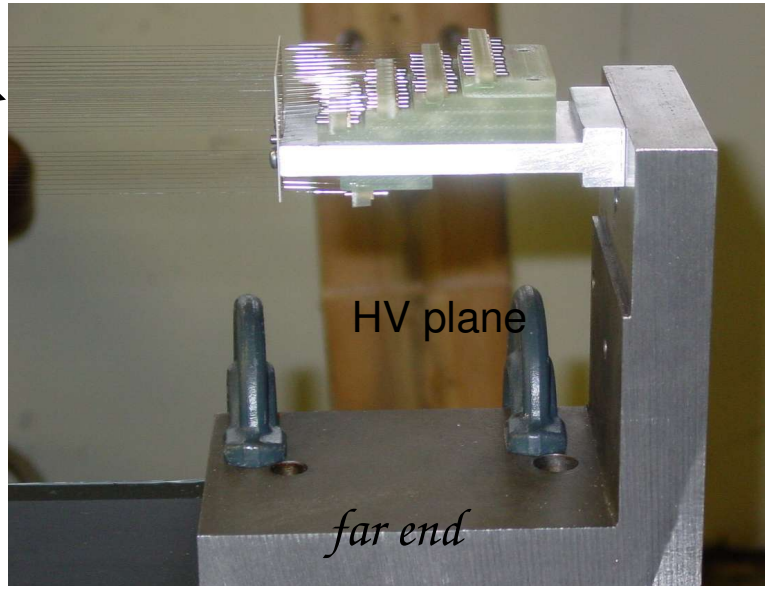

far end

the wires are held by a tapered pin in a tapered hole and position by a ceramic plate with precision holes

long wire studies - just starting

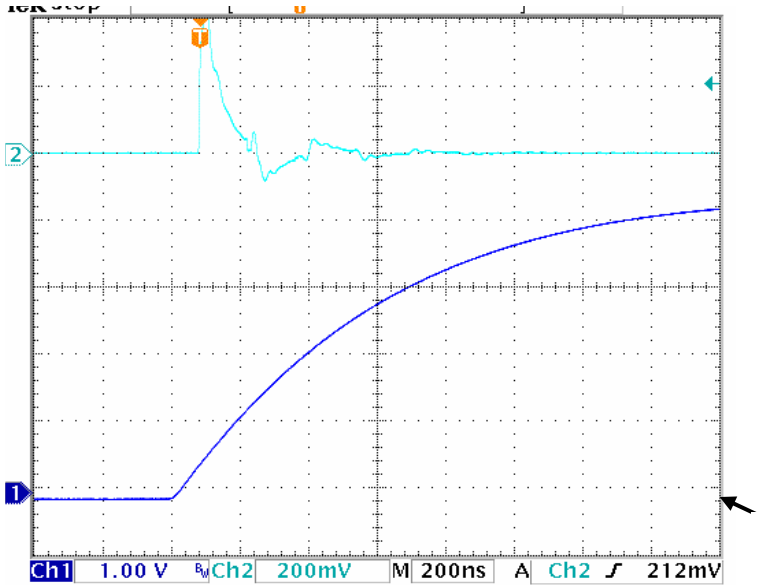

near end

will measure position-along-wire effects, cross talk and HV stability

18 m

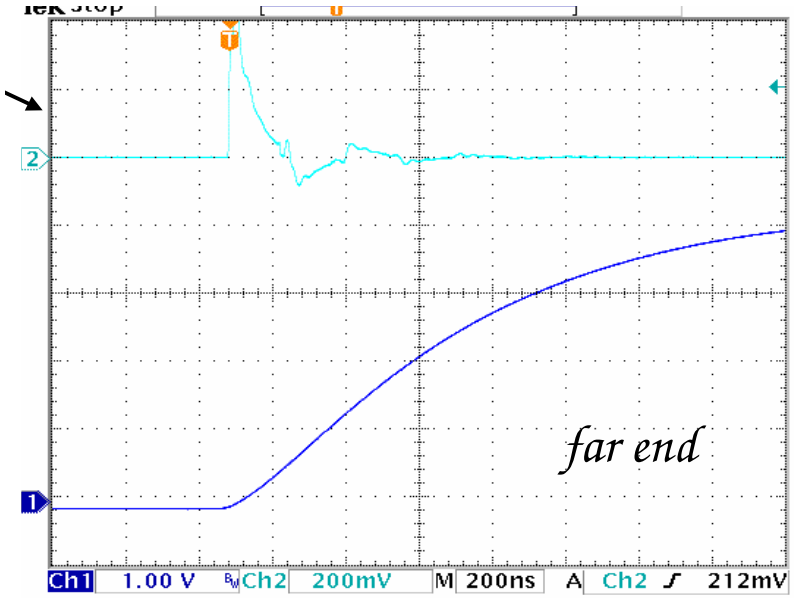

far end

response from near (left) and far (below) to pulsing; far is later and has slower rise

Mechanical Design of Tank - 50 kton for cost development

Important strategy choice - how to treat wires

Abandon individual weights (very complicated)

Assume wires ***fixed*** *to bottom and top of argon tank..*

What takes the load of the wires? will the wires survive cool-down?

The dome of the outer tank may be an attractive possibility

Mechanical Design Study

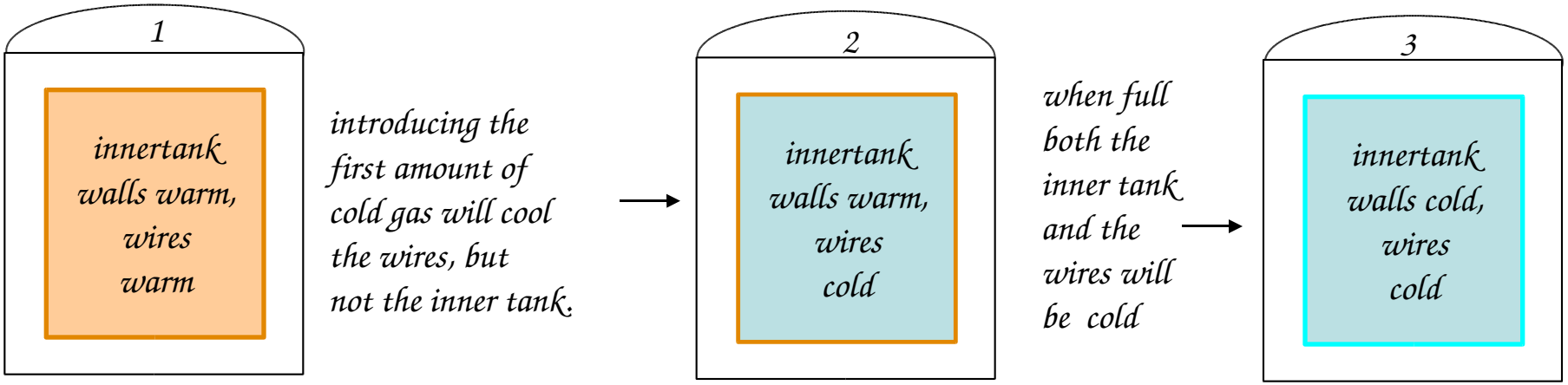

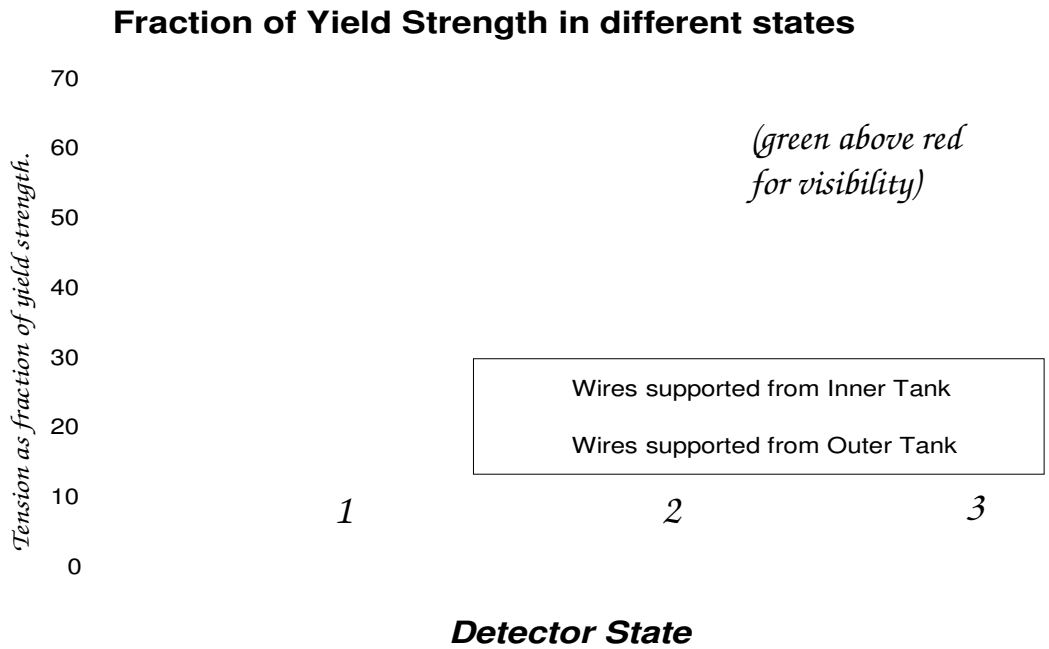

operating tension ~ 0.5 kg on 100 micron wire: gives ~0.4 mm max. shift

50kT parametric I-DEAS 11 model

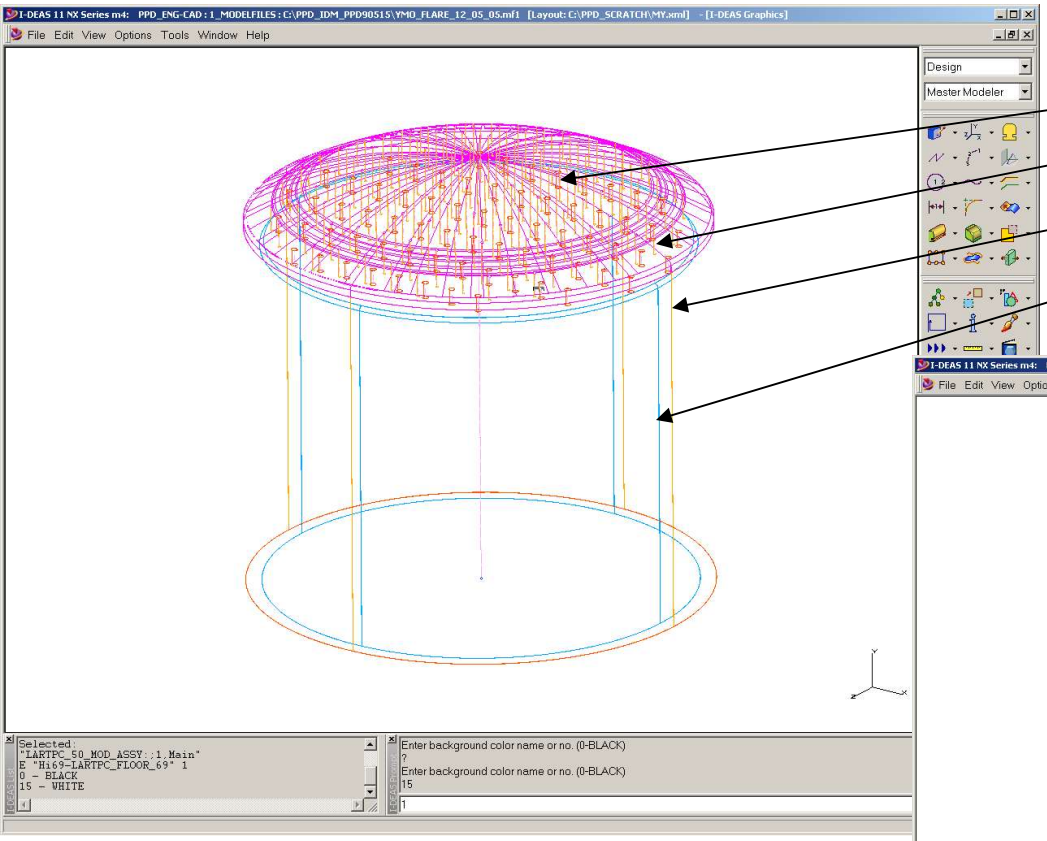

Dome with support tubes

Warm tank deck (with Chimney)

Warm tank (yellow)

Cold tank (blue)

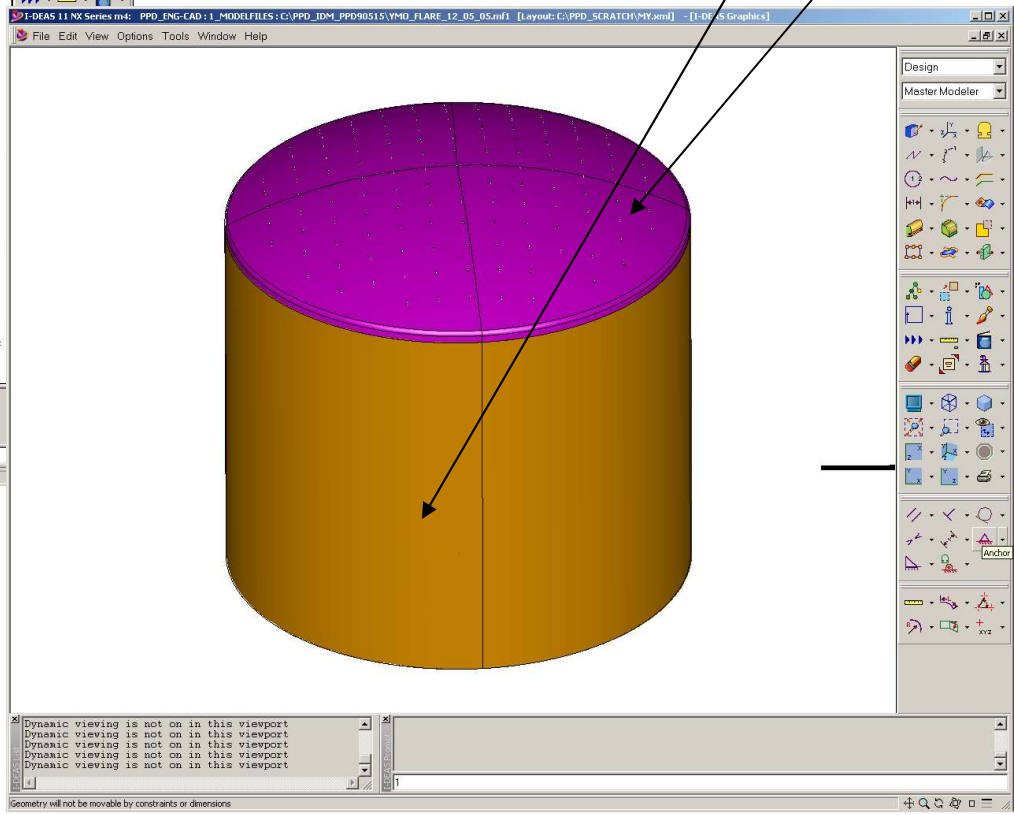

Wires attached to top of inner tank
with fixed attachments
(no weights or springs)

50KT. DOME

input tank parameters into excel spreadsheet -> IDEAS mechanical package

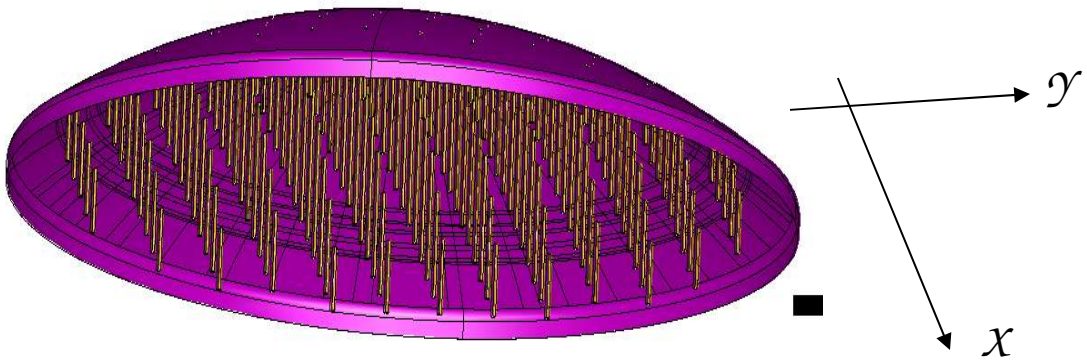

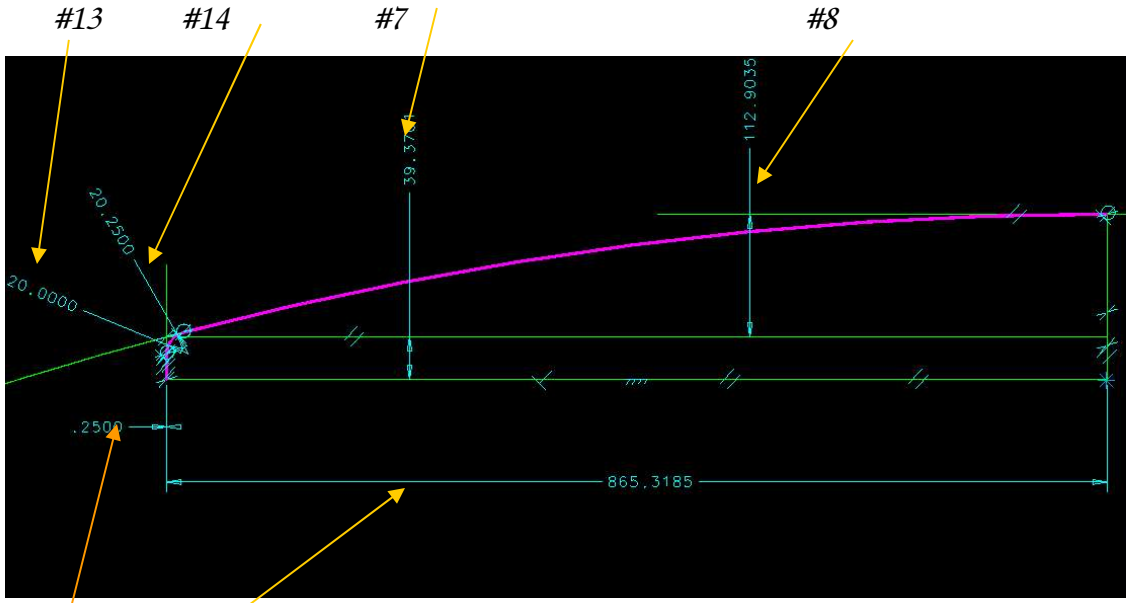

Microsoft Excel

File Edit View Insert Format Tools Data Window Help

C22 ='Tank,scalable_Hans&Youri'!K56

LARTPC_V2.xls

	A	B	C	D
1				
2	Name	Expression	Results	Unit
3	Part Name	LARTPC_DOME		
4	Part Number			
5	CILINDER_DOM_THICKNESS		0.25	inch
6	CILINDER_DOM_INNER_RAD		865.319	inch
7	CILINDER_DOM_HEIGHT		39.3701	inch
8	SHELL_DOM_HEIGHT		112.903	inch
9	SHELL_DOM_THICKNESS		0.25	inch
10	RevolveAngle		360	deg
11	DeltaRadius		0	inch
12	AxialTrans		0	inch
13	INNER_FILLET		20	inch
14	OUTER_FILLET		20.25	inch
15	CONNECT_SUPP_TUBE_X_SPACE		118.11	inch
16	AlongVecDist		265.178	inch
17	AgainstVecDist		0	inch
18	TwistAngle		0	deg
19	Draft1		0	deg
20	CONNECT_SUPP_TUBE_OUT_DIA		10	inch
21	CONNECT_SUPP_TUBE_INNER_DIA		9.5	inch
22	CONNECT_SUPP_TUBE_Y_SPACE		118.11	inch
23				

scheme for connection between inner and outer tank

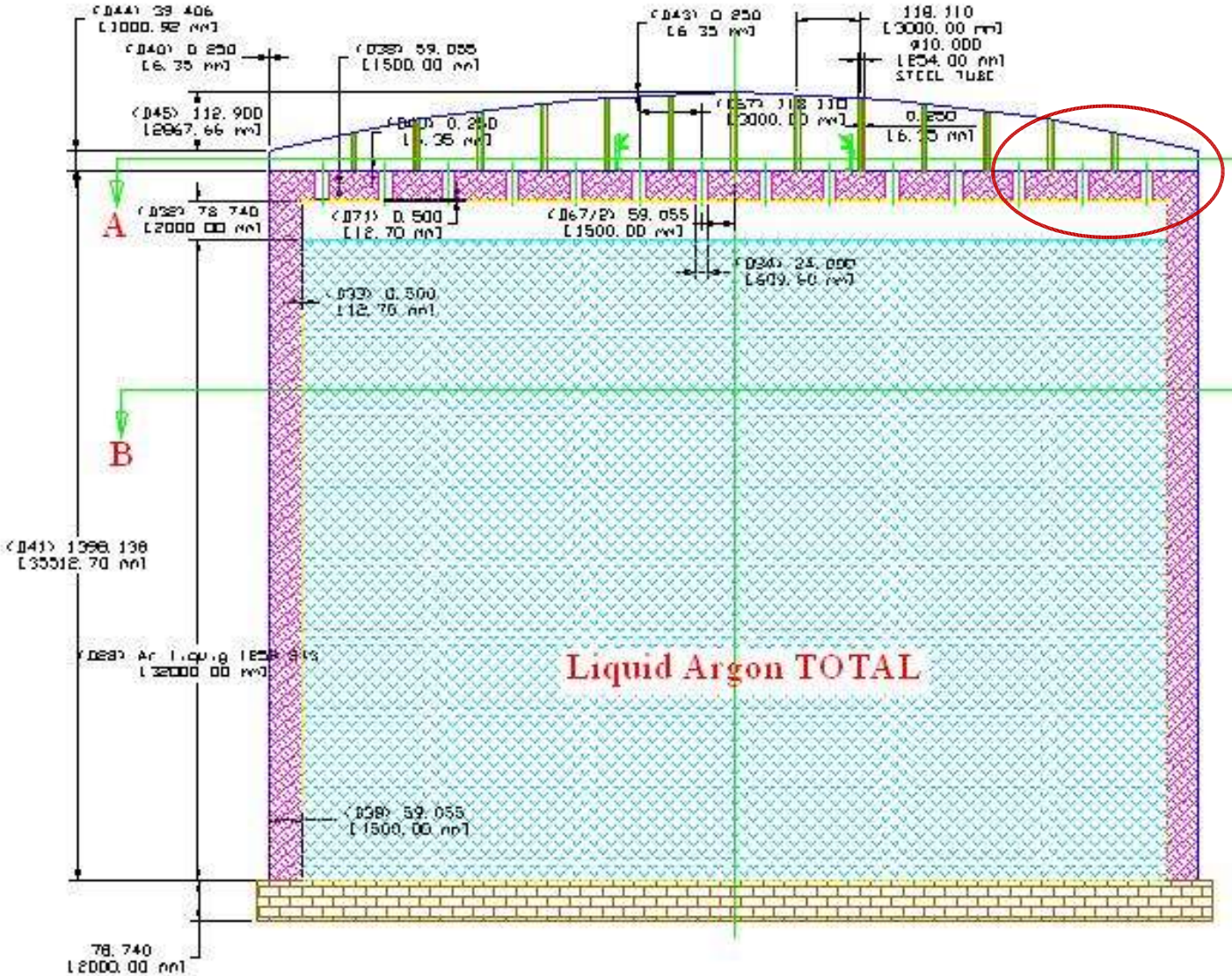

pipes connecting inner tank top to dome

LArTPC 50kT. WIRE LAYOUT (proposal)

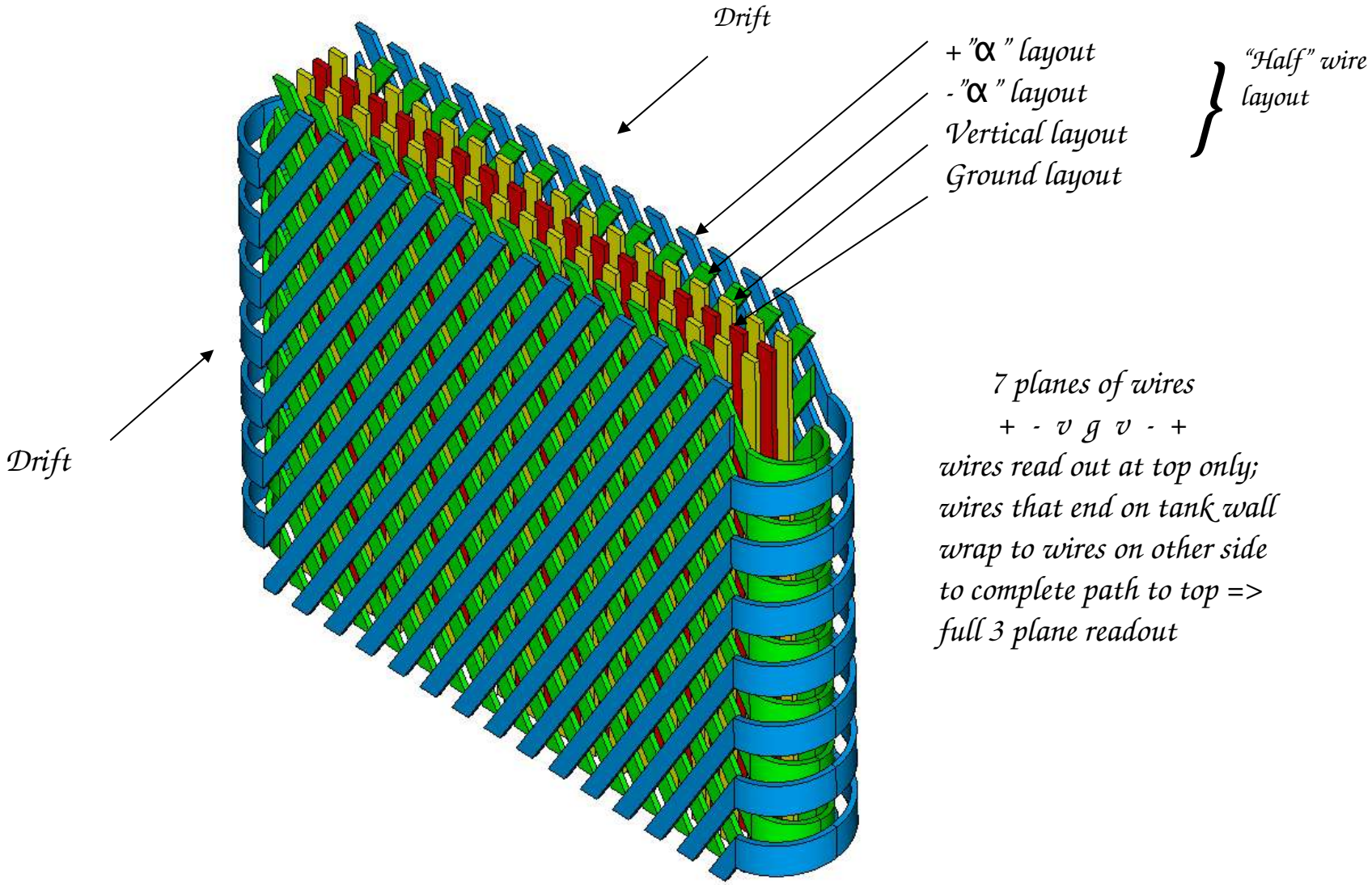

7 planes of wires

+ - v g v - +

wires read out at top only;
wires that end on tank wall
wrap to wires on other side
to complete path to top =>
full 3 plane readout

From the virtual & large to the actual and modest..

Device to check elastic limit of SS wire. The wire is put under tension, clamped by the two tapered pins and dipped into liquid nitrogen. The length is measured before and after immersion at the original tension to see if the wire has been stressed beyond the elastic limit.
In practice, the wire breaks almost at its elastic limit

Integrated System Test

Long drift to 3 readout planes system test...

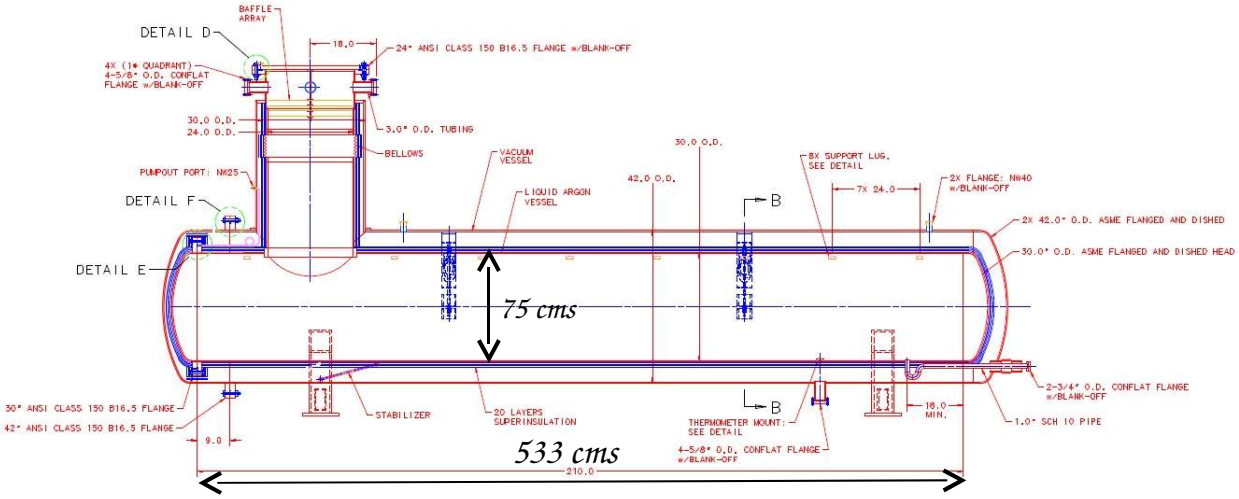

Drift distance > 5 meters, clear region 30 cms diameter

An essential (and challenging) experience for people outside ICARUS to build an integrated system, facing and resolving the issues of purification for long drift, HV and signal readout.
Complementary to the Pisa/UCLA system - uses different approaches to mechanical construction, HV distribution and details of purification.

Electronics for small setups - D. Edmunds MSU

LArTPC DAQ PMB Card

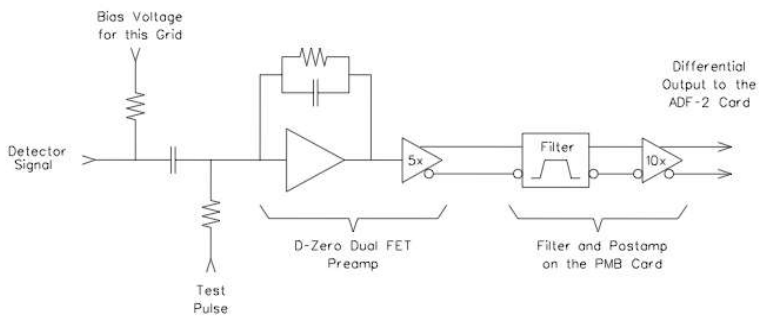

PMB Preamp Motherboard

Bias Voltage Distribution Resistor 10 Meg Ohm
Input Coupling Capacitor 4.7 nFd
Test Pulse Resistor 20 Meg Ohm
Preamp FB Capacitor 2 pFd
Preamp FB Resistor 20 Meg Ohm
Preamp Differential Output 5.0 mV / femto-Coulmb
Filter constants 0.75 usec and 30 usec

32 Channels as above per PMB Card
2 or 4 Test Pulse Nets per PMB Card
2 sets of Output Connectors:
Drive every channel on the ADF-2 Card
---> 2048 Circular Buffer per Channel
Drive every other channel on the ADF-2
---> 4096 Circular Buffer per Channel

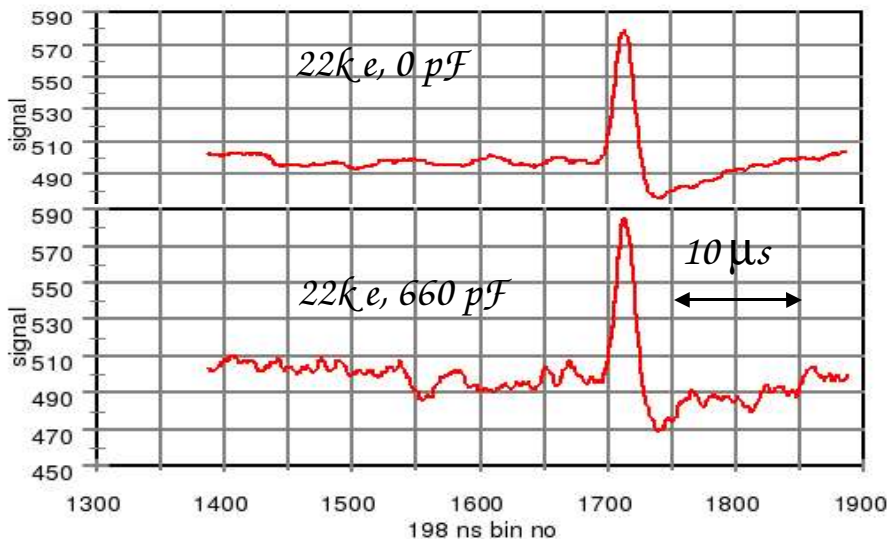

LArTPC Test Cryostat DAQ System

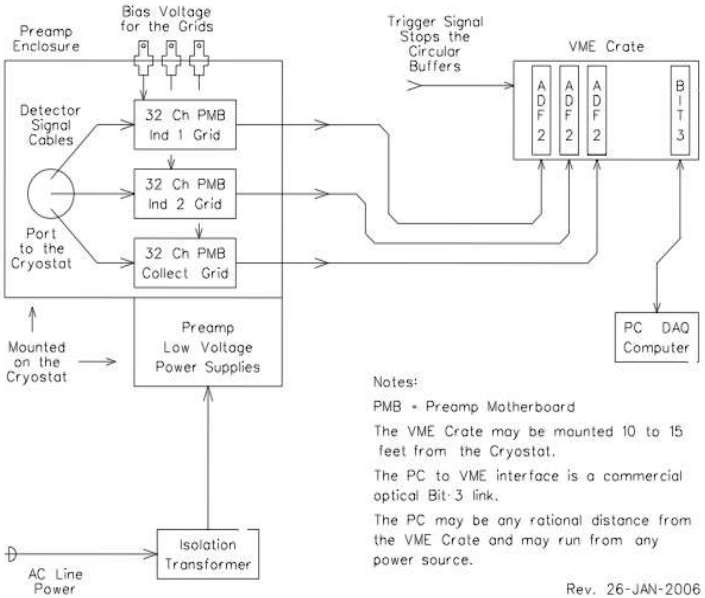

Notes:
PMB = Preamp Motherboard
The VME Crate may be mounted 10 to 15 feet from the Cryostat.
The PC to VME interface is a commercial optical Bit-3 link.
The PC may be any rational distance from the VME Crate and may run from any power source.

Rev. 26-JAN-2006

use DZero Run II dual-fet preamp & DZero buffer memory - appropriate for small chamber and long drift system test

Test of purging a volume from atmosphere: (R. Schmitt)

insert Argon gas at bottom of tank over large area at low velocity;

the Argon being heavier than air will act as a piston and drive the air out of the tank at the top;

fewer volume changes than simple mixing model will achieve a given reduction in oxygen concentration.

tank volume = 157 cf
tank cross section = 19 sf
flow rate ~ 73.2 cf/h
climb rate ~ 3.8 f/h

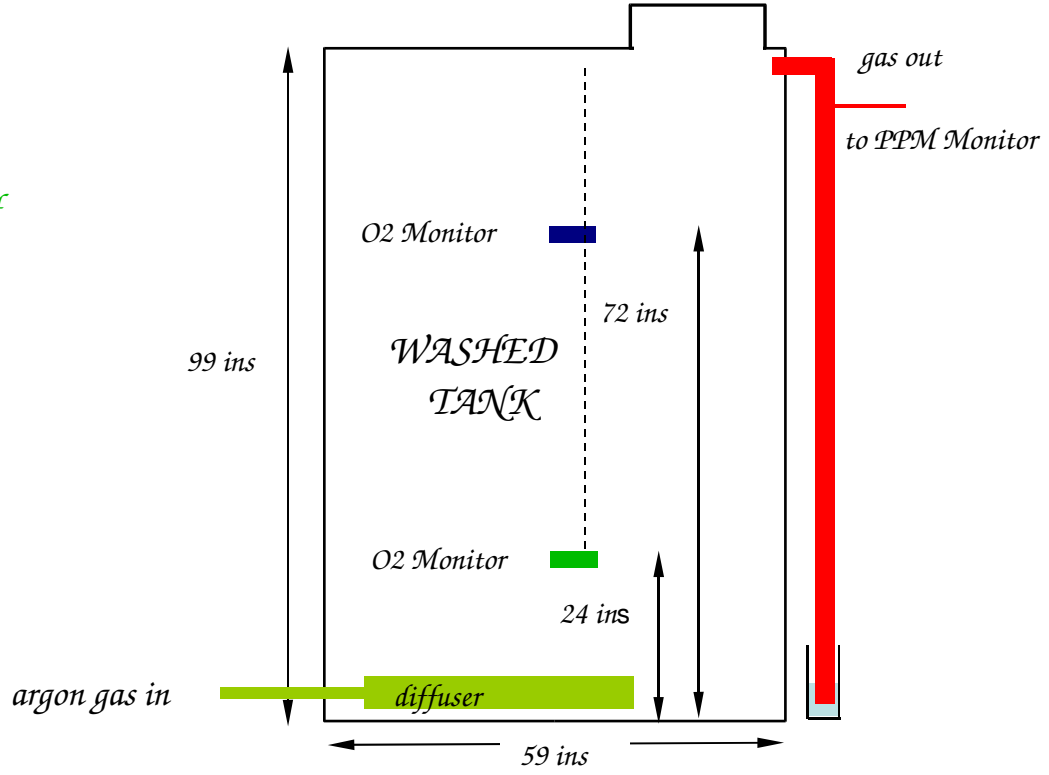

Test of purging a volume from atmosphere:

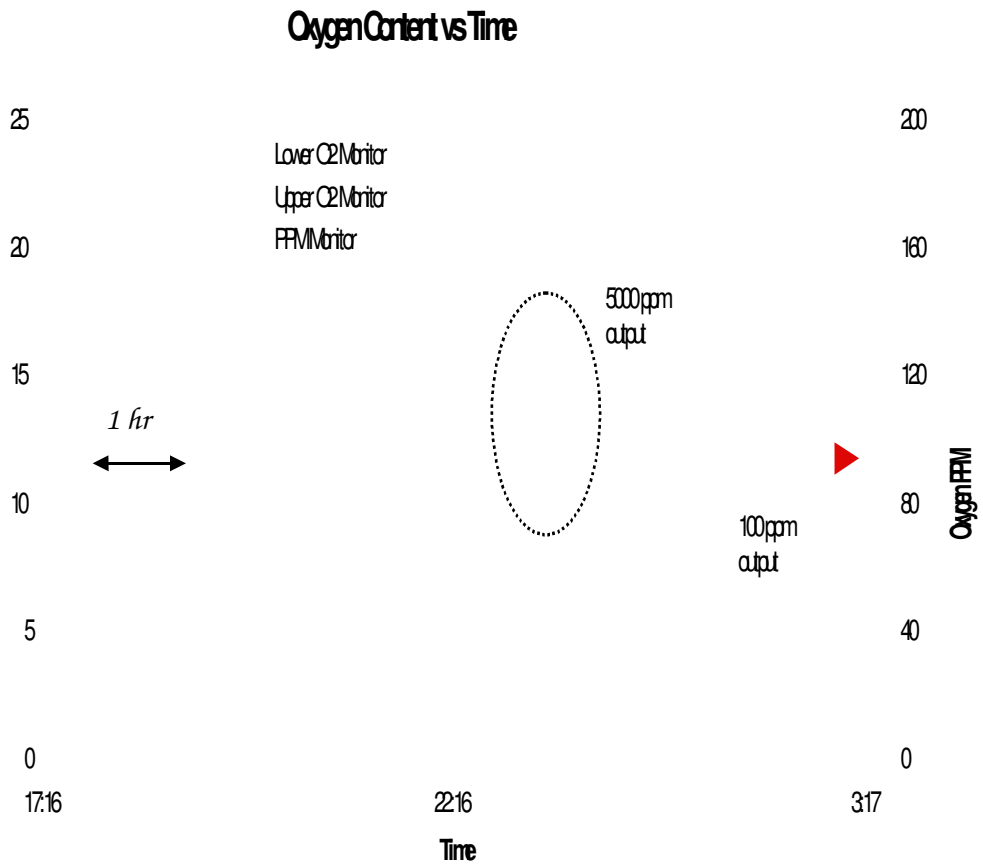

to 100 ppm O_2 (reduction of 2,000) takes 6 hrs = 2.6 volume changes
(cf simple mixing, which predicts ln(2000) = 7.6 volume changes)

Tests of Purging on Larger Tank

Village Tank Inspection – 4/11/06

- Tank Dwellers

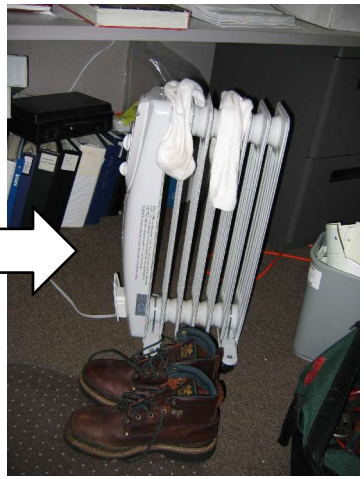

Village Tank Inspection – 4/11/06

- The walls are in good condition, with a few small rusty spots.
- A little of the dried silt on the wall can be rubbed off by hand, but it will take a brush and detergent to get most of it.

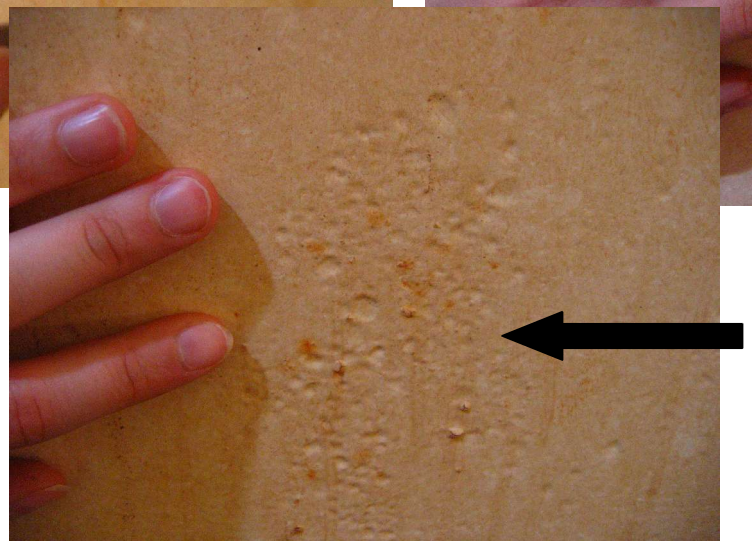

Surface pitting painted over

Village Tank Inspection – 4/11/06

- The roof is framed and apparently has lapped plates.

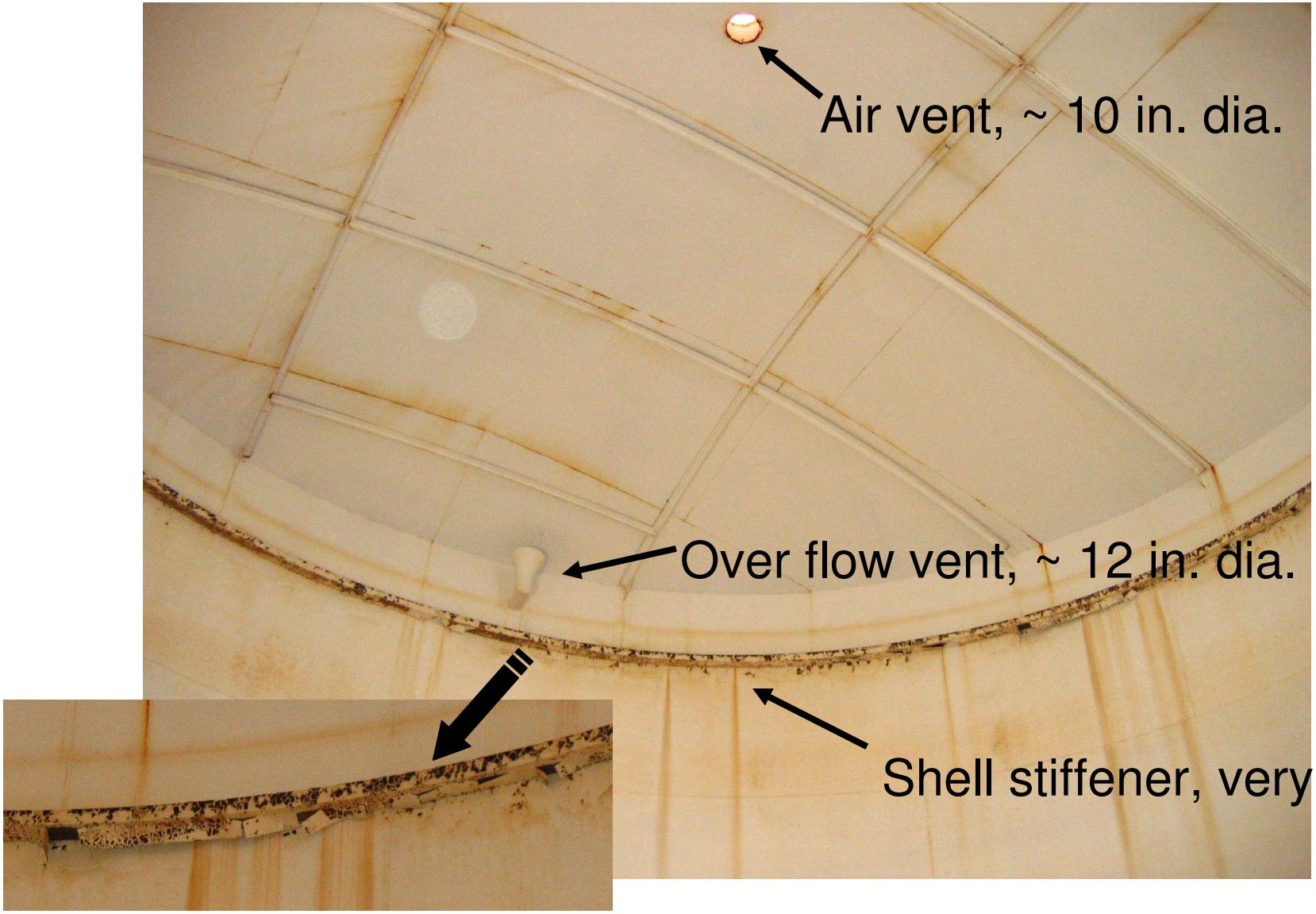

Liquid Argon Time Projection Chambers

Ongoing R&D work at Yale

Supported by DOE/ADR

Yale, Fermilab, Michigan State, Princeton, Tufts, UCLA, York (Canada)

With Special Thanks to ICARUS

Steps towards seeing tracks

- Purity
  - Filters
  - Purity Monitor
  - Long electron lifetime
- Wire Chamber
  - Tests of 500l vessel
  - Assembly & Electronics
- PMT
  - Event tagging and background rejection

LAr Filtration

- ICARUS used proprietary Oxisorb filter
  - Needs to be regenerated at factory (Messer GmbH)
- We use Trigon filter
  - Small oxygen absorbent granules
  - Can regenerate by flowing 95% Ar, 5% H mixture while baking filter
- Also use molecular sieve
  - Used to remove water

500l Vessel for TPC

- Currently cold testing outer bath with inner vessel under vacuum (5e-5 mbar) and inner vessel liquid fill
- Building out feedthroughs
  - HV and signal
  - Level meter
  - Fill lines
- Slow control
- TPC

Conclusions

- The infrastructure needed to build prototype Liquid Argon TPC's and to examine issues associated with constructing large (10's of ktons) LArTPC's now exists at some non-trivial level in the U.S.
- There is movement toward forming an international collaboration.

Backup slides

Belljar setup for testing Purity Monitor systems in gas

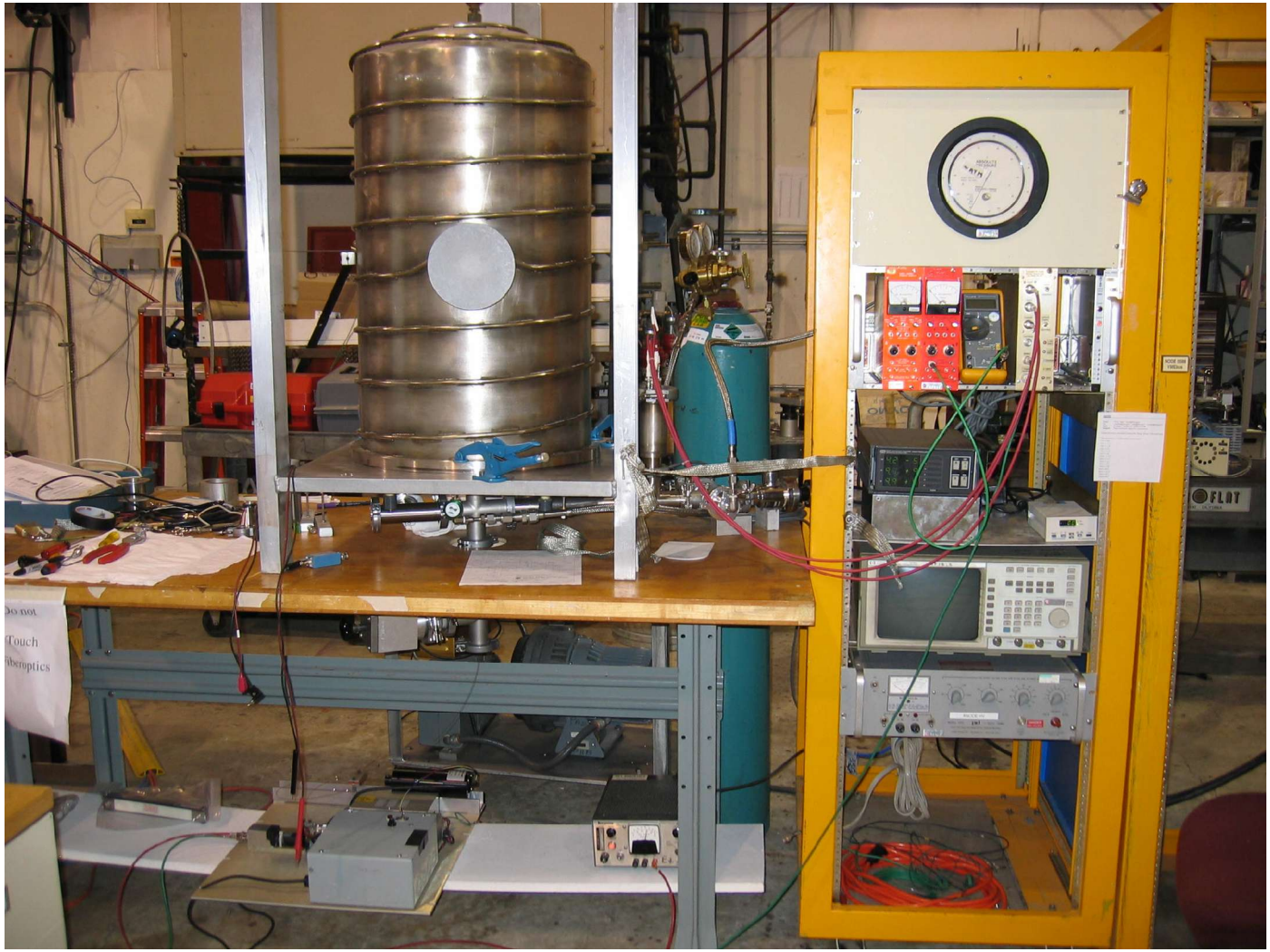

used for evaluating photo-cathodes, wiring schemes, HV connectors, light-pulsers

PAB Argon Purity Development Station Features

- Closed system after initial LAr charge
  - LN_2 heat exchangers condense LAr boiloff
  - Heaters create pressure to move LAr back and forth thru filter
  - Isolation valves allow individual cryostat separation
  - Filters can be regenerated in place, bypassed, and isolated
- Stainless Steel Construction
  - Top flange with double o-ring groove and seal monitoring port
  - All metal seals except for relief valve o-ring which is purged with GAr
  - System evacuated to 10^{-6} Torr with dry turbo before filling (no baking)
- Purity instrumentation
  - Purity monitor(s) in each cryostat
  - Capillary tubing for gas and liquid sampling with O_2 (75 ppt LDL) and RGA analyzers
- Purity testing
  - Capillary tubing introduces gas contamination into both liquid and vapor
    - N_2 and H_2O are of particular interest
  - Material lock places solid contamination into both liquid and vapor
    - Qualify materials for large tank construction
    - Material lock will be purged not evacuated once material is inserted

The Hans Jostlein Two-Bellows Liquid Argon Pump

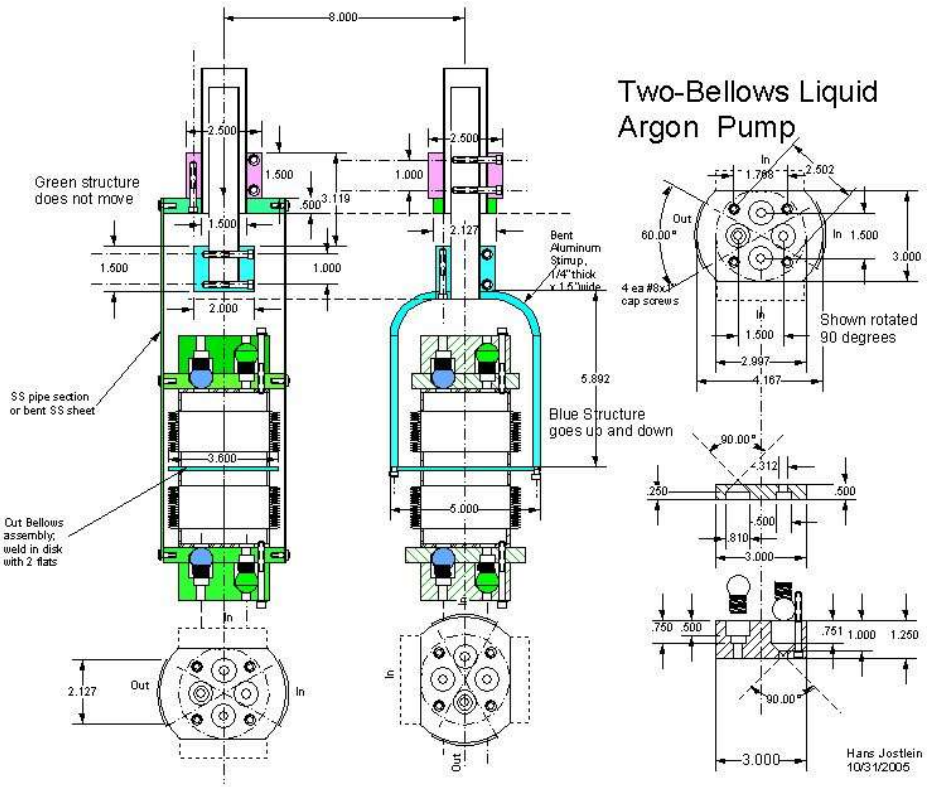

in action

Village Tank Inspection – 4/11/06

- Most of the tank water was pumped out by FESS prior to arrival.
- Rich Schmitt and Terry Tope entered the tank, following a confined space procedure. Outside the tank were Dave Pushka, John Voirin, Eric McHugh.
- Portable halogen lights with GFI plus sunlight illuminated the tank.

Village Tank Inspection - 4/11/06
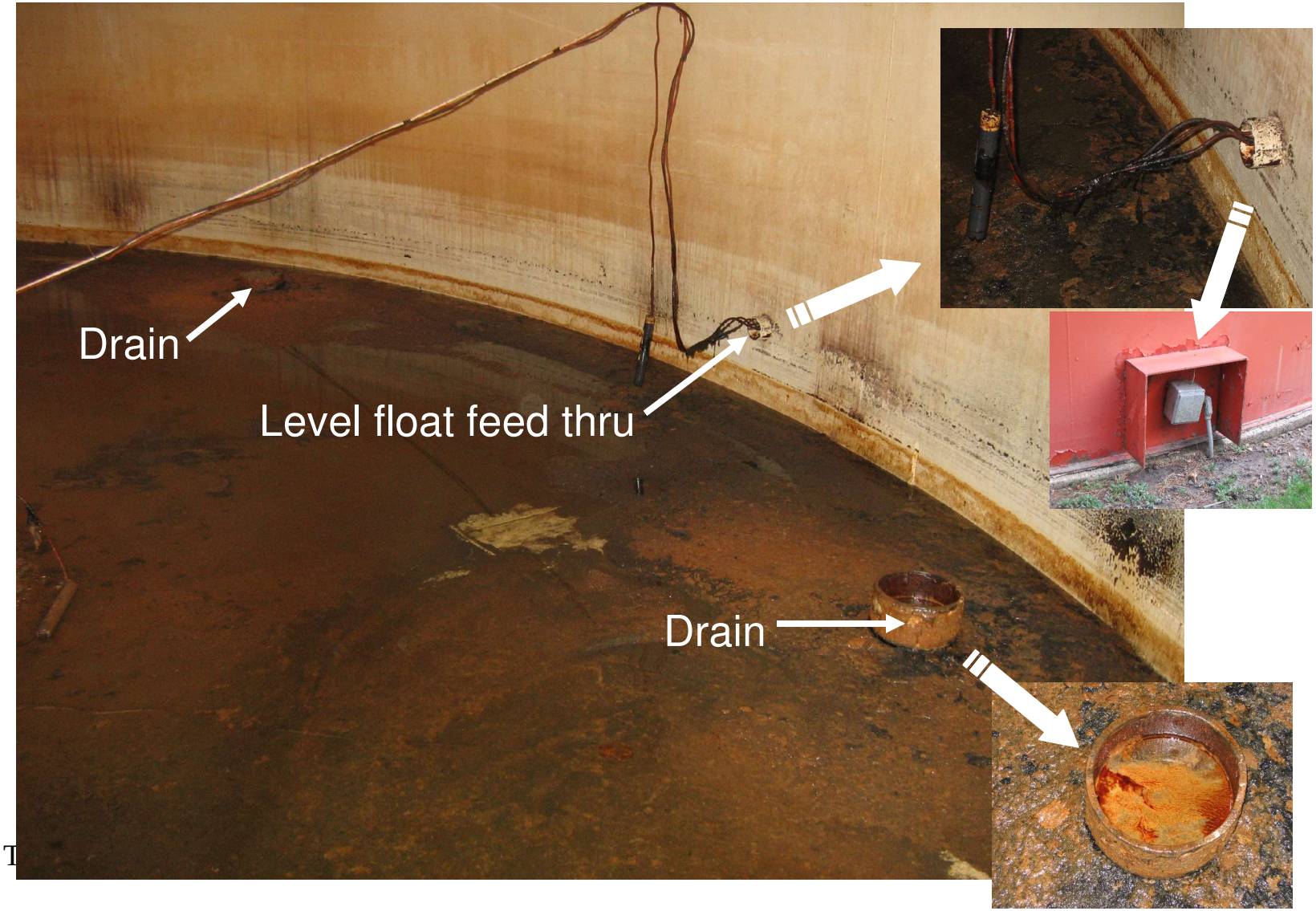
- There are two eight inch pipe floor drains.