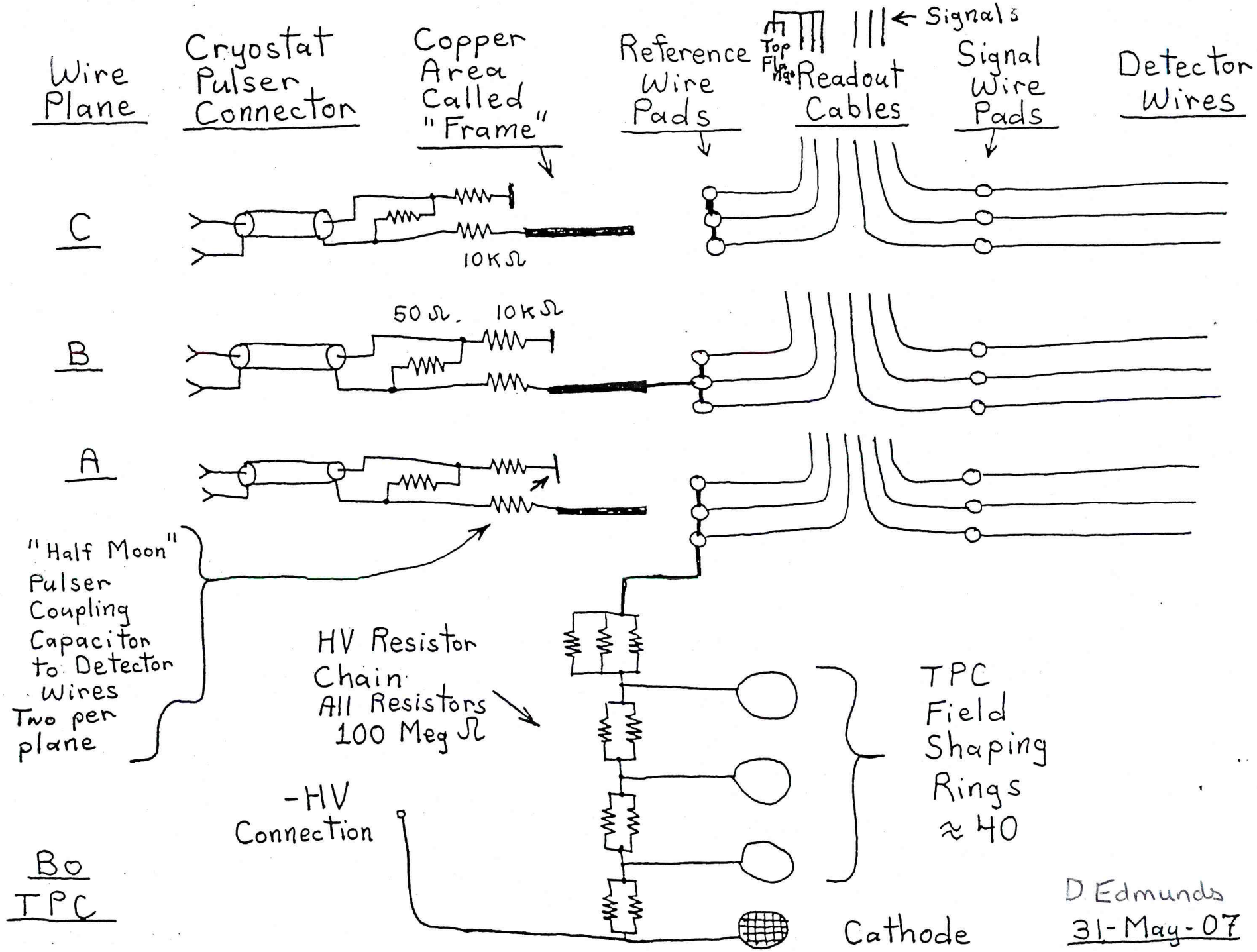
Wire Plane
Cryostat Pulser Connector
Copper Area Called "Frame"
Reference Wire Pads
Top Flange
Readout Cables
Signals
Signal Wire Pads
Detector Wires
C
B
A
10KΩ
50Ω
10KΩ
"Half Moon" Pulser Coupling Capacitor to Detector Wires Two per plane
HV Resistor Chain All Resistors 100 Meg Ω
-HV Connection
TPC Field Shaping Rings ≈ 40
Cathode
Bo TPC
D Edmunds
31-May-07