**1.0 - FLARE Materials Test Station Cryogenic Safety Report**

1.1 System Description

1.2 Flow Schematic

1.3 Instrument and Valve Summary

1.4 System Control Loops, Interlocks, and Electrical Schematics

2.1a Procedure for Filling “Luke”

2.1b Procedure for Emptying “Luke”

2.1c Procedure for Operating “Air Lock” During Material Insertion

2.1d Procedure for Operating “Air Lock” During Material Removal

2.1e Procedure for Filling the LN2 dewar

2.1f Normal Nitrogen Circuit Valve Positions During Operation

2.1g Procedure for Connecting Stockroom Liquid Argon Dewars to the System

2.1h Procedure for Removing Stockroom Liquid Argon Dewars from the System

2.1i Procedure for Molecular Sieve Regeneration

2.1j Procedure for O2 Filter Regeneration

2.2 Startup Check List for Filling the Material Test Station

2.3 Training List for Operators of the FLARE Material Test Station

3.1 FMEA

3.2 WHAT-IF WORKSHEET

3.5a1 ODH Analysis of the Proton Assembly Building for the FLARE Materials Test Station

3.5a2 ODH Fan Manufacturer Info

3.5b1 Pressure Vessel Engineering Note for “Luke” Including Relief Valve Certification and U-1A Manufacturers Data Report for Pressure Vessels

3.5b2 Updated Pressure Vessel Engineering Note for PAB (Formally PS1) Liquid Nitrogen Dewar Including Relief Valve Certifications.

3.5b3 Old Pressure Vessel Engineering Note for PS1 Liquid Nitrogen Dewar

3.5b4 Vacuum Vessel Engineering Note for PS1 Liquid Nitrogen Dewar

3.5c PAB LN2 Dewar Compliance with Fermilab ES&H 5032.1TA

3.5d LN2 Dewar Fill Line Pressure Test Documentation

3.5e LN2 Transfer Line Pressure Test Documentation

3.5f LAr Transfer Line Pressure Test Documentation

3.5g “Luke” Materials Lock Bellows and Gate Valve Pressure Test

3.5h LN2 Dewar Piping Pressure Test

4.1a Relief Valve Sizing for the FLARE Materials Test Station Cryostat and Supporting Documentation

4.1aa Supporting Documentation for Relief Valve Calculations

4.1b Relief Valve Sizing for Piping Associated with the FLARE Materials Test Station Cryostat

4.1c Relief Valve Sizing for the PAB LN2 Dewar

4.2 Material Stress Levels

## 1.1 - System Description

The Liquid Argon TPC R&D effort at Fermilab has fabricated a materials test station at the Proton Assembly Building (PAB). Liquid argon time projection chambers (LArTPCs) are the future of long-baseline neutrino oscillation physics and present several engineering challenges.

When a high energy particle passes through a medium, the particle leaves a path of ionization electrons which can be detected, tagging the path of the incoming particle. In a LArTPC, the medium is liquid argon (LAr) and the paths of ionization electrons are detected by drifting the paths over meters to wire planes. These wire planes are oriented in such a way that the time, magnitude and position of each path can be reconstructed. Thus a data acquisition system records many snapshots of the relative appearance of ionization electrons each second [at ~40 MHz]. Put in sequence, physicists can reconstruct each particle's path, which results in gorgeous bubble-chamber-like images. From the topology and energy deposited along each track, specific interactions can be reconstructed.

The materials test station will help determine what materials can be used to construct a detector without polluting the argon. Purity is an issue because polar molecules and atoms without full outer electron shells (which every element has except for noble gases, which argon is) attract electrons. These particles - predominantly water and oxygen - will absorb the ionization electrons to make themselves happy, but at the expense of the evidence of a particle having passed through. Liquid argon calorimeters have been successfully operated at Fermilab with electro-negative contaminants at the level of $10^{-7}$. The liquid argon TPC requires electronegative contaminants to not exceed $10^{-11}$ or 10 parts per trillion.

To measure such contamination levels, a purity monitor is used. The purity monitor measures purity by firing a light pulse from a xenon lamp at a photocathode and then drifting the ejected electrons to the anode with an electric field. The number of electrons surviving the transit from the cathode to the anode gives a measure of the argon purity from those numbers.

Fermilab print 3942.510-ME-435365 documents the cryogenic system piping. The materials test station (Luke) is a 250 liter liquid argon ASME coded cryostat. The cryostat has several key features.

- An “air lock” for introducing materials into the liquid argon. Materials are placed into a basket above a gate valve. The space above the valve can either be evacuated or purged with argon to remove the atmospheric contaminants. This basket can then be lowered into cryostat and positioned in the argon vapor or the argon liquid to study the contamination effects of the test material.

- A vapor pump with oxygen and water removing filter material. The pump uses a heater to create vapor which pushes the liquid argon out the bottom of the filter housing. When the heater is turned off, a valve opens at the top of the filter which equalizes the filter and cryostat vapor spaces and allows liquid to flow back into the filter housing. All tubing used to construct the filter assembly is less than 6 inches in diameter such that no part of it is a pressure vessel.
- A condenser that uses liquid nitrogen to condense the liquid argon boil off vapor so that the system may remain closed. All tubing used to construct the condenser LAr and LN2 spaces is less than or equal to 6 inches in diameter such that it is not a pressure vessel. The argon vapor condensation rate is controlled by adjusting the level of liquid nitrogen in the condenser.
- All flanges use metal seals to prevent the diffusion of oxygen that occurs with o-rings. The only o-rings in the system are on relief valves and the large top flange. The down stream side of the relief valves are purged with argon to prevent oxygen diffusion. The space between the two concentric o-rings on the top flange is evacuated to prevent oxygen diffusion.
- The cryostat has ports that allow the introduction of contamination gas to study the effects of nitrogen, carbon dioxide, etc.
- An internal heater to build vapor pressure for quick control response.

Liquid argon is supplied by up to four FNAL stockroom high pressure dewars. These supply dewars have their reliefs set at 350 psig. The trapped volume reliefs on the liquid argon transfer line are set at 400 psig. Thus all components between the source dewars and the cryostat are rated for at least 400 psig.

The “P-bar Molecular Sieve Filtering Dewar” contains a molecular sieve intended to remove water from the liquid argon. The dewar is a vacuum jacketed ASME vessel originally used to store liquid helium with an internal MAWP of 35 psig. In this implementation it is just a convenient method to support and insulate a filter housing. Both the vacuum jacket and inner vessel are evacuated during operation. The liquid argon is contained in the piping and filter housing. The liquid does not reside in the inner vessel. In this system it is not considered a pressure vessel because it is relieved at atmospheric pressure. The molecular sieve is regenerated by isolating the filter housing and heating the filter material while vacuum pumping. With an internal volume of 160 liters, the dewar is too small to fall under the FESHM 5033 Vacuum Vessel Safety Guidelines.

The “P-bar Oxygen Filtering Dewar” contains an oxygen filter that removes oxygen by oxidation to a high surface area copper alumina catalyst. The dewar is a vacuum jacketed ASME vessel identical to the “P-bar Molecular Sieve Filtering Dewar.” Both the vacuum jacket and inner vessel are

evacuated during normal operation and the inner vessel shares a common vacuum with much of the liquid argon transfer line. The liquid argon is contained in the piping and filter housing. The liquid does not reside in the inner vessel. In this system it is not considered a pressure vessel because it is relieved at near atmospheric pressure. The oxygen filter is regenerated by heating the filter to 250 $^{o}$C and flowing a mixture of 5% hydrogen and 95% argon thru the filter while the filter is isolated from the rest of the system. The gas mix is considered flammable and the system was previously reviewed by Jim Priest.

A cryostat identical to Luke will be added to the system after the materials test station is commissioned. The cryostat will contain a small TPC chamber.

Liquid nitrogen is supplied to the condenser from an 1875 gallon liquid nitrogen tank located outside PAB. The liquid nitrogen flows thru a vacuum jacketed line into PAB where solenoid valves control the flow. A cool down valve bypasses the condenser so that warm vapor is not added to the condenser. All nitrogen gas vents outside PAB. The liquid nitrogen tank is equipped with a fill shut off valve to prevent overfilling of the tank by the tanker truck.

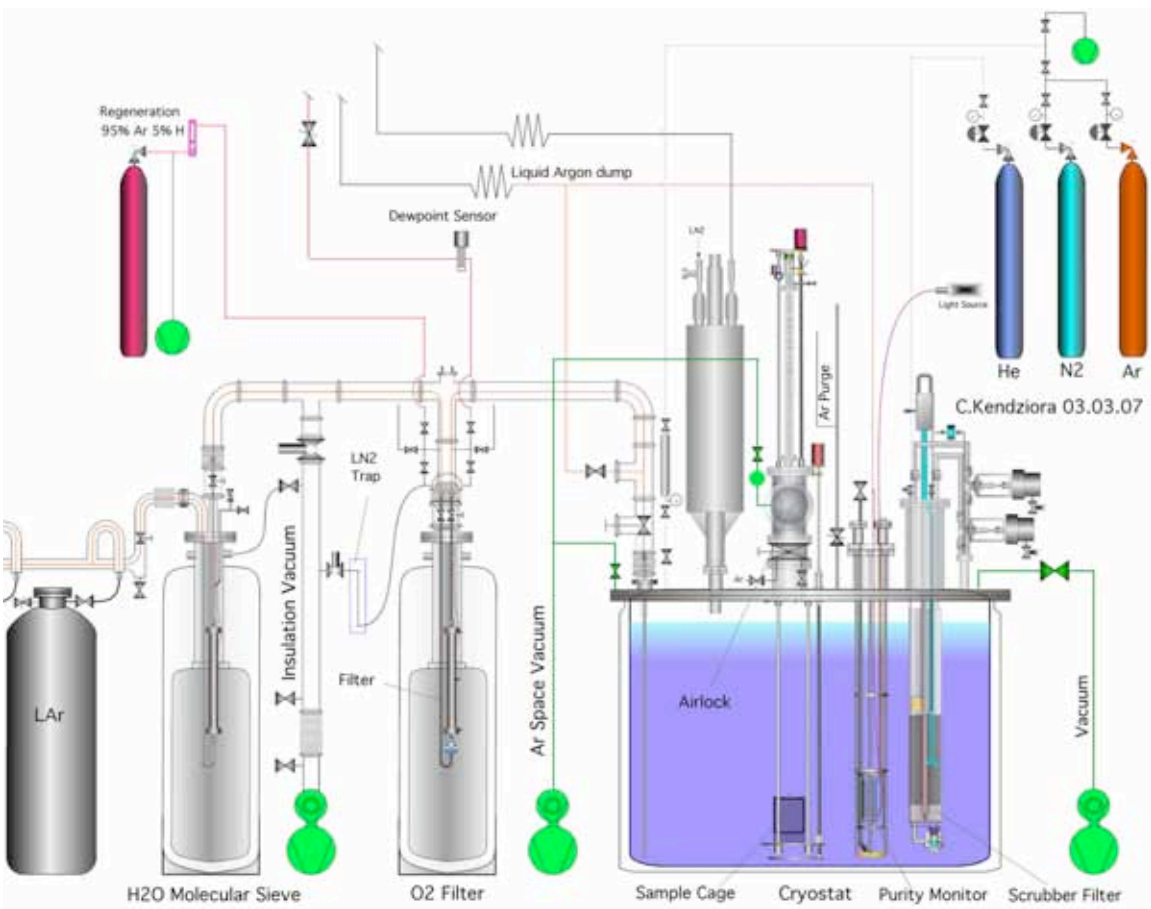


Figure 1.1.1: Drawing of the transfer line, filters, and cryostat.

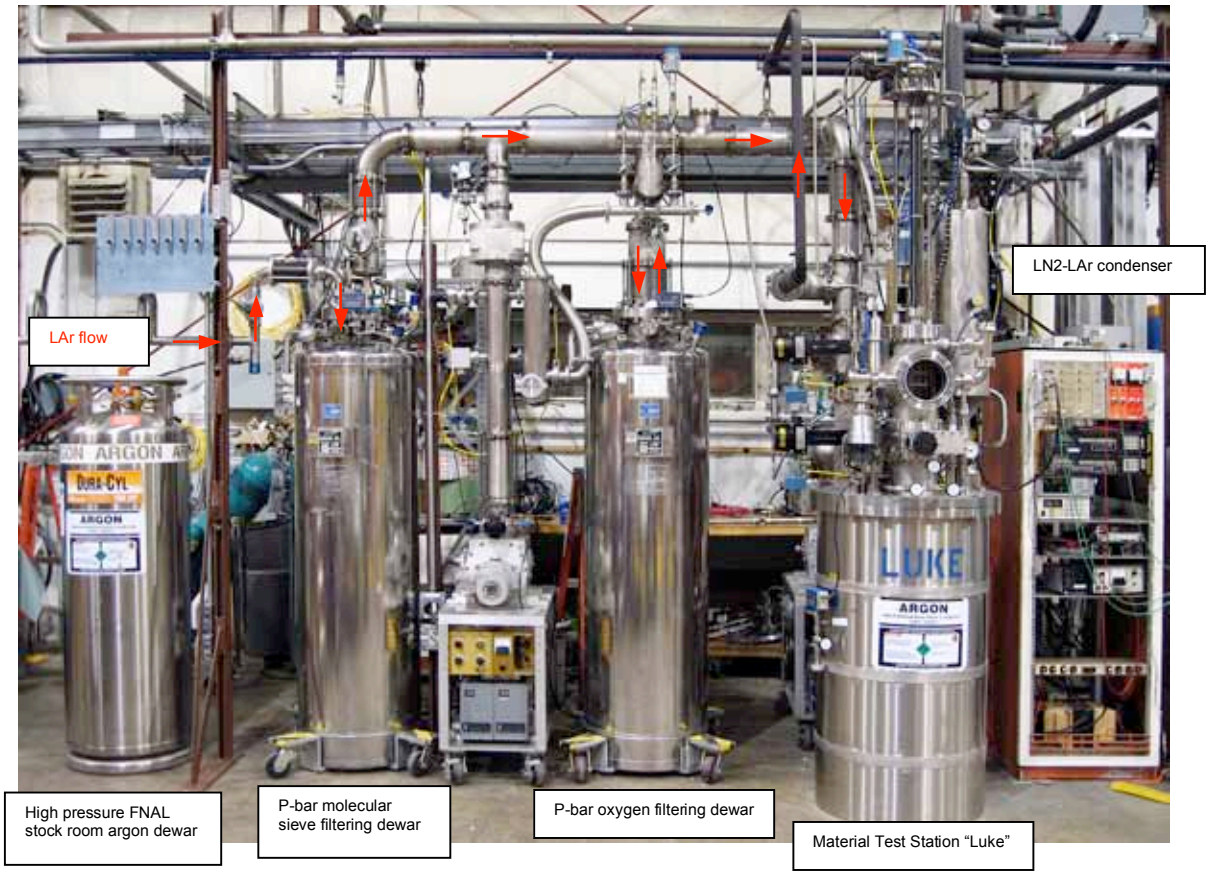


Figure 1.1.2: Photo of the transfer line, filters, and cryostat.

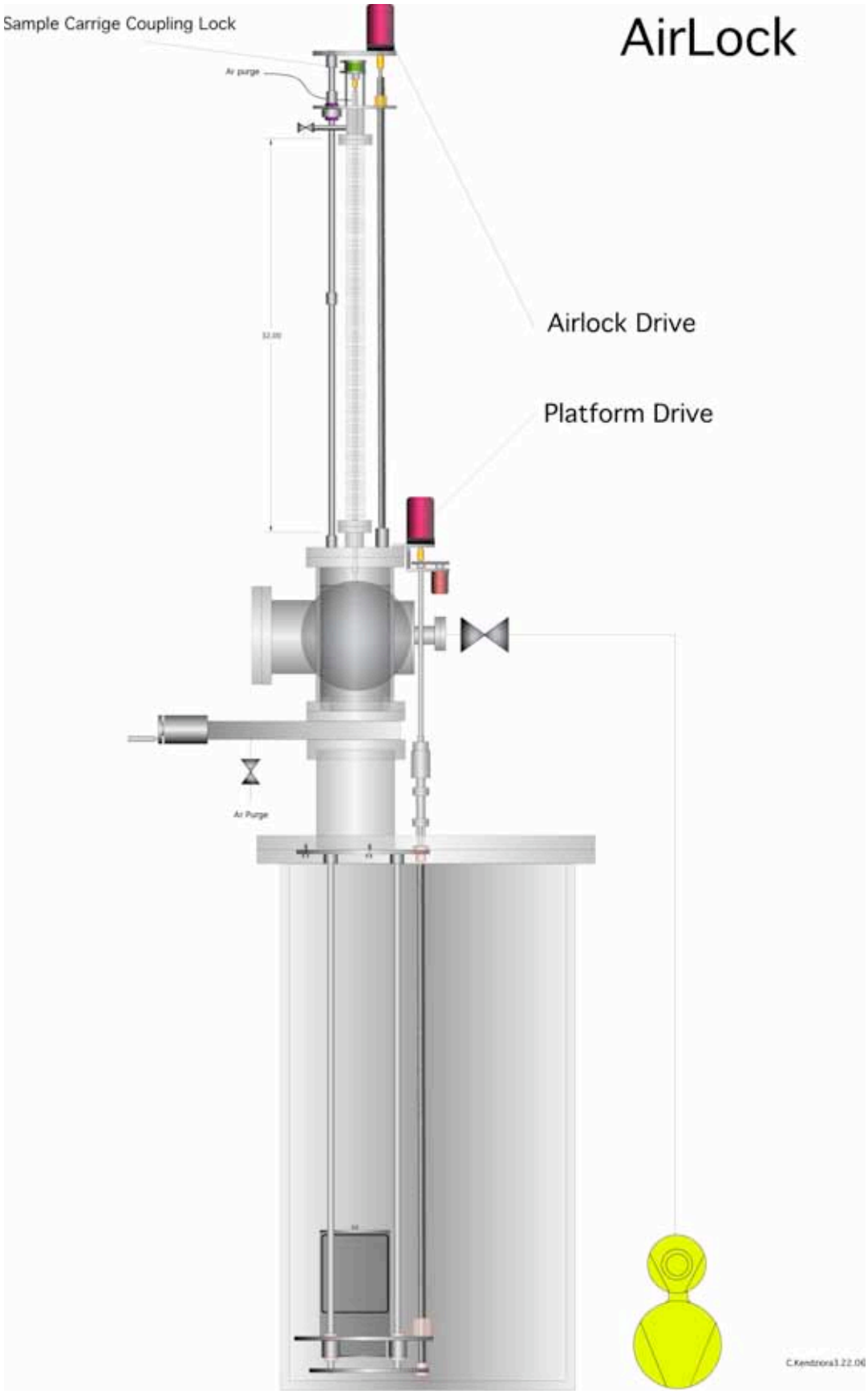


Figure 1.1.3: Schematic of the air lock used for material testing.

Figure 1.1.4: Photo of the air lock used for material testing.

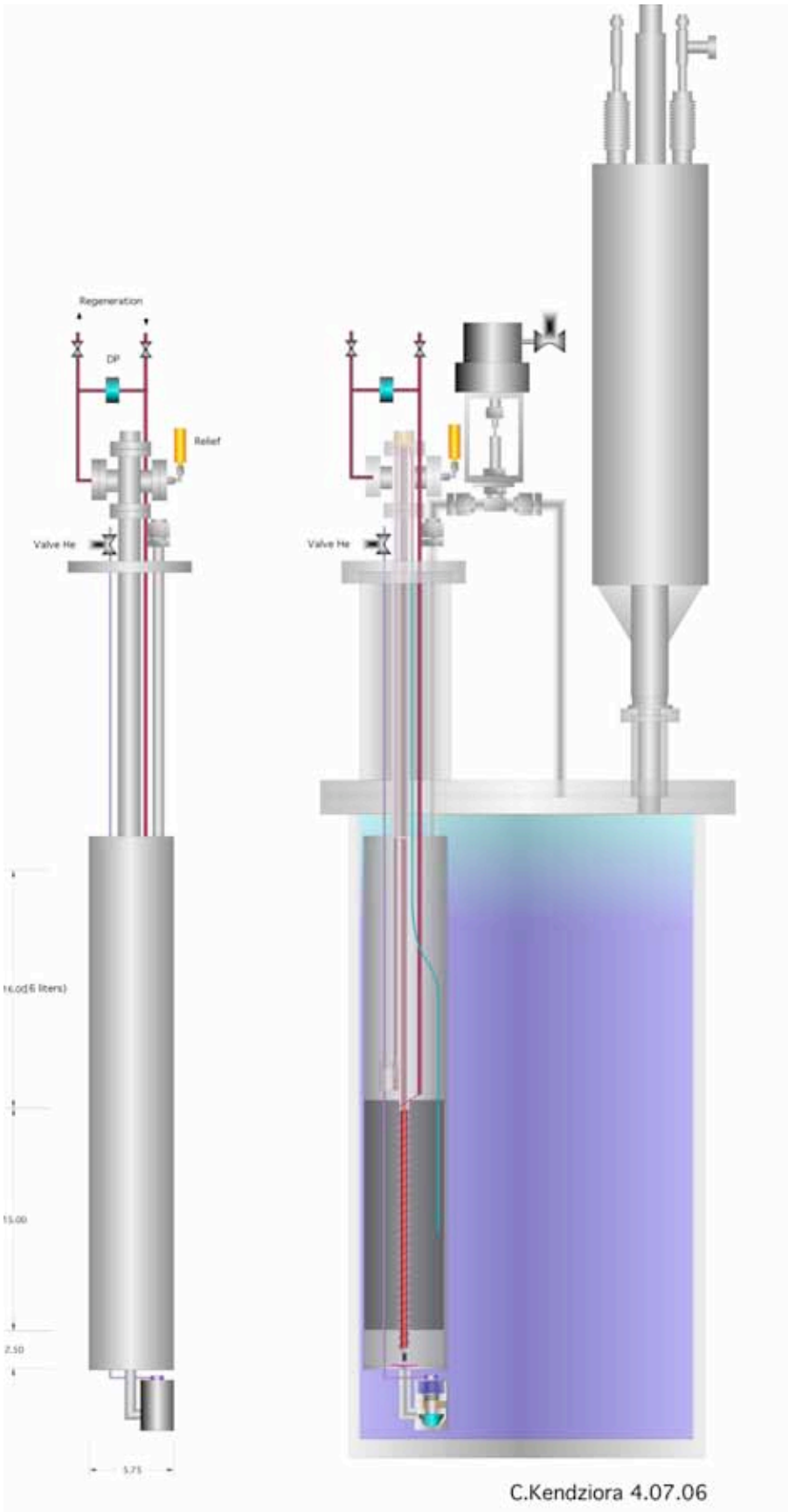


Figure 1.1.5: Schematic of the internal filter.

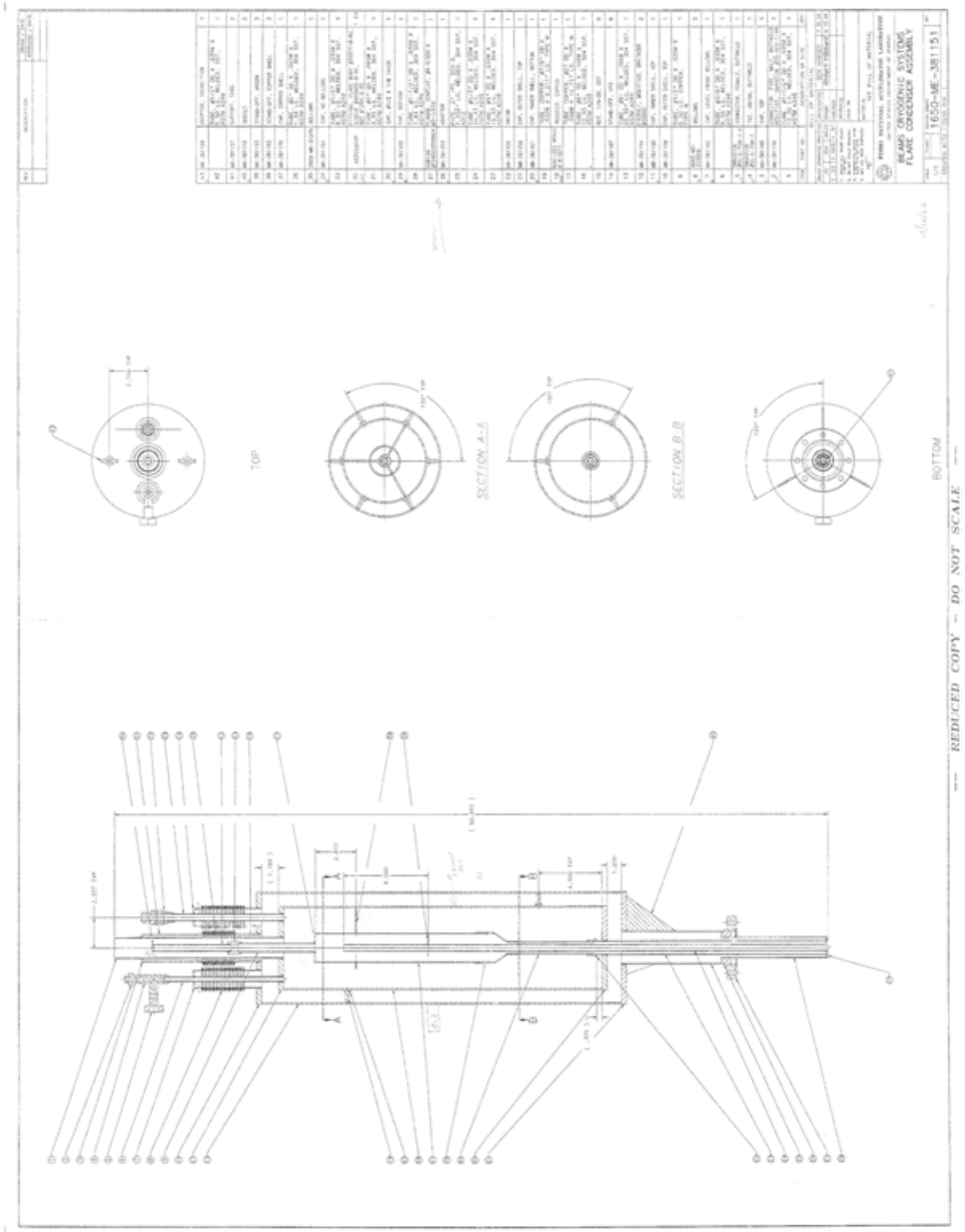


Figure 1.1.6: Drawing of the condenser.

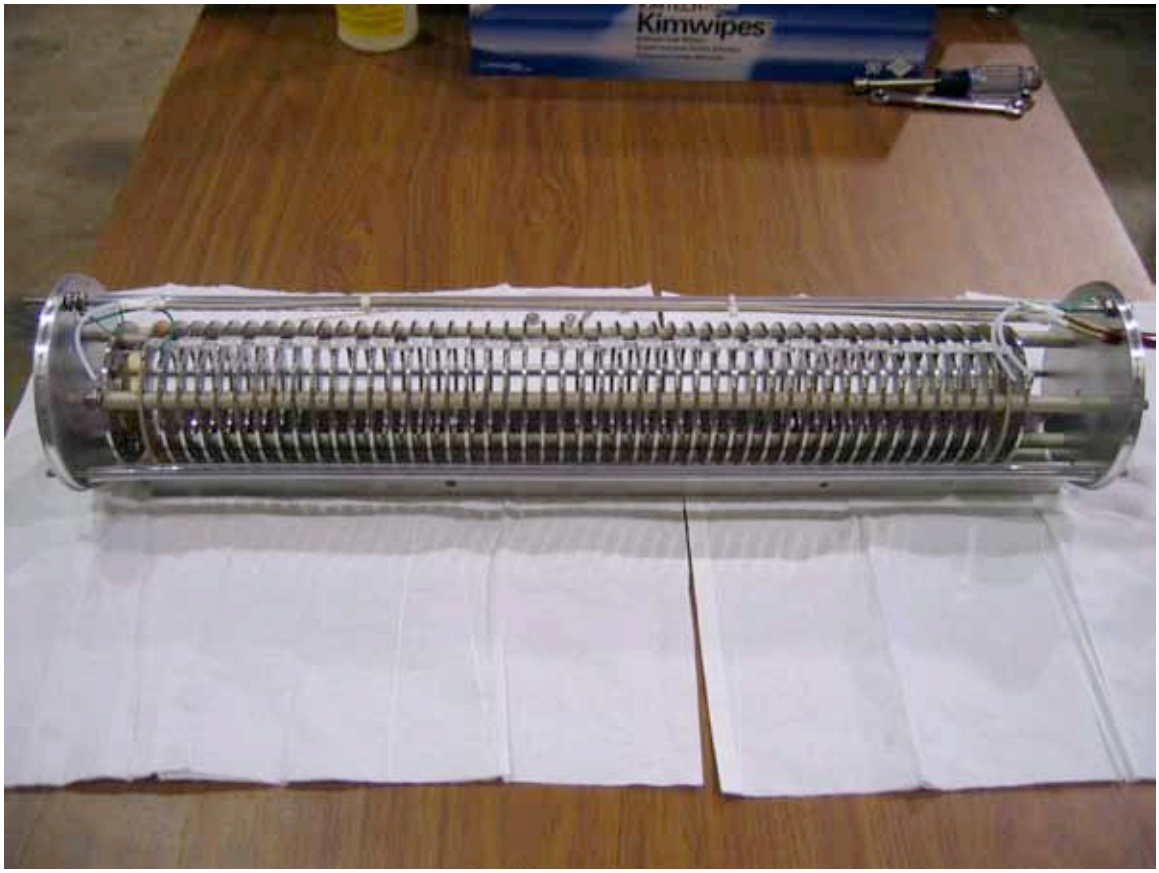


Figure 1.1.7: Photo of a purity monitor.

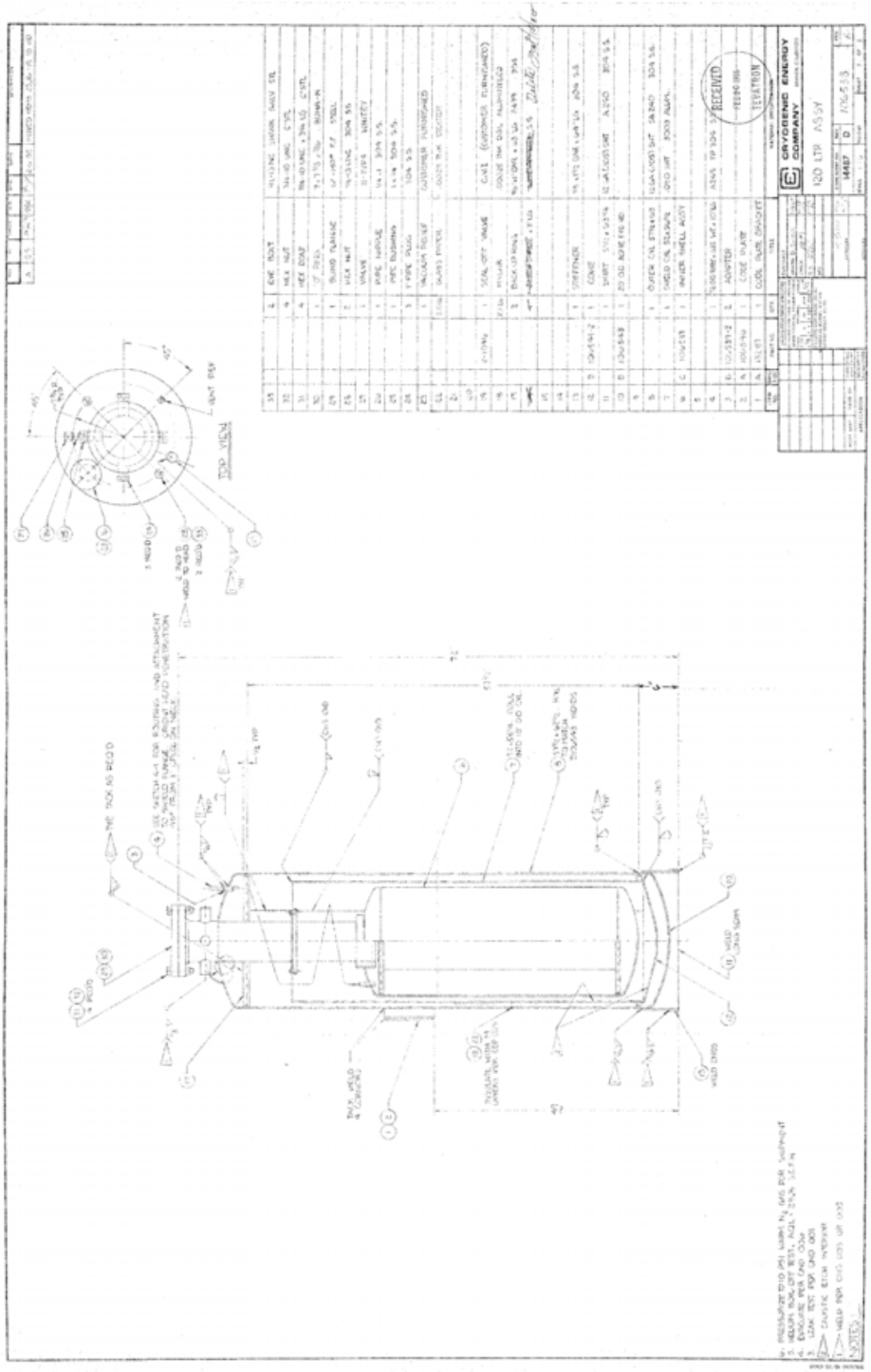


Figure 1.1.8: P-bar dewar drawing.

## 1.2 – Flow Schematic

Drawing number 3942.510-ME-435365 details both the argon and nitrogen piping. Both black and white and color versions are included.

| REV | DESCRIPTION | DRAWN | DATE |
|---|---|---|---|
| | | APPROVED | DATE |

NOTE:
1. ALL SYMBOLS CONFORM TO ANSI/ISA S5.1-1984(R1992) STANDARDS UNLESS OTHERWISE SPECIFIED.
2. LINE DEFINITIONS:
   - GAr LINES
   - VACUUM LINES
   - LAr lines
   - LN2 LINES
   - GN2 LINES
   - WALLS,BOUNDRYS,ECT.
3. LEGEND:
   - AE-ANALYZING ELEMENT
   - CV-CHECK VALVE
   - CVI-VACUUM PUMPOUT/RELIEF
   - DPT-DIFFERENTIAL PRESSURE TRANSMITTER
   - EP-PNEUMATIC VALVE
   - EV-ELECTRIC VALVE
   - FI-FLOW INDICATOR
   - FO-FLOW ORIFICE
   - HTR-HEATER
   - LT-LEVEL TRANSMITTER
   - MV-MANUEL VALVE
   - PCV-PRESSURE CONTROL VALVE
   - PE-PRESSURE ELEMENT (VACUUM)
   - PI-PRESSURE INDICATOR
   - PT-PRESSURE TRANSMITTER
   - PRV OR RV-PRESSURE REGULATING VALVE
   - PSV OR SV-PRESSURE SAFETY VALVE
   - TE-TEMPERATURE ELEMENT

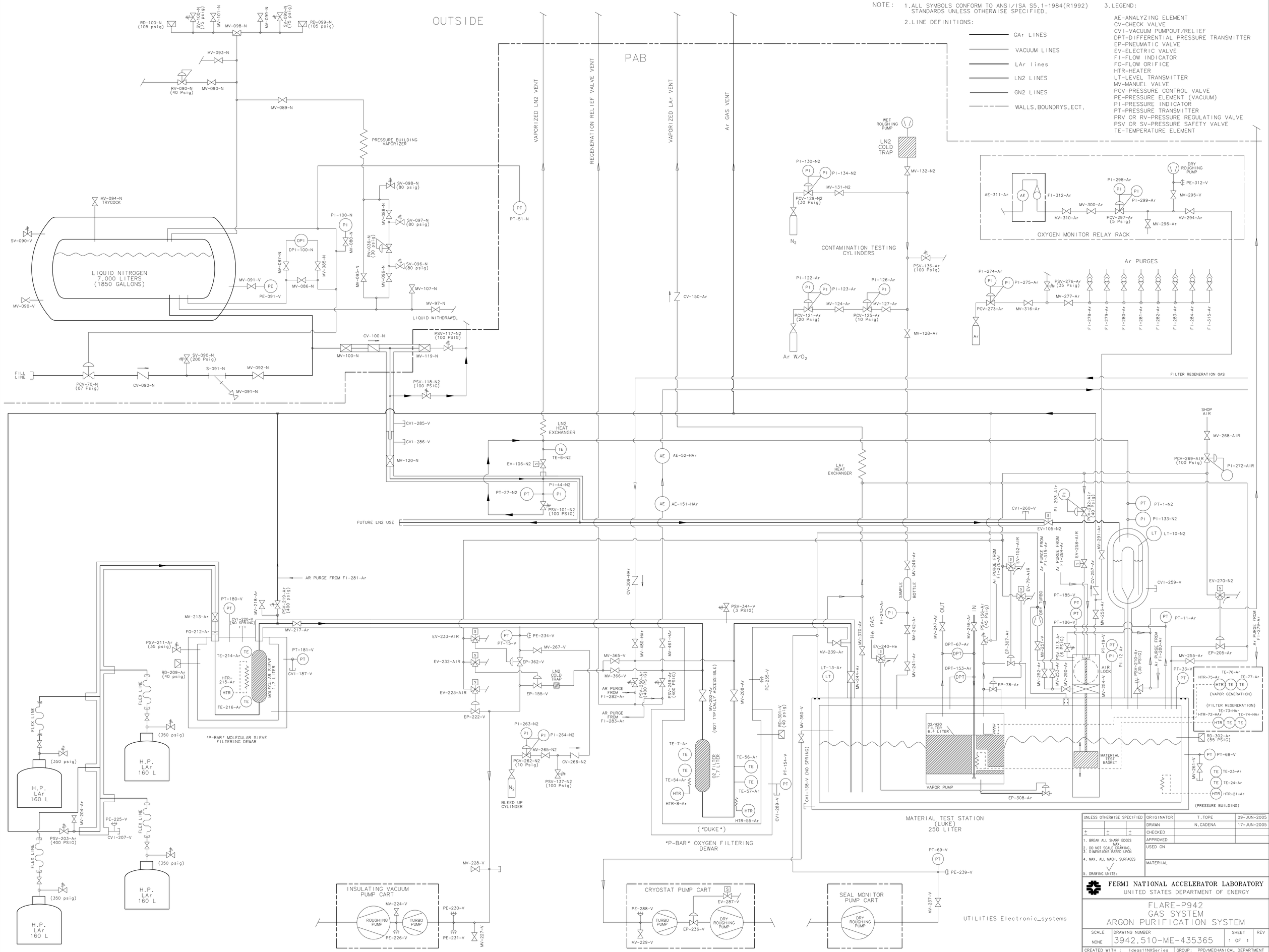


| UNLESS OTHERWISE SPECIFIED | ORIGINATOR | T.TOPE | 09-JUN-2005 |
|---|---|---|---|
| | DRAWN | N.CADENA | 17-JUN-2005 |
| ± ± ± | CHECKED | | |
| 1. BREAK ALL SHARP EDGES MAX. 2. DO NOT SCALE DRAWING. 3. DIMENSIONS BASED UPON 4. MAX. ALL MACH. SURFACES 5. DRAWING UNITS: | APPROVED | | |
| | USED ON | | |
| | MATERIAL | | |

FERMI NATIONAL ACCELERATOR LABORATORY
UNITED STATES DEPARTMENT OF ENERGY

# FLARE-P942 GAS SYSTEM ARGON PURIFICATION SYSTEM

| SCALE | DRAWING NUMBER | SHEET | REV |
|---|---|---|---|
| NONE | 3942.510-ME-435365 | 1 OF 1 | |

CREATED WITH : Ideas11NXSeries GROUP: PPD/MECHANICAL DEPARTMENT

Created: 06:50:02 on 06-06-07 (D-M-Y) By: catalan State: 1-INITIAL

| REV | DESCRIPTION | DRAWN | DATE |
|---|---|---|---|
| | | APPROVED | DATE |

NOTE:

1. ALL SYMBOLS CONFORM TO ANSI/ISA S5.1-1984(R1992) STANDARDS UNLESS OTHERWISE SPECIFIED.
2. LINE DEFINITIONS:
   - GAr LINES
   - VACUUM LINES
   - LAr lines
   - LN2 LINES
   - GN2 LINES
   - WALLS,BOUNDRYS,ECT.
3. LEGEND:
   - AE-ANALYZING ELEMENT
   - CV-CHECK VALVE
   - CVI-VACUUM PUMPOUT/RELIEF
   - DPT-DIFFERENTIAL PRESSURE TRANSMITTER
   - EP-PNEUMATIC VALVE
   - EV-ELECTRIC VALVE
   - FI-FLOW INDICATOR
   - FO-FLOW ORIFICE
   - HTR-HEATER
   - LT-LEVEL TRANSMITTER
   - MV-MANUEL VALVE
   - PCV-PRESSURE CONTROL VALVE
   - PE-PRESSURE ELEMENT (VACUUM)
   - PI-PRESSURE INDICATOR
   - PT-PRESSURE TRANSMITTER
   - PRV OR RV-PRESSURE REGULATING VALVE
   - PSV OR SV-PRESSURE SAFETY VALVE
   - TE-TEMPERATURE ELEMENT

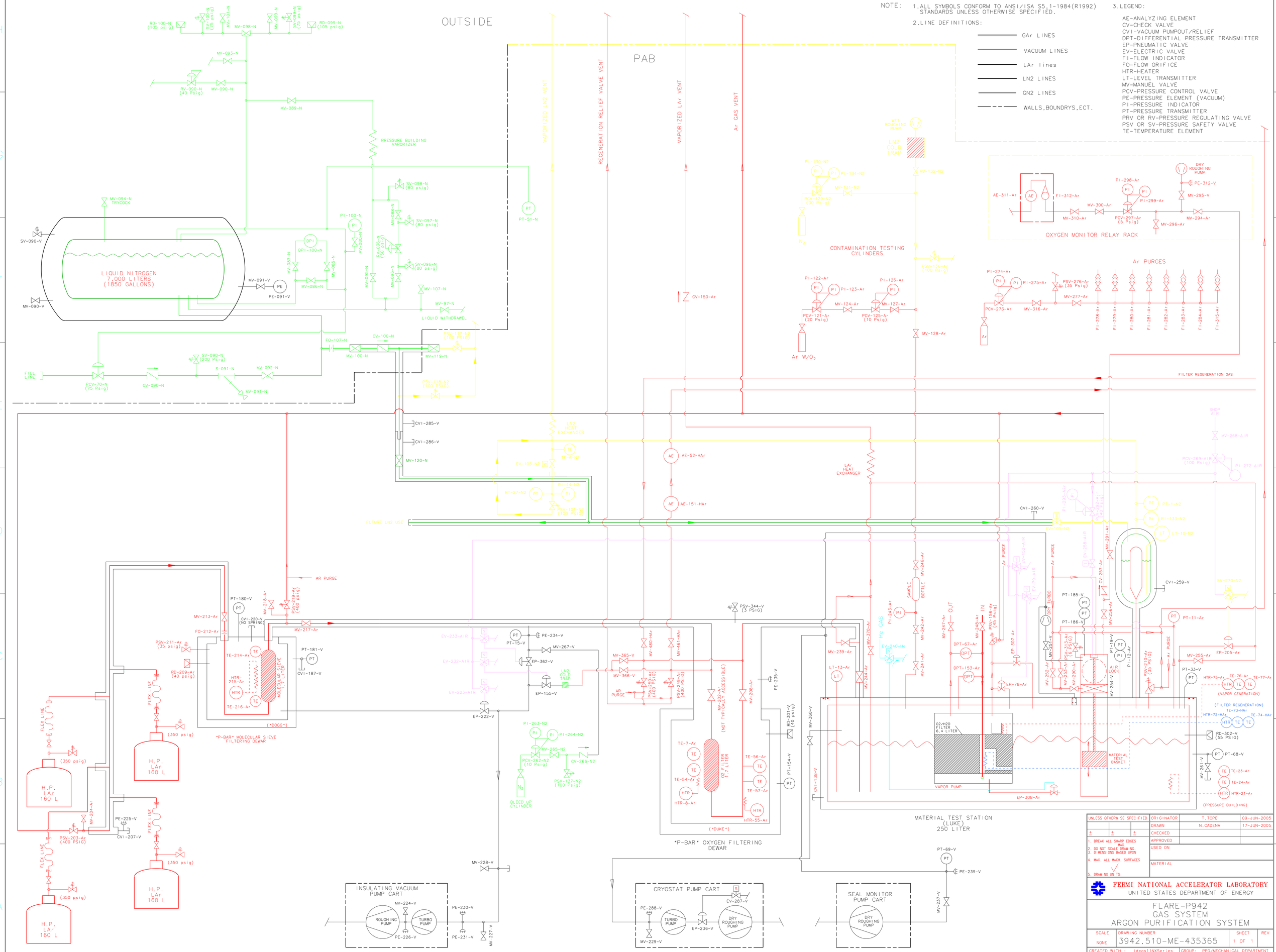


| UNLESS OTHERWISE SPECIFIED | ORIGINATOR | T. TOPE | 09-JUN-2005 |
|---|---|---|---|
| | DRAWN | N. CADENA | 17-JUN-2005 |
| ± ± ± | CHECKED | | |
| 1. BREAK ALL SHARP EDGES MAX. 2. DO NOT SCALE DRAWING. 3. DIMENSIONS BASED UPON | APPROVED | | |
| 4. MAX. ALL MACH. SURFACES √ | USED ON | | |
| 5. DRAWING UNITS: | MATERIAL | | |

**FERMI NATIONAL ACCELERATOR LABORATORY**
UNITED STATES DEPARTMENT OF ENERGY

# FLARE-P942 GAS SYSTEM ARGON PURIFICATION SYSTEM

| SCALE | DRAWING NUMBER | SHEET | REV |
|---|---|---|---|
| NONE | 3942.510-ME-435365 | 1 OF 1 | |

CREATED WITH : Ideas11NXSeries | GROUP: PPD/MECHANICAL DEPARTMENT

**1.3 - Instrument and Valve Summary**

| Type | Tag | Tag | Service | Range or Set point | Manufacturer | Model or Part # | Signal Out | Maximum Pressure | Notes |
|---|---|---|---|---|---|---|---|---|---|
| **Analyzing elements** | | | | | | | | | |
| AE | 311 | Ar | Oxygen Analyzer | 0 - 100 ppm | Delta F | DF-150 | 0 - 10 VDC | 20 psig | |
| AE | 52 | HAr | Filter regeneration moisture monitoring (close to exhaust) | -80 to + 20 C | Vaisala | DMT242A | 4-20 mA | 290 psig | |
| AE | 151 | HAr | Filter regeneration moisture monitoring (close to filter) | -60 to + 60 C | Vaisala | DMT242B | 4-20 mA | 290 psig | |
| **Check valves** | | | | | | | | | |
| CV | 90 | N | LN2 dewar fill line check valve | no spring | Check-All Valve | UN-3-150-SS | ------ | 3000 psig | |
| CV | 150 | Ar | LAr vent line | 1 psig | Circle Seal | 249B-8PP | ------ | 3000 psig | |
| CV | 100 | N | LN2 dewar liquid use line | no spring | Fermilab | 1/2" cryogenic check valve | ------ | >> 100 psig | |
| CV | 257 | Ar | "Air lock" vent line backflow prevention | 3 psig | Nupro | SS-4CA-VCR | ------ | 3000 psig | |
| CV | 266 | N2 | Insulating vacuum bleed up check valve | 0.8 psi | Circle Seal | 2598-2PP | ------ | 3000 psig | |
| CV | 309 | HAr | O2 filter regeneration check valve | < 1 psi | Parker - Veriflo Division | 36FW-442VMVM-V | ------ | 3000 psig | |
| **Pump out ports** | | | | | | | | | |
| CVI | 138 | V | Luke insulating vacuum mfg. supplied pumpout | ~ 1 atm (spring removed) | CVI | V-1046-31 | ------ | ~ atm | Russ Rucinski measured CVI relief flow |
| CVI | 187 | V | Molecular sieve pbar dewar insulating vacuum pumpout/relief | ~20 psig | CVI | V-1046-31 | ------ | ~ atm | with a spring: |
| CVI | 207 | V | Liquid argon source manifold insulating vacuum pumpout and relief | ~20 psig | CVI | V-1046-31 | ------ | ~ atm | Lift starts @ 20 psig |
| CVI | 220 | V | Pbar molecular sieve dewar inner vessel pumpout/relief | ~ 1 atm (spring removed) | CVI | V-1046-31 | ------ | ~ atm | 3.5 SCFH @ 23 psig |
| CVI | 259 | V | Luke LN2-LAr condenser insulating vacuum pumpout/relief | ~20 psig | CVI | V-1046-31 | ------ | ~ atm | >> 5 SCFH @ 30 psig |
| CVI | 260 | V | LN2 transfer line vacuum pumpout/relief near Luke | ~20 psig | CVI | V-1046-31 | ------ | ~ atm | |
| CVI | 285 | V | LN2 transfer line vacuum pumpout/relief dewar side | ~20 psig | CVI | V-1046-31 | ------ | ~ atm | |
| CVI | 286 | V | LN2 transfer line vacuum pumpout/PAB side | ~20 psig | CVI | V-1046-31 | ------ | ~ atm | |
| CVI | 289 | V | O2 filter pbar dewar insulating vacuum pumpout/relief | ~20 psig | CVI | V-1046-31 | ------ | ~ atm | |
| **Differential pressure transmitters** | | | | | | | | | |
| DPT | 67 | Ar | Luke Vapor Pump filter liquid level | 0 - 5 psid | Setra | C239 | 4-20 mA | 75 psig | |
| DPT | 100 | N | Liquid Nitrogen Dewar | 0 - 80" wc | Barton | ITI3 | 4-20 mA | 500 psig | |
| DPT | 153 | Ar | Luke Vapor Pump filter shield liquid level | 0 - 5 psid | Setra | C239 | 4-20 mA | 75 psig | |
| **Pneumatic valves** | | | | | | | | | |
| EP | 78 | Ar | Luke Vapor pump filter insulation equalization | Normally Closed - 100 psig actuation pressure | Swagelock | SS-6UW-V19-TF-6C | ------ | 2500 psig | |
| EP | 155 | V | Oxygen filter vacuum isolation | normally closed | VAT | F29615-17 | ------ | ~ atm | |
| EP | 205 | Ar | Luke Ar vent | Normally Closed - 100 psig actuation pressure | Swagelock | SS-6UW-V19-TF-6C | ------ | 2500 psig | |
| EP | 222 | V | Molecular sieve insulating vacuum isolation | normally closed | MDC | KAV-150-P | ------ | ~ atm | |
| EP | 236 | V | Cryostat pump cart inter-stage isolation (turbo protection) | normally closed | Varian | VPI251205060 | ------ | ~ atm | |
| EP | 307 | Ar | Luke vapor pump equalization valve | Normally Closed - 100 psig actuation pressure | Swagelock | SS-6UW-V19-TF-6C | ------ | 2500 psig | |
| EP | 308 | Ar | Luke vapor pump liquid inlet | 10 psig to close, vacuum to fully open | Fermilab | H2 target cold valve - print # 2726.4-MB-58267 | ------ | 45 psig | Pressure limited by bellows |
| EP | 362 | V | LAr transfer line insulating vacuum isolation | normally closed | Temascal | 45130 | ------ | ~ atm | |
| **Electric valves** | | | | | | | | | |
| EV | 79 | Air | EP-78-Ar actuation | normally closed | Asco | 8320G132 (24 VDC) | 24 VDC | 200 psig | |
| EV | 105 | N2 | LN2 transfer line into Luke condenser | normally closed | Asco | 8263G209LT (120 VAC) | 120 VAC | 100 psig | |
| EV | 106 | N2 | LN2 transfer line vent | normally closed | Asco | 8263G209LT (120 VAC) | 120 VAC | 100 psig | |
| EV | 152 | Air | EP-307-Ar actuation | normally closed | Asco | 8320G132 (24 VDC) | 24 VDC | 200 psig | |
| EV | 223 | Air | EP-222-V actuation | normally closed | Humphrey | 31039 RC | 120 VAC | 125 psig | |
| EV | 232 | Air | EP-155-V actuation | normally closed | Huba | ??? | 120 VAC | > 100 psig | Unknown model, but has been used with |
| EV | 233 | Air | EP-362-V actuation | normally closed | Humphrey | T125 4E136 | 120 VAC | 125 psig | |
| EV | 240 | He | Luke vapor pump cold valve actuation | normally closed | Asco | 8320G132 | 24 VDC | 200 psig | |
| EV | 258 | Air | Material basket catch/release mechanism actuation | normally closed | Humphrey | 062-4E1-36 | 120 VAC | 125 psig | |
| EV | 270 | N2 | EP-205-Ar actuation | normally closed | Asco | 8320G132 (24 VDC) | 24 VDC | 200 psig | |
| EV | 287 | V | EP-236-V actuation | normally open | Peter Paul Electronics | 51X00111CD | 120 VAC | ~ atm | |
| **Flowmeters** | | | | | | | | | |
| FI | 278 | Ar | Luke vapor pump trapped volume relief (PSV-156-Ar) | 0 - 50 sccm | Dwyer | RMA-151-SSV | ------ | 100 psig | |
| FI | 279 | Ar | Luke vapor pump electronic purge | 0 - 50 sccm | Dwyer | RMA-151-SSV | ------ | 100 psig | |
| FI | 280 | Ar | Luke ASME relief purge (PSV-210-Ar) | 0 - 50 sccm | Dwyer | RMA-151-SSV | ------ | 100 psig | |
| FI | 281 | Ar | Molecular sieve trapped volume relief purge (PSV-219-Ar) | 0 - 50 sccm | Dwyer | RMA-151-SSV | ------ | 100 psig | |
| FI | 282 | Ar | O2 filter inlet side trapped volume relief (PSV-249-Ar) | 0 - 50 sccm | Dwyer | RMA-151-SSV | ------ | 100 psig | |
| FI | 283 | Ar | O2 filter outlet side trapped volume relief (PSV-250-Ar) | 0 - 50 sccm | Dwyer | RMA-151-SSV | ------ | 100 psig | |
| FI | 284 | Ar | Material lock release mechanism argon purge | 0 - 50 sccm | Dwyer | RMA-151-SSV | ------ | 100 psig | |
| FI | 312 | Ar | Oxygen monitor inlet flowrate | 0 - 5 SCFH SP is 2 SCFH N2 equiv | Dwyer | VFA-3 | ------ | 150 psig | Delta-F flowmeter looks identical to a Dw |
| FI | 315 | Ar | Air lock argon purge flowmeter | 0 - 10 SCFH | Dwyer | RMB-50-SSV | ------ | 100 psig | |
| **Flow restricting orifices** | | | | | | | | | |
| FO | 212 | Ar | Liquid argon source manifold argon flow restriction | 0.122" dia. | Fermilab | ------ | ------ | ------ | |
| Heating elements | | | | | | | | | |
| HTR | 8 | HAr | Oxygen filter regeneration heater | 1000W / 240 VAC | Omega | heating tape compressed by a clamshell | ------ | ------ | |
| HTR | 21 | Ar | Vapor pressure building heater | 250 W /120 VAC | Watlow | Firerod | ------ | ------ | |
| HTR | 55 | HAr | Oxygen filter gas pre-heater | 150 W / 120 VAC | Watlow | Firerod | ------ | ------ | |
| HTR | 72 | HAr | Luke vapor pump filter regeneration heater | 1500 W / 120 VAC | Watlow | Firerod | ------ | ------ | |
| HTR | 75 | Ar | Luke vapor pump cup heater | 250 W / 120 VAC | Watlow | Firerod | ------ | ------ | |
| HTR | 215 | Ar | Molecular sieve regeneration heater | 1000W / 240 VAC | Omega | heating tape compressed by a clamshell | ------ | ------ | |
| **Liquid level transmitters** | | | | | | | | | |
| LT | 10 | N2 | Luke condenser LN2 level | 0-20.5 inches | American Magnetics | Model 286 Controller | 4-20 mA | > 35 psig | |
| LT | 13 | Ar | Luke cryostat LAr level | 0-39.62 inches | American Magnetics | Model 286 Controller | 4-20 mA | > 35 psig | |
| **Manual valves** | | | | | | | | | |
| MV | 80 | N | LN2 dewar pressure gauge isolation | ------ | Swagelock | SS-4BK-VCO | ------ | 1000 psig | |
| MV | 85 | N | LN2 dewar vapor line pressure sensing isolation | ------ | Anderson Greenwood | MM1VS 2-8174-3 | ------ | 6000 psig | |
| MV | 86 | N | LN2 dewar level gauge equalization | ------ | Anderson Greenwood | MM1VS 2-8174-3 | ------ | 6000 psig | |
| MV | 87 | N | LN2 dewar liquid line pressure sensing isolation | ------ | Anderson Greenwood | MM1VS 2-8174-3 | ------ | 6000 psig | |
| MV | 88 | N | LN2 dewar pressure building regulator isolation | ------ | Nibco | ??? | ------ | 600 psig | 600 WOG stamped on valve |
| MV | 89 | N | LN2 dewar pressure building loop isolation | ------ | Nibco | ??? | ------ | 600 psig | 600 WOG stamped on valve |
| MV | 90 | V | LN2 dewar vacuum pump out | ------ | Vacoa | FO-100 | ------ | ~ atm | |
| MV | 90 | N | LN2 dewar pressure relieving regulator isolation | ------ | Nibco | ??? | ------ | 600 psig | 600 WOG stamped on valve |
| MV | 91 | V | LN2 dewar vacuum readout isolation | ------ | Nupro | SS-4BK-VCO | ------ | 1000 psig | |
| MV | 91 | N | LN2 dewar fill line drain valve | ------ | Worcester | 1/2 C4416P | ------ | 870 psig | |
| MV | 92 | N | LN2 dewar fill line isolation | ------ | Worcester | 1 1/2 C4416P | ------ | 870 psig | |

| | | | | | | | | | |
|---|---|---|---|---|---|---|---|---|---|
| MV | 93 | N | LN2 dewar vapor vent | ------ | Nibco | ??? | ------ | 600 psig | 600 WOG stamped on valve |
| MV | 94 | N | LN2 dewar full trycock | ------ | Nibco | ??? | ------ | 600 psig | 600 WOG stamped on valve |
| MV | 95 | N | LN2 dewar pressure building loop bypass | ------ | Nibco | ??? | ------ | 600 psig | 600 WOG stamped on valve |
| MV | 96 | N | LN2 dewar pressure building regulator isolation | ------ | Nibco | ??? | ------ | 600 psig | 600 WOG stamped on valve |
| MV | 97 | N | LN2 dewar liquid withdrawal | ------ | Cryolab | ES7-86-2TPC2 | ------ | ??? | |
| MV | 98 | N | LN2 dewar relief valve selector | ------ | Anderson Greenwood | SVS-0600T-BSTC | ------ | 1200 psig | |
| MV | 99 | N | LN2 dewar vapor vent valve | ------ | Anderson Greenwood | H5VB 22 | ------ | > 75 psig | Valves were in service on dewar previous |
| MV | 100 | N | LN2 dewar liquid into PAB isolation | ------ | Cryolab | CV8-086-5WPY?2-ED | ------ | 150 psig | |
| MV | 101 | N | LN2 dewar vapor vent valve | ------ | Anderson Greenwood | H5VB 22 | ------ | > 75 psig | Valves were in service on dewar previous |
| MV | 107 | N | LN2 dewar isolation for future gas use | ------ | Nibco | ??? | ------ | 600 psig | 600 WOG stamped on valve |
| MV | 119 | N | LN2 liquid transfer line branch isolation | ------ | Cryolab | CV8-084-SWTG2 | ------ | 100 psig | |
| MV | 120 | N | LN2 liquid transfer line Luke/Bo branch isolation | ------ | Cryolab | CV8-086-SWPG2 | ------ | 150 psig | |
| MV | 124 | Ar | Ar with O2 contamination source bottle regulator outlet isolation | ------ | Scientific Gas Products | 5939 | ------ | 3000 psig | |
| MV | 127 | Ar | Ar with O2 contamination source line regulator outlet isolation | ------ | Nupro | B-4HK2 | ------ | 1000 psig | |
| MV | 128 | Ar | Gas contamination introduction isolation | ------ | Swagelock | SS-4BK-TW | ------ | 1000 psig | |
| MV | 131 | N2 | N2 contamination source regulator outlet isolation | ------ | Swagelock | SS-4BK-TW | ------ | 1000 psig | |
| MV | 132 | N2 | Contamination manifold vacuum isolation | ------ | Swagelock | SS-4BK-VCO | ------ | 1000 psig | |
| MV | 202 | Ar | Filter assembly inlet isolation | ------ | Swagelock | SS-4BG-V51 | ------ | 1000 psig | |
| MV | 204 | Ar | Liquid argon source manifold argon line isolation/pumpout | ------ | Swagelock | SS-8BG-V47 | ------ | 1000 psig | |
| MV | 208 | Ar | Filter assembly outlet isolation | | Swagelock | SS-4BG-V51 | ------ | 1000 psig | |
| MV | 213 | Ar | Liquid argon source manifold isolation | ------ | Swagelock | SS-8BG-V47 | ------ | 1000 psig | |
| MV | 217 | Ar | Molecular sieve isolation | ------ | Swagelock | SS-8BG-V47 | ------ | 1000 psig | |
| MV | 218 | Ar | Molecular sieve isolation/pumpout | ------ | Swagelock | SS-8BG-V47 | ------ | 1000 psig | |
| MV | 224 | V | Transfer line insulating vacuum pump cart roughing pump port isolation | ------ | Leybold | 281 53B1 | ------ | ~ atm | |
| MV | 227 | V | Insulating vacuum pump cart port isolation | ------ | MKS | 22406 | ------ | ~ atm | |
| MV | 228 | V | Insulating vacuum pump cart port isolation | ------ | Leybold | 281 53B1 | ------ | ~ atm | |
| MV | 229 | V | Cryostat pump cart port isolation | ------ | Unknown model | Unknown brand | ------ | ~ atm | |
| MV | 237 | V | Seal monitor pump cart isolation | ------ | Norcal | 3879-01455 | ------ | ~ atm | |
| MV | 239 | Ar | Liquid argon "dump" before Luke | ------ | Swagelock | SS-8BG-V47 | ------ | 1000 psig | |
| MV | 241 | Ar | Gas contamination introduction isolation | ------ | Parker/Veriflo | 930 series | ------ | 250 psig | |
| MV | 242 | Ar | Gas contamination introduction isolation | ------ | Swagelock | 6LV-DLBW4 | ------ | 3500 psig | |
| MV | 244 | Ar | Luke cryo isolation valve | ------ | Swagelock | SS-8BG-V47 | ------ | 1000 psig | |
| MV | 246 | Ar | Gas contamination introduction isolation | ------ | Swagelock | 6LV-DLBW4 | ------ | 3500 psig | |
| MV | 247 | Ar | Luke vapor pump filter regeneration gas outlet isolation | ------ | Swagelock | SS-8BG-V47 | ------ | 1000 psig | Not installed yet |
| MV | 248 | Ar | Luke vapor pump filter regeneration gas inlet isolation | ------ | Swagelock | SS-8BG-V47 | ------ | 1000 psig | Not installed yet |
| MV | 251 | V | "Air lock" vacuum isolation | ------ | MDC | AV-150 | ------ | ~ atm | |
| MV | 252 | Ar | "Air lock" argon bottle purge isolation | ------ | Swagelock | SS-4BG-V51 | ------ | 1000 psig | |
| MV | 253 | Ar | "Air lock" cryostat vapor purge isolation | ------ | Swagelock | SS-4BG-V51 | ------ | 1000 psig | |
| MV | 254 | V | Luke materials test station air lock pass thru | ------ | Norcal | GVM-6002-CF | ------ | > 35 psig | See material stress section |
| MV | 255 | Ar | Luke manual vapor vent | ------ | Swagelock | SS-8BG-V47 | ------ | 1000 psig | |
| MV | 256 | Ar | "Air lock" purge vent isolation | ------ | Swagelock | SS-4BG-V51 | ------ | 1000 psig | |
| MV | 261 | V | Luke insulating vacuum isolation/pumpout | ------ | Swagelock | SS-4BG-V51 | ------ | 1000 psig | |
| MV | 265 | N2 | Bleed up cylinder regulator outlet isolation | ------ | Parker | ??? | ------ | ~ 1000 psig | Typical forged brass regulator isolation va |
| MV | 267 | V | Transfer line insulating vacuum nitrogen bleed up isolation | ------ | Swagelock | SS-4BK-VCO | ------ | 1000 psig | |
| MV | 268 | Air | Shop air isolation | ------ | Worcester | 1/2" 416N SE | ------ | 250 psig | |
| MV | 277 | Ar | Argon purge regulator outlet isolation | ------ | Legris | Appears to be a 4812 10 17 | ------ | 2030 psig | |
| MV | 290 | Ar | Air lock purge inlet isolation | ------ | Swagelock | SS-4BG-V51 | ------ | 1000 psig | |
| MV | 291 | Ar | Air lock purge oxygen monitor isolation | ------ | Swagelock | SS-4BG-V51 | ------ | 1000 psig | |
| MV | 294 | Ar | Oxygen monitor manifold inlet isolation | ------ | Swagelock | SS-4BG-V51 | ------ | 1000 psig | |
| MV | 295 | Ar | Oxygen monitor vacuum pump isolation | ------ | Swagelock | SS-4BG-V51 | ------ | 1000 psig | |
| MV | 296 | Ar | Oxygen monitor open port isolation | ------ | Swagelock | SS-4BG-V51 | ------ | 1000 psig | |
| MV | 300 | Ar | Oxygen monitor metering valve | ------ | Swagelock | SS-4MG-XX | ------ | 700 psig | |
| MV | 310 | Ar | Oxygen monitor inlet isolation | ------ | Nupro | SS-DLXX | ------ | 3500 psig | |
| MV | 316 | Ar | Argon purge flowmeter manifold inlet isolation | ------ | ??? | ??? | ------ | ~ 1000 psig | Typical forged brass regulator isolation va |
| MV | 360 | V | Luke vacuum pumpout isolation valve | ------ | MDC | AV-250 | ------ | ~ atm | |
| MV | 365 | V | O2 filter vacuum isolation (downstream tap) | ------ | Swagelock | SS-8BG-V47 | ------ | 1000 psig | |
| MV | 366 | V | O2 filter vacuum isolation (upstream tap) | ------ | Swagelock | SS-8BG-V47 | ------ | 1000 psig | |
| MV | 370 | Ar | Luke drain valve | ------ | Swagelock | SS-8BG-V47 | ------ | 1000 psig | |
| MV | 461 | HAr | One pass fill filter regeneration isolation | ------ | Swagelock | SS-8BG-V47 | ------ | 1000 psig | |
| MV | 480 | HAr | One pass fill filter regeneration isolation | ------ | Swagelock | SS-8BG-V47 | ------ | 1000 psig | |

**Pressure regulators and pressure control valves**

| | | | | | | | | |
|---|---|---|---|---|---|---|---|---|
| PCV | 70 | N | Fill shut off valve | 87 psig (116% MAWP) | Messer / Chart | MG-97 P | ------ | 600 psig |
| PCV | 121 | Ar | Ar with O2 contamination source bottle regulator | 30 psig | Scientific Gas Products | R35D 350 | ------ | 3000 psig |
| PCV | 125 | Ar | Ar with O2 contamination source line regulator | 10 psig (25 psig max outlet) | Air Products | E11-B-N141A | ------ | 400 psig |
| PCV | 129 | N2 | Nitrogen contamination source bottle regulator | 30 psig | Parker / Veriflo | 735 series | ------ | 3500 psig |
| PCV | 262 | N2 | LAr transfer line insulating vacuum bleed up regulator | 10 psig | Victor | VTS 450B | ------ | 3000 psig |
| PCV | 269 | Air | Shop air point of use regulator | 100 psig (0-125 psig range) | Norgren | B12-496-M3LA | ------ | 250 psig |
| PCV | 273 | Ar | Argon purge bottle regulator | 15 psig | Victor | VTS 450B | ------ | 3000 psig |
| PCV | 292 | Air | Materials basket catch/release mechanism line pressure regulation | 40 psig | Humphrey | 062-4E1-36 | ------ | 125 psig |
| PCV | 297 | Ar | Oxygen monitor inlet pressure regulation | 5 psig | Matheson | 9463-4-V4FM | ------ | 3000 psig |

**Vacuum pressure elements**

| | | | | | | | | |
|---|---|---|---|---|---|---|---|---|
| PE | 91 | V | LN2 dewar insulating vacuum | $10^{-4}$- 1000 Torr | Hastings | gauge tube | ----- | ~ atm |
| PE | 225 | V | Liquid argon source manifold insulating vacuum | $10^{-4}$- 1000 Torr | Granville-Phillips | 275 series gauge tube | ----- | ~ atm |
| PE | 226 | V | Insulating vacuum pump cart inter stage pressure | $10^{-4}$- 1000 Torr | Granville-Phillips | 275 series gauge tube | ----- | ~ atm |
| PE | 230 | V | Insulating vacuum pump cart pressure | $10^{-4}$- 1000 Torr | Granville-Phillips | 275 series gauge tube | ----- | ~ atm |
| PE | 231 | V | Insulating vacuum pump cart pressure | $10^{-4}$- 1000 Torr | Granville-Phillips | 275 series gauge tube | ----- | ~ atm |
| PE | 234 | V | Transfer line insulating vacuum pressure | $10^{-4}$- 1000 Torr | Granville-Phillips | 275 series gauge tube | ----- | ~ atm |
| PE | 235 | V | Oxygen filter insulating vacuum | $10^{-4}$- 1000 Torr | Granville-Phillips | 275 series gauge tube | ----- | ~ atm |
| PE | 238 | V | Seal monitor pump cart pressure | $10^{-4}$- 1000 Torr | Granville-Phillips | 275 series gauge tube | ----- | ~ atm |
| PE | 288 | V | Cryostat pump cart vacuum pressure | $10^{-4}$- 1000 Torr | Hastings | gauge tube | ----- | ~ atm |
| PE | 312 | V | Oxygen monitor manifold vacuum pump inlet pressure | $10^{-4}$- 1000 Torr | Granville-Phillips | 275 series gauge tube | ----- | ~ atm |

**Pressure indicating gauges**

| | | | | | | | | |
|---|---|---|---|---|---|---|---|---|
| PI | 12 | Ar | Luke cryostat Ar pressure | VAC-0-60 psig | AMETEK | 1535-V-0-60-PSI/KPA-CBM-FVCR-FR | ----- | 60 psig |
| PI | 44 | N2 | LN2 transfer line pressure | 0 - 150 psig | US Gauge | Unknown model | ----- | 150 psig |
| PI | 100 | N | LN2 dewar pressure | 0 - 100 psig | US Gauge | 150025X | ----- | 100 psig |
| PI | 122 | Ar | Ar with O2 contamination source bottle pressure | 0 - 3000 psig | Scientific Gas Products | Unknown model | ----- | 3000 psig |
| PI | 123 | Ar | Ar with O2 contamination source regulated bottle pressure | 30 - 0 - 30 psig | US Gauge | Unknown model | ----- | 30 psig |

| | | | | | | | | | |
|---|---|---|---|---|---|---|---|---|---|
| PI | 126 | Ar | Ar with O2 contamination source regulated line pressure | 30 - 0 - 30 psig | Unknown brand | Unknown model | ----- | 30 psig | |
| PI | 130 | N2 | N2 contamination source bottle pressure | 0 - 3000 psig | Wika | Unknown model | ----- | 3000 psig | |
| PI | 133 | N2 | LN2 vent back pressure | 30 - 0 - 30 psig | US gauge | Unknown model | ----- | 30 psig | |
| PI | 134 | N2 | N2 contamination regulated pressure | 0 - 60 psig | Wika | Unknown model | ----- | 60 psig | |
| PI | 293 | Air | Materials basket catch/release mechanism line pressure regulator outlet | 0 - 200 psig | ??? | ??? | ----- | 200 psig | |
| PI | 243 | Ar | Gas contamination sample bottle isolation | VAC-0-150 psig | AMETEK | 160552 | ----- | 150 psig | |
| PI | 263 | N2 | Bleed up cylinder bottle pressure | 0 - 4000 psig | US Gauge | BU-2581-AQ | ----- | 4000 psig | |
| PI | 264 | N2 | Bleed up cylinder regulated pressure | 0 - 60 psig | US Gauge | CU-2581-HY | ----- | 60 psig | |
| PI | 272 | Air | Shop air regulated pressure | 0 - 160 psig | Unknown brand | Unknown model | ----- | 160 psig | |
| PI | 274 | Ar | Argon purge cylinder pressure | 0 - 4000 psig | US Gauge | BU-2581-AQ | ----- | 4000 psig | |
| PI | 275 | Ar | Argon purge cylinder regulated pressure | 0 - 60 psig | US Gauge | CU-2581-HY | ----- | 60 psig | |
| PI | 298 | Ar | Oxygen monitor line pressure regulator inlet pressure | 0 - 3000 psig | Matheson | 63 - 2233V | ----- | 3000 psig | |
| PI | 299 | Ar | Oxygen monitor line pressure regulator outlet pressure | 30 - 0 - 60 psig | Matheson | 63 - 2206V | ----- | 60 psig | |

**Pressure relief valves**

| | | | | | | | | | |
|---|---|---|---|---|---|---|---|---|---|
| PSV | 101 | N2 | LN2 transfer line trapped volume relief | 100 psig | Circle Seal | 5100-2MP | ----- | 2400 psig | |
| PSV | 117 | N2 | LN2 transfer line trapped volume relief | 100 psig | Circle Seal | 5100-2MP | ----- | 2400 psig | |
| PSV | 118 | N2 | LN2 transfer line trapped volume relief | 100 psig | Circle Seal | 5100-2MP | ----- | 2400 psig | |
| PSV | 136 | Ar | Contamination gas supply line relief | 100 psig | Circle Seal | 5100-2MP | ----- | 2400 psig | |
| PSV | 137 | N2 | Bleed up gas supply line relief | 100 psig | Circle Seal | 5100-2MP | ----- | 2400 psig | |
| PSV | 156 | Ar | Luke vapor pump trapped volume relief | 45 psig | Circle Seal | 5100-4MP | ----- | 2400 psig | |
| PSV | 203 | Ar | Liquid argon source manifold trapped volume relief | 400 | Circle Seal | 5100-4MP | ----- | 2400 psig | |
| PSV | 210 | Ar | Luke LAr volume pressure relief | 35 psig | Anderson Greenwood | 83SF1216F | ----- | 2000 psig | |
| PSV | 211 | Ar | Pbar molecular sieve filter dewar inner vessel relief | 35 psig | Circle Seal | 5100-8MP | ----- | 2400 psig | CVI-220-V protects the dewar |
| PSV | 219 | Ar | Molecular sieve trapped volume relief | 400 | Circle Seal | 5100-2MP | ----- | 2400 psig | |
| PSV | 249 | Ar | LAr transfer line trapped volume relief | 400 psig | Circle Seal | 5100-2MP | ----- | 2400 psig | |
| PSV | 250 | Ar | LAr transfer line trapped volume relief | 400 psig | Circle Seal | 5100-2MP | ----- | 2400 psig | |
| PSV | 276 | Ar | Argon purge pressure relief | 30 psig | Circle Seal | 5200-2MP | ----- | 2400 psig | |
| PSV | 313 | Ar | Materials lock pressure relief for bellows protection | ~6 psig | Circle Seal | 500-8MP | ----- | 2400 psig | |
| PSV | 344 | V | LAr transfer line vacuum relief | ~3 psig | Fermilab | 4 inch parallel plate relief | ----- | ----- | |

**Pressure transmitters**

| | | | | | | | | | |
|---|---|---|---|---|---|---|---|---|---|
| PT | 1 | N2 | Luke condenser LN2 back pressure | 0-50 psig | Setra | C206 | 4-20 mA | 150 psig | |
| PT | 11 | Ar | Luke Ar vapor pressure | 0-50 psia | Setra | GCT-225 (2251-050P-A-D4-11-B1) | 4-20 mA | 75 psig | |
| PT | 15 | V | LAr transfer line insulating vacuum | $10^{-4}$- 1Torr linear & $10^{-4}$- 1000 Torr non-linear | Granville-Phillips | 275857-EU | 0-10 VDC | ~ atm | |
| PT | 19 | V | Luke Argon volume rough vacuum | $10^{-4}$- 760 Torr | Varian (Controller Part# L8350301) | ConvecTorr gauge board (Part# L9887301) | 0 - 7 VDC, 1 V per decade log-linear | ~ atm | |
| PT | 27 | N2 | Nitrogen transfer line pressure | 0-100 psig | Setra | 205-2 | 0-5 DC | 100 psig | |
| PT | 33 | V | Luke Argon volume high vacuum | $10^{-11}$ Torr to $10^{-3}$ Torr | Varian (Controller Part# L8350301) | UHV Bayard-Alpert gauge board (Part# L8321301) | 0-10 VDC, 1 V per decade log-linear | ~ atm | |
| PT | 51 | N | LN2 dewar pressure transmitter | 0-100 psig | Setra | 205-2 | 0-5 DC | ~ atm | |
| PT | 68 | V | Luke dewar insulating vacuum | $10^{-4}$- 1Torr linear & $10^{-4}$- 1000 Torr non-linear | Granville-Phillips | 275857-EU | 0-10 VDC | ~ atm | |
| PT | 69 | V | Luke seal monitoring at vacuum pump | $10^{-4}$- 1Torr linear & $10^{-4}$- 1000 Torr non-linear | Granville-Phillips | 275857-EU | 0-10 VDC | ~ atm | |
| PT | 180 | V | P-bar mole sieve filter dewar - filter insulating vacuum | $10^{-4}$-1Torr linear & $10^{-4}$-1000 Torr non-linear | Granville-Phillips | 275857-EU | 0-10 VDC | ~ atm | |
| PT | 181 | V | P-bar mole sieve filter dewar - dewar insulating vacuum | $10^{-4}$-1Torr linear & $10^{-4}$-1000 Torr non-linear | Granville-Phillips | 275857-EU | 0-10 VDC | ~ atm | |
| PT | 185 | V | Materials lock rough vacuum | $10^{-4}$- 760 Torr | Varian (Controller Part# L8350301) | ConvecTorr gauge board (Part# L9887301) | 0 - 7 VDC, 1 V per decade log-linear | ~ atm | |
| PT | 186 | V | Materials lock high vacuum | $10^{-11}$ Torr to $10^{-3}$ Torr | Varian (Controller Part# L8350301) | UHV Bayard-Alpert gauge board (Part# L8321301) | 0-10 VDC, 1 V per decade log-linear | ~ atm | |
| PT | 154 | V | Pbar oxygen filtering dewar filter insulating vacuum | $10^{-4}$-1Torr linear & $10^{-4}$-1000 Torr non-linear | Granville-Phillips | 275857-EU | 0-10 VDC | ~ atm | |

**Rupture disks**

| | | | | | | | | | |
|---|---|---|---|---|---|---|---|---|---|
| RD | 99 | N | LN2 dewar rupture disk | 105 psig | Fike | CPU BT | ----- | > 105 psig | |
| RD | 100 | N | LN2 dewar rupture disk | 105 psig | Fike | CPU BT | ----- | > 105 psig | |
| RD | 209 | Ar | Pbar molecular sieve filter dewar inner vessel relief | 40 psig | Fike | CPV BT (1 inch) | ----- | 275 psig | CVI-220-V protects the dewar |
| RD | 301 | V | Pbar oxygen filtering dewar filter insulating volume pressure relief | 40 psig | Fike | CPV BT (1 inch) | ----- | 275 psig | PSV-344-V protects the dewar |
| RD | 302 | V | Luke cryostat LAr volume pressure relief | 55 psig | BS&B | JRS | ----- | > 55 psig | |

**Pressure regulators**

| | | | | | | | | | |
|---|---|---|---|---|---|---|---|---|---|
| RV | 36 | N | LN2 dewar pressure building regulator | 30 psig | Cash Acme | B | ----- | 400 psig | |
| RV | 90 | N | LN2 dewar pressure relieving regulator | 35 psig | Cash Acme | FR | ----- | 400 psig | |

**Strainers**

| | | | | | | | | | |
|---|---|---|---|---|---|---|---|---|---|
| S | 91 | N | LN2 dewar fill line strainer | ------ | Mueller | 1715 Class 300 | ----- | 500 psig @ 150 °F | |

**Relief valves**

| | | | | | | | | | |
|---|---|---|---|---|---|---|---|---|---|
| SV | 90 | N | LN2 dewar fill line trapped volume relief | 200 psig | Circle Seal | 5120B-4MP-200 | ----- | 2400 psig | |
| SV | 90 | V | LN2 dewar vacuum jacket relief | ~ 0 psig, no spring | Circle Seal | Parallel Plate - 3.5" | ----- | ~ atm | |
| SV | 96 | N | LN2 dewar pressure building loop trapped volume relief | 80 psig | Circle Seal | 5159B-4MP-80 | ----- | 2400 psig | |
| SV | 97 | N | LN2 dewar pressure building loop trapped volume relief | 80 psig | Circle Seal | 5159B-4MP-80 | ----- | 2400 psig | |
| SV | 98 | N | LN2 dewar pressure building loop trapped volume relief | 80 psig | Circle Seal | 5159B-4MP-80 | ----- | 2400 psig | |
| SV | 99 | N | LN2 dewar relief valve | 75 psig | Anderson Greenwood | 81S12166 | ----- | > 75 psig | |
| SV | 100 | N | LN2 dewar relief valve | 75 psig | Anderson Greenwood | 81S12166 | ----- | > 75 psig | |

**Temperature elements**

| | | | | | | | | | |
|---|---|---|---|---|---|---|---|---|---|
| TE | 6 | N2 | LN2 transfer line cool down temperature (control) | 70-400K | Omega | Platinum RTD (PR-19-2-100-1/8-6-E) | ----- | ----- | |
| TE | 7 | Ar | O2 filter internal temperature (hard wired interlock) | -200 to 1300 C | Omega | Type K thermocouple | ----- | ----- | |
| TE | 23 | Ar | HTR-21-Ar internal temperature (read out) | -200 to 1300 C | Watlow | Type K thermocouple | ----- | ----- | |
| TE | 24 | Ar | HTR-21-Ar internal temperature (hard wired interlock) | -200 to 1300 C | Watlow | Type K thermocouple | ----- | ----- | |
| TE | 54 | Ar | O2 filter internal temperature (read out) | 70-400K | Minco | 100 ohm platinum RTD (Part # S201PD) | ----- | ----- | |
| TE | 56 | Ar | O2 filter regeneration gas pre-heater temperature (control) | -200 to 1300 C | Omega | Type K thermocouple | ----- | ----- | |
| TE | 57 | Ar | O2 filter regeneration gas pre-heater temperature (hard wired interlock) | -200 to 1300 C | Omega | Type K thermocouple | ----- | ----- | |
| TE | 73 | HAr | Luke Vapor pump filter regeneration heater (control) | -200 to 1300 C | Omega | Type K thermocouple | ----- | ----- | |
| TE | 74 | HAr | Luke Vapor pump filter regeneration heater (hard wired interlock) | -200 to 1300 C | Omega | Type K thermocouple | ----- | ----- | |
| TE | 76 | Ar | Luke Vapor pump "cup" heater (control) | -200 to 1300 C | Omega | Type K thermocouple | ----- | ----- | |
| TE | 77 | Ar | Luke Vapor pump "cup" heater (hard wired interlock) | -200 to 1300 C | Omega | Type K thermocouple | ----- | ----- | |
| TE | 81 | HAr | Luke Vapor pump filter bed | -200 to 1300 C | Omega | Type K thermocouple | ----- | ----- | |
| TE | 82 | HAr | Luke Vapor pump filter bed | -200 to 1300 C | Omega | Type K thermocouple | ----- | ----- | |
| TE | 83 | HAr | Luke Vapor pump filter bed | -200 to 1300 C | Omega | Type K thermocouple | ----- | ----- | |
| TE | 214 | Ar | Molecular sieve regeneration temperature (hard wired interlock) | -200 to 1300 C | Omega | Type K thermocouple | ----- | ----- | |
| TE | 216 | Ar | Molecular sieve regeneration temperature (controls) | -200 to 1300 C | Omega | Type K thermocouple | ----- | ----- | |

## 1.4 - System Control Loops and Interlocks

The safety of the cryogenic system does NOT depend upon the proper execution of any control loop or interlock. The system does include a Beckhoff programmable logic controller (PLC). The controller will have a loop that controls the flow of liquid nitrogen into the condenser based upon the desired pressure in the cryostat. The PLC will also contain a control loop for each of the 6 heaters in the system including the vapor pump. The relief valves are sized to handle the maximum output of each heater. Each heater installation includes two temperature sensors. One sensor is read out by the PLC and the other is hardwired to an interlock that drops the AC power if the sensor temperature is too high. All heaters are contained within stainless steel vessels making it extremely unlikely a malfunction can start a fire.

Drawing 3942.520-EE-435364 contains the control system electrical schematics.

| REV | DESCRIPTION | DRAWN | DATE |
|---|---|---|---|
| | | APPROVED | DATE |

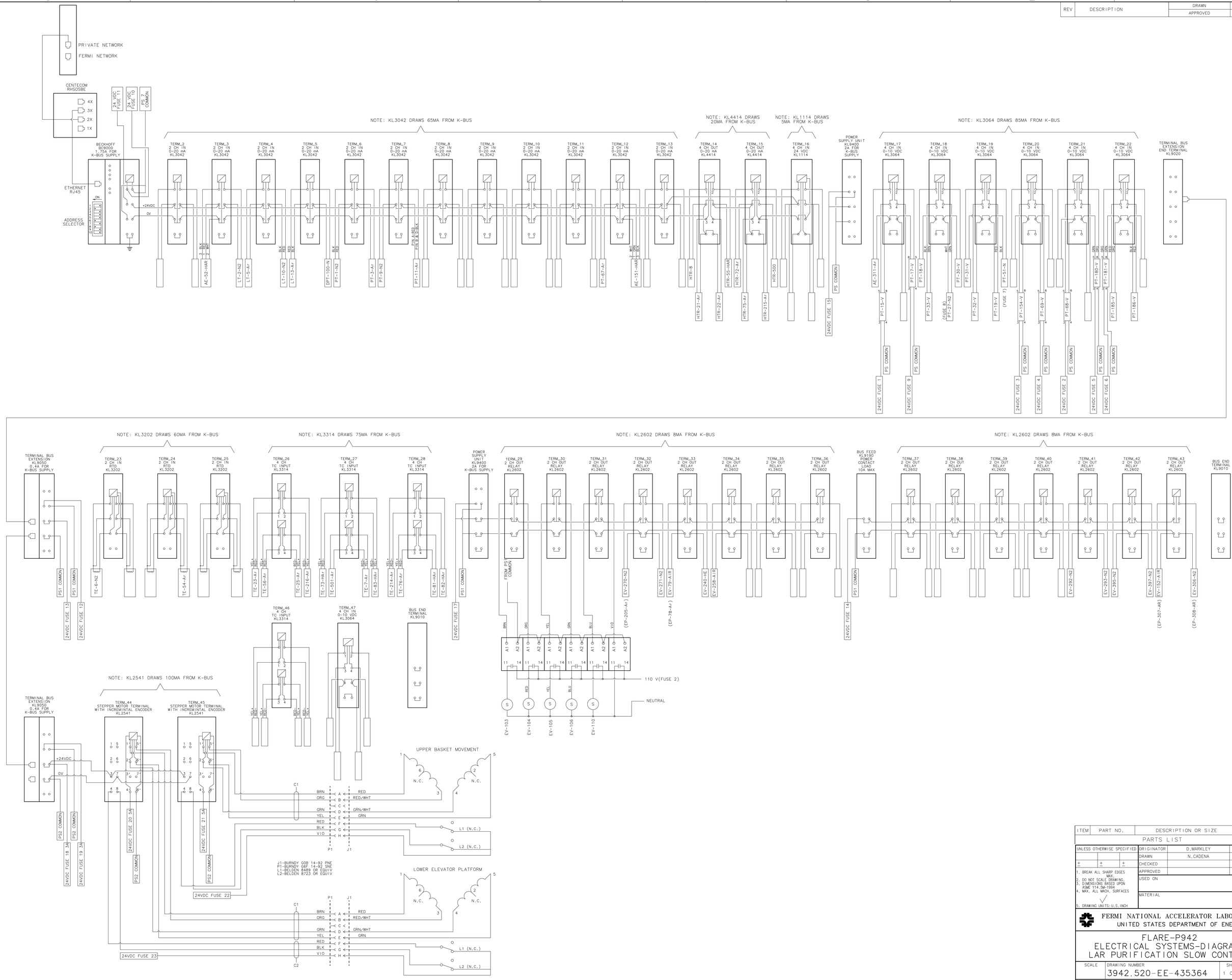


| ITEM | PART NO. | DESCRIPTION OR SIZE | QTY. |
|---|---|---|---|
| PARTS LIST | | | |

| | | |
|---|---|---|
| UNLESS OTHERWISE SPECIFIED | ORIGINATOR D.MARKLEY | 15-MAY-2006 |
| | DRAWN N.CADENA | 15-MAY-2006 |
| ± ± ± | CHECKED | |
| 1. BREAK ALL SHARP EDGES MAX. | APPROVED | |
| 2. DO NOT SCALE DRAWING. 3. DIMENSIONS BASED UPON ASME Y14.5M-1994 4. MAX. ALL MACH. SURFACES | USED ON | |
| 5. DRAWING UNITS: U.S. INCH | MATERIAL | |

FERMI NATIONAL ACCELERATOR LABORATORY
UNITED STATES DEPARTMENT OF ENERGY

FLARE-P942
ELECTRICAL SYSTEMS-DIAGRAMS
LAR PURIFICATION SLOW CONTROL

| SCALE | DRAWING NUMBER | SHEET | REV |
|---|---|---|---|
| | 3942.520-EE-435364 | 1 OF 2 | |

CREATED WITH : Ideas12NXSeries GROUP: PPD/MECHANICAL DEPARTMENT

Created: 13:15:04 on 09-07-07 (D-M-Y) By: catalan State: 1-INITIAL

| REV | DESCRIPTION | DRAWN | DATE |
|---|---|---|---|
| | | APPROVED | DATE |

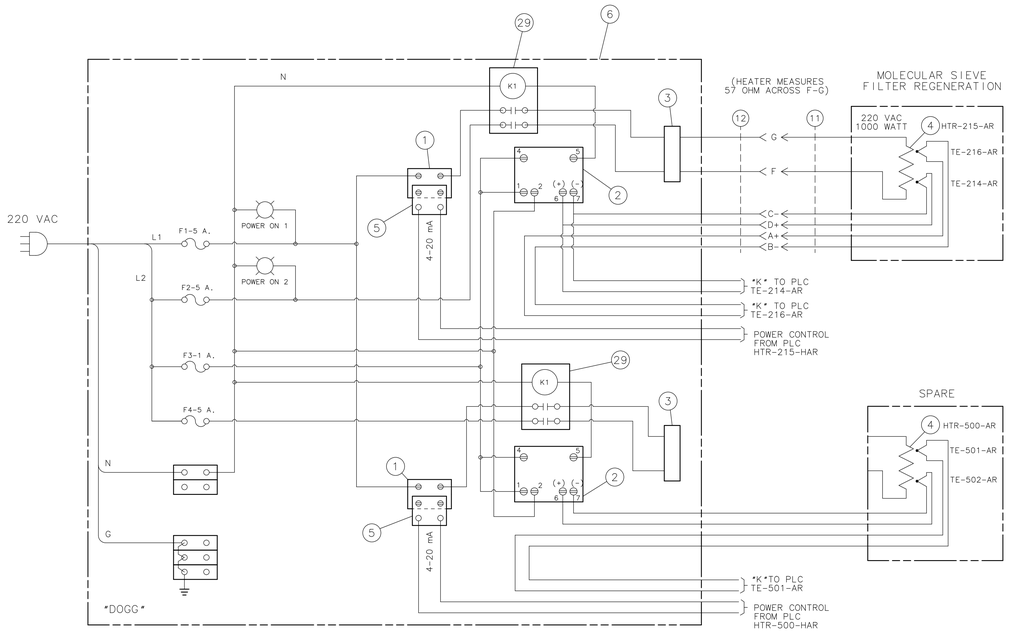


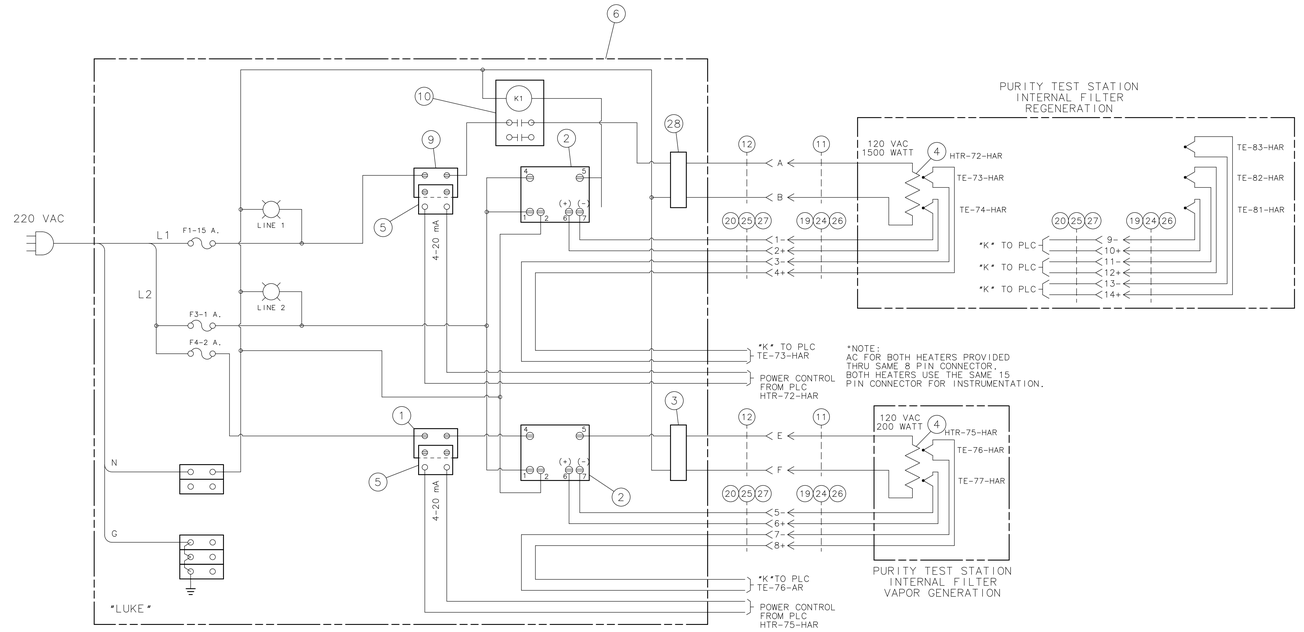


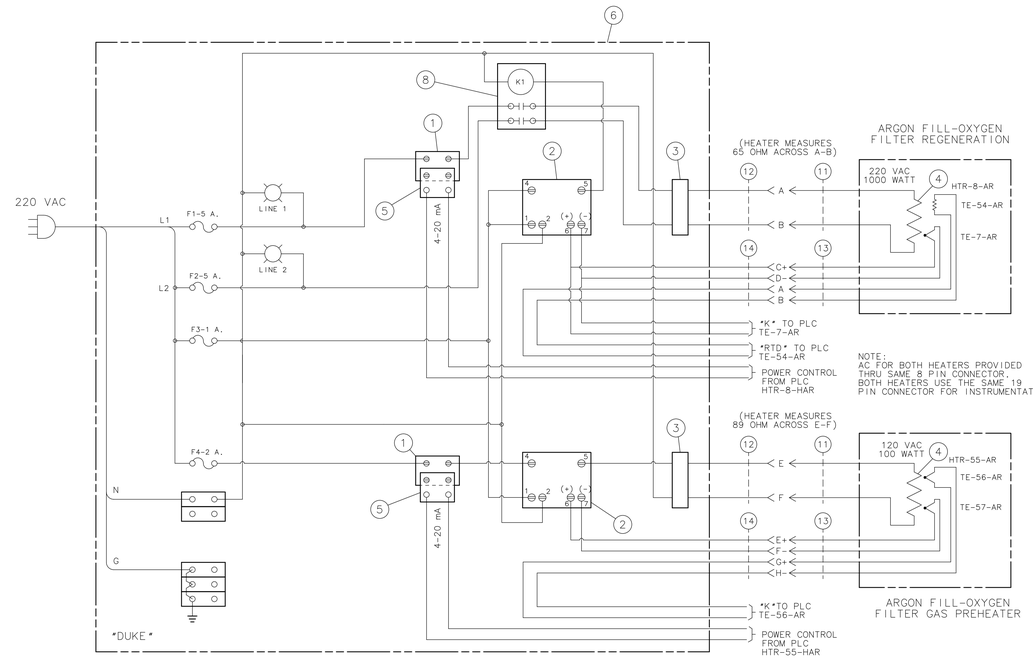


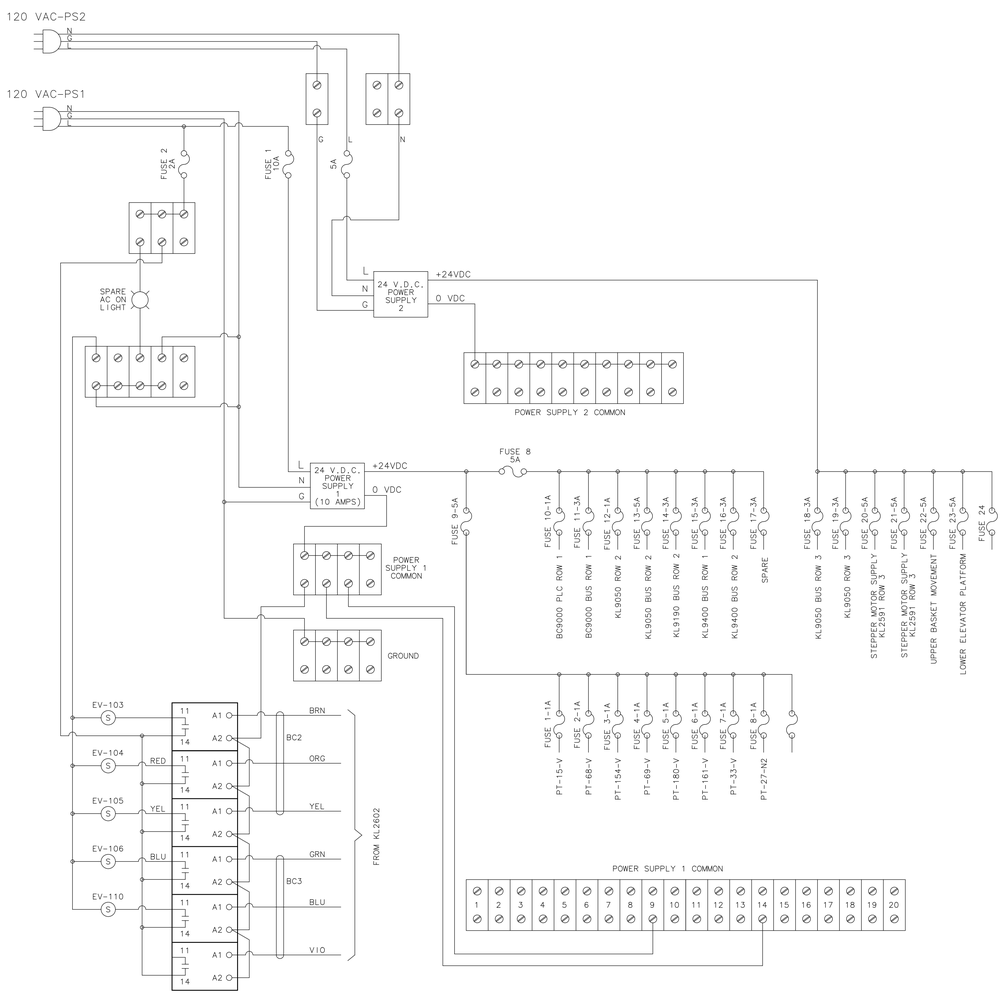


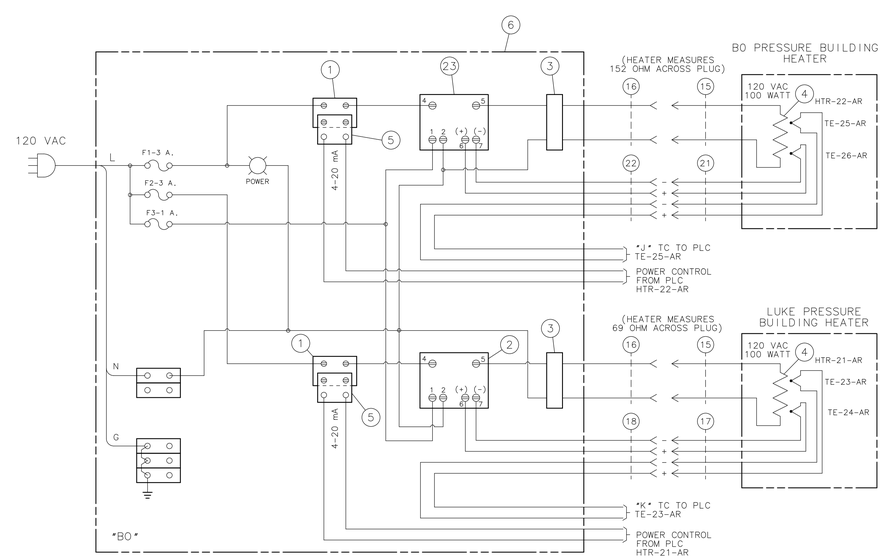


| | | | |
|---|---|---|---|
| 29 | COM'L | POTTER AND BRUMFIELD PRD-7AYO-120 | 2 |
| 28 | COM'L | RFI FILTER NEWARK P/N 52K4261 | 1 |
| 27 | COM'L | ALOMEGA MALE THERMOCOUPLE PINS OMEGA P/N SMTC-AL-P (-) | 6 |
| 26 | COM'L | ALOMEGA FEMALE THERMOCOUPLE PINS OMEGA P/N SMTC-AL-S (-) | 6 |
| 25 | COM'L | CHROMEGA MALE THERMOCOUPLE PINS OMEGA P/N SMTC-CH-P (+) | 6 |
| 24 | COM'L | CHROMEGA FEMALE THERMOCOUPLE PINS OMEGA P/N SMTC-CH-S (+) | 6 |
| 23 | COM'L | OMEGA LIMIT CONTROLLER P/N CN3261-JC | 1 |
| 22 | COM'L | MALE THERMOCOUPLE CONNECTOR OMEGA P/N OSTW-E-M | 2 |
| 21 | COM'L | THERMOCOUPLE SNAP IN PANEL JACK OMEGA P/N SPJ-E-F | 2 |
| 20 | COM'L | 15 PIN D CONNECTOR (MALE) OMEGA P/N SMTC-15MF | 1 |
| 19 | COM'L | 15 PIN D CONNECTOR (FEMALE) OMEGA P/N SMTC-15MF | 1 |
| 18 | COM'L | MALE THERMOCOUPLE CONNECTOR OMEGA P/N OSTW-K-M | 4 |
| 17 | COM'L | THERMOCOUPLE SNAP IN PANEL JACK OMEGA P/N SPJ-K-F | 4 |
| 16 | COM'L | TWIST-LOCK VALISE CONNECTOR BODY (FEMALE) P/N HBL 7593V | 2 |
| 15 | COM'L | TWIST-LOCK VALISE PLUG (MALE) P/N HBL 7594V | 1 |
| 14 | COM'L | 19 PIN CONNECTOR (FEMALE) AMPHENOL P/N MS3126F14-19S | 1 |
| 13 | COM'L | 19 PIN CONNECTOR (MALE) DETORONICS P/N DT02H-14-19PN | 1 |
| 12 | COM'L | 8 PIN CONNECTOR (FEMALE) AMPHENOL P/N MS3126F16-85 | 3 |
| 11 | COM'L | 8 PIN CONNECTOR (MALE) SEALTRON P/N 97814-8113-16-8P-SP-A3 | 3 |
| 10 | COM'L | MAGNETIC CONTACTOR OMEGA #MCI-2-30-120 | 1 |
| 9 | COM'L | SOLID STATE RELAY DC INPUT,25 A, AC OUTPUT OMEGA #SSR3300C10 | 1 |
| 8 | COM'L | MAGNETIC CONTACTOR OMEGA #MCI-2-30-240 | 3 |
| 7 | COM'L | OMEGA RTD ALARM LIMIT MODULE PART #DRG-AR-RTD | 0 |
| 6 | COM'L | HAMMOND ENCLOSURE 16"x16"x7" STOCK # 91F2192 | 4 |
| 5 | COM'L | OMEGA PCM1 MODULE | 8 |
| 4 | COM'L | WATLOW HEATER | 8 |
| 3 | COM'L | RFI FILTER-CII TECHNOLOGY NEWARK #81F4557 | 7 |
| 2 | COM'L | OMEGA LIMIT CONTROLLER #CN3261-KF | 7 |
| 1 | COM'L | SOLID STATE RELAY DC INPUT,10 A, AC OUTPUT OMEGA #SSR3300C10 | 7 |

| UNLESS OTHERWISE SPECIFIED | | | |
|---|---|---|---|
| ORIGINATOR | D.MARKLEY | 15-MAY-2006 | |
| DRAWN | N.CADENA | 15-MAY-2006 | |
| CHECKED | | | |
| APPROVED | | | |
| USED ON | | | |
| MATERIAL | | | |

± ± ±

1. BREAK ALL SHARP EDGES MAX.
2. DO NOT SCALE DRAWING.
3. DIMENSIONS BASED UPON
4. MAX. ALL MACH. SURFACES
5. DRAWING UNITS:

FERMI NATIONAL ACCELERATOR LABORATORY
UNITED STATES DEPARTMENT OF ENERGY

# FLARE-P942
# ELECTRICAL SYSTEMS-DIAGRAMS
# LAR PURIFICATION SLOW CONTROL

| SCALE | DRAWING NUMBER | SHEET | REV |
|---|---|---|---|
| | 3942.520-EE-435364 | 2 OF 2 | |

CREATED WITH : Ideas12NXSeries GROUP: PPD/MECHANICAL DEPARTMENT

## 2.1a – Procedure for Filling "Luke"

**All operators must meet the training requirements specified in section 2.3.**

**All steps of this procedure should be preformed while wearing eye protection. Cryogenic gloves and a face shield must be available in the immediate work area in case a leak must be addressed or a cold component handled.**

1. Start the argon purges. MV-316-Ar, MV-277-Ar, and the argon bottle isolation valve should be open. PCV-273-Ar outlet should be adjusted to 10 psig as indicated by PI-275-Ar. FI-278-Ar, FI-279-Ar, FI-280-Ar, FI-281-Ar, FI-282-Ar, FI-283-Ar, and FI-284-Ar should be set to 20 sccm. FI-315-Ar should be closed unless the material lock is being purged.

2. The cryostat must be evacuated. MV-244-Ar, MV-370-Ar, MV-241-Ar, MV-247-Ar, MV-248-Ar, MV-253-Ar, MV-254-V, MV-255-Ar, MV-360-V, and EP-205-Ar must all be closed. EP-308-Ar should be open.

3. Although the cryostat is rated for 15 psi external pressure, the insulating vacuum pressure should be checked on PT-68-V. The insulating vacuum should be less than 100 microns. If the insulating vacuum has spoiled, a vacuum pump should be connected to MV-261-V or CVI-138-V and improved before pumping out the cryostat. CVI-138-V does not have a spring, so it must be closed carefully when done pumping.

4. The rough pump on the cryostat pump cart should be started. A gauge read out should be connected to PE-288-V. When the vacuum is less than 100 microns, MV-360-V can be slowly opened to begin pumping out the cryostat. When PT-19-V indicates the cryostat pressure is below 1 Torr, the turbo pump may be started. The cryostat should be pumped on until the pressure reported by PT-33-V is less than $10^{-5}$ Torr.

5. The oxygen filter cryostat insulating vacuum should be checked on PT-154-V. If the vacuum is worse than 100 microns, a vacuum pump should be connected to CVI-289-V and the vacuum improved until its less than 100 microns. The purpose of this is to ensure the inner vessel is not evacuated with pressure in the insulating vacuum space.

6. The transfer line insulating vacuum should be checked on PT-15-V. If it is not less than 100 microns, then it should be pumped down. To do this, MV-224-V, MV-227-V, MV-228-V, EP-222-V, EP-155-V, MV-267-V, and EP-362-V should all be closed. The rough pump on the insulating vacuum pump cart should be started. When a readout connected to gauge tube PE-226-V indicates a vacuum less than 100 microns, EP-362-V should be opened. When the pressure reported by PE-226-V is less than 1 Torr, the turbo pump should be started. When the pressure reported by PT-15-V (or PE-234-V) is less than 10 microns, EP-362-V may be closed and the turbo pump turned off.

7. The molecular sieve insulating vacuum should be checked on PT-181-V. If the vacuum is worse than 100 microns, a vacuum pump should be connected to CVI-187-V and the vacuum improved until its less than 100 microns. The purpose of this is to ensure the inner vessel is not evacuated with pressure in the insulating vacuum space.

8. The inner vessel vacuum surrounding the molecular sieve should be checked on PT-180-V. If it is not less than 100 microns, the space should be pumped out. To do this, MV-224-V, MV-227-V, MV-228-V, EP-222-V, EP-362-V, and EP-155-V should all be closed. The rough pump on the insulating vacuum pump cart should be started. When the pressure reported by PE-226-V is less than 100 microns, EP-222-V should be opened. Once the pressure reported by PE-226-V is less than 1 Torr, the turbo pump should be started. The inner vessel should be pumped on until PT-180-V reads 10 microns or less.

Then EP-222-V should be closed. The turbo pump should then be turned off and allowed to spin down.

9. The piping between MV-213-Ar and MV-244-Ar must be pumped out before introducing argon. MV-213-Ar, MV-218-Ar, EP-222-V, MV-228-V, MV-227-V, MV-224-V, EP-362-V, MV-480-HAr, MV-461-HAr, MV-239-Ar, MV-244-Ar, MV-365-V, MV-267-V, and MV-366-V should all be closed. EP-155-V, MV-202-Ar (must be left open during assembly), MV-208-Ar, and MV-217-Ar should be open.

10. The rough pump on the insulating vacuum pump cart should be started. When a gauge readout connected to PE-226-V indicates a vacuum less than 100 microns, the LN2 cold trap should be filled.

11. MV-365-V and MV-366-V should be slowly opened. When PE-226-V indicates a vacuum of less than 1 Torr, the turbo pump should be turned on. The piping should be pumped on for at least 4 hours.

12. Close MV-365-V and MV-366-V. Turn off the turbo pump. Allow rough pump to run until LN2 trap is warm.

13. The argon filling manifold insulating vacuum should be checked using PE-225-V. If the vacuum is not less than 100 microns, a vacuum pump should be connected to CVI-207-V and the insulating space pumped until the vacuum is less than 100 microns. CVI-207-V should then be closed and the vacuum pump disconnected.

14. Empty liquid dewars should be removed using <u>2.1h – Procedure for Removing Stockroom Liquid Argon Dewars from the System.</u>

15. MV-213-Ar and MV-204-Ar should be verified as closed. Follow procedure <u>2.1g - Procedure for Connecting Stockroom Liquid Argon Dewars to the System</u> to connect four high pressure liquid argon dewars from the Fermilab stockroom to the manifold.

16. MV-360-V should be closed and the turbo pump on the cryostat pump cart turned off and allowed to spin down.

17. MV-204-Ar, MV-218-Ar, MV-480-HAr, MV-461-HAr, MV-365-V, MV-366-V, MV-239-Ar, MV-370-Ar, MV-241-Ar, MV-247-Ar, MV-248-Ar, MV-254-V, MV-255-Ar, EP-205-Ar, MV-253-Ar, and MV-244-Ar should be verified as closed.

18. MV-213-Ar, MV-217-Ar, and MV-208-Ar should be open.

19. Slowly open the liquid withdrawal isolation valve on one of the stock room dewars and charge the system with argon. Open the liquid withdrawal valve on the rest of the connected dewars.

20. Slowly open MV-239-Ar to allow argon to flow out the vent and cool down the transfer line. This should be done at least until TE-56-Ar reaches a stable minimum temperature.

21. Close MV-239-Ar.

22. Very slowly open MV-244-Ar and bring the cryostat to positive pressure as indicated by PI-12-Ar.

23. Once the cyrostat is at positive pressure and the pressure is slowly rising, fully open MV-255-Ar. EP-205-Ar may also be opened to increase vent flow.

24. Adjust MV-244-Ar to balance the flow such that the cryostat remains below 20 psig during the fill.

25. Liquid level will be indicated by LT-13-Ar. Fill the cryostat to the desired level, but not beyond 35 inches or 87%.

26. Close MV-244-Ar.

27. Turn on automatic pressure control at computer. Close MV-255-Ar. Computer will use HTR-21-Ar to build pressure, the LN2 condenser to reduce pressure, and if needed EP-205-Ar to vent excess pressure.

28. The high pressure stockroom dewars may remain open and connected to the system for future charging if desired.

**2.1b – Procedure for Emptying "Luke"**

**All operators must meet the training requirements specified in section 2.3.**

**All steps of this procedure should be preformed while wearing eye protection. Cryogenic gloves and a face shield must be available in the immediate work area in case a leak must be addressed or a cold component handled.**

1. MV-360-V, MV-244-Ar, MV-370-Ar, MV-241-Ar, MV-247-Ar, MV-248-Ar, MV-254-V, MV-255-Ar, MV-253-Ar, and EP-205-Ar should be closed. EP-308-Ar and EP-78-Ar should be open.

2. Turn on emptying control loop at computer which will turn off condenser. Open MV-370-Ar. Computer will use heater to maintain cryostat pressure at 15 psig to force liquid from cryostat.

3. Heater will turn off when it is no longer submerged in liquid. When heater is off, close MV-370-Ar to prevent contamination of cryostat.

4. Last bit of liquid at cryostat bottom below heater will slowly evaporate. EP-205-Ar will automatically vent remaining liquid as vapor.

**2.1c – Procedure for Operating "Air Lock" during Material Insertion**

**All operators must meet the training requirements specified in section 2.3.**

**All steps of this procedure should be preformed while wearing eye protection. Cryogenic gloves and a face shield must be available in the immediate work area in case a leak must be addressed or a cold component handled.**

1. Cryostat should be in a stable operating condition with the appropriate liquid argon level for the material test. MV-360-V, MV-244-Ar, MV-370-Ar, MV-241-Ar, MV-247-Ar, MV-248-Ar, MV-253-Ar, MV-254-V, and MV-255-Ar should all be closed under normal operating conditions.

2. The surface area of the material test sample must be measured. ***The surface area must be less than 162.5 square inches.*** Two people must measure the surface area independently. Their calculations and signatures must be entered into the material lock log book. Their signature indicates that they understand how to measure surface area and that they are responsible for the safety of the system during the insertion of the test sample.

3. Place sample into air lock basket and install 8 inch conflat flange to close the air lock.

4. The air lock must be purged with argon gas to remove the air contamination. MV-253-Ar, MV-296-Ar, MV-295-V, MV-300-Ar, and MV-310-Ar should be closed. MV-316-Ar, MV-277-Ar, MV-252-Ar, MV-290-Ar, MV-256-AR, MV-291-Ar, MV-294-Ar should be open.

5. FI-315-Ar should be adjusted to 8 SCFH.

6. MV-310-Ar should be opened and MV-300-Ar adjusted until FI-312-Ar indicates 2 SCFH.

7. Purge should continue until AE-311-Ar indicates an oxygen concentration below 1 ppm.

8. When purge has achieved desired oxygen level, close MV-290-Ar and MV-310-Ar.

9. Put computer into air lock open mode. This will lower the cryostat pressure to 1 psig. Allow the cryostat to reach a stable operating condition at this low pressure.

10. Open MV-254-V. Allow the cryostat to purge the airlock with boil off gas for 2 minutes.

11. Entered desired material depth for cryostat insertion into the computer. Computer will then slowly lower basket and material into cryostat. Computer will pause if pressure increases above 4 psig. Vapor generated by the warm material will continuously vent thru MV-256-AR.

12. Once desired depth is reached, computer will drop the basket and retreat.

13. Once the material basket has retreated above the vacuum gate valve as indicated by the computer, close MV-254-V and tell computer to resume normal cryostat pressure control.

**2.1d – Procedure for Operating "Air Lock" during material removal**

**All operators must meet the training requirements specified in section 2.3.**

**All steps of this procedure should be preformed while wearing eye protection. Cryogenic gloves and a face shield must be available in the immediate work area in case a leak must be addressed or a cold component handled.**

1. Cryostat should be in a stable operating condition prior to material removal. MV-360-V, MV-244-Ar, MV-370-Ar, MV-241-Ar, MV-247-Ar, MV-248-Ar, MV-253-Ar, MV-254-V, and MV-255-Ar should all be closed under normal operating conditions.

2. The air lock must be purged with argon gas if it is wished for cyrostat purity to be maintained. MV-253-Ar, MV-296-Ar, MV-295-V, MV-300-Ar, and MV-310-Ar should be closed. MV-316-Ar, MV-277-Ar, MV-252-Ar, MV-290-Ar, MV-256-AR, MV-291-Ar, MV-294-Ar should be open.

3. FI-315-Ar should be adjusted to 8 SCFH.

4. MV-310-Ar should be opened and MV-300-Ar adjusted until FI-312-Ar indicates 2 SCFH.

5. Purge should continue until AE-311-Ar indicates an oxygen concentration below 1 ppm.

6. When purge has achieved desired oxygen level, close MV-290-Ar and MV-310-Ar.

7. Put computer into air lock open mode. This will lower the cryostat pressure to 1 psig. Allow the cryostat to reach a stable operating condition at this low pressure.

8. Open MV-254-V. Allow the cryostat to purge the airlock with boil off gas for 2 minutes.

9. Tell computer to return material test basket to home position.

10. Once material basket has retreated above the vacuum gate valve (as indicated by computer graphic), close MV-254-V and tell computer to resume normal cryostat pressure control.

11. Verify that MV-290-Ar is closed. Verify that MV-256-Ar and MV-294-Ar are open. Open Mv-296-Ar to vent any pressure inside the material lock. The eight inch conflat flange may now be removed to access and remove material in test basket. Use cryogenic gloves to remove material that is still cold.

**2.1e – Procedure for filling the LN2 dewar**

**All operators must meet the training requirements specified in section 2.3.**

**All steps of this procedure should be preformed while wearing a face shield and cryogenic gloves.**

1. Remove the inlet cover on the fill connection and connect the tanker transfer hose.

2. Open the blow-down valve, MV-93-N, to maintain the dewar pressure at 30 psig.

3. Open the bottom fill valve MV-92-N.

4. Open the full trycock valve, MV-94-N.

5. Open the liquid discharge valve on the trailer to start filling the dewar.

6. Read the quantity gauge, DPI-100-N, during filling and observe the full trycock valve MV-94-N.

7. Close the liquid discharge valve on the trailer when the quantity gauge DPI-100-N reads 65 inches or when liquid discharges from the full trycock valve MV-94-N.

8. Close the bottom fill valve, MV-92-N.

9. Close the dewar blow down valve MV-93-N.

10. Vent the contents of the fill line using MV-91-N.

11. Disconnect the transfer hose.

12. Replace the inlet cover on the fill connection.

**2.1f – Normal Nitrogen Circuit Valve Positions During Operation**

**All operators must meet the training requirements specified in section 2.3.**

1. Valves that are closed during normal operation: MV-91-N, MV-92-N, MV-90-V, MV-94-N, MV-91-V, MV-86-N, MV-95-N, MV-107-N, MV-97-N, MV-119-N, MV-101-N, MV-99-N, and MV-93-N.

2. Valves that are open during normal operation: MV-90-N, MV-89-N, MV-88-N, MV-96-N, MV-100-N, MV-120-N, MV-87-N, MV-85-N, and MV-80-N.

**2.1g – Procedure for Connecting Stockroom Liquid Argon Dewars to the System**

**All operators must meet the training requirements specified in section 2.3.**

**All steps of this procedure should be preformed while wearing eye protection. Cryogenic gloves and a face shield must be available in the immediate work area in case a leak must be addressed or a cold component handled.**

1. Verify that the dewar label indicates the contents are liquid argon. Connecting a liquid nitrogen dewar to the system will cause a violent reaction with any liquid argon in the system as the nitrogen will freeze the argon. Also verify that the dewar contains liquid by looking at the liquid level gauge.

2. Using the metallic green and black Valley Craft brand lifting cart, move the liquid argon dewar from outside PAB into an open spot by one of the four flexible hoses that extend from the liquid argon manifold.

3. Close MV-213-Ar. The argon manifold must be isolated from the rest of the system anytime a dewar is added to the system to prevent contamination.

4. Connect the flexible stainless steel pigtail to the liquid withdrawal port on the dewar. The stainless steel pigtail has a VCR to flare adaptor to mate with the dewar liquid withdrawal port. A new copper gasket should be used with the flare fitting each time the connection is made up.

5. Repeat steps 1-4 to connect up to four dewars to the manifold.

6. Any pigtail not in use should be plugged by removing the VCR to flare adaptor and plugging the VCR fitting.

7. Anytime a dewar is connected to the manifold, the connection must be helium leak checked. A helium leak detector should be connected to MV-204-Ar. MV-204-Ar should be opened and the flare fitting at the liquid withdrawal port and the isolation valve supplied on the dewar should be sprayed externally with helium gas. Once the system is reasonably leak tight, MV-204-Ar should be closed and the leak detector disconnected.

8. The liquid withdrawal isolation valve supplied on each dewar should be opened to pressurize the manifold.

**2.1h – Procedure for Removing Stockroom Liquid Argon Dewars from the System**

**All operators must meet the training requirements specified in section 2.3.**

**All steps of this procedure should be preformed while wearing eye protection. Cryogenic gloves and a face shield must be available in the immediate work area in case a leak must be addressed or a cold component handled.**

1. Close MV-213-Ar. The argon manifold must be isolated from the rest of the system anytime a dewar is removed from the system to prevent contamination of the upstream filters.

2. Close the liquid withdrawal port isolation valve on each liquid argon dewar connected to the system.

3. Slowly open MV-204-Ar to vent any pressure contained in the argon manifold.

4. When the pressure in the manifold has been vented, the flare connection at the liquid argon dewar may be disconnected. If a new dewar is not being attached, the stainless steel pigtail should be plugged by removing the VCR to flare adaptor and plugging the VCR fitting.

5. MV-204-Ar should be closed after the desired dewars are disconnected.

6. Empty dewars should be removed from the PAB highbay using the metallic green and black Valley Craft brand lifting cart and placed outside by the gas shed. The full/empty tag should be flipped so that the empty side faces upward.

## 2.1i – Procedure for Molecular Sieve Regeneration

**All operators must meet the training requirements specified in section 2.3.**

1. MV-213-Ar, MV-218-Ar, and MV-217-Ar should be closed.

2. The molecular sieve insulating vacuum should be checked on PT-181-V. If the vacuum is worse than 100 microns, a vacuum pump should be connected to CVI-187-V and the vacuum improved until its less than 100 microns. The purpose of this is to ensure the inner vessel is not evacuated with pressure in the insulating vacuum space.

3. The inner vessel vacuum surrounding the molecular sieve should be checked on PT-180-V. If it is not less than 100 microns, the space should be pumped out. To do this, MV-224-V, MV-227-V, MV-228-V, EP-222-V, EP-362-V, and EP-155-V should all be closed. The rough pump on the insulating vacuum pump cart should be started. When the pressure reported by PE-226-V is less than 100 microns, EP-222-V should be opened. Once the pressure reported by PE-226-V is less than 1 Torr, the turbo pump should be started. The inner vessel should be pumped on until PT-180-V reads 10 microns or less. Then EP-222-V should be closed. The turbo pump should then be turned off and allowed to spin down.

4. A vacuum pump should be connected to MV-218-Ar with a cold trap between the pump and MV-218-Ar.

5. Once the vacuum is below 1 Torr as indicated by a vacuum gauge at the pump, the cold trap can be filled.

6. MV-218-Ar should be slowly opened. Avoid sending a surge of high pressure argon gas to the vacuum pump.

7. Once the gauge at the pump reads less than 10 Torr, turn on the heater in iFix. Set point should be 275 $^{o}$C and duration 8 hours. Monitoring the vacuum gauge at the pump will give some idea of the regeneration progress as water is removed and the pressure drops.

8. After regeneration is complete, turn off the heater in iFix.

9. Close MV-218-Ar. Disconnect the vacuum pump.

## 2.1j – Procedure for O2 Filter Regeneration

**All operators must meet the training requirements specified in section 2.3.**

1. MV-217-Ar, MV-239-Ar, MV-244-Ar, MV-365-V, and MV-366-V must be closed.

2. MV-208-Ar, MV-480-HAr, and MV-461-HAr must be open. MV-202-Ar must also be open, although it is inaccessible when the vacuum jacket is closed and should be in the open position.

3. The oxygen filter cryostat insulating vacuum should be checked on PT-154-V. If the vacuum is worse than 100 microns, a vacuum pump should be connected to CVI-289-V and the vacuum improved until its less than 100 microns. The purpose of this is to ensure the inner vessel is not evacuated with pressure in the insulating vacuum space.

4. The transfer line insulating vacuum should be checked on PT-15-V. If it is not less than 100 microns, then it should be pumped down. To do this, MV-224-V, MV-227-V, MV-228-V, EP-222-V, EP-155-V, MV-267-V, and EP-362-V should all be closed. The rough pump on the insulating vacuum pump cart should be started. When a readout connected to gauge tube PE-226-V indicates a vacuum less than 100 microns, EP-362-V should be opened. When the pressure reported by PE-226-V is less than 1 Torr, the turbo pump should be started. When the pressure reported by PT-15-V (or PE-234-V) is less than 10 microns, EP-362-V may be closed and the turbo pump turned off.

5. From the regeneration station, supply a 5 SCFH flow of argon gas.

6. In iFix, turn on the oxygen filter regeneration heaters HTR-8-Ar and HTR-55-Ar. Make the set point for both heaters 270 $^{o}$C.

7. Once the temperatures reported by TE-56-Ar and TE-54-Ar are stable, supply the 5% $H_2$ – 95% Ar mixture from the regeneration station for 8 hours.

8. Turn off HTR-8-Ar and HTR-55-Ar in iFix.

9. Supply a flow of argon gas from the regeneration station for 15 minutes to purge the hydrogen from the system.

10. Close MV-461-HAr first and then close MV-480-HAr to isolate the filter with a positive internal pressure.

## 2.2 - Startup Check List for Filling the Material Test Station

1. Ensure the liquid nitrogen dewar has at least 5 inches of liquid in it as indicated by DPI-100-N. If not, request a fill from Air Products.

2. Check that the LN2 dewar vapor pressure is around 30 psig as indicated by PI-100-N and PT-51-N. If not, adjust RV-036-N or RV-090-N as needed.

3. Check that the Beckhoff PLC and the iFix GUI are operating properly.

4. Check that the argon purge cylinder has at least 250 psig left. If not, connect a new cylinder of argon gas.

5. Ensure that at least 3 full stockroom high pressure argon dewars are available to fill the cryostat.

6. Check the availability of shop air on PI-272-Air which should indicate at least 60 psig.

7. Check the log book to see if the molecular sieve and oxygen filter require regeneration. If so, regenerate per 2.1i and 2.1j.

**3.1 - FMEA**

| Type | Tag | Tag | Service | Failure or Error Mode | Hazard or Effect | Hazard Class | Remarks |
|---|---|---|---|---|---|---|---|
| **Analyzing elements** | | | | | | | |
| AE | 52 | HAr | Filter regeneration moisture monitoring (close to exhaust) | Incorrect reading | O2 filter regeneration may be incomplete | Safe | Operational problem |
| AE | 151 | HAr | Filter regeneration moisture monitoring (close to filter) | Incorrect reading | O2 filter regeneration may be incomplete | Safe | Operational problem |
| AE | 311 | Ar | Oxygen Analyzer | Incorrect reading | Air lock purge may be incomplete | Safe | Operational problem |
| **Check valves** | | | | | | | |
| CV | 90 | N | LN2 dewar fill line check valve | Fails open | LN2 from dewar could spill into parking lot | Safe | Operational problem if MV-92-N is left open |
| CV | 90 | N | LN2 dewar fill line check valve | Fails closed | LN2 dewar cannot be filled | Marginal | Potential trapped volume if PCV-70-N closes. Low probability of a check valve failing shut. Pressure in a trapped volume will increase the probability that a stuck check valve would open. PCV-70-N will only close when the dewar vapor pressure reaches MAWP which also has a low probability. Thus the creation of an unrelieved trapped volume is the product of two low probability events. |
| CV | 150 | Ar | LAr vent line | Fails open | Wind effects felt on exhaust | Safe | No hazard |
| CV | 150 | Ar | LAr vent line | Fails closed | Potential trapped volume | Marginal | Low probability of a check valve failing shut. Pressure in a trapped volume would increase the probability a stuck check valve would open. |
| CV | 100 | N | LN2 dewar liquid use line | Fails open | Potential for back flow into dewar | Safe | No likely source for flowing back into dewar |
| CV | 100 | N | LN2 dewar liquid use line | Fails closed | Potential trapped volume | Marginal | Operational problem. Fermilab designed and fabricated check valve has a small diameter hole thru the center of the teflon plug that would relieve a trapped volume. |
| CV | 257 | Ar | "Air lock" vent line backflow prevention | Fails open | Potential contamination | Safe | Operational problem, under vacuum contaminants could be pulled into air lock |
| CV | 257 | Ar | "Air lock" vent line backflow prevention | Fails closed | Purging not possible | Safe | Operational problem, materials lock cannot be purged with Gar |
| CV | 266 | N2 | Insulating vacuum bleed up check valve | Fails open | No hazard | Safe | |
| CV | 266 | N2 | Insulating vacuum bleed up check valve | Fails closed | GN2 source blocked | Safe | Operational problem, no GN2 to bleed up insulating vacuum with |
| **Pump out ports** | | | | | | | |
| CVI | 138 | V | Luke vacuum pumpout/relief | Fails open | Insulating vacuum spoiled | Safe | Operational problem, PSV-210-Ar can handle excess boil off |
| CVI | 138 | V | Luke vacuum pumpout/relief | Fails closed | No relief for insulating vacuum | Marginal | If the ASME coded inner vessel fails, vacuum space is not relieved. Relief is a CVI vacuum pump out with the spring removed. The space that holds the spring retaining clip in place has been epoxied shut so a spring cannot be put back into the pumpout. There is a very low probability of this pumpout failing shut because without the spring it works like a parallel plate relief. |
| CVI | 187 | V | Molecular sieve pbar dewar insulating vacuum pumpout/relief | Fails open | Insulating vacuum spoiled | Safe | Operational problem, poor insulation |
| CVI | 187 | V | Molecular sieve pbar dewar insulating vacuum pumpout/relief | Fails closed | Insulating vacuum isolated | Marginal | Operational problem, can't improve vacuum, no insulating vacuum relief if inner vessel fails. For liquid to reach the insulating vacuum space, both the LAr piping and the ASME inner vessel must fail which is extremely unlikely. CVI pumpout works like a relief valve in that the sealing surface is held shut by a spring. If pressure was built in the vacuum jacket, its a low probability that the CVI would stay shut. |
| CVI | 207 | V | Liquid argon source manifold insulating vacuum pumpout and relief | Fails open | Insulating vacuum spoiled | Safe | Operational problem, poor insulation, likely frost buildup |
| CVI | 207 | V | Liquid argon source manifold insulating vacuum pumpout and relief | Fails closed | Insulating vacuum isolated | Marginal | Operational problem, can't improve vacuum, no insulating vacuum relief if inner pipe fails. Low probability of CVI sticking shut as pressure builds because the pumpout works like a spring loaded relief valve. Vacuum jacket is 1.5" stainless steel tube that can withstand a substantial internal pressure. |
| CVI | 220 | V | Pbar molecular sieve dewar inner vessel pumpout/relief | Fails open | Insulating vacuum spoiled | Safe | Operational problem, poor insulation, likely frost buildup |
| CVI | 220 | V | Pbar molecular sieve dewar inner vessel pumpout/relief | Fails closed | Insulating vacuum isolated | Safe | Operational problem, can't improve vacuum, no insulating vacuum relief if inner pipe fails |
| | | | | | | | (PSV-211-Ar and RD-209-Ar also protect space protected by CVI-220-V |
| CVI | 259 | V | Luke LN2-LAr condenser insulating vacuum pumpout/relief | Fails open | Insulating vacuum spoiled | Safe | Operational problem, condenser performance degrades |
| CVI | 259 | V | Luke LN2-LAr condenser insulating vacuum pumpout/relief | Fails closed | Insulating vacuum isolated | Marginal | Operational problem, can't improve insulating vacuum, no insulating vacuum relief if inner pipe fails. There is a low probability of the high quality stainless steel inner piping failing. There is also a low probability of the CVI pumpout failing shut as pressure builds because it works like a spring loaded relief valve. |
| CVI | 260 | V | LN2 transfer line vacuum pumpout/relief near Luke | Fails open | Insulating vacuum spoiled | Safe | Operational problem, poor insulation, likely frost buildup |
| CVI | 260 | V | LN2 transfer line vacuum pumpout/relief near Luke | Fails closed | Insulating vacuum isolated | Safe | Operational problem, can access same vacuum volume using CVI-286-V |
| CVI | 285 | V | LN2 transfer line vacuum pumpout/relief dewar side | Fails open | Insulating vacuum spoiled | Safe | Operational problem, poor insulation, likely frost buildup |
| CVI | 285 | V | LN2 transfer line vacuum pumpout/relief dewar side | Fails closed | Insulating vacuum isolated | Marginal | Operational problem, can't improve vacuum, no insulating vacuum relief if inner pipe fails. There is a low probability of the high quality stainless steel inner piping failing. There is also a low probability of the CVI pumpout failing shut as pressure builds because it works like a spring loaded relief valve. The vacuum jacket is 1.5" SCH 10 SS which can withstand a substantial internal pressure. |
| CVI | 286 | V | LN2 transfer line vacuum pumpout/PAB side | Fails open | Insulating vacuum spoiled | Safe | Operational problem, poor insulation, likely frost buildup |
| CVI | 286 | V | LN2 transfer line vacuum pumpout/PAB side | Fails closed | Insulating vacuum isolated | Safe | Operational problem, can access same vacuum volume using CVI-260-V |

**Differential pressure transmitters**

| | | | | | | | |
|---|---|---|---|---|---|---|---|
| DPT | 67 | Ar | Luke Vapor Pump filter liquid level | Incorrect reading | Possible poor pump performance | Safe | Operational problem |
| DPT | 100 | N | Liquid Nitrogen Dewar | Incorrect reading | Dewar liquid level unknown | Safe | Operational problem |
| DPT | 153 | Ar | Luke Vapor Pump filter shield liquid level | Incorrect reading | Possible poor pump performance | Safe | Operational problem |

**Pneumatic valves**

| | | | | | | | |
|---|---|---|---|---|---|---|---|
| EP | 78 | Ar | Luke Vapor pump filter insulation equalization | Fails open | Filter can't be isolated from cryostat | Safe | Operational problem - filter regeneration not possible |
| EP | 78 | Ar | Luke Vapor pump filter insulation equalization | Fails closed | Liquid can't be forced from insulating space | Safe | Operational problem - poor filtration |
| EP | 155 | V | Oxygen filter vacuum isolation | Fails open | Insulating vacuum spoiled | Safe | Operational problem - high thermal load during filtration or regeneration |
| EP | 155 | V | Oxygen filter vacuum isolation | Fails closed | Insulating vacuum isolated | Safe | Operational problem - can't improve vacuum |
| EP | 205 | Ar | Luke Ar vent | Fails open | Cryostat cannot build pressure | Safe | Operational problem - Gar will be vented and system will no longer be closed |
| EP | 205 | Ar | Luke Ar vent | Fails closed | Excess pressure not vented | Safe | Operational problem - Gar will be vented thru PSV-210-Ar if needed |
| EP | 222 | V | Molecular sieve insulating vacuum isolation | Fails open | Insulating vacuum spoiled | Safe | Operational problem - high thermal load during filtration or regeneration |
| EP | 222 | V | Molecular sieve insulating vacuum isolation | Fails closed | Insulating vacuum isolated | Safe | Operational problem - can't improve vacuum |
| EP | 236 | V | Cryostat pump cart inter-stage isolation (turbo protection) | Fails open | Turbo not protected | Safe | Operational problem - turbo vacuum pump could be damaged |
| EP | 236 | V | Cryostat pump cart inter-stage isolation (turbo protection) | Fails closed | Turbo isolated from rougher | Safe | Operational problem - cryostat cannot be effectively evacuated |
| EP | 307 | Ar | Luke vapor pump equalization valve | Fails open | Liquid cannot be forced from filter | Safe | Operational problem - poor filtration |
| EP | 307 | Ar | Luke vapor pump equalization valve | Fails closed | Liquid won't flow into filter | Safe | Operational problem - poor filtration |
| EP | 308 | Ar | Luke vapor pump liquid inlet | Fails open | Filter cannot be regenerated | Safe | Operational problem - poor filtration |
| EP | 308 | Ar | Luke vapor pump liquid inlet | Fails closed | LAr cannot enter filter | Safe | Operational problem - poor filtration |
| EP | 362 | V | LAr transfer line insulating vacuum isolation | Fails open | Insulating vacuum spoiled | Safe | Operational problem - high thermal load during LAr transfer |
| EP | 362 | V | LAr transfer line insulating vacuum isolation | Fails closed | Insulating vacuum isolated | Safe | Operational problem - can't improve vacuum |

**Electric valves**

| | | | | | | | |
|---|---|---|---|---|---|---|---|
| EV | 79 | Air | EP-78-Ar actuation | Fails open | Filter can't be isolated from cryostat | Safe | Operational problem - filter regeneration not possible |
| EV | 79 | Air | EP-78-Ar actuation | Fails closed | Liquid can't be forced from insulating space | Safe | Operational problem - poor filtration |
| EV | 105 | N2 | LN2 transfer line into Luke condenser | Fails open | GAr will not be condensed | Safe | Operational problem - GAr will vent thru EP-205-Ar or PSV-210-Ar |
| EV | 105 | N2 | LN2 transfer line into Luke condenser | Fails closed | Luke will not maintain positive pressure | Safe | Operational problem - LN2 will vent thru vaporizer |
| EV | 106 | N2 | LN2 transfer line vent | Fails open | Transfer line cannot pre-cool | Safe | Operational problem - condenser performance could degrade |
| EV | 106 | N2 | LN2 transfer line vent | Fails closed | LN2 will be wasted | Safe | Operational problem - LN2 will vent thru vaporizer |
| EV | 152 | Air | EP-307-Ar actuation | Fails open | Liquid cannot be forced from filter | Safe | Operational problem - poor filtration |
| EV | 152 | Air | EP-307-Ar actuation | Fails closed | Liquid won't flow into filter | Safe | Operational problem - poor filtration |
| EV | 223 | Air | EP-222-V actuation | Fails open | Insulating vacuum spoiled | Safe | Operational problem - high thermal load during filtration or regeneration |
| EV | 223 | Air | EP-222-V actuation | Fails closed | Insulating vacuum isolated | Safe | Operational problem - can't improve vacuum |
| EV | 232 | V | EP-155-V actuation | Fails open | Insulating vacuum spoiled | Safe | Operational problem - high thermal load during filtration or regeneration |
| EV | 232 | V | EP-155-V actuation | Fails closed | Insulating vacuum isolated | Safe | Operational problem - can't improve vacuum |
| EV | 233 | Air | EP-362-V actuation | Fails open | Insulating vacuum spoiled | Safe | Operational problem - high thermal load during LAr transfer |
| EV | 233 | Air | EP-362-V actuation | Fails closed | Insulating vacuum isolated | Safe | Operational problem - can't improve vacuum |
| EV | 240 | He | Luke vapor pump cold valve actuation (EP-308-Ar) | Fails open (GHe) | LAr cannot enter filter | Safe | Operational problem - poor filtration |
| EV | 240 | He | Luke vapor pump cold valve actuation (EP-308-Ar) | Fails closed (Vac) | Filter cannot be regenerated | Safe | Operational problem - poor filtration |
| EV | 258 | Air | Material basket catch/release mechanism actuation | Fails open | Material basket cannot be released | Safe | Operational problem - poor filtration |
| EV | 258 | Air | Material basket catch/release mechanism actuation | Fails closed | Material basket cannot be released | Safe | Operational problem - poor filtration |
| EV | 270 | N2 | EP-205-Ar actuation | Fails open | Cryostat cannot build pressure | Safe | Operational problem - Gar will be vented and system will no longer be closed |
| EV | 270 | N2 | EP-205-Ar actuation | Fails closed | Excess pressure not vented | Safe | Operational problem - Gar will be vented thru PSV-210-Ar if needed |
| EV | 287 | V | EP-236V actuation | Fails open | Turbo isolated from rougher | Safe | Operational problem - cryostat cannot be effectively evacuated |
| EV | 287 | V | EP-236V actuation | Fails closed | Turbo not protected | Safe | Operational problem - turbo vacuum pump could be damaged |

**Flowmeters**

| | | | | | | | |
|---|---|---|---|---|---|---|---|
| FI | 278 | Ar | Luke vapor pump trapped volume relief (PSV-156-Ar) | Manual valve fails closed | No GAr purge flow | Safe | Operational problem - possible oxygen diffusion into clean LAr spaces |
| FI | 278 | Ar | Luke vapor pump trapped volume relief (PSV-156-Ar) | Incorrect reading | Too little or too much purge flow | Safe | Operational problem - possible oxygen diffusion into clean LAr spaces |
| FI | 279 | Ar | Luke vapor pump electronic purge | Manual valve fails closed | No GAr purge flow | Safe | Operational problem - possible oxygen diffusion into clean LAr spaces |
| FI | 279 | Ar | Luke vapor pump electronic purge | Incorrect reading | Too little or too much purge flow | Safe | Operational problem - possible oxygen diffusion into clean LAr spaces |
| FI | 280 | Ar | Luke ASME relief purge (PSV-210-Ar) | Manual valve fails closed | No GAr purge flow | Safe | Operational problem - possible oxygen diffusion into clean LAr spaces |
| FI | 280 | Ar | Luke ASME relief purge (PSV-210-Ar) | Incorrect reading | Too little or too much purge flow | Safe | Operational problem - possible oxygen diffusion into clean LAr spaces |
| FI | 281 | Ar | Molecular sieve trapped volume relief purge (PSV-219-Ar) | Manual valve fails closed | No GAr purge flow | Safe | Operational problem - possible oxygen diffusion into clean LAr spaces |
| FI | 281 | Ar | Molecular sieve trapped volume relief purge (PSV-219-Ar) | Incorrect reading | Too little or too much purge flow | Safe | Operational problem - possible oxygen diffusion into clean LAr spaces |
| FI | 282 | Ar | O2 filter inlet side trapped volume relief (PSV-249-Ar) | Manual valve fails closed | No GAr purge flow | Safe | Operational problem - possible oxygen diffusion into clean LAr spaces |
| FI | 282 | Ar | O2 filter inlet side trapped volume relief (PSV-249-Ar) | Incorrect reading | Too little or too much purge flow | Safe | Operational problem - possible oxygen diffusion into clean LAr spaces |
| FI | 283 | Ar | O2 filter outlet side trapped volume relief (PSV-250-Ar) | Manual valve fails closed | No GAr purge flow | Safe | Operational problem - possible oxygen diffusion into clean LAr spaces |
| FI | 283 | Ar | O2 filter outlet side trapped volume relief (PSV-250-Ar) | Incorrect reading | Too little or too much purge flow | Safe | Operational problem - possible oxygen diffusion into clean LAr spaces |
| FI | 284 | Ar | Material lock release mechanism argon purge | Manual valve fails closed | No GAr purge flow | Safe | Operational problem - possible oxygen diffusion into clean LAr spaces |
| FI | 284 | Ar | Material lock release mechanism argon purge | Incorrect reading | Too little or too much purge flow | Safe | Operational problem - possible oxygen diffusion into clean LAr spaces |

| | | | | | | | |
|---|---|---|---|---|---|---|---|
| FI | 312 | Ar | Oxygen analyzer flow indicator | Incorrect reading | Too little or too much purge flow | Safe | Operational problem - oxygen analyzer may report incorrect concentration |
| FI | 315 | Ar | Air lock argon purge | Manual valve fails closed | No GAr purge flow to air lock | Safe | Operational problem - can't remove contamination from air lock |
| FI | 315 | Ar | Air lock argon purge | Incorrect reading | Too little or too much purge flow | Safe | Operational problem - purge may be slower than expected |

**Flow restricting orifices**

| | | | | | | | |
|---|---|---|---|---|---|---|---|
| FO | 212 | Ar | Liquid argon source manifold argon flow restriction | It is not reasonable for a 0.122 in. dia orifice to plug up | | | |

**Heating elements**

| | | | | | | | |
|---|---|---|---|---|---|---|---|
| HTR | 8 | HAr | Oxygen filter regeneration heater | OFF | Oxygen filter cannot be regenerated | Safe | Operational problem - poor filtration |
| | | | | ON | Oxygen filter overheats | Safe | Hardwired thermocouple interlock cuts heater power |
| | | | | ON | LAr vaporized | Safe | PSV-249-Ar has enough capacity for LAr vaporization rate |
| HTR | 21 | Ar | Vapor pressure building heater | OFF | Can't build vapor pressure | Safe | Operational problem |
| | | | | ON | Excess vapor pressure | Safe | PSV-210-Ar has enough capacity for LAr vaporization rate |
| | | | | ON | Overheating | Safe | Hardwired thermocouple interlock cuts heater power |
| HTR | 55 | HAr | Oxygen filter gas pre-heater | OFF | No oxygen filter gas preheat | Safe | Operational problem - poor filter regeneration |
| | | | | ON | Oxygen filter overheats | Safe | Hardwired thermocouple interlock cuts heater power |
| | | | | ON | LAr vaporized | Safe | PSV-249-Ar has enough capacity for LAr vaporization rate |
| HTR | 72 | HAr | Luke vapor pump filter regeneration heater | OFF | Oxygen filter cannot be regenerated | Safe | Operational problem - poor filtration |
| | | | | ON | Oxygen filter overheats | Safe | Hardwired thermocouple interlock cuts heater power |
| | | | | ON | LAr vaporized | Safe | Both PSV-156-Ar and PSV-210-Ar each have enough capacity for LAr vaporization rate |
| HTR | 75 | Ar | Luke vapor pump cup heater | OFF | LAr not pushed out of filter | Safe | Operational problem - poor filtration |
| | | | | ON | Vapor generation cup overheats | Safe | Hardwired thermocouple interlock cuts heater power |
| | | | | ON | LAr vaporized | Safe | Both PSV-156-Ar and PSV-210-Ar each have enough capacity for LAr vaporization rate |
| HTR | 215 | Ar | Molecular sieve regeneration heater | OFF | Molecular sieve cannot be regenerated | Safe | Operational problem - poor filtration |
| | | | | ON | Molecular sieve overheats | Safe | Hardwired thermocouple interlock cuts heater power |
| | | | | ON | LAr vaporized | Safe | PSV-219-Ar has enough capacity for LAr vaporization rate |

**Liquid level transmitters**

| | | | | | | | |
|---|---|---|---|---|---|---|---|
| LT | 10 | N2 | Luke condenser LN2 level | Incorrect reading | GAr condenser control difficult | Safe | Operational problem - poor GAr vapor space pressure control |
| LT | 13 | Ar | Luke cryostat LAr level | Incorrect reading | Unknown quantity of LAr in cryostat | Safe | PSV-210-Ar can handle over filling of cryostat |

**Manual valves**

| | | | | | | | |
|---|---|---|---|---|---|---|---|
| MV | 80 | N | LN2 dewar pressure gauge isolation | Fails open | Can't isolate PI-100-N | Safe | Operational problem - dewar must be blown down to fix instrumentation |
| MV | 80 | N | LN2 dewar pressure gauge isolation | Fails closed | PI-100-N is isolated | Safe | Operational problem - dewar vapor pressure not indicated, consult PT-51-N |
| MV | 85 | N | LN2 dewar vapor line pressure sensing isolation | Fails open | Can't isolate DPI-100-N | Safe | Operational problem - dewar must be blown down to fix instrumentation |
| MV | 85 | N | LN2 dewar vapor line pressure sensing isolation | Fails closed | DPI-100-N reads incorrectly | Safe | Operational problem - dewar liquid level not indicated properly |
| MV | 86 | N | LN2 dewar level gauge equalization | Fails open | | Safe | |
| MV | 86 | N | LN2 dewar level gauge equalization | Fails closed | DPI-100-N could be damaged | Safe | Operational problem - dewar liquid level gauge could be damaged |
| MV | 87 | N | LN2 dewar liquid line pressure sensing isolation | Fails open | Can't isolate DPI-100-N | Safe | Operational problem - dewar must be emptied to fix instrumentation |
| MV | 87 | N | LN2 dewar liquid line pressure sensing isolation | Fails closed | DPI-100-N reads incorrectly | Safe | Operational problem - dewar liquid level not indicated properly |
| MV | 88 | N | LN2 dewar pressure building regulator isolation | Fails open | Can't isolate pressure building regulator | Safe | MV-96-N, MV-95-N, and MV-89-N can still isolate pressure building loop |
| MV | 88 | N | LN2 dewar pressure building regulator isolation | Fails closed | Can't operate pressure building loop | Safe | Operational problem - dewar might not maintain adequate vapor pressure |
| MV | 89 | N | LN2 dewar pressure building loop isolation | Fails open | Can't isolate pressure building regulator | Safe | MV-96-N, MV-95-N, and MV-88-N can still isolate pressure building loop |
| MV | 89 | N | LN2 dewar pressure building loop isolation | Fails closed | Can't operate pressure building loop | Safe | Operational problem - dewar might not maintain adequate vapor pressure |
| MV | 90 | V | LN2 dewar vacuum pump out | Fails open | Insulating vacuum spoils | Safe | Operational problem - SV-100-N or SV-99-N can handle boil-off |
| MV | 90 | V | LN2 dewar vacuum pump out | Fails closed | Insulating vacuum can't be pumped on | Safe | Operational problem - dewar vacuum cannot be improved |
| MV | 90 | N | LN2 dewar pressure relieving regulator isolation | Fails open | RV-90-N can't be isolated | Safe | Operational problem - dewar must be blown down to service regulator |
| MV | 90 | N | LN2 dewar pressure relieving regulator isolation | Fails closed | RV-90-N can't vent excess pressure | Safe | SV-100-N or SV-99-N will safely vent excess vapor |
| MV | 91 | V | LN2 dewar vacuum readout isolation | Fails open | If PE-91-V leaks, insulating vacuum will spoil | Safe | Operational problem - SV-100-N or SV-99-N can handle boil-off |
| MV | 91 | V | LN2 dewar vacuum readout isolation | Fails closed | Inaccurate reading from PE-91-V | Safe | Operational problem - SV-100-N or SV-99-N can handle boil-off |
| MV | 91 | N | LN2 dewar fill line drain valve | Fails open | Large LN2 leak during fill | Safe | Operational problem - driver will not be able to fill LN2 dewar |
| MV | 91 | N | LN2 dewar fill line drain valve | Fails closed | Can't drain fill line | Safe | Excess pressure will vent thru SV-90-N |
| MV | 92 | N | LN2 dewar fill line isolation | Fails open | LN2 dewar drains into parking lot | Safe | Operational problem - dewar cannot be filled |
| MV | 92 | N | LN2 dewar fill line isolation | Fails closed | LN2 dewar cannot be filled | Safe | Operational problem - upstream components can handle tanker pump dead head pressure |
| MV | 93 | N | LN2 dewar vapor vent | Fails open | LN2 dewar blows down | Safe | Operational problem - no vapor pressure to transfer liquid |
| MV | 93 | N | LN2 dewar vapor vent | Fails closed | LN2 dewar can't be easily blown down | Safe | Operational problem - dewar will be hard to fill without blow down valve |
| MV | 94 | N | LN2 dewar full trycock | Fails open | LN2 dewar blows down | Safe | Operational problem - no vapor pressure to transfer liquid |
| MV | 94 | N | LN2 dewar full trycock | Fails closed | Difficult for tanker driver to determine when full | Safe | Operational problem - Driver can use DPI-100-N |

| | | | | | | | |
|---|---|---|---|---|---|---|---|
| MV | 95 | N | LN2 dewar pressure building loop bypass | Fails open | Excess vapor generation | Safe | SV-100-N or SV-99-N will safely vent excess vapor, closing MV-89-N stops vapor generation |
| MV | 95 | N | LN2 dewar pressure building loop bypass | Fails closed | No bypass for pressure building loop | Safe | Operational problem |
| MV | 96 | N | LN2 dewar pressure building regulator isolation | Fails open | Can't isolate pressure building regulator | Safe | Operational problem - closing MV-88-N or MV-89-N stops vapor generation |
| MV | 96 | N | LN2 dewar pressure building regulator isolation | Fails closed | Can't build vapor pressure | Safe | Operational problem - no vapor pressure to transfer liquid |
| MV | 97 | N | LN2 dewar liquid withdrawal | Fails open | LN2 dewar drains into parking lot | Safe | Operational problem |
| MV | 97 | N | LN2 dewar liquid withdrawal | Fails closed | Can't fill small hand dewars | Safe | Operational problem |
| MV | 98 | N | LN2 dewar relief valve selector | Fails open | Valve cannot fail open | Safe | Valve is open to either one side or the other of the relief "tree" such that it is always open |
| MV | 98 | N | LN2 dewar relief valve selector | Fails closed | One set of relief devices isolated | Safe | Operational problem - if valve sticks, can't switch between relief devices |
| MV | 99 | N | LN2 dewar vapor vent valve | Fails open | LN2 dewar blows down | Safe | Operational problem - no vapor pressure to transfer liquid |
| MV | 99 | N | LN2 dewar vapor vent valve | Fails closed | Can't vent pressure to service relief valve | Safe | Operational problem |
| MV | 100 | N | LN2 dewar liquid into PAB isolation | Fails open | Can't isolate PAB from LN2 dewar | Safe | MV-119-N and MV-120-N provide downstream isolation |
| MV | 100 | N | LN2 dewar liquid into PAB isolation | Fails closed | No LN2 flow into PAB | Safe | Operational problem |
| MV | 101 | N | LN2 dewar vapor vent valve | Fails open | LN2 dewar blows down | Safe | Operational problem - no vapor pressure to transfer liquid |
| MV | 101 | N | LN2 dewar vapor vent valve | Fails closed | Can't vent pressure to service relief valve | Safe | Operational problem |
| MV | 107 | N | LN2 dewar isolation for future gas use | Fails open | LN2 dewar drains into parking lot | Safe | Operational problem |
| MV | 107 | N | LN2 dewar isolation for future gas use | Fails closed | Normal position for current setup | Safe | Operational problem only if gas use is desired |
| MV | 119 | N | LN2 liquid transfer line branch isolation | Fails open | Can't isolate future LN2 branch | Safe | PSV-117-N2 @ 100 psig plugs LN2 branch supplied at a max of 75 psig |
| MV | 119 | N | LN2 liquid transfer line branch isolation | Fails closed | Normal position for current setup | Safe | Operational problem only if future LN2 expansion is required |
| MV | 120 | N | LN2 liquid transfer line Luke/Bo branch isolation | Fails open | Can't isolate LN2 supply to GAr condensers | Safe | EV-105-N2 and EV-106-N isolate LN2 flow downstream of MV-120-N |
| MV | 120 | N | LN2 liquid transfer line Luke/Bo branch isolation | Fails closed | No LN2 for GAr condensers | Safe | EP-205-Ar and PSV-210-Ar will vent cryostat boil-off |
| MV | 124 | Ar | Ar with O2 contamination source bottle regulator outlet isolation | Fails open | Can't isolate bottle regulator | Safe | Operational problem - can't isolate bottle regulator from vacuum pump |
| MV | 124 | Ar | Ar with O2 contamination source bottle regulator outlet isolation | Fails closed | No O2/Ar gas flow | Safe | Operational problem - can't perform contamination test |
| MV | 127 | Ar | Ar with O2 contamination source line regulator outlet isolation | Fails open | Can't isolate line regulator | Safe | Operational problem - can't isolate line regulator from vacuum pump |
| MV | 127 | Ar | Ar with O2 contamination source line regulator outlet isolation | Fails closed | No O2/Ar gas flow | Safe | Operational problem - can't perform contamination test |
| MV | 128 | Ar | Gas contamination introduction isolation | Fails open | No issue | Safe | MV-246-Ar provides a redundant function |
| MV | 128 | Ar | Gas contamination introduction isolation | Fails closed | No contamination gas flow | Safe | Operational problem - can't perform contamination test |
| MV | 131 | N2 | N2 contamination source regulator outlet isolation | Fails open | Can't isolate bottle regulator | Safe | Operational problem - can't isolate bottle regulator from vacuum pump |
| MV | 131 | N2 | N2 contamination source regulator outlet isolation | Fails closed | No N2/Ar gas flow | Safe | Operational problem - can't perform contamination test |
| MV | 132 | N2 | Contamination manifold vacuum isolation | Fails open | Can't isolate vacuum pump | Safe | Operational problem - contamination gas will be vented thru vacuum pump |
| MV | 132 | N2 | Contamination manifold vacuum isolation | Fails closed | Can't evacuate gas lines | Safe | Operational problem - gas lines must be evacuated for purity reasons |
| MV | 202 | Ar | Filter assembly inlet isolation | Fails open | Can't isolate filter | Safe | Operational problem - Only an issue if filter is removed from system and regenerated on a bench top |
| MV | 202 | Ar | Filter assembly inlet isolation | Fails closed | Potential trapped volume | Safe | Valve cannot be accessed from outside the vacuum jacket. It is a high quality all stainless steel valve that is unlikely to close. |
| MV | 204 | Ar | Liquid argon source manifold argon line isolation/pumpout | Fails open | LAr dumps onto floor | Safe | ODH analysis indicates this is acceptable and loud sound of high pressure liquid venting will cause those present to shut the valve |
| MV | 204 | Ar | Liquid argon source manifold argon line isolation/pumpout | Fails closed | Can't evacuate argon liquid line | Safe | Operational problem - contaminants will be left in argon liquid line |
| MV | 208 | Ar | Filter assembly outlet isolation | Fails open | Can't isolate filter | Safe | Operational problem - Only an issue if filter is removed from system and regenerated on a bench top |
| MV | 208 | Ar | Filter assembly outlet isolation | Fails closed | Potential trapped volume | Safe | To create trapped volume, MV-202-Ar must also be closed. MV-202-Ar cannot be accessed from outside the vacuum jacket. It is a high quality all stainless steel valve that is unlikely to close. |
| MV | 213 | Ar | Liquid argon source manifold isolation | Fails open | Can't isolate LAr source manifold | Safe | Operational problem - contamination may be introduced into system without proper isolation and evacuation |
| MV | 213 | Ar | Liquid argon source manifold isolation | Fails closed | Can't transfer LAr | Safe | Operational problem |
| MV | 217 | Ar | Molecular sieve isolation | Fails open | Can't isolate molecular sieve | Safe | Operational problem - regeneration and purity concerns |
| MV | 217 | Ar | Molecular sieve isolation | Fails closed | Can't transfer LAr | Safe | Operational problem - PSV-219-Ar relieves potential trapped volume |
| MV | 218 | Ar | Molecular sieve isolation/pumpout | Fails open | LAr dumps onto PAB floor | Safe | ODH analysis indicates this is acceptable and loud sound of high pressure liquid venting will cause those present to shut the valve |
| MV | 218 | Ar | Molecular sieve isolation/pumpout | Fails closed | Can't evacuate molecular sieve | Safe | Operational problem - regeneration and purity concerns |
| MV | 224 | V | Transfer line insulating vacuum pump cart roughing pump port isolation | Fails open | Can't evacuate transfer line | Safe | Operational problem - possible turbo pump damage if opened at wrong time |
| MV | 224 | V | Transfer line insulating vacuum pump cart roughing pump port isolation | Fails closed | Normal position | Safe | Operational problem - if another vacuum port is needed |
| MV | 227 | V | Insulating vacuum pump cart port isolation | Fails open | Can't evacuate transfer line | Safe | Operational problem - possible turbo pump damage if opened at wrong time |
| MV | 227 | V | Insulating vacuum pump cart port isolation | Fails closed | Normal position | Safe | Operational problem - if another vacuum port is needed |
| MV | 228 | V | Insulating vacuum pump cart port isolation | Fails open | Can't evacuate transfer line | Safe | Operational problem - possible turbo pump damage if opened at wrong time |
| MV | 228 | V | Insulating vacuum pump cart port isolation | Fails closed | Normal position | Safe | Operational problem - if another vacuum port is needed |
| MV | 229 | V | Cryostat pump cart port isolation | Fails open | Can't evacuate cryostat to high vacuum | Safe | Operational problem - possible turbo pump damage if opened at wrong time |
| MV | 229 | V | Cryostat pump cart port isolation | Fails closed | Can't evacuate cryostat | Safe | Operational problem - if another vacuum port is needed |
| MV | 237 | V | Seal monitor pump cart isolation | Fails open | Can't isolate vacuum pump | Safe | Operational problem |
| MV | 237 | V | Seal monitor pump cart isolation | Fails closed | Can't vacuum pump flange seal or air lock | Safe | Operational problem - purity difficult to obtain without this vacuum pump |

| | | | | | | | |
|---|---|---|---|---|---|---|---|
| MV | 239 | Ar | Liquid argon "dump" before Luke | Fails open | Can't fill cryostat | Safe | Operational problem - LAr vaporized and vented outside. |
| MV | 239 | Ar | Liquid argon "dump" before Luke | Fails closed | Can't dump initial flow thru filter | Safe | Operational problem - purity difficult to obtain without dumping initial flow thru filter |
| MV | 241 | Ar | Gas contamination introduction isolation | Fails open | No problem | Safe | MV-242-Ar performs the same function |
| MV | 241 | Ar | Gas contamination introduction isolation | Fails closed | Can't introduce gas samples | Safe | Operational problem |
| MV | 242 | Ar | Gas contamination introduction isolation | Fails open | No problem | Safe | MV-241-Ar performs the same function |
| MV | 242 | Ar | Gas contamination introduction isolation | Fails closed | Can't introduce gas samples | Safe | Operational problem |
| MV | 244 | Ar | Luke cryo isolation valve | Fails open | Can't isolate cryostat | Safe | Operational problem -filter warming up could release contaminants |
| MV | 244 | Ar | Luke cryo isolation valve | Fails closed | Can't fill cryostat | Safe | Operational problem - PSV-250-Ar relieves potential trapped volume |
| MV | 246 | Ar | Gas contamination introduction isolation | Fails open | Can't isolate sample bottle | Safe | Operational problem - need isolation to deliver a known volume |
| MV | 246 | Ar | Gas contamination introduction isolation | Fails closed | Can't introduce contaminants | Safe | Operational problem |
| MV | 247 | Ar | Luke vapor pump filter regeneration gas outlet isolation | Fails open | Filter is not isolated | Safe | Operational problem - could depressurize cryostat or introduce contamination |
| MV | 247 | Ar | Luke vapor pump filter regeneration gas outlet isolation | Fails closed | Filter regeneration not possible | Safe | Operational problem |
| MV | 248 | Ar | Luke vapor pump filter regeneration gas inlet isolation | Fails open | Filter is not isolated | Safe | Operational problem - could force liquid from cryostat or introduce contamination |
| MV | 248 | Ar | Luke vapor pump filter regeneration gas inlet isolation | Fails closed | Filter regeneration not possible | Safe | Operational problem |
| MV | 251 | V | "Air lock" vacuum isolation | Fails open | Air lock not isolated from turbo | Safe | Operational problem - can't use air lock |
| MV | 251 | V | "Air lock" vacuum isolation | Fails closed | Air lock evacuation not possible | Safe | Operational problem - contamination can't be removed from air lock |
| MV | 252 | Ar | "Air lock" argon bottle purge isolation | Fails open | Air lock is constantly purged | Safe | Operational problem |
| MV | 252 | Ar | "Air lock" argon bottle purge isolation | Fails closed | Air lock can't be purged with bottle gas | Safe | Operational problem - air lock can still be purged using cryostat gas |
| MV | 253 | Ar | "Air lock" cryostat vapor purge isolation | Fails open | Air lock is constantly purged | Safe | Operational problem |
| MV | 253 | Ar | "Air lock" cryostat vapor purge isolation | Fails closed | Air lock can't be purged with boil-off gas | Safe | Operational problem |
| MV | 254 | V | Luke materials test station air lock pass thru | Fails open | Air lock can't be isolated from cryostat | Safe | Operational problem - air lock must be isolated to remove contamination |
| MV | 254 | V | Luke materials test station air lock pass thru | Fails closed | Materials cannot be placed into cryostat | Safe | Operational problem |
| MV | 255 | Ar | Luke manual vapor vent | Fails open | Cryostat blows down | Safe | Operational problem |
| MV | 255 | Ar | Luke manual vapor vent | Fails closed | Can't manually vent cryostat | Safe | Operational problem - EP-205-Ar can vent vapor |
| MV | 256 | Ar | "Air lock" purge vent isolation | Fails open | Can't evacuate air lock | Safe | Operational problem - contamination not removed from air lock |
| MV | 256 | Ar | "Air lock" purge vent isolation | Fails closed | Can't purge air lock with Ar gas | Safe | Operational problem - contamination not removed from air lock |
| MV | 261 | V | Luke insulating vacuum isolation/pumpout | Fails open | Cryostat could loose insulating vacuum | Safe | Operational problem - PSV-210-Ar can handle boil-off |
| MV | 261 | V | Luke insulating vacuum isolation/pumpout | Fails closed | Can't vacuum pump insulating space | Safe | Operational problem - PSV-210-Ar can handle boil-off |
| MV | 265 | N2 | Bleed up cylinder regulator outlet isolation | Fails open | No hazard | Safe | Normal position |
| MV | 265 | N2 | Bleed up cylinder regulator outlet isolation | Fails closed | Can't use N2 gas | Safe | Operational problem - can't bleed up insulating vacuum with dry gas |
| MV | 267 | V | Transfer line insulating vacuum nitrogen bleed up isolation | Fails open | Insulating vacuum not isolated | Safe | Operational problem - MV-265-N2 also provides isolation |
| MV | 267 | V | Transfer line insulating vacuum nitrogen bleed up isolation | Fails closed | Can't use N2 gas | Safe | Operational problem - can't bleed up insulating vacuum with dry gas |
| MV | 268 | Air | Shop air isolation | Fails open | Shop air can't be isolated | Safe | Operational problem |
| MV | 268 | Air | Shop air isolation | Fails closed | Shop air not available for valve actuation | Safe | Operational problem - safety not dependent on actuated valves |
| MV | 277 | Ar | Argon purge regulator outlet isolation at flow meter panel | Fails open | No hazard | Safe | Normal position |
| MV | 277 | Ar | Argon purge regulator outlet isolation at flow meter panel | Fails closed | No Ar gas purge | Safe | Operational problem - O2 diffusion thru o-rings will contaminate cryostat |
| MV | 316 | Ar | Argon purge regulator outlet isolation at bottle | Fails open | No hazard | Safe | Normal position |
| MV | 316 | Ar | Argon purge regulator outlet isolation at bottle | Fails closed | No Ar gas purge | Safe | Operational problem - O2 diffusion thru o-rings will contaminate cryostat |
| MV | 360 | V | Luke vacuum pumpout isolation valve | Fails open | Can't isolate cryostat from turbo pump cart | Safe | Operational problem - cryostat could wreck turbo |
| MV | 360 | V | Luke vacuum pumpout isolation valve | Fails closed | Can't evacuate cryostat | Safe | Operational problem - cryostat must be evacuated to remove air contamination |
| MV | 365 | V | O2 filter vacuum isolation (downstream tap) | Fails open | Can't use O2 filter | Safe | Operational problem |
| MV | 365 | V | O2 filter vacuum isolation (downstream tap) | Fails closed | Can't evacuate filter from downstream side | Safe | Operational problem - may not be able to effectively remove contamination |
| MV | 366 | V | O2 filter vacuum isolation (upstream tap) | Fails open | Can't use O2 filter | Safe | Operational problem |
| MV | 366 | V | O2 filter vacuum isolation (upstream tap) | Fails closed | Can't evacuate filter from upstream side | Safe | Operational problem - may not be able to effectively remove contamination |
| MV | 370 | Ar | Luke drain valve | Fails open | Cryostat empties | Safe | Operational problem - LAr is vaporized and vents outside |
| MV | 370 | Ar | Luke drain valve | Fails closed | Can't drain liquid from cryostat | Safe | Operational problem - could use heaters to vaporize LAr |
| MV | 461 | HAr | O2 filter regeneration isolation (exhaust) | Fails open | | Safe | |
| MV | 461 | HAr | O2 filter regeneration isolation (exhaust) | Fails closed | Can't regenerate filter | Safe | Operational problem |
| MV | 480 | HAr | O2 filter regeneration isolation (inlet) | Fails open | | Safe | |
| MV | 480 | HAr | O2 filter regeneration isolation (inlet) | Fails closed | Can't regenerate filter | Safe | Operational problem |

**Pressure regulators and pressure control valves**

| | | | | | | | |
|---|---|---|---|---|---|---|---|
| PCV | 70 | N | Fill shut off valve | Fails open | LN2 dewar not protected from overfill | Marginal | LN2 dewar could be over pressurized during a fill if dewar relief valves are over powered by the tanker truck centrifugal pump. There is a very low probability of PCV-70-N failing to protect the dewar. It is a high quality valve with a TUV certificate. |
| PCV | 70 | N | Fill shut off valve | Fails closed | LN2 dewar cannot be filled | Safe | Operational problem - No LN2 to condense GAr |
| PCV | 121 | Ar | Ar with O2 contamination source bottle regulator | Fails open | Downstream components see bottle pressure | Safe | PSV-136-Ar protects downstream components |
| PCV | 121 | Ar | Ar with O2 contamination source bottle regulator | Fails closed | Contamination gas cannot flow | Safe | Operational problem |
| PCV | 125 | Ar | Ar with O2 contamination source line regulator | Fails open | No additional line pressure regulation | Safe | Operational problem |

| | | | | | | | |
|---|---|---|---|---|---|---|---|
| PCV | 125 | Ar | Ar with O2 contamination source line regulator | Fails closed | Contamination gas cannot flow | Safe | Operational problem |
| PCV | 129 | N2 | Nitrogen contamination source bottle regulator | Fails open | Downstream components see bottle pressure | Safe | PSV-136-Ar protects downstream components |
| PCV | 129 | N2 | Nitrogen contamination source bottle regulator | Fails closed | Contamination gas cannot flow | Safe | Operational problem |
| PCV | 262 | N2 | LAr transfer line insulating vacuum bleed up regulator | Fails open | Downstream components see bottle pressure | Safe | PSV-137-N2 protects downstream components |
| PCV | 262 | N2 | LAr transfer line insulating vacuum bleed up regulator | Fails closed | Bleed up gas cannot flow | Safe | Operational problem |
| PCV | 269 | Air | Shop air point of use regulator | Fails open | Shop air is unregulated | Safe | Operational problem |
| PCV | 269 | Air | Shop air point of use regulator | Fails closed | Shop air not available for valve actuation | Safe | Operational problem - safety not dependent on actuated valves |
| PCV | 273 | Ar | Argon purge bottle regulator | Fails open | Downstream components see bottle pressure | Safe | PSV-276-ar protects downstream components |
| PCV | 273 | Ar | Argon purge bottle regulator | Fails closed | Contamination gas cannot flow | Safe | Operational problem |

**Vacuum pressure elements**

| | | | | | | | |
|---|---|---|---|---|---|---|---|
| PE | 91 | V | LN2 dewar insulating vacuum | Incorrect reading -low | Insulating vacuum worse than indicated | Safe | Operational problem - SV-99-N or SV-100-N handles excess boil-off |
| PE | 91 | V | LN2 dewar insulating vacuum | Incorrect reading - high | Insulating vacuum better than indicated | Safe | Operational problem - time could be spent investigating a non-existent problem |
| PE | 225 | V | Liquid argon source manifold insulating vacuum | Incorrect reading -low | Insulating vacuum worse than indicated | Safe | Operational problem - larger liquid loss during LAr transfer |
| PE | 225 | V | Liquid argon source manifold insulating vacuum | Incorrect reading - high | Insulating vacuum better than indicated | Safe | Operational problem - time could be spent investigating a non-existent problem |
| PE | 226 | V | Insulating vacuum pump cart inter-stage pressure | Incorrect reading -low | Vacuum worse than indicated | Safe | Operational problem - may have trouble turning on turbo |
| PE | 226 | V | Insulating vacuum pump cart inter-stage pressure | Incorrect reading - high | Vacuum better than indicated | Safe | Operational problem - time could be spent investigating a non-existent problem |
| PE | 230 | V | Insulating vacuum pump cart pressure | Incorrect reading -low | Vacuum worse than indicated | Safe | Operational problem - redundant instrument with PE-231-V |
| PE | 230 | V | Insulating vacuum pump cart pressure | Incorrect reading - high | Vacuum better than indicated | Safe | Operational problem - time could be spent investigating a non-existent problem |
| PE | 231 | V | Insulating vacuum pump cart pressure | Incorrect reading -low | Vacuum worse than indicated | Safe | Operational problem - redundant instrument with PE-230-V |
| PE | 231 | V | Insulating vacuum pump cart pressure | Incorrect reading - high | Vacuum better than indicated | Safe | Operational problem - time could be spent investigating a non-existent problem |
| PE | 234 | V | Transfer line insulating vacuum pressure | Incorrect reading -low | Insulating vacuum worse than indicated | Safe | Operational problem - larger liquid loss during LAr transfer |
| PE | 234 | V | Transfer line insulating vacuum pressure | Incorrect reading - high | Vacuum better than indicated | Safe | Operational problem - time could be spent investigating a non-existent problem |
| PE | 235 | V | Oxygen filter insulating vacuum | Incorrect reading -low | Insulating vacuum worse than indicated | Safe | Operational problem - larger liquid loss during LAr transfer, PT-15-V provides another measurement of this vacuum |
| PE | 235 | V | Oxygen filter insulating vacuum | Incorrect reading - high | Vacuum better than indicated | Safe | Operational problem - time could be spent investigating a non-existent problem |
| PE | 238 | V | Seal monitor pump cart pressure | Incorrect reading -low | Seal vacuum worse than indicated | Safe | Operational problem - poor vacuum can lead to contamination, PT-69-V provides another measurement of this vacuum |
| PE | 238 | V | Seal monitor pump cart pressure | Incorrect reading - high | Vacuum better than indicated | Safe | Operational problem - time could be spent investigating a non-existent problem PT-69-V provides another measurement of this vacuum |
| PE | 288 | V | Cryostat pump cart vacuum pressure | Incorrect reading -low | Pump cart vacuum worse than indicated | Safe | Operational problem - PT-19-V and PT-33-V will indicate if vacuum is poor |
| PE | 288 | V | Cryostat pump cart vacuum pressure | Incorrect reading - high | Vacuum better than indicated | Safe | Operational problem - time could be spent investigating a non-existent problem |

**Pressure indicating gauges**

| | | | | | | | |
|---|---|---|---|---|---|---|---|
| PI | 12 | Ar | Luke cryostat Ar pressure | Incorrect reading -low | No hazard | Safe | Operational problem - PT-11-Ar provides redundant instrumentation |
| PI | 12 | Ar | Luke cryostat Ar pressure | Incorrect reading - high | No hazard | Safe | Operational problem - PT-11-Ar provides redundant instrumentation |
| PI | 44 | N2 | LN2 transfer line pressure | Incorrect reading -low | No hazard | Safe | Operational problem - PT-27-N2 provides redundant instrumentation |
| PI | 44 | N2 | LN2 transfer line pressure | Incorrect reading - high | No hazard | Safe | Operational problem - PT-27-N2 provides redundant instrumentation |
| PI | 100 | N | LN2 dewar pressure | Incorrect reading -low | No hazard | Safe | Operational problem - could make it difficult for tanker truck driver to match dewar pressure during fill, PT-51-N provides redundant instrumentation |
| PI | 100 | N | LN2 dewar pressure | Incorrect reading - high | No hazard | Safe | Operational problem - could make it difficult for tanker truck driver to match dewar pressure during fill, PT-51-N provides redundant instrumentation |
| PI | 122 | Ar | Ar with O2 contamination source bottle pressure | Incorrect reading -low | No hazard | Safe | Operational problem |
| PI | 122 | Ar | Ar with O2 contamination source bottle pressure | Incorrect reading - high | No hazard | Safe | Operational problem |
| PI | 123 | Ar | Ar with O2 contamination source regulated bottle pressure | Incorrect reading -low | No hazard | Safe | Operational problem |
| PI | 123 | Ar | Ar with O2 contamination source regulated bottle pressure | Incorrect reading - high | No hazard | Safe | Operational problem |
| PI | 126 | Ar | Ar with O2 contamination source regulated line pressure | Incorrect reading -low | No hazard | Safe | Operational problem |
| PI | 126 | Ar | Ar with O2 contamination source regulated line pressure | Incorrect reading - high | No hazard | Safe | Operational problem |
| PI | 130 | N2 | N2 contamination source bottle pressure | Incorrect reading -low | No hazard | Safe | Operational problem |
| PI | 130 | N2 | N2 contamination source bottle pressure | Incorrect reading - high | No hazard | Safe | Operational problem |
| PI | 133 | N2 | LN2 vent back pressure | Incorrect reading -low | No hazard | Safe | Operational problem - PT-1-N2 provides redundant instrumentation |
| PI | 133 | N2 | LN2 vent back pressure | Incorrect reading - high | No hazard | Safe | Operational problem - PT-1-N2 provides redundant instrumentation |
| PI | 243 | Ar | Gas contamination sample bottle isolation | Incorrect reading -low | No hazard | Safe | Operational problem |
| PI | 243 | Ar | Gas contamination sample bottle isolation | Incorrect reading - high | No hazard | Safe | Operational problem |
| PI | 263 | N2 | Bleed up cylinder bottle pressure | Incorrect reading -low | No hazard | Safe | Operational problem |
| PI | 263 | N2 | Bleed up cylinder bottle pressure | Incorrect reading - high | No hazard | Safe | Operational problem |
| PI | 264 | N2 | Bleed up cylinder regulated pressure | Incorrect reading -low | No hazard | Safe | Operational problem |
| PI | 264 | N2 | Bleed up cylinder regulated pressure | Incorrect reading - high | No hazard | Safe | Operational problem |
| PI | 272 | Air | Shop air regulated pressure | Incorrect reading -low | No hazard | Safe | Operational problem |

| | | | | | | | |
|---|---|---|---|---|---|---|---|
| PI | 272 | Air | Shop air regulated pressure | Incorrect reading - high | No hazard | Safe | Operational problem |
| PI | 274 | Ar | Argon purge cylinder pressure | Incorrect reading -low | No hazard | Safe | Operational problem |
| PI | 274 | Ar | Argon purge cylinder pressure | Incorrect reading - high | No hazard | Safe | Operational problem |
| PI | 275 | Ar | Argon purge cylinder regulated pressure | Incorrect reading -low | No hazard | Safe | Operational problem |
| PI | 275 | Ar | Argon purge cylinder regulated pressure | Incorrect reading - high | No hazard | Safe | Operational problem |

**Pressure relief valves**

| | | | | | | | |
|---|---|---|---|---|---|---|---|
| PSV | 101 | N2 | LN2 transfer line trapped volume relief | Fails open | LN2 vents outside | Safe | Operational problem |
| PSV | 101 | N2 | LN2 transfer line trapped volume relief | Fails closed | Potential trapped volume | Marginal | Low probability of a quality Circle-Seal relief valve failing completely shut. As pressure in the trapped volume exceeded the relief valve set point, the probability of a stuck relief valve opening would increase. |
| PSV | 117 | N2 | LN2 transfer line trapped volume relief | Fails open | LN2 vents outside | Safe | Operational problem |
| PSV | 117 | N2 | LN2 transfer line trapped volume relief | Fails closed | Potential trapped volume | Marginal | Low probability of a quality Circle-Seal relief valve failing completely shut. As pressure in the trapped volume exceeded the relief valve set point, the probability of a stuck relief valve opening would increase. |
| PSV | 118 | N2 | LN2 transfer line trapped volume relief | Fails open | LN2 vents outside | Safe | Operational problem |
| PSV | 118 | N2 | LN2 transfer line trapped volume relief | Fails closed | Potential trapped volume | Marginal | Low probability of a quality Circle-Seal relief valve failing completely shut. As pressure in the trapped volume exceeded the relief valve set point, the probability of a stuck relief valve opening would increase. |
| PSV | 136 | Ar | Contamination gas supply line relief | Fails open | Bottle gas vents into PAB | Safe | ODH analysis indicates this is acceptable |
| PSV | 136 | Ar | Contamination gas supply line relief | Fails closed | Components unprotected against bottle failure | Marginal | Requires both the bottle regulator and the relief valve to fail to create a hazard. There is a very low probability of both components failing simultaneously. |
| PSV | 137 | N2 | Bleed up gas supply line relief | Fails open | Bottle gas vents into PAB | Safe | ODH analysis indicates this is acceptable |
| PSV | 137 | N2 | Bleed up gas supply line relief | Fails closed | Components unprotected against bottle failure | Marginal | Requires both the bottle regulator and the relief valve to fail to create a hazard. There is a very low probability of both components failing simultaneously. |
| PSV | 156 | Ar | Luke vapor pump trapped volume relief | Fails open | GAr vents outside | Safe | Operational problem - Vapor pump will malfunction, |
| PSV | 156 | Ar | Luke vapor pump trapped volume relief | Fails closed | Potential trapped volume | Safe | Bellows in Fermilab designed and fabricated "cold" valve EP-308-Ar will fail and vent filter volume into cryostat. |
| PSV | 203 | Ar | Liquid argon source manifold trapped volume relief | Fails open | GAr vents outside | Safe | |
| PSV | 203 | Ar | Liquid argon source manifold trapped volume relief | Fails closed | Potential trapped volume | Marginal | Low probability of a quality Circle-Seal relief valve failing completely shut. As pressure in the trapped volume exceeded the relief valve set point, the probability of a stuck relief valve opening would increase. |
| PSV | 210 | Ar | Luke LAr volume pressure relief | Fails open | GAr vents outside | Safe | Operational problem - Can't build pressure in cryostat |
| PSV | 210 | Ar | Luke LAr volume pressure relief | Fails closed | Potential trapped volume | Safe | Very low probability of an ASME coded relief valve failing shut. Rupture disk RD-302-Ar will blow at 55 psig which is 1.5x MAWP |
| PSV | 211 | Ar | Pbar molecular sieve filter dewar inner vessel relief | Fails open | Spoils molecular sieve insulating vacuum | Safe | Increased losses during LAr transfer or increased heat load during filter regeneration |
| PSV | 211 | Ar | Pbar molecular sieve filter dewar inner vessel relief | Fails closed | No Hazard | Safe | CVI-220-V provides relief at ~ 0 psig with its spring removed |
| PSV | 219 | Ar | Molecular sieve trapped volume relief | Fails open | LAr flows to vaporizer and vents outside PAB | Safe | Operational problem - poor LAr transfer, contamination introduction if piping is evacuated |
| PSV | 219 | Ar | Molecular sieve trapped volume relief | Fails closed | Potential trapped volume | Marginal | Low probability of a quality Circle-Seal relief valve failing completely shut. As pressure in the trapped volume exceeded the relief valve set point, the probability of a stuck relief valve opening would increase. |
| PSV | 249 | Ar | LAr transfer line trapped volume relief | Fails open | LAr vents outside PAB | Safe | Operational problem - poor LAr transfer, contamination introduction if piping is evacuated |
| PSV | 249 | Ar | LAr transfer line trapped volume relief | Fails closed | Potential trapped volume | Marginal | Low probability of a quality Circle-Seal relief valve failing completely shut. As pressure in the trapped volume exceeded the relief valve set point, the probability of a stuck relief valve opening would increase. |
| PSV | 250 | Ar | LAr transfer line trapped volume relief | Fails open | LAr vents outside PAB | Safe | Operational problem - poor LAr transfer, contamination introduction if piping is evacuated |
| PSV | 250 | Ar | LAr transfer line trapped volume relief | Fails closed | Potential trapped volume | Marginal | Low probability of a quality Circle-Seal relief valve failing completely shut. As pressure in the trapped volume exceeded the relief valve set point, the probability of a stuck relief valve opening would increase. |
| PSV | 276 | Ar | Argon purge pressure relief | Fails open | Bottle supplied GAr vents inside PAB | Safe | Operational problem - Possible o-ring O2 diffusion contamination, ODH analysis indicates GAr venting is acceptable |
| PSV | 276 | Ar | Argon purge pressure relief | Fails closed | Downstream components unprotected | Marginal | Requires both the bottle regulator and the relief valve to fail to create a hazard. There is a very low probability of both components failing simultaneously. |
| PSV | 313 | Ar | Materials lock pressure relief | Fails open | Materials lock & possibly cryostat depressurize | Safe | Operational problem |
| PSV | 313 | Ar | Materials lock pressure relief | Fails closed | Materials lock & and bellows over pressurized | Marginal | Low probability of a quality Circle-Seal relief valve failing completely shut. As pressure in the trapped volume exceeded the relief valve set point, the probability of a stuck relief valve opening would increase. Also its very difficult for liquid to reach this space. |
| PSV | 344 | 313 | LAr transfer line vacuum relief | Fails open | Spoils LAr transfer line insulating vacuum | Safe | Operational problem - Increased liquid loss during LAr transfer |
| PSV | 344 | V | LAr transfer line vacuum relief | Fails closed | Potential trapped volume | Marginal | Unlikely a cryogenic leak form the inner line could build up much pressure in a vacuum jacket constructed from vacuum fittings. There is a very low probability of a parallel plate relief failing open. |

**Pressure transmitters**

| | | | | | | | |
|---|---|---|---|---|---|---|---|
| PT | 1 | N2 | Luke condenser LN2 back pressure | Incorrect reading -low | No Hazard | Safe | Operational problem - PI-133-N2 provides redundant instrumentation |
| PT | 1 | N2 | Luke condenser LN2 back pressure | Incorrect reading - high | No Hazard | Safe | Operational problem - PI-133-N2 provides redundant instrumentation |
| PT | 11 | Ar | Luke Ar vapor pressure | Incorrect reading -low | Luke vapor pressure hard to control | Safe | Operational problem - PI-12-Ar provides redundant instrumentation |
| PT | 11 | Ar | Luke Ar vapor pressure | Incorrect reading - high | Luke vapor pressure hard to control | Safe | Operational problem - PI-12-Ar provides redundant instrumentation |

| | | | | | | | |
|---|---|---|---|---|---|---|---|
| PT | 15 | V | LAr transfer line insulating vacuum | Incorrect reading -low | Insulating vacuum worse than indicated | Safe | Operational problem - increased LAr losses, PE-235-V provides redundant instrumentation |
| PT | 15 | V | LAr transfer line insulating vacuum | Incorrect reading - high | Insulating vacuum better than indicated | Safe | Operational problem - time could be spent investigating a non-existent problem, PE-235-V provides redundant instrumentation |
| PT | 19 | V | Luke Argon volume rough vacuum | Incorrect reading -low | Ion gauge PT-33-V could be damaged | Safe | Operational problem |
| PT | 19 | V | Luke Argon volume rough vacuum | Incorrect reading - high | Ion gauge PT-33-V won't turn on | Safe | Operational problem |
| PT | 27 | N2 | Nitrogen transfer line pressure | Incorrect reading -low | Possible controls issues | Safe | Operational problem |
| PT | 27 | N2 | Nitrogen transfer line pressure | Incorrect reading - high | Possible controls issues | Safe | Operational problem |
| PT | 33 | V | Luke Argon volume high vacuum | Incorrect reading -low | Argon volume vacuum worse than indicated | Safe | Operational problem - possible contamination issues if high vacuum is not achieved before fill |
| PT | 33 | V | Luke Argon volume high vacuum | Incorrect reading - high | Argon volume vacuum better than indicated | Safe | Operational problem - time may be wasted by unnecessary pumping |
| PT | 51 | N | LN2 dewar pressure transmitter | Incorrect reading -low | Possible controls issues | Safe | Operational problem |
| PT | 51 | N | LN2 dewar pressure transmitter | Incorrect reading - high | Possible controls issues | Safe | Operational problem |
| PT | 68 | V | Luke dewar insulating vacuum | Incorrect reading -low | Insulating vacuum worse than indicated | Safe | Operational problem - possible high LAr boil-off leading to increased LN2 consumption or GAr venting thru PSV-210-Ar which ODH analysis indicates is OK |
| PT | 68 | V | Luke dewar insulating vacuum | Incorrect reading - high | Insulating vacuum better than indicated | Safe | Operational problem - time could be spent investigating a non-existent problem |
| PT | 69 | V | Luke seal monitoring at vacuum pump | Incorrect reading -low | Insulating vacuum worse than indicated | Safe | Operational problem - poor vacuum can lead to O2 diffusion thru o-ring seals |
| PT | 69 | V | Luke seal monitoring at vacuum pump | Incorrect reading - high | Insulating vacuum better than indicated | Safe | Operational problem - time could be spent investigating a non-existent problem |
| PT | 180 | V | P-bar mole sieve filter dewar - filter insulating vacuum | Incorrect reading -low | Insulating vacuum worse than indicated | Safe | Operational problem - high LAr losses during transfer and high heat loads during regeneration |
| PT | 180 | V | P-bar mole sieve filter dewar - filter insulating vacuum | Incorrect reading - high | Insulating vacuum better than indicated | Safe | Operational problem - time could be spent investigating a non-existent problem |
| PT | 181 | V | P-bar mole sieve filter dewar - dewar insulating vacuum | Incorrect reading -low | Insulating vacuum worse than indicated | Safe | Operational problem - high LAr losses during transfer and high heat loads during regeneration |
| PT | 181 | V | P-bar mole sieve filter dewar - dewar insulating vacuum | Incorrect reading - high | Insulating vacuum better than indicated | Safe | Operational problem - time could be spent investigating a non-existent problem |
| PT | 185 | V | Materials lock rough vacuum | Incorrect reading -low | Ion gauge PT-33-V could be damaged | Safe | Operational problem |
| PT | 185 | V | Materials lock rough vacuum | Incorrect reading - high | Ion gauge PT-33-V won't turn on | Safe | Operational problem |
| PT | 186 | V | Materials lock high vacuum | Incorrect reading -low | Vacuum worse than indicated | Safe | Operational problem - if not properly evacuated, contamination may be an issue |
| PT | 186 | V | Materials lock high vacuum | Incorrect reading - high | Vacuum better than indicated | Safe | Operational problem - time could be spent investigating a non-existent problem |
| PT | 154 | V | Pbar oxygen filtering dewar filter insulating vacuum | Incorrect reading -low | Insulating vacuum better than indicated | Safe | Operational problem - time could be spent investigating a non-existent problem |
| PT | 154 | V | Pbar oxygen filtering dewar filter insulating vacuum | Incorrect reading - high | Insulating vacuum worse than indicated | Safe | Operational problem - high LAr losses during transfer and high heat loads during regeneration |

**Rupture disks**

| | | | | | | | |
|---|---|---|---|---|---|---|---|
| RD | 99 | N | LN2 dewar rupture disk | Fails open | LN2 dewar blows down - No LN2 transfer | Safe | Operational problem - No LN2 will be supplied to GAr condensers |
| RD | 99 | N | LN2 dewar rupture disk | Fails closed | No hazard | Safe | SV-99-N provides dewar relief |
| RD | 100 | N | LN2 dewar rupture disk | Fails open | LN2 dewar blows down - No LN2 transfer | Safe | Operational problem - No LN2 will be supplied to GAr condensers |
| RD | 100 | N | LN2 dewar rupture disk | Fails closed | No hazard | Safe | SV-100-N provides dewar relief |
| RD | 209 | Ar | Pbar molecular sieve filter dewar inner vessel relief | Fails open | Spoils molecular sieve insulating vacuum | Safe | Increased losses during LAr transfer or increased heat load during filter regeneration |
| RD | 209 | Ar | Pbar molecular sieve filter dewar inner vessel relief | Fails closed | No Hazard | Safe | CVI-220-V provides relief at ~ 0 psig with its spring removed |
| RD | 301 | V | Pbar oxygen filtering dewar filter insulating volume pressure relief | Fails open | Spoils O2 filter insulating vacuum | Safe | Increased losses during LAr transfer or increased heat load during filter regeneration |
| RD | 301 | V | Pbar oxygen filtering dewar filter insulating volume pressure relief | Fails closed | No Hazard | Safe | Parallel plate relief PSV-344-V provides adequate relief |
| RD | 302 | V | Luke cryostat LAr volume pressure relief | Fails open | Cryostat blows down | Safe | Operational problem |
| RD | 302 | V | Luke cryostat LAr volume pressure relief | Fails closed | No Hazard | Safe | PSV-210-Ar provides adequate relief |

**Pressure regulators**

| | | | | | | | |
|---|---|---|---|---|---|---|---|
| RV | 36 | N | LN2 dewar pressure building regulator | Fails open | Excess N2 vapor is created | Safe | Operational problem - SV-99-N and SV-100-N will vent vapor |
| RV | 36 | N | LN2 dewar pressure building regulator | Fails closed | Can't build pressure | Safe | Operational problem - need pressure to transfer LN2 into PAB |
| RV | 90 | N | LN2 dewar pressure relieving regulator | Fails open | LN2 dewar blows down | Safe | Operational problem - need pressure to transfer LN2 into PAB |
| RV | 90 | N | LN2 dewar pressure relieving regulator | Fails closed | LN2 dewar above normal operating pressure | Safe | Operational problem, SV-99-N and SV-100-N will vent vapor |

**Strainers**

| | | | | | | | |
|---|---|---|---|---|---|---|---|
| S | 91 | N | LN2 dewar fill line strainer | Plugged up | LN2 dewar can't be filled | Safe | Operational problem |
| S | 91 | N | LN2 dewar fill line strainer | Does not filter | Debris from outside pass thru fill line | Safe | Operational problem, dirt can keep valves from sealing tight |

**Relief valves**

| | | | | | | | |
|---|---|---|---|---|---|---|---|
| SV | 90 | N | LN2 dewar fill line trapped volume relief | Fails open | LN2 vents into parking lot during fill | Safe | Operational problem |
| SV | 90 | N | LN2 dewar fill line trapped volume relief | Fails closed | Potential unrelieved trapped volume | Marginal | Low probability of a quality Circle-Seal relief valve failing completely shut. As pressure in the trapped volume exceeded the relief valve set point, the probability of a stuck relief valve opening would increase. |
| SV | 90 | V | LN2 dewar vacuum jacket relief | Fails open | Insulating vacuum spoils | Safe | Operational problem - SV-99-N and SV-100-N have adequate capacity |
| SV | 90 | V | LN2 dewar vacuum jacket relief | Fails closed | Vacuum space is not relieved | Marginal | A parallel plate relief without spring loading is unlikely to fail closed |
| SV | 96 | N | LN2 dewar pressure building loop trapped volume relief | Fails open | LN2 vents into parking lot | Safe | Operational problem - loop can be isolated to fix relief valve |

| | | | | | | | |
|---|---|---|---|---|---|---|---|
| SV | 96 | N | LN2 dewar pressure building loop trapped volume relief | Fails closed | Potential unrelieved trapped volume | Marginal | Low probability of a quality Circle-Seal relief valve failing completely shut. As pressure in the trapped volume exceeded the relief valve set point, the probability of a stuck relief valve opening would increase. |
| SV | 97 | N | LN2 dewar pressure building loop trapped volume relief | Fails open | LN2 vents into parking lot | Safe | Operational problem - loop can be isolated to fix relief valve |
| SV | 97 | N | LN2 dewar pressure building loop trapped volume relief | Fails closed | Potential unrelieved trapped volume | Marginal | Low probability of a quality Circle-Seal relief valve failing completely shut. As pressure in the trapped volume exceeded the relief valve set point, the probability of a stuck relief valve opening would increase. |
| SV | 98 | N | LN2 dewar pressure building loop trapped volume relief | Fails open | LN2 vents into parking lot | Safe | Operational problem - loop can be isolated to fix relief valve |
| SV | 98 | N | LN2 dewar pressure building loop trapped volume relief | Fails closed | Potential unrelieved trapped volume | Marginal | Low probability of a quality Circle-Seal relief valve failing completely shut. As pressure in the trapped volume exceeded the relief valve set point, the probability of a stuck relief valve opening would increase. |
| SV | 99 | N | LN2 dewar relief valve | Fails open | LN2 dewar blows down | Safe | Operational problem - need pressure to transfer LN2 into PAB |
| SV | 99 | N | LN2 dewar relief valve | Fails closed | RD-99-N will vent dewar | Safe | Operational problem - rupture disk would have to be replaced after failure |
| SV | 100 | N | LN2 dewar relief valve | Fails open | LN2 dewar blows down | Safe | Operational problem - need pressure to transfer LN2 into PAB |
| SV | 100 | N | LN2 dewar relief valve | Fails closed | RD-100-N will vent dewar | Safe | Operational problem - rupture disk would have to be replaced after failure |

**Temperature elements**

| | | | | | | | |
|---|---|---|---|---|---|---|---|
| TE | 6 | N2 | LN2 transfer line cool down temperature (control) | Incorrect reading -low | Cool down falsely indicated complete | Safe | Operational problem - could cause controls issues |
| TE | 6 | N2 | LN2 transfer line cool down temperature (control) | Incorrect reading - high | Cool down falsely indicated incomplete | Safe | Operational problem - could cause controls issues, wasted LN2 |
| TE | 7 | Ar | O2 filter internal temperature (hard wired interlock) | Incorrect reading -low | Interlock does not protect heater | Safe | If PLC controls fails, heater could overheat and damage filter material |
| TE | 7 | Ar | O2 filter internal temperature ((hard wired interlock) | Incorrect reading - high | Filter regeneration heater prematurely shuts off | Safe | TE-54-Ar provides redundant instrumentation for PLC control |
| TE | 23 | Ar | Luke pressure building heater internal temperature (read out) | Incorrect reading -low | PLC does not shut off heater | Safe | If hard wired interlock also fails, heater could overheat and damage silver soldered joints |
| TE | 23 | Ar | Luke pressure building heater internal temperature (read out) | Incorrect reading - high | Pressure building heater prematurely shuts off | Safe | Operational problem - controls issue could arise |
| TE | 24 | Ar | Luke pressure building heater internal temperature ((hard wired interlock) | Incorrect reading -low | Interlock does not protect heater | Safe | If PLC controls fails, heater could overheat and damage silver soldered joints |
| TE | 24 | Ar | Luke pressure building heater internal temperature ((hard wired interlock) | Incorrect reading - high | Pressure building heater prematurely shuts off | Safe | Operational problem - controls issue could arise |
| TE | 54 | Ar | O2 filter internal temperature (control) | Incorrect reading -low | Filter regeneration temperature too high | Safe | If hardwired interlock also fails, heater could overheat and damage filter material |
| TE | 54 | Ar | O2 filter internal temperature (control) | Incorrect reading - high | Filter regeneration temperature too low | Safe | Operational problem - poorly regenerated filter could result |
| TE | 56 | Ar | O2 filter regeneration gas pre-heater temperature (control) | Incorrect reading -low | Filter regeneration gas temperature too high | Safe | If hardwired interlock also fails, heater could overheat |
| TE | 56 | Ar | O2 filter regeneration gas pre-heater temperature (control) | Incorrect reading - high | Filter regeneration gas temperature too low | Safe | Operational problem - poorly regenerated filter could result |
| TE | 57 | Ar | O2 filter regeneration gas pre-heater temperature ((hard wired interlock) | Incorrect reading -low | Interlock does not protect heater | Safe | If PLC controls fails, heater could overheat and damage filter material |
| TE | 57 | Ar | O2 filter regeneration gas pre-heater temperature ((hard wired interlock) | Incorrect reading - high | Filter regeneration gas heater prematurely shuts off | Safe | TE-56-Ar provides redundant instrumentation for PLC control |
| TE | 73 | HAr | Luke Vapor pump filter regeneration heater (control) | Incorrect reading -low | Filter regeneration temperature too high | Safe | If hardwired interlock also fails, heater could overheat and damage filter material |
| TE | 73 | HAr | Luke Vapor pump filter regeneration heater (control) | Incorrect reading - high | Filter regeneration temperature too low | Safe | Operational problem - poorly regenerated filter could result |
| TE | 74 | HAr | Luke Vapor pump filter regeneration heater (hard wired interlock) | Incorrect reading -low | Interlock does not protect heater | Safe | If PLC controls fails, heater could overheat and damage filter material |
| TE | 74 | HAr | Luke Vapor pump filter regeneration heater (hard wired interlock) | Incorrect reading - high | Filter regeneration heater prematurely shuts off | Safe | TE-73-HAr provides redundant instrumentation for PLC control |
| TE | 76 | Ar | Luke Vapor pump "cup" heater (control) | Incorrect reading -low | Vapor producing heater overheats | Safe | If hardwired interlock also fails, heater could overheat and damage silver soldered joints |
| TE | 76 | Ar | Luke Vapor pump "cup" heater (control) | Incorrect reading - high | PLC prematurely shuts off heater | Safe | Operational problem - need properly functioning heater to make GAr to push LAr out of pump |
| TE | 77 | Ar | Luke Vapor pump "cup" heater (hard wired interlock) | Incorrect reading -low | Interlock does not protect heater | Safe | If PLC controls fails, heater could overheat and damage silver soldered joints |
| TE | 77 | Ar | Luke Vapor pump "cup" heater (hard wired interlock) | Incorrect reading - high | Heater prematurely shuts off | Safe | TE-76-HAr provides redundant instrumentation for PLC control |
| TE | 214 | Ar | Molecular sieve regeneration temperature (hard wired interlock) | Incorrect reading -low | Interlock does not protect heater | Safe | If PLC controls fails, heater could overheat and damage filter material |
| TE | 214 | Ar | Molecular sieve regeneration temperature (hard wired interlock) | Incorrect reading - high | Filter regeneration heater prematurely shuts off | Safe | TE-216-Ar provides redundant instrumentation for PLC control |
| TE | 216 | Ar | Molecular sieve regeneration temperature (controls) | Incorrect reading -low | Filter regeneration temperature too high | Safe | If hardwired interlock also fails, heater could overheat and damage filter material |
| TE | 216 | Ar | Molecular sieve regeneration temperature (controls) | Incorrect reading - high | Filter regeneration temperature too low | Safe | Operational problem - poorly regenerated filter could result |

Fermilab

Component FLARE Material Test Station

Location PAB
Date 6/14/07
By Terry Tope

**3.2 - WHAT-IF WORKSHEET**

| WHAT-IF | CONSEQUENCE/HAZARD | CONCLUSION/RECOMMENDATIONS |
|---|---|---|
| Loss of liquid nitrogen | Argon boil off will vent thru vent valve or relief valve and cryostat pressure control is lost. | Safe condition. Operational impact only – need a closed system for material contamination tests. |
| Loss of insulating vacuums | System frosts over. Higher heat load to LN2 and LAr circuits. Potential for relief valves to open.<br><br>May cause high consumption of liquid nitrogen. | Safe condition. System is protected with relief valves that vent outdoors.<br><br>Safe condition. Operational impact. |
| Loss of instrumentation | May cause system instability with respect to cryostat pressure control or regeneration heater control. | Safe condition. Operational impact. |
| Power outage occurs at PAB | All control and instrumentation fails. | Safe condition. Operational impact – Historical values no longer recorded, no pressure control, relief valves vent. |
| Leaking stem packing on a cryo valve | Gas will vent into room. | Safe condition (see ODH analysis). |
| Transfer line inner lines rupture, weld cracks, or silver solder joint breaks | Loss of insulating vacuum and pressurization of the vacuum space. | Safe condition. Gas will vent into room thru vacuum reliefs into room (see ODH analysis). |
| Weld cracks, bellows break on the vacuum circuit. | Air will fill the vacuum space, thus creating a higher heat load to the cryo circuits. | Safe condition. System is protected with relief valves. May cause long cool down times for LN2 circuit or zero delivery condition. |

| | | |
|---|---|---|
| Liquid nitrogen dewar is pressurized to MAWP and all valves that would normally keep the transfer line connected to a vent are closed. | Piping pressurized to dewar MAWP. | Safe condition. MAWP = 75 psig for LN2 dewar. The sizing calculations for the dewar reliefs prove that this pressure cannot be exceeded. All of the components of the transfer line have pressure ratings greater than 75 psig. |
| | High LN2 delivery pressure may make it hard to control pressure in Luke using the condenser. | Safe condition. Operational problem. |
| PLC failure | Pressure control and heater control lost. | Safe condition. Operational impact. LAr will vent thru relief valves. |
| A fire in PAB | Fire detectors go into alarm. Sprinklers open in high bay. Fire Department dispatched. | |
| | Likely equipment damage. | |
| | Fire or water from sprinklers could cause significant damage to controls hardware, wiring, and instrumentation. | Safe condition. Operational problem - Control system not required for system safety but required for operation. |
| | Superinsulation on piping and vessels could be damaged. | Safe condition. Operational problem - Heat leaks during normal operation would be unacceptable if radiation blankets are damaged. |
| | Heat input into cryogenic liquids builds pressure in piping and cryostat. | Safe condition. Pressure vessels and piping protected by relief valves (see relief calculations and FMEA). Relief valves vent outside. |
| | Insulating vacuums may spoil if o-rings are subjected to intense heat. | Safe condition. System is protected with relief valves that vent outdoors. Operational problem - Heat leaks during normal operation would be unacceptable if insulating vacuums are spoiled. |

Thus there is enough nitrogen contained in the supply dewar to fully inert the PAB high bay enclosure.

The equivalent amount of warm argon gas contained in four stock room dewars

is $4 \times 160 liters \times \frac{ft^3}{28.32 liters} \times \frac{87 lb}{ft^3} \times \frac{ft^3}{0.1034 lb} = 19015 ft^3$.

The equivalent amount of warm argon gas in the 250 liter cryostat is

$$250 liters \times \frac{ft^3}{28.32 liters} \times \frac{87 lb}{ft^3} \times \frac{ft^3}{0.1034 lb} = 7428 ft^3.$$

If the four stockroom dewars are instantly vented into PAB, the minimum O2 concentration reached is

$$138425 ft^3_{air} - 19015 ft^3_{argon} = 119410 ft^3_{air}$$

$$119410 ft^3_{air} \times 0.21 = 25076 ft^3_{oxygen}$$

$$\frac{25076 ft^3_{oxygen}}{138425 ft^3_{air}} \times 100 = 18.1\%_{oxygen}.$$

If the four stockroom dewars are instantly vented into PAB along with the 250 liter cryostat, the minimum O2 concentration reached is

$$138425 ft^3_{air} - \left(19015 ft^3_{\arg on} + 7428 ft^3_{argon}\right) = 111982 ft^3_{air}$$

$$111982 ft^3_{air} \times 0.21 = 23516 ft^3_{oxygen}$$

$$\frac{23516 ft^3_{oxygen}}{138425 ft^3_{air}} \times 100 = 17.0\%_{oxygen}.$$

Argon is heavier than air so it cannot be assumed to perfectly mix with air to create the above minimum oxygen concentrations.

The PAB high bay floor is about 100 feet by 49 feet. If the argon is assumed to spread out across the floor and remain separate from the air, the thickness of the stratified argon layer for four stock room dewars instantly dumped into the room is

$$\frac{19015\,ft^3}{100\,ft \times 49\,ft} = 3.9\,ft.$$

If the 250 liter cryostat is dumped into the room along with the four stock room dewars the argon layer depth is

$$\frac{19015\,ft^3 + 7428\,ft^3}{100\,ft \times 49\,ft} = 5.4\,ft.$$

## Ventilation System and ODH monitors

PAB is equipped with 3 ceiling exhaust fans. FESS has determined the capacity of each fan to be at least 2000 SCFM Air. All three ceiling fans will turn on in the event of an ODH alarm. They are also wired in a manner that allows each fan to be turned on manually. In addition to the ceiling fans, a dedicated ODH fan has been installed in the cryogenic area. This fan pulls the cold dense gas from the floor and pushes it thru a duct which exhausts outside PAB. Together all four fans yield a volume change in the high bay area every 17 minutes. Only the dedicated ODH fan is included in the ODH analysis. At the end of this section the details of the dedicated ODH fan and ODH hardware layout are documented. Figure 3.5a.1 shows the locations of ODH heads, horns, and fans.

## ODH Event Leak rates for Nitrogen Circuit

### Severed Line

Several leak rates are postulated for the nitrogen circuit. The most severe of these considers the liquid nitrogen supply line to be severed just inside PAB. The flow rate at this point is then a function of the resistance offered by the piping outside PAB and the pressure of the dewar. The dewar pressure is taken to be the maximum allowable pressure under fire conditions which is 121% of the dewar MAWP of 75 psig or

$$1.21(75+15) - 15 = 93.9\,psig.$$

The flow rate thru the LN2 piping outside PAB is calculated using the following equation from Crane's Technical Paper 410 for discharge of liquid

$$W = 1891 d^2 \sqrt{\frac{\Delta P \rho}{K}}$$

where

*W* = rate of liquid nitrogen flow in pounds per hour.

*d* = internal diameter of pipe, = 0.5 – 2 x 0.035 = 0.43 inches.

$\Delta P$ = differential pressure, 93.9 psi.

$\rho$ = density of liquid nitrogen saturated at 93.9 psig, 43.19 lb/ft$^3$.

*K* = resistance coefficient, sum of $K_{pipe} + K_{elbow} + K_{valve} + K_{exit}$

$K_{pipe}$ = resistance of straight pipe outside PAB, $K_{pipe} = f\dfrac{L}{D}$ where

*f* = friction factor determined from pipe size and Reynolds number, = 0.029 (page A-25 of Crane 410)

*L* = length of pipe outside PAB, 227 inches.

*D* = internal diameter of pipe, 0.43 inches.

$K_{elbow}$ = resistance of a standard elbow which = 30 x $f_T$ where $f_T$ is the friction factor in the zone of complete turbulence for 0.43 inch internal diameter pipe which is 0.029. Piping outside PAB has 2 elbows.

$K_{exit}$ = resistance of a sharp edged pipe exit for the severed pipe, = 1.0

$K_{valve}$ = resistance of the Cryolab isolation valve at the dewar exit,

$$K_{valve} = \frac{894 d^4}{C_v^2} \text{ where}$$

$C_v$ = flow coefficient for valve, $C_v$ = 12 for Cryolab valve

$R_e$ = Reynolds number, ratio of inertial and viscous forces

$$R_e = 6.31\frac{W}{d\mu} \text{ where}$$

$\mu$ = absolute viscosity of LN2 saturated at 93.9 psig, = 0.088 centipoise

The above equations yield

$$K = 0.029\frac{227}{0.43} + 2 \times 30 \times 0.029 + \frac{894(0.43)^4}{12^2} + 1.0 = 18.26$$

$$R_e = 6.31\frac{4889}{(0.43)0.088} = 815264$$

$W = 1891(0.43)^2\sqrt{\frac{93.9(43.19)}{18.26}} = 5211\frac{lb}{hr}$ which converts to SCFM in the following manner

$$5211\frac{lb}{hr} \times \frac{ft^3}{0.07247lb} \times \frac{hr}{60\min} = 1198\frac{ft^3}{\min}.$$

Thus the maximum flow the liquid nitrogen dewar can supply into PAB is equivalent to 1198 SCFM of nitrogen gas.

<u>Valve and Instrument Leakage</u>

For leakage from valves and instruments on the LN2 supply line, the leak was modeled as an orifice whose diameter is 25% of the pipe diameter. It is unlikely that valve bodies or instruments will fail in a manner that completely opens up the supply piping. Before use, all piping will be pressure tested and helium leak checked.

The leak rate is calculated using the following equation from Crane Technical Paper 410 for liquid flow thru nozzles and orifices

$W = 1891d_1^2C\sqrt{\Delta P\rho}$ where

all variables except *C* and $d_1$ are previously defined.

$d_1$ = orifice diameter, 25% of 0.5 inch nominal tube diameter = 0.125 inch.

*C* = flow coefficient for nozzles and orifices (Crane 410 Page A-20), = 0.60 for this case.

The maximum flow of nitrogen thru such a leak is

$W = 1891(0.125^2)0.60\sqrt{(93.9)43.19} = 1129\frac{lb}{hr}$ which converts to

$1129\frac{lb}{hr} \times \frac{ft^3}{0.07247lb} \times \frac{hr}{60\min} = 260\frac{ft^3}{\min}$ of warm atmospheric N2 gas.

The factor *C* was found from the plot on page A-20 using

$R_e = 6.31\frac{1129}{(0.125)0.088} = 647635$ and $\beta = \frac{d_1}{d_2} = \frac{0.125}{0.43} = 0.29$ where $d_2$ is the actual ID of the LN2 supply pipe.

Thus on the liquid nitrogen supply line, the leak rate for components is estimated as 260 SCFM which is 23% of the total mass flow available inside PAB.

**<u>ODH Event Leak rates for Argon Circuit</u>**

<u>Severed Line</u>

The four argon supply dewars are each equipped with a liquid isolation valve with a $C_v$ of 1.08. Thus the worst case leak is a severed line just after all four dewars are tied together. From Crane 410, the flow rate out of one dewar can be calculated as

$Q = C_v\sqrt{\Delta P\frac{62.4}{\rho}}$ where

$Q$ = rate of liquid argon flow in gallons per minute.

$C_v$ = flow coefficient for valve, $C_v$ = 1.08 for dewar liquid isolation valve according to Airgas.

$\Delta P$ = differential pressure, 350 psi based on stockroom supplied high pressure liquid argon dewars with reliefs set at 350 psig.

$\rho$ = density of liquid argon saturated at 350 psig, 63.37 lb/ft$^3$.

The maximum liquid flowrate out of one stock room dewar is found to be

$Q = 1.08\sqrt{350\frac{62.4}{63.37}} = 20.05\frac{gal}{\min}$ which converts to

$20.05\frac{gal}{\min} \times \frac{1ft^3}{7.48gal} \times \frac{63.37lb}{ft^3} \times \frac{ft^3}{0.1034lb} = 1643\frac{ft^3}{\min}$ where 0.1034 lb/ft$^3$ is the density of argon gas at standard conditions. Thus four dewars could

supply 6572 SFCM of warm argon gas. This is conservative because the hoses and tubing connecting the four dewars would provide additional restriction that would lower this flow rate.

LAr Supply Dewar Relief Valves

The relief valves on the LAr supply dewars could prematurely open. The typical relief valve on the Airgas supplied dewars is a Generant LCV-250B-K-350 which according to the manufacturer has a maximum flow of 81.4 SCFM Nitrogen at 120% of its 350 psig set point. This converts to lb/hr as

$$\frac{81.4\,ft^3}{\min} \times \frac{60\min}{hr} \times \frac{0.07247\,lb}{ft^3} = 354\frac{lb}{hr}.$$

This can be converted to SCFM argon using the method outlined in ASME Section VIII Appendix 11 Division 1 entitled "Capacity Conversions for Safety Relief Valves."

For any gas or vapor,

$W = CKAP\sqrt{\frac{M}{T}}$ where

*W* = rated capacity in lb/hr, 354 lb/hr for nitrogen, argon value to be solved for.

*C* = constant for gas or vapor which is a function of the ratio of specific heats, C = 356 for nitrogen and 378 for argon.

*KAP* = constant for the relief valve.

*M* = molecular weight, 28.02 for nitrogen and 39.9 for argon.

*T* = absolute temperature in Rankin, choose 530 $^{o}$R.

For the nitrogen rating,

$$KAP = \frac{W}{C\sqrt{\frac{M}{T}}} = \frac{354}{356\sqrt{\frac{28.02}{530}}} = 4.325.$$

The argon mass flow rate is then

$W = (356)(4.325)\sqrt{\frac{39.9}{530}} = 422.5\frac{lb}{hr}$ which converts to

$422.5\frac{lb}{hr} \times \frac{ft^3}{0.1034\,lb} \times \frac{hr}{60\min} = 68.1\frac{ft^3}{\min}$. Thus the maximum rate at which the

supply dewar can relieve itself is 68.1 SCFM.

MV-204-Ar, MV-218-Ar, MV-365-V, and MV-366-V

MV-204-Ar is an isolation valve where a vacuum pump can be connected to pump out the argon source manifold. If this valve with a $C_v$ of 1.2 is left wide open while the circuit is pressurized, the leak rate is found to be

$Q = C_v\sqrt{\Delta P\frac{62.4}{\rho}} = 1.20\sqrt{350\frac{62.4}{63.37}} = 22.28\frac{gal}{\min}$ . This converts to a warm argon gas flow rate of $22.28\frac{gal}{\min}\times\frac{1ft^3}{7.48gal}\times\frac{63.37lb}{ft^3}\times\frac{ft^3}{0.1034lb} = 1825\frac{ft^3}{\min}$. This leak rate is also used for MV-218-Ar, MV-365-V, and MV-366-V which are identical to MV-204-Ar and is conservative because these three valves are separated from the argon source by significant piping restrictions.

Valve and Instrument Leakage for Components Upstream of the Cryostat

For leakage from valves and instruments on the LAr transfer line, the leak is modeled as an orifice whose diameter is 0.125 inches which is 33% of the nominal 3/8 inch tube diameter used to construct most of the LAr piping. It is unlikely that valve bodies or instruments will fail in a manner that completely opens up the supply piping. Most valves on the argon circuit are high quality stainless steel construction with metal bellows seal to atmosphere.

The leak rate is calculated using the following equation from Crane Technical Paper 410 for liquid flow thru nozzles and orifices

$W = 1891d_1^2C\sqrt{\Delta P\rho}$ where

$d_1$ = orifice diameter, 33% of 0.375 inch nominal tube diameter = 0.125 inch.

$C$ = flow coefficient for nozzles and orifices (Page A-20 from Crane 410), = 0.60 for this case.

$\mu$ = absolute viscosity of liquid argon saturated at 350 psig, 0.0751 centipoise.

The maximum flow of argon thru such a leak is

$W = 1891\left(0.125^2\right)0.61\sqrt{(350)63.37} = 2684\frac{lb}{hr}$ which converts to

$2684\frac{lb}{hr} \times \frac{ft^3}{0.1034\,lb} \times \frac{hr}{60\min} = 433\frac{ft^3}{\min}$ of warm atmospheric argon gas.

The factor *C* was found from the plot on Crane 410 page A-20 using

$R_e = 6.31\frac{2684}{(0.125)0.0751} = 1804105$ and $\beta = \frac{d_1}{d_2} = \frac{0.125}{0.305} = 0.41$ where $d_2$ is the actual

ID of the LAr supply pipe (3/8 inch OD – 2 x 0.035 inch wall = 0.305 inch).

Thus on the liquid argon transfer line, the leak rate for components upstream of the cryostat is estimated as 433 SCFM.

<u>Valve and Instrument Leakage for Components Attached to the Cryostat</u>

From the relief valve calculations, the maximum mass flow rate into the cryostat was found to be 1437 pounds per hour. This equates to warm argon gas flowrate of 232 SCFM using the following conversion

$1437\frac{lb}{hr} \times \frac{ft^3}{0.1034\,lb} \times \frac{hr}{60\min} = 232\frac{ft^3}{\min}$. This value was used as the leak rate for all

components attached to the cryostat.

## <u>ODH Risk Assessment</u>

As explained in Section 5064 of Fermilab's ES&H Manual, the ODH classification of an enclosure is determined by calculating the ODH fatality rate, $\phi$. It is defined as:

$\phi = \sum_{i=1}^{n} P_i F_i$ where

$P_i$ = the expected rate of the $i^{th}$ failure per hour

$F_i$ = the fatality factor for the $i^{th}$ event.

The summation is taken over all events, which may cause oxygen deficiency and result in fatality. Fatality factors are calculated based on the maximum spill rate,

the rate of ventilation, and the size of the PAB enclosure. Events that could potentially lead to an ODH condition were identified and tabulated for the PAB high bay area in the tables at the end of this section. A single event probability was estimated in most cases using Table 2 "NRC Equipment Failure Rate" on page 5064TA-4 of Fermilab's ES&H Manual. In some cases, a failure probability was based on Fermilab experience since an applicable number was not readily available in the NRC table. Based on the number of components present in the PAB enclosure, a total event probability was calculated. The lowest oxygen concentration (as time approaches infinity) was computed by applying equation 4 on page 5064TA-8 of Fermilab's ES&H Manual:

$$C_r(t) = 0.21\left\{1 - \frac{R}{Q}\left[1 - e^{\left(\frac{-Qt}{V}\right)}\right]\right\} = 0.21\left\{1 - \frac{R}{Q}\right\} \; as \; t \Rightarrow \infty \text{ where}$$

*R* = spill rate into enclosure, SCFM.

*Q* = enclosure ventilation rate, CFM.

This equation assumes complete mixing of the gases with the ventilation fans drawing contaminated atmosphere from the confined volume. A fatality factor was then determined from Figure 1 on page 5064TA-2 of Fermilab's ES&H Manual. By multiplying this fatality factor by the total event probability, an ODH rate in fatalities/hour was calculated. The sum of all the ODH rates gives the total ODH rate for the enclosure.

This ODH analysis relies on the use of mechanical ventilation to remove the inert gas from PAB. Although this ventilation reduces the overall ODH risk, it is also subject to failure. Therefore, the probability that these failures will occur and compromise the ventilation system needs to be factored into the overall risk assessment. There are two main areas of concern. One is the failure of a ventilation fan motor to turn on or the fan louvers to open. The second is an unplanned electrical power outage during cryogenic operation. The total probability of any one of these events occurring is simply the sum of their probabilities. The ODH rate calculation table includes two cases. The first case is for the ventilation system running. The second case considers the loss of the ventilation system. In that case the failure rate of the forced ventilation is factored into the calculation. The probability of a component event failure and a ventilation failure occurring is the product of their failure probabilities since they are independent events.

The probability of ventilation failure was determined as follows. The probability of a power outage is $1 \times 10^{-4}$ / hr based on Fermilab equipment failure rates. The probability of an electric motor not starting is $3 \times 10^{-4}$ / *D* based on NRC data. To be conservative, the demand (*D*) is taken to be once an hour such that *D* = 1. This probability is used for both the fan motor starting and the actuated louvers

opening. Thus the probability of a ventilation failure is $1 \times 10^{-4} + 2 \times 3 \times 10^{-4} = 7 \times 10^{-4}$ / hr. This value is used in the table that considers a ventilation failure. The fan availability rate is then $1 - 7 \times 10^{-4}$ or 0.9993. This value is used in the table that considers the ventilation to be running.

The probability of a valve such as MV-204-Ar being left wide open was taken to be (0.1 / D) which is much greater than the value of ($3 \times 10^{-3}$ / D) described as a general human error of commission in Table 3 of FESHM 5064TA. If the valve is assumed to be cycled once per day, then the probability of an error is (0.1 / D) x (D / hr) = (0.1 / 1) x (1/24 hr) = $4.17 \times 10^{-3}$ per hour.

The probability of the operator ignoring high pressure liquid or gas audibly venting into the room is also taken to be (0.1 / D). If the valve is again assumed to be cycled once per day, the probability of the operator ignoring the error is $4.17 \times 10^{-3}$ per hour.

These two tasks are independent events such that the total probability of a valve staying in the wide open position and its venting into the room being ignored is the product of the two task probabilities or $4.17 \times 10^{-3} \times 4.17 \times 10^{-3} = 1.74 \times 10^{-5}$ per hour.

**ODH Results**

Table 1 finds the ODH fatality rate to be $1.01 \times 10^{-9}$ which is less than $10^{-7}$ such that with ventilation running the PAB high bay enclosure is ODH class zero.

Table 2 finds the ODH fatality rate to be $4.24 \times 10^{-9}$ which is less than $10^{-7}$ such that when ventilation failure is considered the PAB high bay enclosure is ODH class zero.

## ODH Hardware Layout and Dedicated ODH Fan Details

Figure 3.5a.1 shows the ODH hardware layout for PAB. Four ODH heads mounted 6 inches from the floor surround the cryogenic area. One alarm horn is mounted inside the high bay area. The second alarm horn is mounted in the room adjacent to the high bay.

The dedicated ODH fan is a GreenHeck SWB backward inclined centrifugal utility fan rated at 2000 SCFM air at 4 inches of water static pressure. The fan pushes the cold vapor from a spill thru a duct that includes two elbows, a 15 foot vertical rise, a damper, and two enlargements.

To verify the fan installation is adequate, the pressure drop thru the duct is estimated.

Equation 3-20 shown below from Crane Technical Paper 410 was used to calculate the pressure drop due to the flow of gas thru the duct

$$W = 1891 Y d^2 \sqrt{\frac{\Delta P}{K\overline{V}_1}} \Rightarrow \Delta P = \left(\frac{W}{1891 Y d^2}\right)^2 K\overline{V}_1$$

where

*W* = rate of flow in lbs per hour. ODH analysis is based on a 2000 SCFM flow of either nitrogen or argon. The nitrogen mass flow rate is then

$$2{,}000 \frac{ft^3}{\min} N_2 \times \frac{60 \min}{hr} \times 0.07247 \frac{lb}{ft^3} = 8{,}696 \frac{lb}{hr} N_2$$ and the argon mass

flow rate is

$$2{,}000 \frac{ft^3}{\min} Ar \times \frac{60 \min}{hr} \times 0.1034 \frac{lb}{ft^3} = 12{,}408 \frac{lb}{hr} Ar.$$

*Y* = net expansion factor for compressible flow, 1.0 for the small pressure drops in this duct flow analysis.

*d* = internal diameter of duct, inches. Duct is square, so an equivalent diameter is calculated as

$$d = 4 \frac{cross\ sectional\ flow\ area}{wetted\ perimeter} = 4 \frac{13 \times 20}{13 \times 2 + 20 \times 2} = 15.76\ in.$$

$\overline{V}_1$ = specific volume of fluid, 2.774 $ft^3$/lb for saturated argon vapor, 9.673 $ft^3$/lb for argon gas at STP, 3.465 $ft^3$/lb for saturated nitrogen vapor, and 13.8 $ft^3$/lb for nitrogen gas at STP.

$\Delta P$ = pressure drop in psi, converted to inches of water for comparison.

$K$ = total resistance coefficient, sum of $K_{elbow}$, $K_{enlarge1}$, $K_{enlarge2}$, $K_{straight}$, $K_{entrance}$, and $K_{exit}$.

$K_{elbow}$ = 30 x $f_T$ where $f_T$ is the friction factor in the zone of complete turbulence, 0.0132 for the ~16 inch equivalent duct diameter.

$K_{enlarge1}$ = resistance of enlargement from 9.625 x 13 inch fan outlet to 13 x 20 inch duct, 1.0 to be conservative.

$K_{enlarge2}$ = resistance of enlargement from 13 x 20 duct to 20 x 20 inch duct, 1.0 to be conservative.

$K_{straight}$ = resistance to flow thru straight pipe, $K_{straight} = f \times L / d$ where $f$ is the friction factor based on Reynolds # and $L$ is the length of the straight section which is 15 feet x 12 inches per ft. = 180 inches.

$K_{entrance}$ = resistance due to entrance into duct, 0.78.

$K_{exit}$ = resistance due to exit from duct, 1.0.

$Re$ = Reynolds number, $Re = 6.31\frac{W}{d\mu}$ (ratio of inertial to viscous forces).

$\mu$ = dynamic viscosity, 0.007029 centipoise for saturated argon vapor, 0.02246 centipoise for argon gas at STP, 0.005373 centipoise for saturated nitrogen vapor, and 0.01769 centipoise for nitrogen gas at STP.

The static head loss is calculated from the specific volume of the gas and the height of the duct as shown below

$$\frac{1}{\overline{V}_1}\frac{lb}{ft^3} \times \frac{L\ in}{1} \times \frac{ft}{12\ in} \times \frac{1\ ft^2}{144\ in^2} \times \frac{27.6799\ in.\ H2O}{1\ psi}.$$

For saturated argon vapor, the static head is found to be

$$\frac{1}{2.774}\frac{lb}{ft^3} \times \frac{180\ in}{1} \times \frac{ft}{12\ in} \times \frac{1\ ft^2}{144\ in^2} \times \frac{27.6799\ in.\ H2O}{1\ psi} = 1.039\ in.\ H2O.$$

The louver pressure drop was provided by the vendor for a 2000 SCFM air flow. It would be slightly more for the warm argon flow and less for the cold gas flows. For the warm argon gas flow, the louver pressure drop is adjusted upward by the ratio of the warm argon to nitrogen flowing pressure drops, 0.887 / 0.622 = 1.43.

Table 3.5a.3 provides estimates of pressure drop for the various cases. The fan rating of 2000 SCFM at 4 inches of $H_2O$ is more than adequate to handle the flow rates considered in the ODH analysis.

Table 3.5a.3: Pressure drop for both warm and cold gas flow thru the ODH duct.

| | *Re* | *f* | *K* | Flowing $\Delta P$ in. $H_2O$ | Static Head $\Delta P$ in. $H_2O$ | Louver $\Delta P$ in. $H_2O$ | Total $\Delta P$ in. $H_2O$ |
|---|---|---|---|---|---|---|---|
| Warm $N_2$ | 196,815 | 0.016 | 4.742 | 0.622 | 0.209 | 0.12 | 0.950 |
| Cold $N_2$ | 648,150 | 0.014 | 4.72 | 0.155 | 0.832 | <0.12 | 1.107 |
| Warm Ar | 221,181 | 0.016 | 4.743 | 0.887 | 0.298 | ~0.17 | 1.355 |
| Cold Ar | 706,870 | 0.014 | 4.72 | 0.253 | 1.039 | <0.12 | 1.412 |

Figure 3.5a.1: PAB – Flare ODH Hardware Layout.

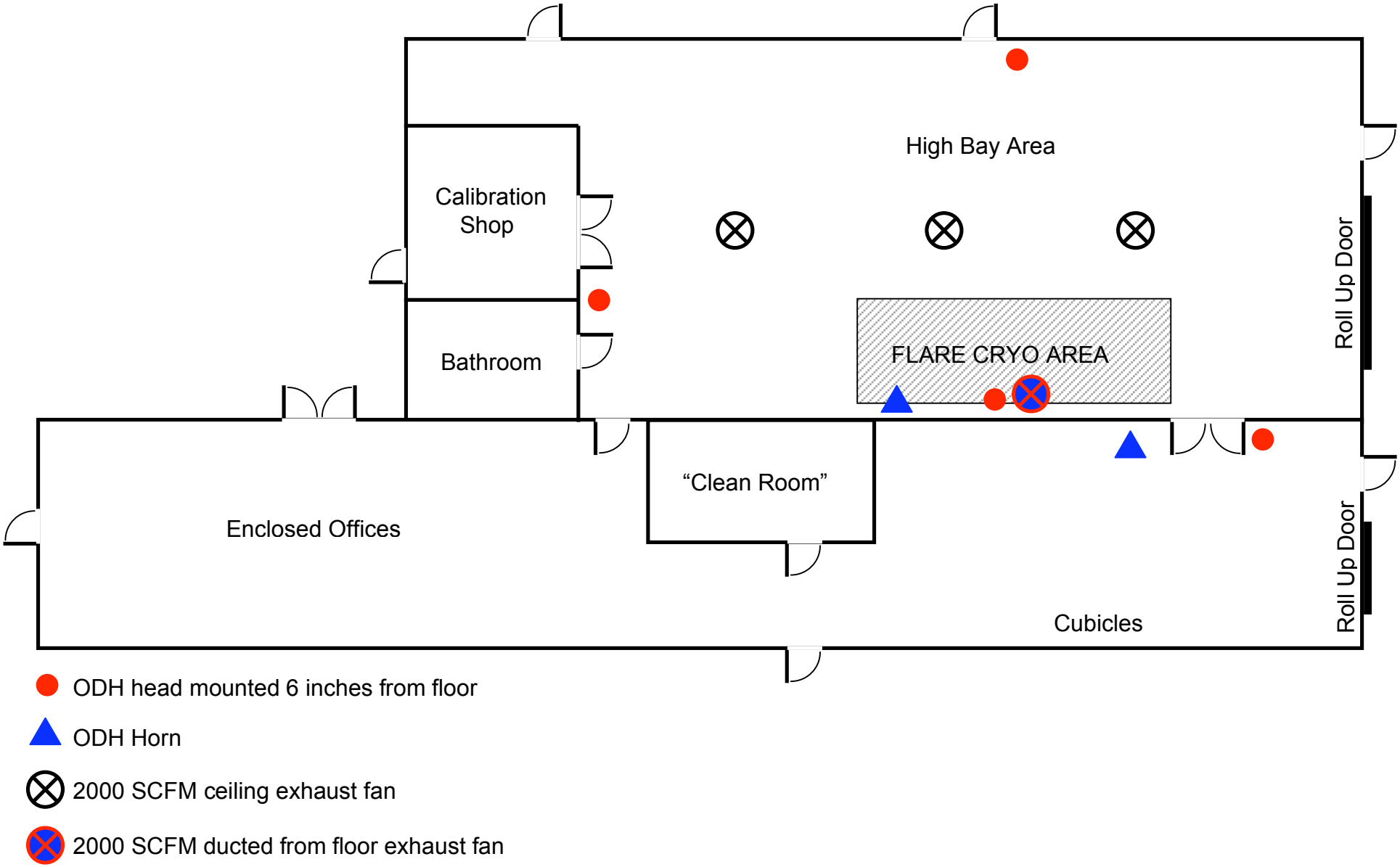

**Table 3.5a.1: PAB ODH Risk Analysis with ventilation running.**

| ITEM | Comment | Type of Failure | # of Items | Pi Fail Rate events/hr | Source of Fail Rate | Group Fail Rate (Pi x #) events/hr | Exhaust fan Availability events/hr | R leak rate SCFM | Q vent rate SCFM | O2 Concentration % | Fi Fatality Factor fatality/event | ϕ=ΣPiFi ODH Rate fatality/hr | |
|---|---|---|---|---|---|---|---|---|---|---|---|---|---|
| **Nitrogen circuit** | | | | | | | | | | | | | |
| LN2 supply piping | < 3" diameter, max flow into PAB | Rupture - severed line | 1 | 1.00E-09 | NRC | 1.00E-09 | 0.9993 | 1198 | 2000 | 8.42 | 1.00E+00 | 9.99E-10 | |
| Condensor | Treat as dewar, 25% pipe diameter | Leak/rupture | 1 | 1.00E-06 | FNAL | 1.00E-06 | 0.9993 | 260 | 2000 | 18.27 | 3.95E-08 | 3.95E-14 | |
| EV-104-N2 | Max flow thru 25% pipe diameter | Leak/rupture | 1 | 1.00E-08 | NRC | 1.00E-08 | 0.9993 | 260 | 2000 | 18.27 | 3.95E-08 | 3.95E-16 | |
| EV-105-N2 | Max flow thru 25% pipe diameter | Leak/rupture | 1 | 1.00E-08 | NRC | 1.00E-08 | 0.9993 | 260 | 2000 | 18.27 | 3.95E-08 | 3.95E-16 | |
| EV-106-N2 | Max flow thru 25% pipe diameter | Leak/rupture | 1 | 1.00E-08 | NRC | 1.00E-08 | 0.9993 | 260 | 2000 | 18.27 | 3.95E-08 | 3.95E-16 | |
| LT-10-N2 | Treat as flange, max flow thru 25% pipe diameter | Leak/rupture | 1 | 3.00E-07 | NRC | 3.00E-07 | 0.9993 | 260 | 2000 | 18.27 | 3.95E-08 | 1.18E-14 | |
| MV-119-N | Max flow thru 25% pipe diameter | Leak/rupture | 1 | 1.00E-08 | NRC | 1.00E-08 | 0.9993 | 260 | 2000 | 18.27 | 3.95E-08 | 3.95E-16 | |
| MV-120-N | Max flow thru 25% pipe diameter | Leak/rupture | 1 | 1.00E-08 | NRC | 1.00E-08 | 0.9993 | 260 | 2000 | 18.27 | 3.95E-08 | 3.95E-16 | |
| PI-44-N2 | Treat as flange, max flow thru 25% pipe diameter | Leak/rupture | 1 | 3.00E-07 | NRC | 3.00E-07 | 0.9993 | 260 | 2000 | 18.27 | 3.95E-08 | 1.18E-14 | |
| PI-133-N2 | Treat as flange, max flow thru 25% pipe diameter | Leak/rupture | 1 | 3.00E-07 | NRC | 3.00E-07 | 0.9993 | 260 | 2000 | 18.27 | 3.95E-08 | 1.18E-14 | |
| PT-1-N2 | Treat as flange, max flow thru 25% pipe diameter | Leak/rupture | 1 | 3.00E-07 | NRC | 3.00E-07 | 0.9993 | 260 | 2000 | 18.27 | 3.95E-08 | 1.18E-14 | |
| PT-27-N2 | Treat as flange, max flow thru 25% pipe diameter | Leak/rupture | 1 | 3.00E-07 | NRC | 3.00E-07 | 0.9993 | 260 | 2000 | 18.27 | 3.95E-08 | 1.18E-14 | |
| PSV-101-N2 | Max flow thru 25% pipe diameter | Leak/rupture | 1 | 1.00E-08 | NRC | 1.00E-08 | 0.9993 | 260 | 2000 | 18.27 | 3.95E-08 | 3.95E-16 | |
| PSV-101-N2 | Max flow thru 25% pipe diameter | Leak/rupture | 1 | 1.00E-08 | NRC | 1.00E-08 | 0.9993 | 260 | 2000 | 18.27 | 3.95E-08 | 3.95E-16 | |
| PSV-101-N2 | Max flow thru 25% pipe diameter | Leak/rupture | 1 | 1.00E-08 | NRC | 1.00E-08 | 0.9993 | 260 | 2000 | 18.27 | 3.95E-08 | 3.95E-16 | |
| TE-6-N2 | Treat as flange, max flow thru 25% pipe diameter | Leak/rupture | 1 | 3.00E-07 | NRC | 3.00E-07 | 0.9993 | 260 | 2000 | 18.27 | 3.95E-08 | 1.18E-14 | |
| SV-117-N2 | Max flow thru 25% pipe diameter | Leak/rupture | 1 | 1.00E-08 | NRC | 1.00E-08 | 0.9993 | 260 | 2000 | 18.27 | 3.95E-08 | 3.95E-16 | |
| Welds | Max flow thru 25% pipe diameter | Leak/rupture | 50 | 3.00E-09 | NRC | 1.50E-07 | 0.9993 | 260 | 2000 | 18.27 | 3.95E-08 | 5.92E-15 | |
| Flanges | Max flow thru 25% pipe diameter | Leak/rupture | 10 | 3.00E-07 | NRC | 3.00E-06 | 0.9993 | 260 | 2000 | 18.27 | 3.95E-08 | 1.18E-13 | |
| LN2 vent piping | Max flow thru 25% pipe diameter | Leak/rupture | 1 | 1.00E-09 | NRC | 1.00E-09 | 0.9993 | 260 | 2000 | 18.27 | 3.95E-08 | 3.95E-17 | |
| **Argon Circuit** | | | | | | | | | | | | | |
| LAr supply piping | < 3" diameter, max flow into PAB | Rupture - severed line | 1 | 1.00E-09 | NRC | 1.00E-09 | 0.9993 | 6572 | 2000 | 18.1 | 5.32E-08 | 5.32E-17 | * |
| LAr supply dewar reliefs | Max flow thru relief valve | Premature open | 4 | 1.00E-05 | NRC | 4.00E-05 | 0.9993 | 68.1 | 2000 | 20.28 | 1.16E-09 | 4.63E-14 | |
| PSV-203-Ar | Max flow thru 25% pipe diameter | Leak/rupture | 1 | 1.00E-08 | NRC | 1.00E-08 | 0.9993 | 433 | 2000 | 18.1 | 5.32E-08 | 5.32E-16 | * |
| MV-204-Ar | Max flow thru valve (Cv = 1.2) | Valve left wide open | 1 | 1.74E-05 | 33 x 5064 TBL 3 | 1.74E-05 | 0.9993 | 1825 | 2000 | 18.1 | 5.32E-08 | 9.26E-13 | * |
| MV-204-Ar | Max flow thru 25% pipe diameter | Leak/rupture | 1 | 1.00E-08 | NRC | 1.00E-08 | 0.9993 | 433 | 2000 | 18.1 | 5.32E-08 | 5.32E-16 | * |
| MV-213-Ar | Max flow thru 25% pipe diameter | Leak/rupture | 1 | 1.00E-08 | NRC | 1.00E-08 | 0.9993 | 433 | 2000 | 18.1 | 5.32E-08 | 5.32E-16 | * |
| MV-218-Ar | Max flow thru valve (Cv = 1.2) | Valve left wide open | 1 | 1.74E-05 | 33 x 5064 TBL 3 | 1.74E-05 | 0.9993 | 1825 | 2000 | 18.1 | 5.32E-08 | 9.26E-13 | * |
| MV-218-Ar | Max flow thru 25% pipe diameter | Leak/rupture | 1 | 1.00E-08 | NRC | 1.00E-08 | 0.9993 | 433 | 2000 | 18.1 | 5.32E-08 | 5.32E-16 | * |
| PSV-219-Ar | Max flow thru 25% pipe diameter | Leak/rupture | 1 | 1.00E-08 | NRC | 1.00E-08 | 0.9993 | 433 | 2000 | 18.1 | 5.32E-08 | 5.32E-16 | * |
| MV-217-Ar | Max flow thru 25% pipe diameter | Leak/rupture | 1 | 1.00E-08 | NRC | 1.00E-08 | 0.9993 | 433 | 2000 | 18.1 | 5.32E-08 | 5.32E-16 | * |
| MV-365-V | Max flow thru 25% pipe diameter | Leak/rupture | 1 | 1.00E-08 | NRC | 1.00E-08 | 0.9993 | 433 | 2000 | 18.1 | 5.32E-08 | 5.32E-16 | * |
| MV-366-V | Max flow thru 25% pipe diameter | Leak/rupture | 1 | 1.00E-08 | NRC | 1.00E-08 | 0.9993 | 433 | 2000 | 18.1 | 5.32E-08 | 5.32E-16 | * |
| MV-365-V | Max flow thru valve (Cv = 1.2) | Valve left wide open | 1 | 1.74E-05 | 33 x 5064 TBL 3 | 1.74E-05 | 0.9993 | 1825 | 2000 | 18.1 | 5.32E-08 | 9.26E-13 | * |
| MV-366-V | Max flow thru valve (Cv = 1.2) | Valve left wide open | 1 | 1.74E-05 | 33 x 5064 TBL 3 | 1.74E-05 | 0.9993 | 1825 | 2000 | 18.1 | 5.32E-08 | 9.26E-13 | * |
| MV-480-HAr | Max flow thru 25% pipe diameter | Leak/rupture | 1 | 1.00E-08 | NRC | 1.00E-08 | 0.9993 | 433 | 2000 | 18.1 | 5.32E-08 | 5.32E-16 | * |
| MV-461-HAr | Max flow thru 25% pipe diameter | Leak/rupture | 1 | 1.00E-08 | NRC | 1.00E-08 | 0.9993 | 433 | 2000 | 18.1 | 5.32E-08 | 5.32E-16 | * |
| PSV-250-Ar | Max flow thru 25% pipe diameter | Leak/rupture | 1 | 1.00E-08 | NRC | 1.00E-08 | 0.9993 | 433 | 2000 | 18.1 | 5.32E-08 | 5.32E-16 | * |
| PSV-249-Ar | Max flow thru 25% pipe diameter | Leak/rupture | 1 | 1.00E-08 | NRC | 1.00E-08 | 0.9993 | 433 | 2000 | 18.1 | 5.32E-08 | 5.32E-16 | * |
| MV-202-Ar | Max flow thru 25% pipe diameter | Leak/rupture | 1 | 1.00E-08 | NRC | 1.00E-08 | 0.9993 | 433 | 2000 | 18.1 | 5.32E-08 | 5.32E-16 | * |
| MV-208-Ar | Max flow thru 25% pipe diameter | Leak/rupture | 1 | 1.00E-08 | NRC | 1.00E-08 | 0.9993 | 433 | 2000 | 18.1 | 5.32E-08 | 5.32E-16 | * |
| MV-239-Ar | Max flow thru 25% pipe diameter | Leak/rupture | 1 | 1.00E-08 | NRC | 1.00E-08 | 0.9993 | 433 | 2000 | 18.1 | 5.32E-08 | 5.32E-16 | * |
| MV-244-Ar | Max flow thru 25% pipe diameter | Leak/rupture | 1 | 1.00E-08 | NRC | 1.00E-08 | 0.9993 | 433 | 2000 | 18.1 | 5.32E-08 | 5.32E-16 | * |
| MV-370-Ar | Max flow thru 25% pipe diameter | Leak/rupture | 1 | 1.00E-08 | NRC | 1.00E-08 | 0.9993 | 433 | 2000 | 18.1 | 5.32E-08 | 5.32E-16 | * |
| LT-13-Ar | Treat as flange, max flow into cryostat | Leak/rupture | 1 | 3.00E-07 | NRC | 3.00E-07 | 0.9993 | 232 | 2000 | 18.56 | 2.36E-08 | 7.07E-15 | |
| MV-360-V | Max flow into cryostat | Leak/rupture | 1 | 1.00E-08 | NRC | 1.00E-08 | 0.9993 | 232 | 2000 | 18.56 | 2.36E-08 | 2.36E-16 | |
| MV-360-V | Max flow into cryostat | Valve left wide open | 1 | 1.74E-05 | 33 x 5064 TBL 3 | 1.74E-05 | 0.9993 | 232 | 2000 | 18.56 | 2.36E-08 | 4.10E-13 | |
| MV-241-Ar | Max flow into cryostat | Leak/rupture | 1 | 1.00E-08 | NRC | 1.00E-08 | 0.9993 | 232 | 2000 | 18.56 | 2.36E-08 | 2.36E-16 | |
| MV-247-Ar | Max flow into cryostat | Leak/rupture | 1 | 1.00E-08 | NRC | 1.00E-08 | 0.9993 | 232 | 2000 | 18.56 | 2.36E-08 | 2.36E-16 | |
| MV-248-Ar | Max flow into cryostat | Leak/rupture | 1 | 1.00E-08 | NRC | 1.00E-08 | 0.9993 | 232 | 2000 | 18.56 | 2.36E-08 | 2.36E-16 | |
| DPT-67-Ar | Treat as flange, max flow into cryostat | Leak/rupture | 1 | 3.00E-07 | NRC | 3.00E-07 | 0.9993 | 232 | 2000 | 18.56 | 2.36E-08 | 7.07E-15 | |
| DPT-153-Ar | Treat as flange, max flow into cryostat | Leak/rupture | 1 | 3.00E-07 | NRC | 3.00E-07 | 0.9993 | 232 | 2000 | 18.56 | 2.36E-08 | 7.07E-15 | |
| MV-248-Ar | Max flow into cryostat | Leak/rupture | 1 | 1.00E-08 | NRC | 1.00E-08 | 0.9993 | 232 | 2000 | 18.56 | 2.36E-08 | 2.36E-16 | |
| EP-307-Ar | Max flow into cryostat | Leak/rupture | 1 | 1.00E-08 | NRC | 1.00E-08 | 0.9993 | 232 | 2000 | 18.56 | 2.36E-08 | 2.36E-16 | |
| EP-78-Ar | Max flow into cryostat | Leak/rupture | 1 | 1.00E-08 | NRC | 1.00E-08 | 0.9993 | 232 | 2000 | 18.56 | 2.36E-08 | 2.36E-16 | |
| PSV-156-Ar | Max flow into cryostat | Leak/rupture | 1 | 1.00E-08 | NRC | 1.00E-08 | 0.9993 | 232 | 2000 | 18.56 | 2.36E-08 | 2.36E-16 | |
| MV-242-Ar | Max flow into cryostat | Leak/rupture | 1 | 1.00E-08 | NRC | 1.00E-08 | 0.9993 | 232 | 2000 | 18.56 | 2.36E-08 | 2.36E-16 | |
| PI-243-Ar | Treat as flange, max flow into cryostat | Leak/rupture | 1 | 3.00E-07 | NRC | 3.00E-07 | 0.9993 | 232 | 2000 | 18.56 | 2.36E-08 | 7.07E-15 | |
| MV-246-Ar | Max flow into cryostat | Leak/rupture | 1 | 1.00E-08 | NRC | 1.00E-08 | 0.9993 | 232 | 2000 | 18.56 | 2.36E-08 | 2.36E-16 | |
| MV-128-Ar | Max flow into cryostat | Leak/rupture | 1 | 1.00E-08 | NRC | 1.00E-08 | 0.9993 | 232 | 2000 | 18.56 | 2.36E-08 | 2.36E-16 | |
| PSV-136-Ar | Max flow into cryostat | Leak/rupture | 1 | 1.00E-08 | NRC | 1.00E-08 | 0.9993 | 232 | 2000 | 18.56 | 2.36E-08 | 2.36E-16 | |
| MV-132-N2 | Max flow into cryostat | Leak/rupture | 1 | 1.00E-08 | NRC | 1.00E-08 | 0.9993 | 232 | 2000 | 18.56 | 2.36E-08 | 2.36E-16 | |
| MV-132-N2 | Max flow into cryostat | Valve left wide open | 1 | 1.74E-05 | 33 x 5064 TBL 3 | 1.74E-05 | 0.9993 | 232 | 2000 | 18.56 | 2.36E-08 | 4.10E-13 | |
| MV-131-N2 | Max flow into cryostat | Leak/rupture | 1 | 1.00E-08 | NRC | 1.00E-08 | 0.9993 | 232 | 2000 | 18.56 | 2.36E-08 | 2.36E-16 | |
| MV-127-Ar | Max flow into cryostat | Leak/rupture | 1 | 1.00E-08 | NRC | 1.00E-08 | 0.9993 | 232 | 2000 | 18.56 | 2.36E-08 | 2.36E-16 | |
| MV-251-V | Max flow into cryostat | Leak/rupture | 1 | 1.00E-08 | NRC | 1.00E-08 | 0.9993 | 232 | 2000 | 18.56 | 2.36E-08 | 2.36E-16 | |
| MV-252-V | Max flow into cryostat | Valve left wide open | 1 | 1.74E-05 | 33 x 5064 TBL 3 | 1.74E-05 | 0.9993 | 232 | 2000 | 18.56 | 2.36E-08 | 4.10E-13 | |
| MV-252-Ar | Max flow into cryostat | Leak/rupture | 1 | 1.00E-08 | NRC | 1.00E-08 | 0.9993 | 232 | 2000 | 18.56 | 2.36E-08 | 2.36E-16 | |
| MV-253-Ar | Max flow into cryostat | Leak/rupture | 1 | 1.00E-08 | NRC | 1.00E-08 | 0.9993 | 232 | 2000 | 18.56 | 2.36E-08 | 2.36E-16 | |
| MV-290-Ar | Max flow into cryostat | Leak/rupture | 1 | 1.00E-08 | NRC | 1.00E-08 | 0.9993 | 232 | 2000 | 18.56 | 2.36E-08 | 2.36E-16 | |
| MV-254-V | Max flow into cryostat | Leak/rupture | 1 | 1.00E-08 | NRC | 1.00E-08 | 0.9993 | 232 | 2000 | 18.56 | 2.36E-08 | 2.36E-16 | |
| PT-185-V | Treat as flange, max flow into cryostat | Leak/rupture | 1 | 3.00E-07 | NRC | 3.00E-07 | 0.9993 | 232 | 2000 | 18.56 | 2.36E-08 | 7.07E-15 | |
| PT-186-V | Treat as flange, max flow into cryostat | Leak/rupture | 1 | 3.00E-07 | NRC | 3.00E-07 | 0.9993 | 232 | 2000 | 18.56 | 2.36E-08 | 7.07E-15 | |
| MV-256-Ar | Max flow into cryostat | Leak/rupture | 1 | 1.00E-08 | NRC | 1.00E-08 | 0.9993 | 232 | 2000 | 18.56 | 2.36E-08 | 2.36E-16 | |
| CV-256-Ar | Max flow into cryostat | Leak/rupture | 1 | 1.00E-08 | NRC | 1.00E-08 | 0.9993 | 232 | 2000 | 18.56 | 2.36E-08 | 2.36E-16 | |
| MV-291-Ar | Max flow into cryostat | Leak/rupture | 1 | 1.00E-08 | NRC | 1.00E-08 | 0.9993 | 232 | 2000 | 18.56 | 2.36E-08 | 2.36E-16 | |
| MV-294-Ar | Max flow into cryostat | Leak/rupture | 1 | 1.00E-08 | NRC | 1.00E-08 | 0.9993 | 232 | 2000 | 18.56 | 2.36E-08 | 2.36E-16 | |
| MV-295-V | Max flow into cryostat | Leak/rupture | 1 | 1.00E-08 | NRC | 1.00E-08 | 0.9993 | 232 | 2000 | 18.56 | 2.36E-08 | 2.36E-16 | |
| MV-296-Ar | Max flow into cryostat | Leak/rupture | 1 | 1.00E-08 | NRC | 1.00E-08 | 0.9993 | 232 | 2000 | 18.56 | 2.36E-08 | 2.36E-16 | |
| PI-12-Ar | Treat as flange, max flow into cryostat | Leak/rupture | 1 | 3.00E-07 | NRC | 3.00E-07 | 0.9993 | 232 | 2000 | 18.56 | 2.36E-08 | 7.07E-15 | |
| PT-19-V | Treat as flange, max flow into cryostat | Leak/rupture | 1 | 3.00E-07 | NRC | 3.00E-07 | 0.9993 | 232 | 2000 | 18.56 | 2.36E-08 | 7.07E-15 | |
| PSV-210-Ar | Max flow into cryostat | Leak/rupture | 1 | 1.00E-08 | NRC | 1.00E-08 | 0.9993 | 232 | 2000 | 18.56 | 2.36E-08 | 2.36E-16 | |
| PT-11-Ar | Treat as flange, max flow into cryostat | Leak/rupture | 1 | 3.00E-07 | NRC | 3.00E-07 | 0.9993 | 232 | 2000 | 18.56 | 2.36E-08 | 7.07E-15 | |
| PT-33-V | Treat as flange, max flow into cryostat | Leak/rupture | 1 | 3.00E-07 | NRC | 3.00E-07 | 0.9993 | 232 | 2000 | 18.56 | 2.36E-08 | 7.07E-15 | |
| MV-255-Ar | Max flow into cryostat | Leak/rupture | 1 | 1.00E-08 | NRC | 1.00E-08 | 0.9993 | 232 | 2000 | 18.56 | 2.36E-08 | 2.36E-16 | |
| EP-205-Ar | Max flow into cryostat | Leak/rupture | 1 | 1.00E-08 | NRC | 1.00E-08 | 0.9993 | 232 | 2000 | 18.56 | 2.36E-08 | 2.36E-16 | |
| RD-302-V | Max flow into cryostat | Premature Open | 1 | 1.00E-05 | NRC | 1.00E-05 | 0.9993 | 232 | 2000 | 18.56 | 2.36E-08 | 2.36E-13 | |
| PSV-313-Ar | Max flow into cryostat | Leak/rupture | 1 | 1.00E-08 | NRC | 1.00E-08 | 0.9993 | 232 | 2000 | 18.56 | 2.36E-08 | 2.36E-16 | |
| Luke Cryostat | Treat as dewar, max flow into cryostat | Leak/rupture | 1 | 1.00E-06 | FNAL | 1.00E-06 | 0.9993 | 232 | 2000 | 18.56 | 2.36E-08 | 2.36E-14 | |
| Welds | Max flow thru 25% pipe diameter | Leak/rupture | 100 | 3.00E-09 | NRC | 3.00E-07 | 0.9993 | 433 | 2000 | 17.0 | 3.66E-07 | 1.10E-13 | * |
| Flanges | Max flow thru 25% pipe diameter | Leak/rupture | 20 | 3.00E-07 | NRC | 6.00E-06 | 0.9993 | 433 | 2000 | 17.0 | 3.66E-07 | 2.19E-12 | * |
| LAr vent piping | Max flow into cryostat | Leak/rupture | 1 | 1.00E-09 | NRC | 1.00E-09 | 0.9993 | 232 | 2000 | 18.56 | 2.36E-08 | 2.36E-17 | |
| | | | | | **SUM** | **1.89E-04** | | | | | | | |
| | | | | | | | | | | | **SUM** | **1.01E-09** | |

* Denotes that the minimum O2 concentration is equal to the amount of cryogens present because the leak rate creates a minimum O2 concentration that exceeds the amount of cryogens present.

**Table 3.5a.2: PAB ODH Risk Analysis with NO ventilation running.**

| ITEM | Comment | Type of Failure | # of Items | Pi Fail Rate events/hr | Source of Fail Rate | Group Fail Rate (Pi x #) events/hr | Fan Availability Rate events/hr | R leak rate SCFM | Q vent rate SCFM | O2 Concentration % | Fi Fatality Factor fatality/event | ϕ=ΣPiFi ODH Rate fatality/hr |
|---|---|---|---|---|---|---|---|---|---|---|---|---|
| **Nitrogen circuit** | | | | | | | | | | | | |
| LN2 supply piping | < 3" diameter, max flow into PAB | Rupture - severed line | 1 | 1.00E-09 | NRC | 1.00E-09 | 7.00E-04 | 1198 | 0 | 0 | 1.00E+00 | 7.00E-13 |
| Condensor | Treat as dewar, 25% pipe diameter | Leak/rupture | 1 | 1.00E-06 | FNAL | 1.00E-06 | 7.00E-04 | 260 | 0 | 0 | 1.00E+00 | 7.00E-10 |
| EV-104-N2 | Max flow thru 25% pipe diameter | Leak/rupture | 1 | 1.00E-08 | NRC | 1.00E-08 | 7.00E-04 | 260 | 0 | 0 | 1.00E+00 | 7.00E-12 |
| EV-105-N2 | Max flow thru 25% pipe diameter | Leak/rupture | 1 | 1.00E-08 | NRC | 1.00E-08 | 7.00E-04 | 260 | 0 | 0 | 1.00E+00 | 7.00E-12 |
| EV-106-N2 | Max flow thru 25% pipe diameter | Leak/rupture | 1 | 1.00E-08 | NRC | 1.00E-08 | 7.00E-04 | 260 | 0 | 0 | 1.00E+00 | 7.00E-12 |
| LT-10-N2 | Treat as flange, max flow thru 25% pipe diameter | Leak/rupture | 1 | 3.00E-07 | NRC | 3.00E-07 | 7.00E-04 | 260 | 0 | 0 | 1.00E+00 | 2.10E-10 |
| MV-119-N | Max flow thru 25% pipe diameter | Leak/rupture | 1 | 1.00E-08 | NRC | 1.00E-08 | 7.00E-04 | 260 | 0 | 0 | 1.00E+00 | 7.00E-12 |
| MV-120-N | Max flow thru 25% pipe diameter | Leak/rupture | 1 | 1.00E-08 | NRC | 1.00E-08 | 7.00E-04 | 260 | 0 | 0 | 1.00E+00 | 7.00E-12 |
| PI-44-N2 | Treat as flange, max flow thru 25% pipe diameter | Leak/rupture | 1 | 3.00E-07 | NRC | 3.00E-07 | 7.00E-04 | 260 | 0 | 0 | 1.00E+00 | 2.10E-10 |
| PI-133-N2 | Treat as flange, max flow thru 25% pipe diameter | Leak/rupture | 1 | 3.00E-07 | NRC | 3.00E-07 | 7.00E-04 | 260 | 0 | 0 | 1.00E+00 | 2.10E-10 |
| PT-1-N2 | Treat as flange, max flow thru 25% pipe diameter | Leak/rupture | 1 | 3.00E-07 | NRC | 3.00E-07 | 7.00E-04 | 260 | 0 | 0 | 1.00E+00 | 2.10E-10 |
| PT-27-N2 | Treat as flange, max flow thru 25% pipe diameter | Leak/rupture | 1 | 3.00E-07 | NRC | 3.00E-07 | 7.00E-04 | 260 | 0 | 0 | 1.00E+00 | 2.10E-10 |
| PSV-101-N2 | Max flow thru 25% pipe diameter | Leak/rupture | 1 | 1.00E-08 | NRC | 1.00E-08 | 7.00E-04 | 260 | 0 | 0 | 1.00E+00 | 7.00E-12 |
| PSV-101-N2 | Max flow thru 25% pipe diameter | Leak/rupture | 1 | 1.00E-08 | NRC | 1.00E-08 | 7.00E-04 | 260 | 0 | 0 | 1.00E+00 | 7.00E-12 |
| PSV-101-N2 | Max flow thru 25% pipe diameter | Leak/rupture | 1 | 1.00E-08 | NRC | 1.00E-08 | 7.00E-04 | 260 | 0 | 0 | 1.00E+00 | 7.00E-12 |
| TE-6-N2 | Treat as flange, max flow thru 25% pipe diameter | Leak/rupture | 1 | 3.00E-07 | NRC | 3.00E-07 | 7.00E-04 | 260 | 0 | 0 | 1.00E+00 | 2.10E-10 |
| SV-117-N2 | Max flow thru 25% pipe diameter | Leak/rupture | 1 | 1.00E-08 | NRC | 1.00E-08 | 7.00E-04 | 260 | 0 | 0 | 1.00E+00 | 7.00E-12 |
| Welds | Max flow thru 25% pipe diameter | Leak/rupture | 50 | 3.00E-09 | NRC | 1.50E-07 | 7.00E-04 | 260 | 0 | 0 | 1.00E+00 | 1.05E-10 |
| Flanges | Max flow thru 25% pipe diameter | Leak/rupture | 10 | 3.00E-07 | NRC | 3.00E-06 | 7.00E-04 | 260 | 0 | 0 | 1.00E+00 | 2.10E-09 |
| LN2 vent piping | Max flow thru 25% pipe diameter | Leak/rupture | 1 | 1.00E-09 | NRC | 1.00E-09 | 7.00E-04 | 260 | 0 | 0 | 1.00E+00 | 7.00E-13 |
| **Argon Circuit** | | | | | | | | | | | | |
| LAr supply piping | < 3" diameter, max flow into PAB | Rupture - severed line | 1 | 1.00E-09 | NRC | 1.00E-09 | 7.00E-04 | 6572 | 0 | 18.1 | 5.32E-08 | 5.32E-17 |
| LAr supply dewar reliefs | Max flow thru relief valve | Premature open | 4 | 1.00E-05 | NRC | 4.00E-05 | 7.00E-04 | 68.1 | 0 | 18.1 | 5.32E-08 | 2.13E-12 |
| PSV-203-Ar | Max flow thru 25% pipe diameter | Leak/rupture | 1 | 1.00E-08 | NRC | 1.00E-08 | 7.00E-04 | 433 | 0 | 18.1 | 5.32E-08 | 3.72E-19 |
| MV-204-Ar | Max flow thru valve (Cv = 1.2) | Valve left wide open | 1 | 1.74E-05 | 33 x 5064 TBL 3 | 1.74E-05 | 7.00E-04 | 1825 | 0 | 18.1 | 5.32E-08 | 9.26E-13 |
| MV-204-Ar | Max flow thru 25% pipe diameter | Leak/rupture | 1 | 1.00E-08 | NRC | 1.00E-08 | 7.00E-04 | 433 | 0 | 18.1 | 5.32E-08 | 3.72E-19 |
| MV-213-Ar | Max flow thru 25% pipe diameter | Leak/rupture | 1 | 1.00E-08 | NRC | 1.00E-08 | 7.00E-04 | 433 | 0 | 18.1 | 5.32E-08 | 3.72E-19 |
| MV-218-Ar | Max flow thru valve (Cv = 1.2) | Valve left wide open | 1 | 1.74E-05 | 33 x 5064 TBL 3 | 1.74E-05 | 7.00E-04 | 1825 | 0 | 18.1 | 5.32E-08 | 9.26E-13 |
| MV-218-Ar | Max flow thru 25% pipe diameter | Leak/rupture | 1 | 1.00E-08 | NRC | 1.00E-08 | 7.00E-04 | 433 | 0 | 18.1 | 5.32E-08 | 3.72E-19 |
| PSV-219-Ar | Max flow thru 25% pipe diameter | Leak/rupture | 1 | 1.00E-08 | NRC | 1.00E-08 | 7.00E-04 | 433 | 0 | 18.1 | 5.32E-08 | 3.72E-19 |
| MV-217-Ar | Max flow thru 25% pipe diameter | Leak/rupture | 1 | 1.00E-08 | NRC | 1.00E-08 | 7.00E-04 | 433 | 0 | 18.1 | 5.32E-08 | 3.72E-19 |
| MV-365-V | Max flow thru 25% pipe diameter | Leak/rupture | 1 | 1.00E-08 | NRC | 1.00E-08 | 7.00E-04 | 433 | 0 | 18.1 | 5.32E-08 | 3.72E-19 |
| MV-366-V | Max flow thru 25% pipe diameter | Leak/rupture | 1 | 1.00E-08 | NRC | 1.00E-08 | 7.00E-04 | 433 | 0 | 18.1 | 5.32E-08 | 3.72E-19 |
| MV-365-V | Max flow thru valve (Cv = 1.2) | Valve left wide open | 1 | 1.74E-05 | 33 x 5064 TBL 3 | 1.74E-05 | 7.00E-04 | 1825 | 0 | 18.1 | 5.32E-08 | 9.26E-13 |
| MV-366-V | Max flow thru valve (Cv = 1.2) | Valve left wide open | 1 | 1.74E-05 | 33 x 5064 TBL 3 | 1.74E-05 | 7.00E-04 | 1825 | 0 | 18.1 | 5.32E-08 | 9.26E-13 |
| MV-480-HAr | Max flow thru 25% pipe diameter | Leak/rupture | 1 | 1.00E-08 | NRC | 1.00E-08 | 7.00E-04 | 433 | 0 | 18.1 | 5.32E-08 | 3.72E-19 |
| MV-461-HAr | Max flow thru 25% pipe diameter | Leak/rupture | 1 | 1.00E-08 | NRC | 1.00E-08 | 7.00E-04 | 433 | 0 | 18.1 | 5.32E-08 | 3.72E-19 |
| PSV-250-Ar | Max flow thru 25% pipe diameter | Leak/rupture | 1 | 1.00E-08 | NRC | 1.00E-08 | 7.00E-04 | 433 | 0 | 18.1 | 5.32E-08 | 3.72E-19 |
| PSV-249-Ar | Max flow thru 25% pipe diameter | Leak/rupture | 1 | 1.00E-08 | NRC | 1.00E-08 | 7.00E-04 | 433 | 0 | 18.1 | 5.32E-08 | 3.72E-19 |
| MV-202-Ar | Max flow thru 25% pipe diameter | Leak/rupture | 1 | 1.00E-08 | NRC | 1.00E-08 | 7.00E-04 | 433 | 0 | 18.1 | 5.32E-08 | 3.72E-19 |
| MV-208-Ar | Max flow thru 25% pipe diameter | Leak/rupture | 1 | 1.00E-08 | NRC | 1.00E-08 | 7.00E-04 | 433 | 0 | 18.1 | 5.32E-08 | 3.72E-19 |
| MV-239-Ar | Max flow thru 25% pipe diameter | Leak/rupture | 1 | 1.00E-08 | NRC | 1.00E-08 | 7.00E-04 | 433 | 0 | 18.1 | 5.32E-08 | 3.72E-19 |
| MV-244-Ar | Max flow thru 25% pipe diameter | Leak/rupture | 1 | 1.00E-08 | NRC | 1.00E-08 | 7.00E-04 | 433 | 0 | 18.1 | 5.32E-08 | 3.72E-19 |
| MV-370-Ar | Max flow thru 25% pipe diameter | Leak/rupture | 1 | 1.00E-08 | NRC | 1.00E-08 | 7.00E-04 | 433 | 0 | 18.1 | 5.32E-08 | 3.72E-19 |
| LT-13-Ar | Treat as flange, max flow into cryostat | Leak/rupture | 1 | 3.00E-07 | NRC | 3.00E-07 | 7.00E-04 | 232 | 0 | 17.1 | 3.07E-07 | 6.44E-17 |
| MV-360-V | Max flow into cryostat | Leak/rupture | 1 | 1.00E-08 | NRC | 1.00E-08 | 7.00E-04 | 232 | 0 | 17.1 | 3.07E-07 | 2.15E-18 |
| MV-360-V | Max flow into cryostat | Valve left wide open | 1 | 1.74E-05 | 33 x 5064 TBL 3 | 1.74E-05 | 7.00E-04 | 232 | 0 | 17.1 | 3.07E-07 | 3.74E-15 |
| MV-241-Ar | Max flow into cryostat | Leak/rupture | 1 | 1.00E-08 | NRC | 1.00E-08 | 7.00E-04 | 232 | 0 | 17.1 | 3.07E-07 | 2.15E-18 |
| MV-247-Ar | Max flow into cryostat | Leak/rupture | 1 | 1.00E-08 | NRC | 1.00E-08 | 7.00E-04 | 232 | 0 | 17.1 | 3.07E-07 | 2.15E-18 |
| MV-248-Ar | Max flow into cryostat | Leak/rupture | 1 | 1.00E-08 | NRC | 1.00E-08 | 7.00E-04 | 232 | 0 | 17.1 | 3.07E-07 | 2.15E-18 |
| DPT-67-Ar | Treat as flange, max flow into cryostat | Leak/rupture | 1 | 3.00E-07 | NRC | 3.00E-07 | 7.00E-04 | 232 | 0 | 17.1 | 3.07E-07 | 6.44E-17 |
| DPT-153-Ar | Treat as flange, max flow into cryostat | Leak/rupture | 1 | 3.00E-07 | NRC | 3.00E-07 | 7.00E-04 | 232 | 0 | 17.1 | 3.07E-07 | 6.44E-17 |
| MV-248-Ar | Max flow into cryostat | Leak/rupture | 1 | 1.00E-08 | NRC | 1.00E-08 | 7.00E-04 | 232 | 0 | 17.1 | 3.07E-07 | 2.15E-18 |
| EP-307-Ar | Max flow into cryostat | Leak/rupture | 1 | 1.00E-08 | NRC | 1.00E-08 | 7.00E-04 | 232 | 0 | 17.1 | 3.07E-07 | 2.15E-18 |
| EP-78-Ar | Max flow into cryostat | Leak/rupture | 1 | 1.00E-08 | NRC | 1.00E-08 | 7.00E-04 | 232 | 0 | 17.1 | 3.07E-07 | 2.15E-18 |
| PSV-156-Ar | Max flow into cryostat | Leak/rupture | 1 | 1.00E-08 | NRC | 1.00E-08 | 7.00E-04 | 232 | 0 | 17.1 | 3.07E-07 | 2.15E-18 |
| MV-242-Ar | Max flow into cryostat | Leak/rupture | 1 | 1.00E-08 | NRC | 1.00E-08 | 7.00E-04 | 232 | 0 | 17.1 | 3.07E-07 | 2.15E-18 |
| PI-243-Ar | Treat as flange, max flow into cryostat | Leak/rupture | 1 | 3.00E-07 | NRC | 3.00E-07 | 7.00E-04 | 232 | 0 | 17.1 | 3.07E-07 | 6.44E-17 |
| MV-246-Ar | Max flow into cryostat | Leak/rupture | 1 | 1.00E-08 | NRC | 1.00E-08 | 7.00E-04 | 232 | 0 | 17.1 | 3.07E-07 | 2.15E-18 |
| MV-128-Ar | Max flow into cryostat | Leak/rupture | 1 | 1.00E-08 | NRC | 1.00E-08 | 7.00E-04 | 232 | 0 | 17.1 | 3.07E-07 | 2.15E-18 |
| PSV-136-Ar | Max flow into cryostat | Leak/rupture | 1 | 1.00E-08 | NRC | 1.00E-08 | 7.00E-04 | 232 | 0 | 17.1 | 3.07E-07 | 2.15E-18 |
| MV-132-N2 | Max flow into cryostat | Leak/rupture | 1 | 1.00E-08 | NRC | 1.00E-08 | 7.00E-04 | 232 | 0 | 17.1 | 3.07E-07 | 2.15E-18 |
| MV-132-N2 | Max flow into cryostat | Valve left wide open | 1 | 1.74E-05 | 33 x 5064 TBL 3 | 1.74E-05 | 7.00E-04 | 232 | 0 | 17.1 | 3.07E-07 | 3.74E-15 |
| MV-131-N2 | Max flow into cryostat | Leak/rupture | 1 | 1.00E-08 | NRC | 1.00E-08 | 7.00E-04 | 232 | 0 | 17.1 | 3.07E-07 | 2.15E-18 |
| MV-127-Ar | Max flow into cryostat | Leak/rupture | 1 | 1.00E-08 | NRC | 1.00E-08 | 7.00E-04 | 232 | 0 | 17.1 | 3.07E-07 | 2.15E-18 |
| MV-251-V | Max flow into cryostat | Leak/rupture | 1 | 1.00E-08 | NRC | 1.00E-08 | 7.00E-04 | 232 | 0 | 17.1 | 3.07E-07 | 2.15E-18 |
| MV-252-V | Max flow into cryostat | Valve left wide open | 1 | 1.74E-05 | 33 x 5064 TBL 3 | 1.74E-05 | 7.00E-04 | 232 | 0 | 17.1 | 3.07E-07 | 3.74E-15 |
| MV-252-Ar | Max flow into cryostat | Leak/rupture | 1 | 1.00E-08 | NRC | 1.00E-08 | 7.00E-04 | 232 | 0 | 17.1 | 3.07E-07 | 2.15E-18 |
| MV-253-Ar | Max flow into cryostat | Leak/rupture | 1 | 1.00E-08 | NRC | 1.00E-08 | 7.00E-04 | 232 | 0 | 17.1 | 3.07E-07 | 2.15E-18 |
| MV-290-Ar | Max flow into cryostat | Leak/rupture | 1 | 1.00E-08 | NRC | 1.00E-08 | 7.00E-04 | 232 | 0 | 17.1 | 3.07E-07 | 2.15E-18 |
| MV-254-V | Max flow into cryostat | Leak/rupture | 1 | 1.00E-08 | NRC | 1.00E-08 | 7.00E-04 | 232 | 0 | 17.1 | 3.07E-07 | 2.15E-18 |
| PT-185-V | Treat as flange, max flow into cryostat | Leak/rupture | 1 | 3.00E-07 | NRC | 3.00E-07 | 7.00E-04 | 232 | 0 | 17.1 | 3.07E-07 | 6.44E-17 |
| PT-186-V | Treat as flange, max flow into cryostat | Leak/rupture | 1 | 3.00E-07 | NRC | 3.00E-07 | 7.00E-04 | 232 | 0 | 17.1 | 3.07E-07 | 6.44E-17 |
| MV-256-Ar | Max flow into cryostat | Leak/rupture | 1 | 1.00E-08 | NRC | 1.00E-08 | 7.00E-04 | 232 | 0 | 17.1 | 3.07E-07 | 2.15E-18 |
| CV-256-Ar | Max flow into cryostat | Leak/rupture | 1 | 1.00E-08 | NRC | 1.00E-08 | 7.00E-04 | 232 | 0 | 17.1 | 3.07E-07 | 2.15E-18 |
| MV-291-Ar | Max flow into cryostat | Leak/rupture | 1 | 1.00E-08 | NRC | 1.00E-08 | 7.00E-04 | 232 | 0 | 17.1 | 3.07E-07 | 2.15E-18 |
| MV-294-Ar | Max flow into cryostat | Leak/rupture | 1 | 1.00E-08 | NRC | 1.00E-08 | 7.00E-04 | 232 | 0 | 17.1 | 2.36E-08 | 2.36E-16 |
| MV-295-V | Max flow into cryostat | Leak/rupture | 1 | 1.00E-08 | NRC | 1.00E-08 | 7.00E-04 | 232 | 0 | 17.1 | 2.36E-08 | 2.36E-16 |
| MV-296-Ar | Max flow into cryostat | Leak/rupture | 1 | 1.00E-08 | NRC | 1.00E-08 | 7.00E-04 | 232 | 0 | 17.1 | 2.36E-08 | 2.36E-16 |
| PI-12-Ar | Treat as flange, max flow into cryostat | Leak/rupture | 1 | 3.00E-07 | NRC | 3.00E-07 | 7.00E-04 | 232 | 0 | 17.1 | 3.07E-07 | 6.44E-17 |
| PT-19-V | Treat as flange, max flow into cryostat | Leak/rupture | 1 | 3.00E-07 | NRC | 3.00E-07 | 7.00E-04 | 232 | 0 | 17.1 | 3.07E-07 | 6.44E-17 |
| PSV-210-Ar | Max flow into cryostat | Leak/rupture | 1 | 1.00E-08 | NRC | 1.00E-08 | 7.00E-04 | 232 | 0 | 17.1 | 3.07E-07 | 2.15E-18 |
| PT-11-Ar | Treat as flange, max flow into cryostat | Leak/rupture | 1 | 3.00E-07 | NRC | 3.00E-07 | 7.00E-04 | 232 | 0 | 17.1 | 3.07E-07 | 6.44E-17 |
| PT-33-V | Treat as flange, max flow into cryostat | Leak/rupture | 1 | 3.00E-07 | NRC | 3.00E-07 | 7.00E-04 | 232 | 0 | 17.1 | 3.07E-07 | 6.44E-17 |
| MV-255-Ar | Max flow into cryostat | Leak/rupture | 1 | 1.00E-08 | NRC | 1.00E-08 | 7.00E-04 | 232 | 0 | 17.1 | 3.07E-07 | 2.15E-18 |
| EP-205-Ar | Max flow into cryostat | Leak/rupture | 1 | 1.00E-08 | NRC | 1.00E-08 | 7.00E-04 | 232 | 0 | 17.1 | 3.07E-07 | 2.15E-18 |
| RD-302-V | Max flow into cryostat | Premature Open | 1 | 1.00E-05 | NRC | 1.00E-05 | 7.00E-04 | 232 | 0 | 17.1 | 3.07E-07 | 2.15E-15 |
| PSV-313-Ar | Max flow into cryostat | Leak/rupture | 1 | 1.00E-08 | NRC | 1.00E-08 | 7.00E-04 | 232 | 0 | 17.1 | 3.07E-07 | 2.15E-18 |
| Luke Cryostat | Treat as dewar, max flow into cryostat | Leak/rupture | 1 | 1.00E-06 | FNAL | 1.00E-06 | 7.00E-04 | 232 | 0 | 17.1 | 3.07E-07 | 2.15E-16 |
| Welds | Max flow thru 25% pipe diameter | Leak/rupture | 100 | 3.00E-09 | NRC | 3.00E-07 | 7.00E-04 | 433 | 0 | 17.1 | 3.07E-07 | 6.44E-17 |
| Flanges | Max flow thru 25% pipe diameter | Leak/rupture | 20 | 3.00E-07 | NRC | 6.00E-06 | 7.00E-04 | 433 | 0 | 17.1 | 3.07E-07 | 1.29E-15 |
| LAr vent piping | Max flow into cryostat | Leak/rupture | 1 | 1.00E-09 | NRC | 1.00E-09 | 7.00E-04 | 232 | 0 | 17.1 | 3.07E-07 | 2.15E-19 |
| | | | | | **SUM** | **1.89E-04** | | | | | **SUM** | **4.24E-09** |

# 3.5a2 – ODH Fan Manufacturer Info

# SWB Backward Inclined Centrifugal Utility Fan

Tag: Mark 1

## STANDARD CONSTRUCTION FEATURES

HOUSING: Heavy gauge steel housing with Lock-seam construction • Unit support angles with prepunched mounting holes • Adjustable motor plate • Corrosion resistant fasteners • Entire unit is phosphatized and coated.
BEARINGS, SHAFT, AND WHEEL: Heavy duty lubricatable, self-aligning ball bearing pillow blocks • Polished, solid steel shafts • Backward inclined fan wheel
(Fans with EXP. motors include: aluminum wheel, aluminum rub ring, and shaft seal)

## SELECTED OPTIONS & ACCESSORIES

Neoprene Isolators Indoor/Outdoor, Single Deflection 1/4"
Steel Wheel Construction
Outlet Flange - Punched
Permatector - Standard Coating on Entire Fan

## ENGINEERING DATA

| Approx. Fan Weight (lb) | Max. T Motor Frame Size |
|---|---|
| 170 | 145 |

**Fan weight is without accessories.

| Drive Type |
|---|
| Variable |

## CONFIGURATION

| Arrangement | Rotation | Discharge Position |
|---|---|---|
| 10 | CW | TH |

## INSTALLATION

| Air Stream Temp. (F) |
|---|
| 70 |

## MOTOR SPECS

| Size (hp) | RPM | V/C/P | Enclosure | Motor Frame Size | FLA (A) |
|---|---|---|---|---|---|
| 2 | 1725 | 460/60/3 | ODP | 56 | 3.4 |

FLA - Based on tables 150 or 148 of National Electrical Code 2002.

## PERFORMANCE Elevation ft = 0

| Qty. | Model | Volume (CFM) | SP (in wg) | TS (ft/min) | OV (ft/min) | FRPM | Operating Power (hp) | SE % |
|---|---|---|---|---|---|---|---|---|
| 1 | SWB-212-20 | 2,000 | 4 | 9,653.0 | 2,433.0 | 3,010 | 1.97 | 64 |

## SOUND

| Inlet Sound Power by Octave Band | | | | | | | | LwA | dBA | Noise Criteria | Sones |
|---|---|---|---|---|---|---|---|---|---|---|---|
| 62.5 | 125 | 250 | 500 | 1000 | 2000 | 4000 | 8000 | | | | |
| 90 | 79 | 78 | 86 | 78 | 78 | 74 | 69 | 86 | 75 | 73 | 24 |

LwA - A weighted sound power level, based on ANSI S1.4. dBA - A weighted sound pressure level, based on 11.5 dB attenuation per octave band at 5.0 ft. Noise Criteria (NC) based on an average attenuation of 11.5 dB per octave band at 5.0 ft.

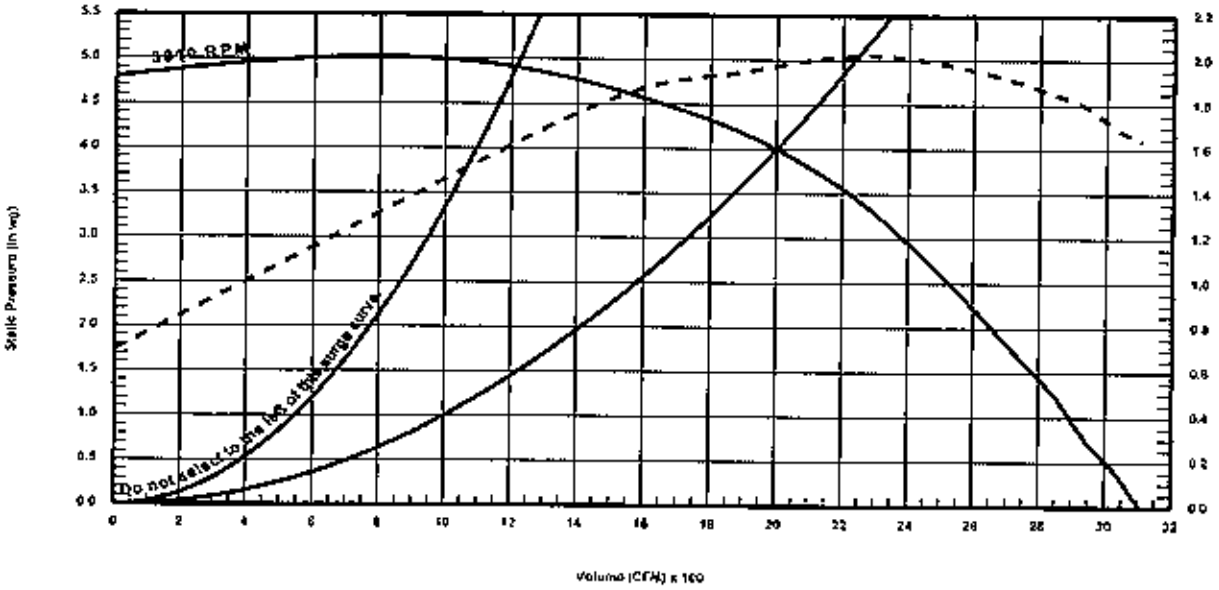

GREENHECK
Building Value in Air.

**Printed Date:** 5/3/2007
**Job:** FERMI LAB CRYOGENIC EXHAUST
**Product Type:** Fan
**Mark:** Mark 1

**Size:** 12
**Arrangement:** 10

# SWB Backward Inclined Centrifugal Utility Fan

NOTES: All dimensions shown are in units of inches.
Drawings are not to scale. Drawings are of standard unit and do not include dimensions for accessories or design modifications.

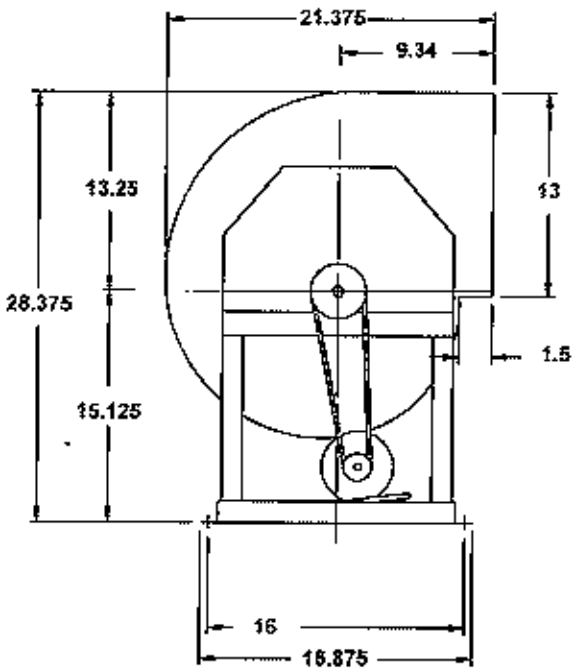


SIDE VIEW

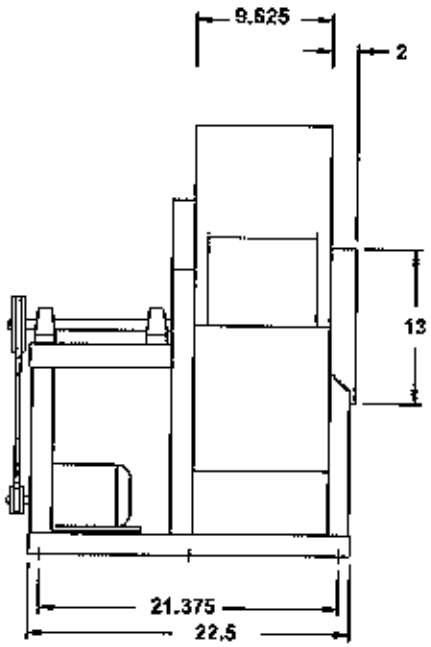


END VIEW

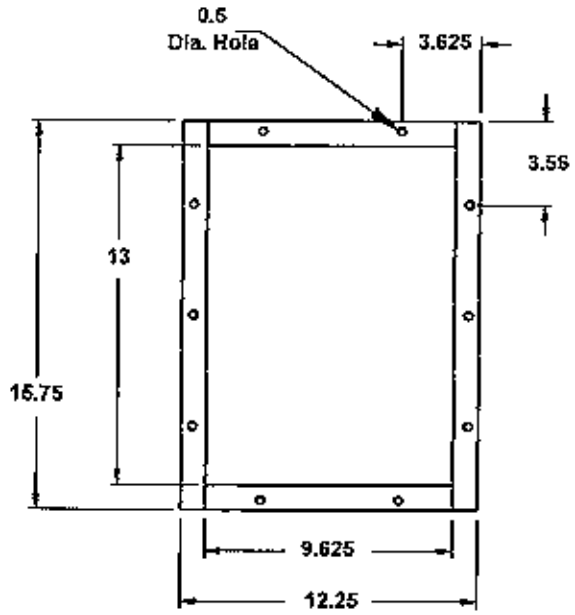


OUTLET

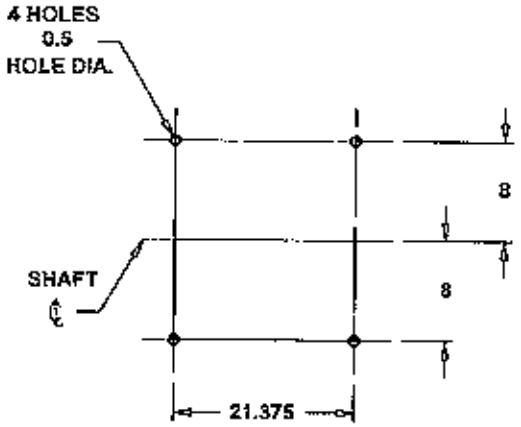


FOOTPRINT

# VCD-23

## Low Leakage Control Damper

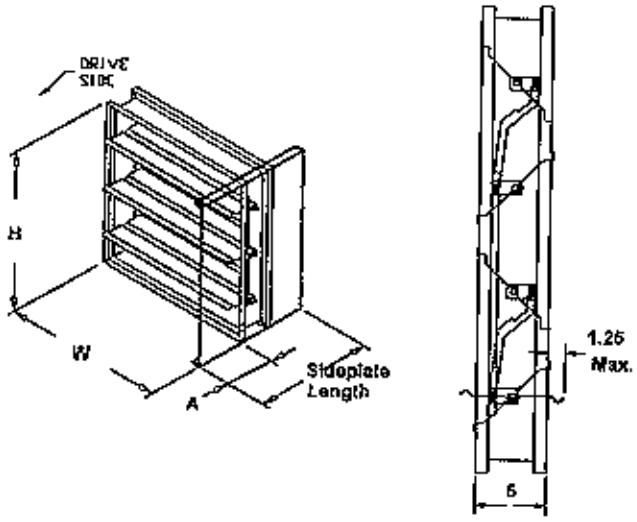


### Application & Design

The model VCD-23 is a ruggedly built low leakage control damper for application as an automatic control or manual balancing damper. A wide range of electric and pneumatic actuators are available. Non-jackshafted dampers will be supplied with a blade drive lever for internal actuator mounting unless external actuator mounting is specified in which case an extension pin kit will be provided. The VCD-23 is intended for applications in low to medium pressure and velocity systems.

- FRAME: Galvanized, 5 in x 1 in hat channel, reinforced corners, low profile head and sill on dampers 17 in high and smaller. (When 304 SS material is selected the frame, blades and all damper components will be provided in 304 SS except: the actuator, mounting hardware and jackshaft)
- BLADES: Galvanized, reinforced with 3 longitudinal structurally designed v's.
- LINKAGE: Side linkage out of air stream.
- AXLES: 0.5 in dia.

Notes: All dimensions shown are in units of inches.

W & H furnished approximately 0.25 in undersized and only refer to damper dimensions (sleeve thickness is not included).

Electrical accessory wiring terminates at the accessory. Field wiring is required to individual components.

### CONSTRUCTION FEATURES

| | | | |
|---|---|---|---|
| **Blade Action:** | Opposed | **Sizing:** | Nominal |
| **Frame Type:** | Channel | **Frame Thickness (ga):** | 16 |
| **Material:** | Galvanized | **Actuator Type:** | 120 VAC |
| **Axle Material:** | Steel | **Actuator Mount:** | Ext Sideplate |
| **Axle Bearings:** | Bronze | **Actuator Location:** | Left Side |
| **Linkage Material:** | Steel | **Fail Position:** | Open |
| **Blade Seal:** | Silicone | **Cycle:** | 60 Cycle |
| **Jamb Seal Mat.:** | 304 SS | | |

| ID # | Tag | Qty | W (in) | H (in) | Drive Arr. | Actuator | Act. Qty. | Sideplate Length... | A-Dim. (in) |
|---|---|---|---|---|---|---|---|---|---|
| 1-1 | | 1 | 20.000 | 20.000 | 11-1FEL-0 | FSLF-120 | 1 | 8 | 1.5 |

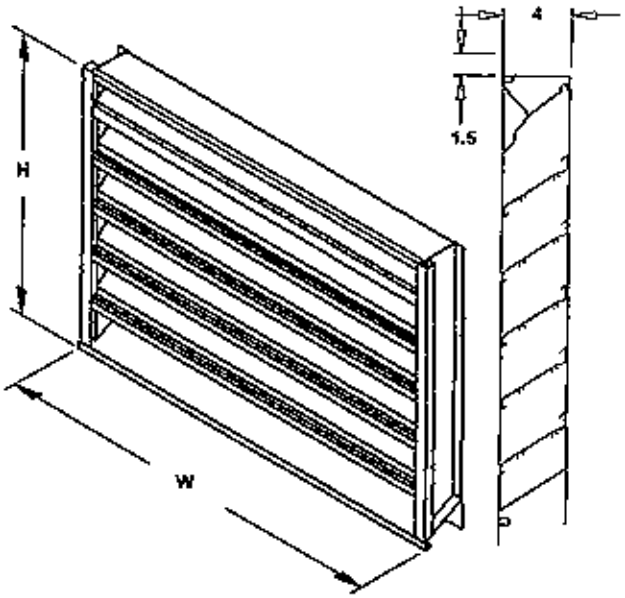


# EDJ-430

## Drainable Head - 30° Blade

### Application & Design

High Performance Drainable Head Stationary Louver Model EDJ-430 is a weather louver designed to protect air intake and exhaust openings in building exterior walls. Design incorporates drainable head, J style blades, stoped sill and high free area to provide maximum resistance to rain and weather while providing minimum resistance to airflow. The EDJ-430 is an extremely efficient louver with AMCA LICENSED PERFORMANCE DATA enabling designers to select and apply with confidence.

STANDARD CONSTRUCTION FEATURES

- Frame: Heavy gauge 6063T5 extruded aluminum, 4 in x 0.081 in nominal dimensions.
- Blades: J style, 6063T5 extruded aluminum, 0.081 in nomial wall thickness, positioned at 30° angles on approximately 3 in centers.
- Bird Screen: 0.75 in x 0.051 in flattened expanded aluminum in removable frame. Screen is mounted on inside (rear).
- Finish: Mill.

Notes: All dimensions shown are in units of inches.
Height & Width furnished approximately 0.25 in under size.

### CONSTRUCTION FEATURES

| | |
|---|---|
| **Frame Type:** | Flanged |
| **Flange Width (in):** | 1.5 |
| **Frame Thickness (in):** | 0.081 |
| **Blade Thickness (in):** | 0.081 |
| **Sizing:** | Nominal |
| **Shape:** | Rectangular |
| **Material:** | Aluminum |
| **Tag List:** | |

### SELECTED OPTIONS & ACCESSORIES

Internally mounted flattened expanded aluminum bird screen

| ID # | Tag | Qty | W (in) | H (in) | Free Area (ft2) | Sect. Wide | Sect. High | Ship Sec. |
|---|---|---|---|---|---|---|---|---|
| 2-1 | | 1 | 26.000 | 26.000 | 2.05 | 1 | 1 | 1 |

PERFORMANCE

| ID # | Tag | Qty | Volume (CFM) | Pres. Drop (in wg) | Air Velocity (ft/min) | BPWP |
|---|---|---|---|---|---|---|
| 2-1 | | 1 | 2,000 | 0.12 | 977 | 941 |

## Damper & Louver Drive Arrangements

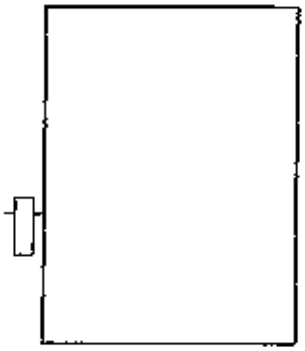

11-1FEL-0 or 11CEL-0

## 3.5b1 – Pressure Vessel Engineering Note for Luke

See 4.1a for relief valve calculations and 4.1aa for supporting relief valve calculation documentation.

Relief valve certifications are included at end of pressure vessel engineering note along with the Form U-1A Manufacturer's Data Report for Pressure Vessels.

# PRESSURE VESSEL ENGINEERING NOTE

## PER CHAPTER 5031

Prepared by: Terry Tope
Preparation date: 3.15.07

1. Description and Identification
Fill in the label information below:

This vessel conforms to Fermilab ES&H Manual Chapter 5031

Vessel Title FLARE Materials Test Station Cryostat

Vessel Number PPD#10100 ←Obtain from Division/Section Safety Officer

Vessel Drawing Number D-13109101

Maximum Allowable Working Pressures (MAWP):
Internal Pressure 35 psig
External Pressure 15 psig

Working Temperature Range -320 °F 100 °F

Contents Liquid Argon

Designer/Manufacturer Chart, Inc.

Test Pressure (if tested at Fermi) Acceptance Date: ←Document per Chapter 5034 of the Fermilab ES&H Manual

PSIG, Hydraulic Pneumatic

Accepted as conforming to standard by

of Division/Section PPD Date: 6/12/07 ←Actual signature required

NOTE: Any subsequent changes in contents, pressures, temperatures, valving, etc., which affect the safety of this vessel shall require another review.

Reviewed by: Date: 6/12/07

Director's signature (or designee) if the vessel is for manned areas but doesn't conform to the requirements of the chapter.

Date:

Date:

ES&H Director Concurrence

| Amendment No.: | Reviewed by: | Date: |
|---|---|---|
| | | |
| | | |

Lab Property Number(s):099938_____
Lab Location Code: 502_____ (obtain from safety officer)
Purpose of Vessel(s): Test contamination effects of proposed LArTPC materials on ultra high purity liquid argon._____
_____
Vessel Capacity/Size: 250 liter__ Diameter: 22 inches Length: 37.5 inches
Normal Operating Pressure (OP) 20 psig_____
MAWP-OP = 15_____PSI

List the numbers of all pertinent drawings and the location of the originals.

| Drawing # | Location of Original |
|---|---|
| D-13109101_____ | Chart Inc., 1300 Airport Drive, _____ |
| _____ | Ball Ground GA 30107 _____ |
| _____ | _____ |
| _____ | _____ |
| _____ | _____ |
| _____ | _____ |

2. Design Verification

Is this vessel designed and built to meet the Code or "In-House Built" requirements?
Yes__X___ No_____.

If "No" state the standard that was used _____.
Demonstrate that design calculations of that standard have been made and that other requirements of that standard have been satisfied.
Skip to part 3 "system venting verification."

Does the vessel(s) have a U stamp? Yes__X___ No_____. If "Yes", complete section 2A; if "No", complete section 2B.

A. Staple photo of U stamp plate below.
Copy "U" label details to the side

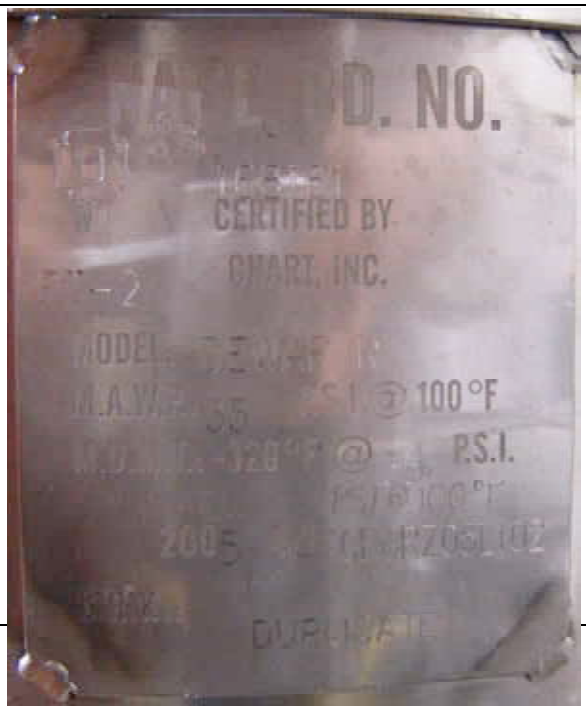


Copy data here:
NAT'L. BD. NO._____

168161_____

CERTIFIED BY_____

CHART, INC._____

RT-2_____

MODEL: DEWAR R_____

M.A.W.P.: 35 P.S.I. @ 100 °F

M.D.M.T. -320 °F @ 35 P.S.I.

MAEWP 15 psi @ 100 °F_____

2005 S/N CEGRZ05L102_____

DUPLICATE_____

Provide ASME design calculations in an appendix. On the sketch below, circle all applicable sections of the ASME code per Section VIII, Division I. (Only for non-coded vessels)

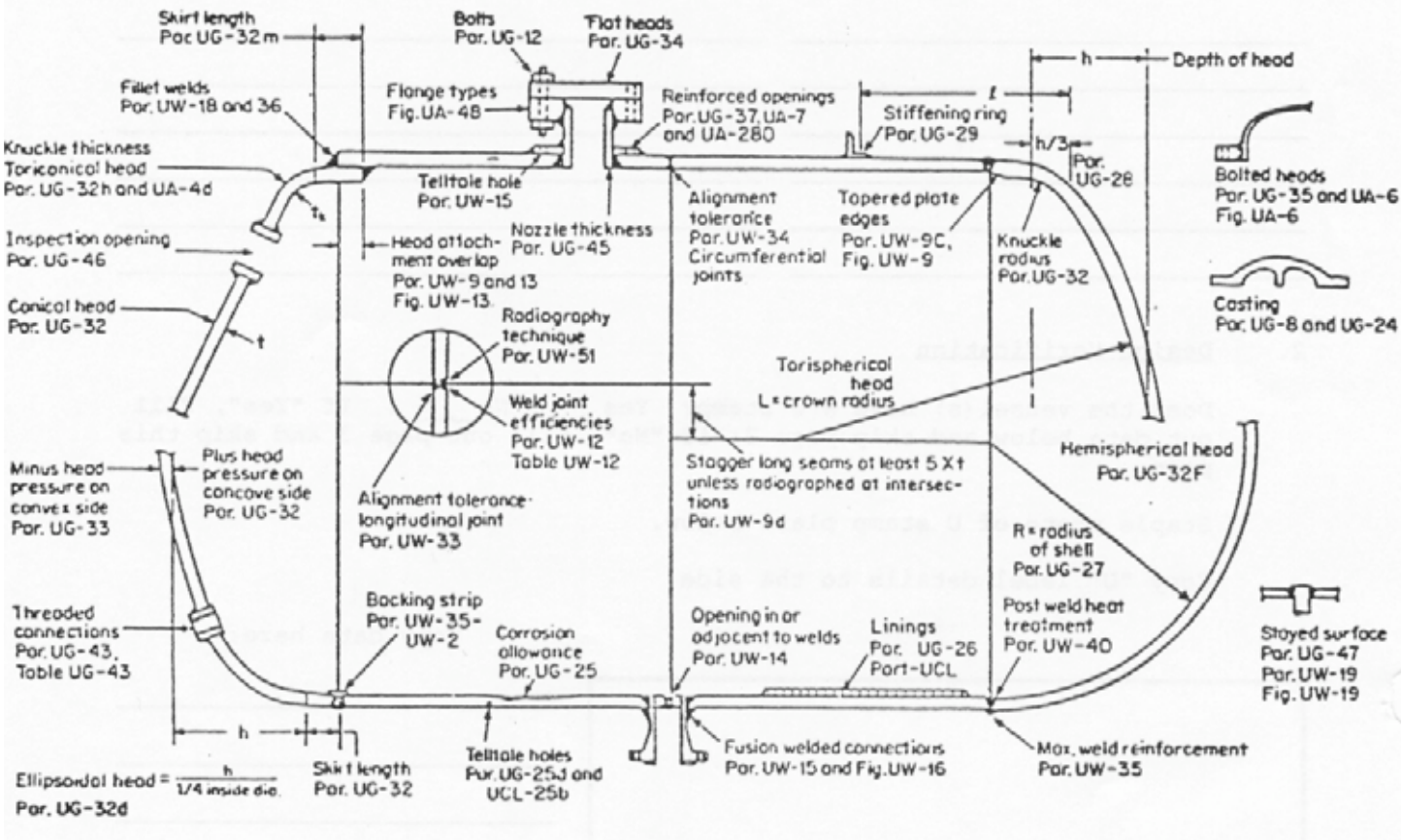


Figure 1. ASME Code: Applicable Sections

**2B.**

Summary of ASME Code

| Item | Reference ASME Code Section | CALCULATION RESULT (Required thickness or stress level vs. actual thickness calculated stress level) |
|---|---|---|
| _____ | _____ | _____ vs _____ |
| _____ | _____ | _____ vs _____ |
| _____ | _____ | _____ vs _____ |
| _____ | _____ | _____ vs _____ |
| _____ | _____ | _____ vs _____ |

3. System Venting Verification  Provide the vent system schematic.

Does the venting system follow the Code UG-125 through UG-137?
Yes_X__ No___

Does the venting system also follow the Compressed Gas Association Standards S-1.1 and S-1.3?
Yes _X____  No_____

A "no" response to both of the two proceeding questions requires a justification and statement regarding what standards were applied to verify system venting is adequate.

List of reliefs and settings:

| Manufacturer | Model # | Set Pressure | Flow Rate | Size |
|---|---|---|---|---|
| Anderson Greenwood___ | 83SF1216F | 35 psig___ | 227 SCFM Ar__ | 1.5" x 2.0"_ |
| BS&B (rupture disc)__ | JRS _____ | 55 psig___ | 1066 SCFM Ar_ | 1.5"_____ |
| _____ | _____ | _____ | _____ | _____ |
| _____ | _____ | _____ | _____ | _____ |
| _____ | _____ | _____ | _____ | _____ |
| _____ | _____ | _____ | _____ | _____ |

4. Operating Procedure

Is an operating procedure necessary for the safe operation of this vessel?
Yes_____  No__X____ (If "Yes", it must be appended)

5. Welding Information

Has the vessel been fabricated in a non-code shop?  Yes____ No__X___
If "Yes", append a copy of the welding shop statement of welder qualification (Procedure Qualification Record, PQR) which references the Welding Procedure Specification (WPS) used to weld this vessel.

6. Existing, Used and Unmanned Area Vessels

Is this vessel or any part thereof in the above categories?
Yes_____ No_X____

If "Yes", follow the requirements for an Extended Engineering Note for Existing, Used and Unmanned Area Vessels.

7. Exceptional Vessels

Is this vessel or any part thereof in the above category?
Yes_____ No__X___

If "Yes", follow the requirements for an Extended Engineering Note for Exceptional Vessels.

**THIS VESSEL CONFORMS TO FERMILAB ES&H MANUAL CHAPTER 5031**

Vessel Title _____

Vessel Number _____

Vessel Drawing Number _____

Maximum Allowable Working Pressures (MAWP):

Internal Pressure _____

External Pressure _____

Working Temperature Range _____ $^0$F _____ $^0$F

Contents _____

Designer _____

Test Pressure (if tested at Fermi) DATE ___/___/_____

_____PSIG, Hydraulic _____ Pneumatic_____

Accepted as conforming to standard by

_____

Of Division/Section_____

NOTE: Any subsequent changes in content, pressures, temperatures, valving, etc., which affect the safety of this vessel shall require another review and test.

Figure 2. Sample of sticker to be completed and be placed on vessel.

**FORM U-1A MANUFACTURER'S DATA REPORT FOR PRESSURE VESSELS**
**(Alternative Form for Single Chamber, Completely Shop-Fabricated Vessels Only)**
**As Required by the Provisions of the ASME Code Rules, Section VIII, Division 1**

1. Manufactured and certified by **CHART, Inc., 1300 Airport Drive, Ball Ground GA 30107**
(Name and address of Manufacturer)

2. Manufactured for **STOCK**
(Name and address of purchaser)

3. Location of installation **Unknown**
(Name and address)

4. Type **Vertical / Tank** (Horiz. or vert., tank) **CEGRZ06L101-102** (Mfg.'s serial No.) (CRN) **D-13109101** (Drawing No.) **168160-168161** (Nat'l. Bd. No.) **2005** (Year built)

5. The chemical and physical properties of all parts meet the requirements of material specifications of the ASME BOILER AND PRESSURE VESSEL CODE. The design, construction, and workmanship conform to ASME Rules, Section VIII, Division 1 **2004** (Year)

to **A04** (Addenda (Date)) **N/A** (Code Case Nos.) **Low Temp / UHA-51 (a)** (Special Service per UG-120 (d))

6. Shell: **SA-240 T304** (Matl. (Spec. No., Grade)) **.090 NOM** (Nom. Thk. (in.)) **0.0** (Corr. Allow. (in.)) **1 ft. 10.24 in.** (Dia. I.D. (ft. & in.)) **3 ft. 1.5 in.** (Length (overall) (ft. & in.))

7. Seams: **TYPE 3** (Long. (Welded, Dbl., Sngl., Lap, Butt)) **NONE** (R.T. (Spot or Full)) **60** (Eff. (%)) **N/A** (H.T. Temp. (°F)) **N/A** (Time (hr)) **TYPE 3** (Girth (welded, Dbl., Sngl., Lap, Butt)) **NONE** (R.T. (Spot, Partial, or Full)) **1** (No.of Courses)

8. Heads: (a) Matl. **N/A** (Spec. No., Grade) (b) Matl. **SA-240 T 304** (Spec. No., Grade)

| | Location (top, Bottom, Ends) | Minimum Thickness | Corrosion Allowance | Crown Radius | Knuckle Radius | Elliptical Ratio | Conical Apex Angle | Hemispherical Radius | Flat Diameter | Side to Pressure (Convex or Concave) |
|---|---|---|---|---|---|---|---|---|---|---|
| (a) | Top | N/A | N/A | N/A | N/A | N/A | N/A | N/A | N/A | N/A |
| (b) | Bottom | 0.095 | 0.0 | 22" | 1.375" | N/A | N/A | N/A | N/A | Concave |
| | | | | | | | | | | |

If removable, bolts used (describe other fastenings) **BOLTS ARE NOT FURNISHED** (Matl., Spec. No., Gr., Size, No.)

9. MAWP **35** (internal) **15** (external) psi at max. temp. **100** (internal) **100** (external) °F.
Min. design metal temp. **- 320** °F at **35** psi. Hydro, pneu., or **COMB.** test pressure **53** psi.

10. Nozzles, inspection and safety valve openings:

| Purpose (Inlet, Outlet, Drain) | No. | Diam. or Size | Type | Matl. | Nom. Thk. | Reinforcement Matl. | How Attached | Location |
|---|---|---|---|---|---|---|---|---|
| INLET/ OUTLET | 1 | 22.09" ID | FLANGE | SA240 T304 | 1" | None | UW-13.2(h) | N/A |
| | | | | | | | | |
| | | | | | | | | |

11. Supports: Skirt **No** (Yes or No) Lugs **N/A** (No.) Legs **N/A** (No.) Other **NONE** (Describe) Attached **N/A** (where and How)

12. Remarks: Manufacturer's Partial Data reports properly identified and signed by Commissioned Inspectors have been furnished for the following items of the report :**N/A**
(Name of part, item number, Mfg.'s. name and identifying stamp)

**Vacuum Jacketed Dewar. Low Temperature Service, Design Pressure is 35 PSI.**
**Impact test Exempt Per UHA51 (d) (1) (a). Hydro Test Is Vertical For Noncorrosive Service.**

**CERTIFICATION OF SHOP COMPLIANCE**

We certify that the statements made in this report are correct and that all details of design, material, construction, and workmanship of this vessel conform to the ASME Code for Pressure Vessels, Section VIII, Division 1. "U" Certificate of Authorization No. **19,262** expires **03/14**, 2008.
Date 12/1/05 Co. name **CHART , Inc.** (Manufacturer) Signed (Representative)

**CERTIFICATE OF SHOP INSPECTION**

Vessel constructed by **CHART, Inc.** at **Canton, GA**
I, the undersigned, holding a valid commission issued by the National Board of Boiler and Pressure Vessel Inspectors and/or the State or Province of **Georgia** and employed by **OneBeacon America Insurance Company**
have inspected the component described in this Manufacturer's Data Report on **12/1**, 20**05**, and state that, to the best of my Knowledge and belief, the Manufacturer has constructed this pressure vessel in accordance with the ASME Code, Section VIII, Division 1. By signing this certificate neither the inspector nor his employer makes any warranty, expresses or implied, concerning the pressure vessel described in this Manufacturer's Data Report. Furthermore, neither the inspector nor his employer shall be liable in any manner for any personal injury or property damage or a loss of any kind arising from or connected with this inspection.
Date 12/13/05 Signed (Authorized Inspector) Commissions NB#: 12724 GA #538 (Nat'l Bd. (include. endorsements), State, Prov. and No.)

ASME Manufacturer's Certificate of Conformance for Pressure Relief Valves
Form UV-1 (Section VIII)

1. Manufactured by: Anderson Greenwood Crosby - Stafford, Texas

2. Table of Code symbol stamped items:

| ID (Serial No) | Date | NB Cert # | QTY | Type | Size, (NPS) | Set Pressure,psig (Nameplate) | Capacity | Test Fluid | Date Code | CI Name | CI Signature |
|---|---|---|---|---|---|---|---|---|---|---|---|
| CS-55706 | 11/03/06 | 01089 | 1 | 83571216-F | 1 1 | 00035 PSIG | 244 SCFM | Air | 5SE 2D9 | M. Howard | [signature] |

3. Remarks: L61448.C01

CERTIFICATE OF SHOP COMPLIANCE

By the signature of the Certified Individual (CI) noted above, we certify that the statements made in this report are correct and that all details for design, material, construction and workmanship of the pressure relief devices conform with the requirements of Section VIII, Division 1 of the ASME Boiler and Pressure Vessel Code.

UV Certificate of Authorization No. 3753 Expires December 31, 2007

Date: 11.08.06 Signed: [signature] (Responsible representative) Name: Anderson Greenwood Crosby - Stafford, Texas (Manufacturer)

TYCO VALVES & CONTROLS LP
STAFFORD DIVISION
ANDERSON GREENWOOD CROSBY

SALES ORDER NO: L61449.001

# F U N C T I O N A L  T E S T  R E P O R T

DATE PRINTED: 11/01/06

PAGE: 1

CUSTOMER: TYCO VALVES & CONTROLS-S
PO NUMBER: 1735082-CO

SHIP TO COST: FERMI LABS
PRODUCT NUMBER: 030SSSE12..16..F0000SS3BS
PART NBR: 161448.001

MARKS: 572105
GAGE NO: A60-05

| SERIAL NO | TAG | PRIMARY PRESSURE PARTS TEST | BELLOWS OR O-RING TEST | SECONDARY PRESSURE ZONE TEST | ASSY TECH | NAMEPLATE SET 35 OTP | SPECIFIED RESEAT FIXED | LEAK TEST 30 1 MIN TIME | FINAL TECH |
|---|---|---|---|---|---|---|---|---|---|
| 06-55706 | | | NA | 30 | | 36 | 1 turn | 0 | |

TRACEABILITY REQUIREMENTS - HEAT/CODE NUMBERS FOR TRACEABLE COMPONENTS

| SERIAL NO | BODY/CYLINDR | BASE | BONNET | FLANGE IN | FLANGE OUT | NOZZLE | STUB IN | STUB OUT | DISC | | |
|---|---|---|---|---|---|---|---|---|---|---|---|
| 06-55706 | | | | | | | | | | | |

CUSTOMER/DATE
WITNESSED:

| UNITS OF MEASURE | | | TEST MEDIUM | | |
|---|---|---|---|---|---|
| UNITS | PRES. | VAC. | AIR | H2O | STEAM |
| PSIG | ✓ | | ✓ | | |
| "WC | | | | | |
| | | | | | |

VERIFIED/DATE

INSPECTED BY:

NOV 08 2006

SOJDE FORMS=GRABAR, FORMAT=FMT2C, MODIFY=CMS2, END;

## 3.5b2 – Updated Pressure Vessel Engineering Note for PAB (Formally PS1) Liquid Nitrogen Dewar

See 4.1c for relief valve calculations.

Relief valve certifications included at end of pressure vessel engineering note.

# PRESSURE VESSEL ENGINEERING NOTE

## PER CHAPTER 5031

Prepared by: Terry Tope
Preparation date: 4.23.07

1. Description and Identification
Fill in the label information below:

This vessel conforms to Fermilab ES&H Manual Chapter 5031

Vessel Title Liquid Nitrogen Dewar #14

Vessel Number RD#1079 ←Obtain from Division/Section Safety Officer

Vessel Drawing Number N/A

Maximum Allowable Working Pressures (MAWP):
Internal Pressure 75 psig + full vacuum
External Pressure Not Rated

Working Temperature Range -320 °F 100 °F

Contents Liquid Nitrogen

Designer/Manufacturer C.E. Howard Corporation

Test Pressure (if tested at Fermi) Acceptance Date: ←Document per Chapter 5034 of the Fermilab ES&H Manual

PSIG, Hydraulic Pneumatic
Accepted as conforming to standard by

of Division/Section PPD Date: 6/27/07 ←Actual signature required

NOTE: Any subsequent changes in contents, pressures, temperatures, valving, etc., which affect the safety of this vessel shall require another review.

Reviewed by: Date: 4/24/07

Director's signature (or designee) if the vessel is for manned areas but doesn't conform to the requirements of the chapter.

Date:

Date:

ES&H Director Concurrence

| Amendment No.: | Reviewed by: | Date: |
|---|---|---|
| | | |
| | | |

Lab Property Number(s):_____
Lab Location Code: 502_____ (obtain from safety officer)
Purpose of Vessel(s): To supply liquid nitrogen to PAB._____
_____
Vessel Capacity/Size: 7000 liters Diameter: 84 inches Length: 167 inches
Normal Operating Pressure (OP) 30 psig_____
MAWP-OP = 45_____PSI

List the numbers of all pertinent drawings and the location of the originals.

| Drawing # | Location of Original |
|---|---|
| N/A | |
| | |
| | |
| | |
| | |
| | |

2. Design Verification

Is this vessel designed and built to meet the Code or "In-House Built" requirements?
Yes__X___ No_____.

If "No" state the standard that was used _____.
Demonstrate that design calculations of that standard have been made and that other requirements of that standard have been satisfied.
Skip to part 3 "system venting verification."

Does the vessel(s) have a U stamp? Yes__X___ No_____. If "Yes", complete section 2A; if "No", complete section 2B.

A. Staple photo of U stamp plate below.
Copy "U" label details to the side

Copy data here:
C.E. Howard Corporation_____

Built for Cryo Sonics Inc.__

Service: Liquid Nitrogen___

Date: 1961 Code: 1959____

Design Pressure:_____

75 psig + Full Vac._____

Test Pressure: 150 psig____

Design Temp:_____

-320 °F to 100 °F I.T _____

Serial Number 489_____

_____

Provide ASME design calculations in an appendix. On the sketch below, circle all applicable sections of the ASME code per Section VIII, Division I. (Only for non-coded vessels)

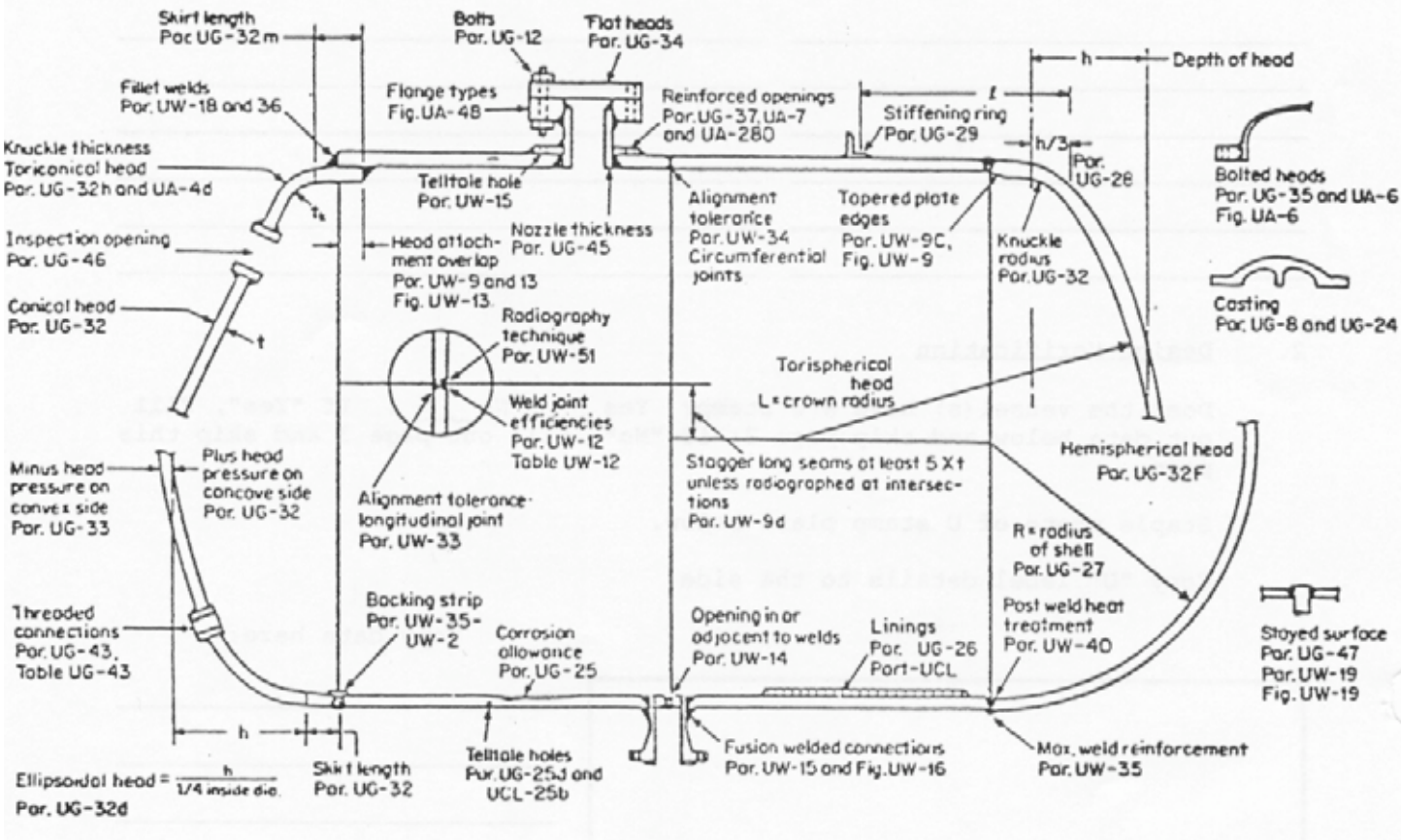


Figure 1. ASME Code: Applicable Sections

**2B.**

Summary of ASME Code

| Item | Reference ASME Code Section | CALCULATION RESULT (Required thickness or stress level vs. actual thickness calculated stress level) |
|---|---|---|
| _____ | _____ | _____ vs _____ |
| _____ | _____ | _____ vs _____ |
| _____ | _____ | _____ vs _____ |
| _____ | _____ | _____ vs _____ |
| _____ | _____ | _____ vs _____ |

3. System Venting Verification  Provide the vent system schematic.

Does the venting system follow the Code UG-125 through UG-137?
Yes_X__ No___

Does the venting system also follow the Compressed Gas Association Standards S-1.1 and S-1.3?
Yes _X____  No_____

A "no" response to both of the two proceeding questions requires a justification and statement regarding what standards were applied to verify system venting is adequate.

List of reliefs and settings:

| Manufacturer | Model # | Set Pressure | Flow Rate | Size |
|---|---|---|---|---|
| Anderson Greenwood___ | 81S1216G | 75 psig___ | 731 SCFM Air_ | 1.5" x 2.0" _ |
| Fike (rupture disc)__ | CPV BT __ | 105 psig__ | 3024 SCFM Air | 1.5"_____ |
| _____ | _____ | _____ | _____ | _____ |
| Chart Industries_____ | Herose EPD | 75 psig___ | 30 ms close__ | 1 ½"_____ |
| Fill Shut Off Valve__ | _____ | _____ | _____ | _____ |
| _____ | _____ | _____ | _____ | _____ |

4. Operating Procedure

Is an operating procedure necessary for the safe operation of this vessel?
Yes_____  No__X____ (If "Yes", it must be appended)

5. Welding Information

Has the vessel been fabricated in a non-code shop?  Yes____ No__X___
If "Yes", append a copy of the welding shop statement of welder qualification (Procedure Qualification Record, PQR) which references the Welding Procedure Specification (WPS) used to weld this vessel.

6. Existing, Used and Unmanned Area Vessels

Is this vessel or any part thereof in the above categories?
Yes__X___ No_____

If "Yes", follow the requirements for an Extended Engineering Note for Existing, Used and Unmanned Area Vessels.

7. Exceptional Vessels

Is this vessel or any part thereof in the above category?
Yes_____ No__X___

If "Yes", follow the requirements for an Extended Engineering Note for Exceptional Vessels.

**THIS VESSEL CONFORMS TO FERMILAB ES&H MANUAL CHAPTER 5031**

Vessel Title _____

Vessel Number _____

Vessel Drawing Number _____

Maximum Allowable Working Pressures (MAWP):

Internal Pressure _____

External Pressure _____

Working Temperature Range _____ $^0$F _____ $^0$F

Contents _____

Designer _____

Test Pressure (if tested at Fermi) DATE ___/___/_____

_____PSIG, Hydraulic _____ Pneumatic_____

Accepted as conforming to standard by

_____

Of Division/Section_____

NOTE: Any subsequent changes in content, pressures, temperatures, valving, etc., which affect the safety of this vessel shall require another review and test.

Figure 2. Sample of sticker to be completed and be placed on vessel.

**Tyco Valves & Controls**
Bolingbrook, IL 60440
800-261-3324

# VALVE REPAIR WORK ORDER

Page ____ of ____ TVCR- 5678 R

Customer FERMI LAB PO# ____
Location BATAVIA IL Date Rec'd 3-15-06

**RECORD OF ORIGINAL NAMEPLATE DATA**

Prv. Mfr. Anderson Greenwood Capacity 442 SCFM
Type No. 81512166 ASME Code Stamp UV
Inlet/Outlet 1.5 in./ ____ in. Mfr. S/N 86109675
Set Press 40 PSIG Tag No. SV099 N
Trim No. T00

**CHANGE IN SET PRESSURE:**
Reset To 75 PSIG
New Capacity 731.5 SCFM

**RECORD OF PRETEST (AS FOUND)**
Test Pressure ____
Blowdown ____
Tightness ____
Action ____

**Pretest Sign-Off**
Tested by ____
Date ____
M&TE S/N ____

**RECORD OF PREVIOUS REPAIR**
By Allied VALVE
Model — Set —
Capacity — Date 9-14-98
Unique # 286028-2-FW VR Stamp TESTED ONL

**RECORD OF DISASSEMBLY & CLEANING**

| Item (s): "As Found Conditions" | |
|---|---|
| Cap and Lever | |
| Bonnet/Compr Scr: 1.972 | |
| Spring/Steps | |
| Spindle/Disc | |
| Base/Nozzle | |
| Guide/Adj. Rings | |
| Other (Specify) | |

**RECORD OF CRITICAL INSPECTION & MACHINING**

| Comments | OK | Machine | Replace |
|---|---|---|---|
| | X | | |
| | X | | |
| Spring# | X | | X |
| T.I.R. | | | X |
| Bore Dia. | | Lap | |
| | X | | |
| | | | |

**RECORD OF REPLACEMENT PARTS**

| Part No | Description | PO# |
|---|---|---|
| 04.4805-009 | SOFT GOODS KIT | 1731417-00 |
| 03.1062.002 | Spring | 1732392-00 |
| | | |
| | | |
| | | |

Notes Reset VALVE to 75 PSI at Customer request.

**RECORD OF TECHNICIAN SIGN-OFF**

| Repair Step | Initials | Date |
|---|---|---|
| Nameplate | MP | 3-15-06 |
| Disassembly | DA | 3-22-06 |
| Cleaning | DA | 3-23-06 |
| Inspection | DA | 3-23-06 |
| Machining | | |
| Parts | DA | 3-23-06 |
| Assembly | DA | 3-23-06 |
| Testing | DA | 3-24-06 |
| Final-Assembly | DA | 3-24-06 |
| VR Stamp (Y) N | DA | 3-24-06 |

**RECORD OF FINAL TEST RESULTS**
Test Stand/Media TB10008-AIR
Test Pressure 75
Blowdown —
Tightness 69
M&TE S/N T67

Repaired by
**TYCO VALVES & CONTROLS**
Bolingbrook, IL VR No. 396 & 500
TVCR- 5678R DATE 3-06
STYLE 81512166
SET PRESS 75
CAP 731.5 SCFM YR

**Tyco Valves & Controls**
Bolingbrook, IL 60440
800-261-3324

# VALVE REPAIR WORK ORDER

Page ____ of ____ TVCR- 5677R

Customer FERMILAB PO# ____
Location BATAVIA IL Date Rec'd 3-15-06

**RECORD OF ORIGINAL NAMEPLATE DATA**

Prv. Mfr. Anderson Greenwood Capacity 442 SCFM
Type No. 81512166 ASME Code Stamp UV
Inlet/Outlet 1.5 in./____ in. Mfr. S/N 86109676
Set Press 40 PSIG Tag No. SV100N
Trim No. T00

**CHANGE IN SET PRESSURE:**
Reset To 75 PSIG
New Capacity 731.5 SCFM

**RECORD OF PRETEST (AS FOUND)**
Test Pressure ____
Blowdown ____
Tightness ____
Action ____

**Pretest Sign-Off**
Tested by ____
Date ____
M&TE S/N ____

**RECORD OF PREVIOUS REPAIR**
By Allied VALVE
Model — Set —
Capacity — Date 9-14-98
Unique # 286028-4-[illegible] VR Stamp TESTED ONL

| RECORD OF DISASSEMBLY & CLEANING | RECORD OF CRITICAL INSPECTION & MACHINING | | | |
|---|---|---|---|---|
| Item (s): "As Found Conditions" | Comments | OK | Machine | Replace |
| Cap and Lever | | X | | |
| Bonnet/Compr Scr: 1,969 | | X | | |
| Spring/Steps | Spring# | - | | X |
| Spindle/Disc | T.I.R. | | | X |
| Base/Nozzle | Bore Dia. | | LAP | |
| Guide/Adj. Rings | | X | | |
| Other (Specify) | | | | |

**RECORD OF REPLACEMENT PARTS**

| Part No | Description | PO# |
|---|---|---|
| 04.4805.009 | Soft GOODS KIT | 1732392.00 |
| 03.1062.002 | Spring | 1732392.00 |
| | | |
| | | |
| | | |

Notes

**RECORD OF TECHNICIAN SIGN-OFF**

| Repair Step | Initials | Date |
|---|---|---|
| Nameplate | MP | 3-15-06 |
| Disassembly | DA | 3-23-06 |
| Cleaning | DA | 3-23-06 |
| Inspection | DA | 3-23-06 |
| Machining | | |
| Parts | DA | 3-23-06 |
| Assembly | DA | 3-23-06 |
| Testing | DA | 3-24-06 |
| Final-Assembly | DA | 3-24-06 |
| VR Stamp | (Y) N | DA 3-24-06 |

**RECORD OF FINAL TEST RESULTS**
Test Stand/Media TB1000B-Air
Test Pressure 76
Blowdown —
Tightness 68
M&TE S/N TG700

Repaired by
**TYCO VALVES & CONTROLS**
Bolingbrook, IL VR No. 396 & 500
TVCR 5677B DATE 3-[illegible]
STYLE 81512166
SET PRESS 75
CAP 731.5 SCFM VR

## 3.5b3 – Old Pressure Vessel Engineering Note for PS1 Liquid Nitrogen Dewar

Previous relief valve calculations are included.

# PRESSURE VESSEL ENGINERING NOTE
# PER CHAPTER 5031

Prepared by: Bruce Squires
Preparation date: 31-Aug-92

1. Description and Identification
Fill in the label information below:

This vessel conforms to Fermilab ES&H Manual Chapter 5031

Vessel Title Liquid Nitrogen Dewar #14

Vessel Number RD 0079 — Obtain from Safety Officer

Division/Section

Vessel Drawing Number N/A

Maximum Allowable Working Pressure (MAWP) 75 psig + Full Vac.

Working Temperature Range -320 °F 100 °F

Contents Liquid Nitrogen

Designer/Manufacturer C.E. Howard Corporation

Test Pressure (if tested at Fermi) Acceptance Date: _____ — Document per Chapter 5034 of the Fermilab ES&H Manual

_____ PSI, Hydraulic _____ Pneumatic _____

Accepted as conforming to standard by

of Division/Section RD Date: 11/9/92 — Actual signature required

NOTE: Any subsequent changes in contents, pressures, temperatures, valving, etc., which affect the safety of this vessel shall require another review.

Reviewed by: Jerry Khalasa AD-CRYO. Date: 11/5/92

Director's signature (or designee) if the vessel is for manned areas but doesn't conform to the requirements of the chapter.

_____ Date: _____

| Amendment No.: | Reviewed by: | Date: |
|---|---|---|
| | | |
| | | |

Lab Property Number(s): _____

Lab Location Code: PS1 (obtain from safety officer)

Purpose of Vessel(s): To supply liquid nitrogen to the PS1 service building

Vessel Capacity/Size: 7000 liters Diameter: 84" Length: 167"

Normal Operating Pressure (OP) 24 - 27 psig

MAWP-OP = 48 PSI

List the numbers of all pertinent drawings and the location of the originals.

| Drawing # | Location of Original |
|---|---|
| N/A | |
| | |
| | |
| | |
| | |
| | |

2. Design Verification

Does the vessel(s) have a U stamp? Yes X No_____. If "Yes", fill out data below and skip page 3; if "No", fill out page 3 and skip this page.

Staple photo of U stamp plate below.

Copy "U" label details to the side

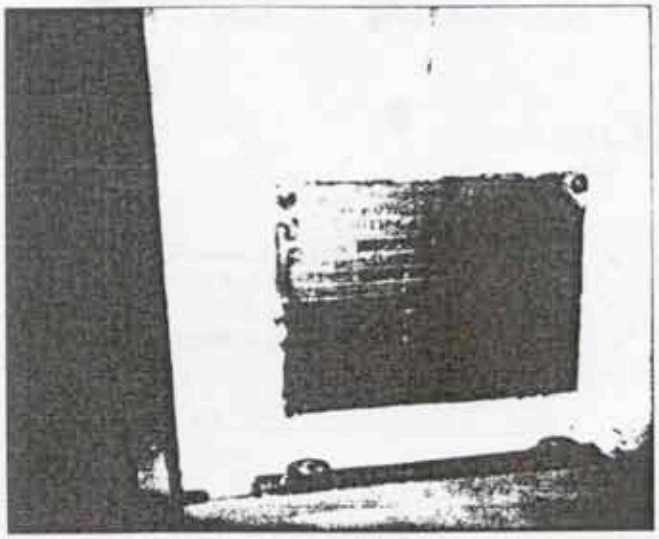

Copy data here:

C.E. Howard Corporation

Built for Cryo Sonics Inc.

Service: Liquid Nitrogen

Date: 1961 CODE: 1959

Design Presssure:

75 psig + Full Vac.

Test Pressure: 150 psig

Design Temp.:

-320°F to 100°F.I.T.

Serial Number: 489

Provide ASME design calculations in an appendix. On the sketch below, circle all applicable sections of the ASME code per Section VIII, Division I. (Only for non-coded vessels)

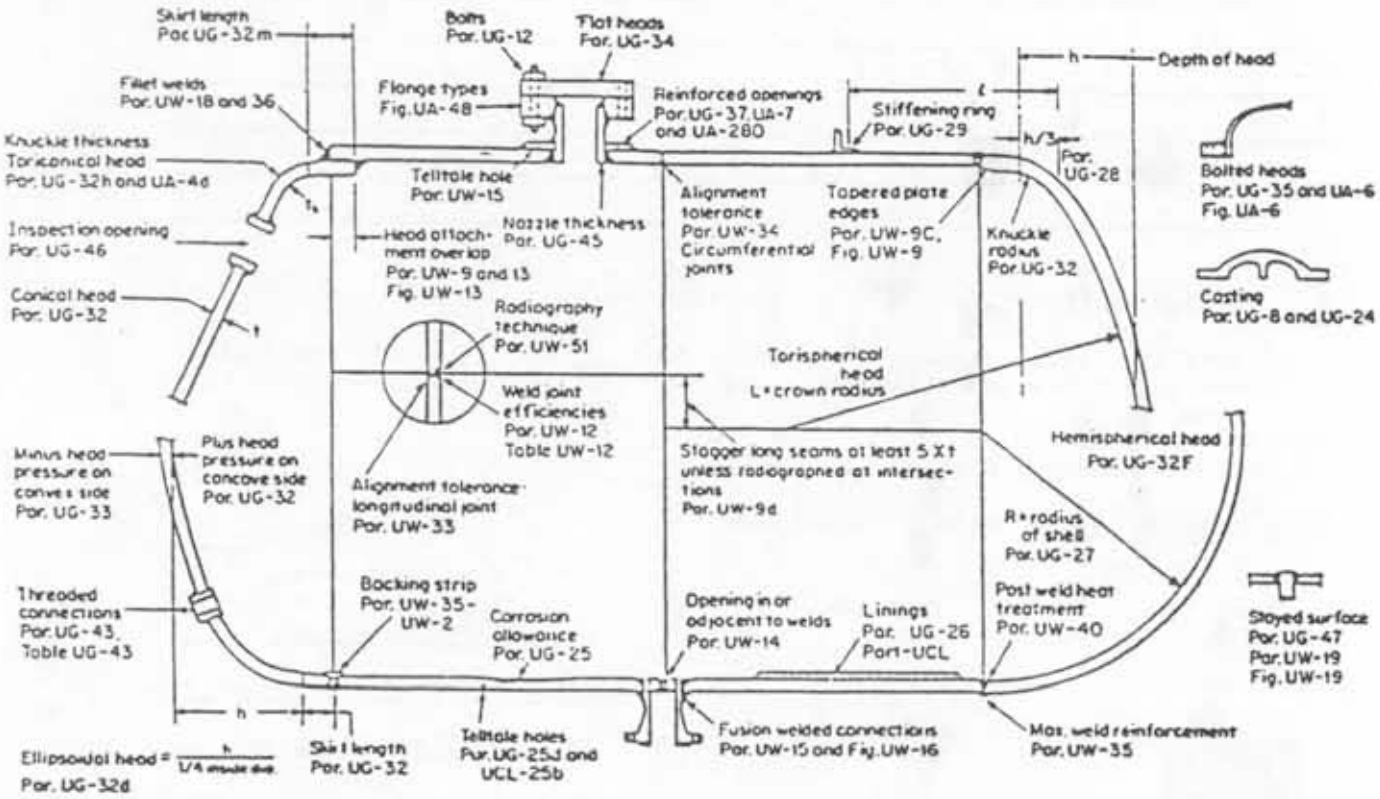


Summary of ASME Code

| Item | Reference ASME Code Section | CALCULATION RESULT (Required thickness or stress level vs. actual thickness calculated stress level) |
|---|---|---|
| | | vs |
| | | vs |
| | | vs |
| | | vs |
| | | vs |

3. System Venting Verification Provide the system schematic in the Appendix.

Is it possible to isolate the relief valves by a valve from the vessel?

Yes___ No X

If "Yes", the system must conform to code rules. Provide an explanation on the appended schematic. (An isolatable vessel, not conforming to code rule is non-compliant under this chapter.)

Is the relief cracking pressure set at or below the M.A.W.P.?

Yes X ____ No_____ Actual setting 40 ___PSIG

(A "No" response violates this chapter.)

Is the pressure drop of the relief system at maximum anticipated flow such that vessel pressure never rises above the following? (UG 125)

Yes X ____ No_____ 110% of MAWP (one relief)
116% of MAWP (multiple reliefs)
121% of MAWP (unexpected heat source)

Provide test or calculational proof in the Appendix.
(Non-conforming pressure rises is non-compliant under this Chapter.)

List of reliefs and settings:

| Manufacturer | Model # | Set Pressure | Flow Rate | Size |
|---|---|---|---|---|
| Anderson Greenwood | 81S1216G | 40 PSIG | 442 SCFM Air | 1-1/2 x 2" |
| Fike | CPV BT | 105.33psig | N/A | 1-1/2" |
| | | | | |
| | | | | |
| | | | | |
| | | | | |

Does the primary relief device follow UG-129? Yes X ____ No_____
(A "No" response is non-compliant under this chapter)

4. Operating Procedure

Is an operating procedure necessary for the safe operation of this vessel?

Yes_____ No X _____ (If "Yes", it must be appended)

5. Welding Information

Has the vessel been fabricated in a non-code shop? Yes_____ No X ____

If "Yes", append a copy of the welding shop statement of welder qualification (Procedure Qualification Record, PQR) which references the Welding Procedure Specification (WPS) used to weld this vessel.

6. Exceptional, Existing, Used and Unmanned Area Vessels

Is this vessel or any part thereof in the above categories?
Yes X ____ No ____ Existing

If "Yes", follow the Engineering Note requirements for documentation and append to Note.

Reviewer note: Formerly vessel # RD3006 from TPL. Thm

# APPENDIX A

## Venting Calculations for the Inner Vessel of the Liquid Nitrogen Dewar #14

### INTRODUCTION

This appendix to the liquid nitrogen dewar #14 engineering note shows that the inner vessel is properly relieved in accordance with Section S-1.3 of the Compressed Gas Association (CGA) Standard and the Fermilab ES&H manual. This appendix is divided into five sections, namely, loss of vacuum, fire condition, failure of the pressure regulator on the pressure building coil, pumping overfill, and rupture disc capacity.

For conservative estimates of the values determined here, the nitrogen is considered as saturated at 44.35 psia. The ASME Code stamped relief valve will maintain the pressure in the inner vessel below 110% of the MAWP (CGA S-1.3 4.9.1.1) during operational emergencies (i.e. loss of vacuum, failure of the pressure regulator on the pressure building coil, and pumping overfill) and within 121% of the MAWP (CGA S-1.3 4.9.1.3) during fire conditions.

These calculations are based on the relief valve set at 40 psig, therefore, the relief can be set as high as the MAWP and still satisfy the requirements of CGA S-1.3 and the Fermilab ES&H manual. Because the relief valve can handle all possible failures, the rupture disc burst pressure is allowed to be as high as 150% of the MAWP (119 psig) per CGA S-1.3 and the Fermilab ES&H manual. The lowest recommended burst pressure is 125% of the relief valve setting based on data from Fike Metal Products.

### LOSS OF VACUUM

According to paragraph 4.9.1.1 of CGA S-1.3, the minimum required relieving capacity for a loss of vacuum is determined by [5]

$$Q_a = \frac{590 - T}{4\,(1660 - T)}\, G_i\, U\, A \qquad (1)$$

where

$$G_i = \frac{73.4\ (1660 - T)}{L_f\ C} \sqrt{\frac{Z\ T}{M}} = 9.36 \qquad (2)$$

For A = 405 $ft^2$, the required stamped capacity of the valve is 12.5 SCFM air. The stamped capacity of the 1-1/2" AGCO set at 40 psig, which serves as the relief valve, is 442 SCFM air and exceeds the required capacity.

FIRE CONDITION

The requirements of paragraph 5.3.5 of CGA S-1.3 state that the required relieving capacity for a fire condition is [6]

$$Q_a = G_i\ U\ A^{\ 0.82} \qquad (3)$$

For this dewar, the required stamped capacity of the relief must be at least 103 SCFM air. The AGCO relief valve exceeds this value.

FAILURE OF THE PRESSURE REGULATOR ON THE PRESSURE BUILDING COIL

CGA S-1.3 4.9.1.1 states that for all operational emergencies, the reliefs should provide adequate venting at 110% of the MAWP. If the pressure regulator on the pressure building coil failed in the open position, the flow rate would be determined by the differential driving pressure (head of liquid nitrogen) and the restriction caused by the pressure building loop. For simplification, just the flow caused by the greatest restriction will be considered (the liquid supply piping, fittings, valves, and regulator). If there is 80" of liquid nitrogen above the coil, the differential driving pressure would be

$$\Delta P = \rho_l\ \frac{g}{g_c} \frac{H}{C_1} \qquad (4)$$

and the resulting flow rate would be [3]

$$W = C_2\ \pi \sqrt{\frac{\Delta P\ \rho_l\ g_c\ d^4}{8\ K}} \qquad (5)$$

The value of $K/d^4$ is calculated for each part of the restriction and added thus obtaining

$$\frac{K}{d^4} = 344.7\ in^{-4}$$

This leads to a flow rate of 1034 lbm/hr ($\Delta P$ = 2.18 psid) which is converted to 127 SCFM air equivalent by [4]

$$Qa = \frac{13.1}{60} W \frac{356}{C} \sqrt{\frac{Z\ T}{M} \frac{28.97}{520}} \qquad (6)$$

Since this is below the relieving capacity of the relief valve, the pressure in the dewar will remain below 110% of the MAWP.

PUMPING OVERFILL

CGA S-1.3 4.8 states that if the storage container is being filled by pumping equipment in excess of the discharge capacity of the relief devices and capable of producing pressures in excess of the MAWP of the container, precautions should be taken to prevent the development of pressure in the container in excess of 116% of the MAWP for multiple relief valves or 110% of the MAWP for a single relief valve (see CGA S-1.3 4.9.1.1).

The maximum flow rate of delivery is controlled by two factors, the fill line flow resistance and the pumping characteristics of the delivery trailer. The pumping curve for the pumping head was obtained from Liquid Carbonics and a third order polynomial was derived from this curve and is as follows:

$$\Delta P_{pump} = -1.432595*10^{-5}*Q^3 + 5.157343*10^{-4}*Q^2 - 4.560995*10^{-2}*Q + 222.2336 \qquad (7)$$

In order to determine the relieving capacity required by an overfill, the American Petroleum Institute (API) recommends determining the flow area required for the liquid portion of the flow and the area for the vapor portion of the flow separately and then adding these two areas resulting in the minimum orifice area required (API 521-3.17.1).

The mass fraction of the liquid that will become vapor when passing through the relief valve is determined by the equation [4]

$$x = \frac{h_{l1} - h_{l2}}{h_{v2} - h_{l2}} \qquad (8)$$

where $h_{l1}$ = -42.48 Btu/lbm (saturated liquid at 44.35 psia)
$h_{l2}$ = -52.37 Btu/lbm (saturated liquid at 14.7 psia)
$h_{v2}$ = 33.14 Btu/lbm (saturated vapor at 14.7 psia)

Thus, the mass fraction that vaporizes is 0.1156. The orifice area required is determined by [1]

$$A = \frac{x\ W}{C\ K_d\ K_b\ P}\sqrt{\frac{Z\ T}{M}} + \frac{(1-x)\ Q}{38\ K_w\ K_v\ K_d\ K_p}\sqrt{\frac{G_f}{\Delta P}} \qquad (9)$$

where the first part is the area required for vapor flow and the second is that required for the liquid flow and

$$W = \rho_l\ Q\ C_3 \qquad (10)$$

The area of the AGCO relief is 0.503 $in^2$.

The flow restrictions used are that of the fill line and its components and the piping between the dewar and the relief valve. Preliminary calculations indicated that the relief valve could not maintain the pressure in the dewar below 110% of the MAWP. Therefore, a flow restricting orifice for the fill line was selected. Refer to Appendix B for a summary of the flow restrictions used in this calculation.

The pressure drop for the piping and components is determined by [3]

$$\Delta P = \frac{\rho_l\ K}{C_4^2}\ \frac{8\ Q^2}{\pi^2\ g_c\ d^4} \qquad (11)$$

For the orifice plate, the set of equations that determine the flow rate is [6]:

$$W = S\ N\ D^2\ F_a\ F_m\ F_c\ F_p\ \sqrt{G_f\ h_w} \qquad (12)$$

where

$$S = 0.58925\ \beta^2 + 0.2725\ \beta^3 - 0.825\ \beta^4 + 1.75\ \beta^5$$

Solving equations 7 through 12 simultaneously has the following results:

| | | |
|---|---|---|
| Liquid nitrogen flow rate | 77.5 | gpm (29330 lbm/hr) |
| Pressure in delivery truck | 30.0 | psig |
| Delivery pump boost in pressure | 215.1 | psid |
| Pressure drop over orifice | 153.6 | psid (4252 in. $H_2O$) |
| Pressure drop over fill line | 8.1 | psid |
| Pressure in dewar | 83.4 | psig (109.4% MAWP) |
| Pressure drop over vent to relief valve | 2.0 | psid |
| Pressure at relief valve | 81.4 | psig |

This shows that the dewar pressure for maximum flow rate of delivery is less than 110% of the MAWP.

RUPTURE DISC CAPACITY

The capacity of the rupture disc is obtained through the following equation:

for gas [1]

$$W = A\,C\,K_d\,P\sqrt{\frac{M}{Z\,T}} \tag{13}$$

and $Q_a$ from equation (6).

At the burst pressure of 105.33 psig, the gas flow rate is 3024 SCFM air.

Table 1. REQUIRED VENTING CAPACITIES

| Condition | Air Equivalent Flow Rate, $Q_a$ (SCFM air) | | |
|---|---|---|---|
| | required | installed | |
| | | safety relief valve | rupture disc |
| Loss of Vacuum | 12.5 | 442 | 3024 |
| Fire | 103 | 442 | 3024 |
| Pressure Building Regulator Failure | 128 | 442 | 3024 |

NOMENCLATURE

| | |
|---|---|
| $A$ | area ($in^2$ except in (1) and (3) where it is $ft^2$) |
| $C$ | coefficient based on $k = 356$ |
| $C_1$ | conversion factor = 1728 $in^3/ft^3$ |
| $C_2$ | conversion factor = 300 (ft/hr) / (in/s) |
| $C_3$ | conversion factor = 8.02 ($ft^3$/hr) / (gal/min) |
| $C_4$ | conversion factor = 37.4 (gal/min) / ($ft^2$ in/sec) |
| $d$ | diameter (inches) |
| $D$ | fill line pipe size = 1.682 inches |
| $f$ | fanning friction factor |
| $F_a$ | Correction factor for contraction of orifice = 0.9968 |
| $F_c$ | Reynold's number correction factor = 1 |
| $F_m$ | Manometer correction factor = 1 |
| $F_p$ | Correction Factor for the Compressibility of the liquid = 1 |
| $g$ | gravitational acceleration = 32 $ft/s^2$ |
| $g_c$ | gravitational constant = 32 $ft/s^2$ lbm/lbf |
| $G_f$ | specific gravity at flowing conditions = 0.756 |
| $G_i$ | gas factor |
| $H$ | height of $LN_2$ = 80 in |
| $h_w$ | pressure drop expressed in inches $H_2O$ |
| $k$ | ratio of specific heats = $C_p/C_v$ = 1.4 |
| $K$ | flow resistance = $fL_p/d$ |
| $K_b$ | correction factor due to back pressure = 1 |
| $K_d$ | coefficient of discharge = 0.816 for relief valve = 0.62 for rupture disc |
| $K_p$ | capacity correction factor = 1 |
| $K_{perlite}$ | thermal conductivity of perlite (Btu in/hr $ft^2$ °F) |
| | (0.4 for mean temperature of 100°F and 0.7 for mean temperature of 450°F) |
| $K_w$ | correction factor due to back pressure = 1 |
| $K_v$ | correction factor due to viscosity = 1 |
| $L_f$ | latent heat at flowing conditions = 78.68 Btu/lbm |
| $L_p$ | length of pipe (in) |
| $M$ | molecular weight = 28 |
| $N$ | constant in equation 12 = 2835 |
| $P$ | pressure (psia) |
| $P_m$ | Maximum Allowable Working Pressure (psid) |

| | |
|---|---|
| $Q$ | volumetric flow rate (gpm) |
| $Q_a$ | air equivalent flow rate (SCFM) |
| $S$ | factor in equation 12 |
| $t$ | thickness (inches) |
| $t_{ins}$ | thickness of insulation = 8.75 inches |
| $T$ | temperature = 158.7 R |
| $U$ | thermal conductance = $\frac{K_{perlite}}{t_{ins}}$ |
| $W$ | mass flow rate (lbm/hr) |
| $Z$ | compressibility factor = 1 |
| $\Delta P$ | differential pressure (psid) |
| $\beta$ | ratio of orifice diameter to pipe diameter = 0.316 |
| $\rho_l$ | density of liquid = 47.19 lbm/ft$^3$ |

REFERENCES

[1] "API Recommended Practice 520", Guide for Inspection of Refinery Equipment: Chapter XVI- Pressure Relieving Devices, American Petroleum Institute, Washington D.C., December 1976. appendix C

[2] ASME Boiler and Pressure Vessel Code Section VIII; Rules for Construction of Pressure Vessels, Division 1, ASME, New York, 1986 edition. part UG

[3] Crane Co., Flow of Fluids Through Valves, Fittings, and Pipe, Technical Paper No. 410, Crane Co., King of Prussia, PA, 24th printing. p. 3-4

[4] Kropschot,R.H., Birmingham,B.W., and Mann,D.B., Technology of Liquid Helium, NBS Monograph 111, October 1968. p. 229,288

[5] "Pressure Relief Device Standards, Part 3- Compressed Gas Storage Containers", Compressed Gas Association, CGA S-1.3, New York, 4th printing, 1980.

[6] Spink, L.K., Principles and Practice of Flow Meter Engineering, The Foxboro Company, Foxboro, MA, 9th edition, 1978

# APPENDIX B

## Calculations of the Flow Restrictions for Appendix A

General

$\frac{K}{d^4}$ is used as a general flow restriction parameter that can be added regardless of the pipe size of the component. Justification of this can be seen by observing that Crane's technical paper 410 states that in order to add K values, all of the K values must be converted to the same pipe size. This is done by dividing K by the fourth power of its pipe size and multiplying the result by the fourth power of the new pipe size. Since the equations will divide this later term out, I have chosen to remove this redundant step to arrive at the same answer.

The values calculated in this appendix are based on Crane's technical paper 410. The following equations and values are taken from Crane's for calculating $\frac{K}{d^4}$:

$$K = \frac{f\,L}{d}$$

$$\frac{K}{d^4} = \frac{891}{Cv^2}$$

| Pipe | f | I.D |
|---|---|---|
| 1/2" sch.40s | 0.027 | 0.622" |
| 1-1/2" sch.10s | 0.020 | 1.682" |
| 2" sch.10s | 0.019 | 2.157" |

Pressure Building Regulator

| Item | $\frac{K}{d^4}$ |
|---|---|
| 2 - 90° elbows (1/2" sch.40s) (K = 30f) | 10.8 |
| 3 - tee branch (1/2" sch.40s) (K = 60f) | 32.5 |
| 100 inches straight pipe (1/2" sch.40s) | 29 |
| Pressure Building Regulator (Cv = 3.2) | 87 |
| 2 - Cryolab Globe Valve (Cv = 3.1) | 185.4 |
| Total | 344.7 |

Fill Line Restriction

The calculation for the fill line does not include all of the straight pipe that may be installed. It only includes the minimum needed for a general installation of this dewar. For this particular installation at PS1, the fill line will be up to 10 feet longer. The contributions are as follows:

| Item | $\frac{K}{d^4}$ |
|---|---|
| Cryolab Globe Valve (Cv = 30) | 0.990 |
| Check Valve (K = 50 f) | 0.125 |
| 3 - 90° elbows (1-1/2" sch 10s long radius) (K = 14f) | 0.105 |
| 1 - tee branch (1-1/2" sch 10s) (K = 60f) | 0.150 |
| 136.5" straight pipe (1-1/2" sch 10s) | 0.213 |
| Total | 1.583 |

Vent Piping for Safety Relief Valve

| Item | $\frac{K}{d^4}$ |
|---|---|
| Piping Inside Vacuum Jacket | |
| 90° long curve pipe (2" sch.10s) (K = 44f) | 0.039 |
| 2 - 90° elbows (2" sch.10s long radius) (K = 15f) | 0.026 |
| 1 - tee branch (2" sch.10s) (K = 60f) | 0.053 |
| 78 inches straight pipe (2" sch.10s) | 0.032 |
| Inside Subtotal | 0.150 |
| Piping Outside Vacuum Jacket | |
| 1 - tee branch (2" sch.10s)(K = 60f) | 0.053 |
| 1 - 90° elbow (2" sch.10s long radius) (K = 15f) | 0.013 |
| 1 - reducer from 2 to 1-1/2 IPS | 0.003 |
| 30 inches straight pipe (2" sch.10s) | 0.012 |
| 1 - tee run (1-1/2" sch.10s) (K = 14f) | 0.035 |
| AGCO Safety Selector (Cv = 90) | 0.110 |
| 12 inches straight pipe (1-1/2" sch.10s) | 0.018 |
| Outside Subtotal | 0.224 |
| Total for Safety Relief Valve Piping | 0.394 |

| FERMILAB ENGINEERING NOTE | SECTION | PROJECT | SERIAL - CATEGORY | PAGE |
|---|---|---|---|---|
| | RD/MSD | PS1 | | 1 of 1 |

| SUBJECT | NAME | |
|---|---|---|
| Liquid Nitrogen Dewar #14 at PS1 | B. Squires | |
| | DATE 01-Sep-92 | REVISION DATE |

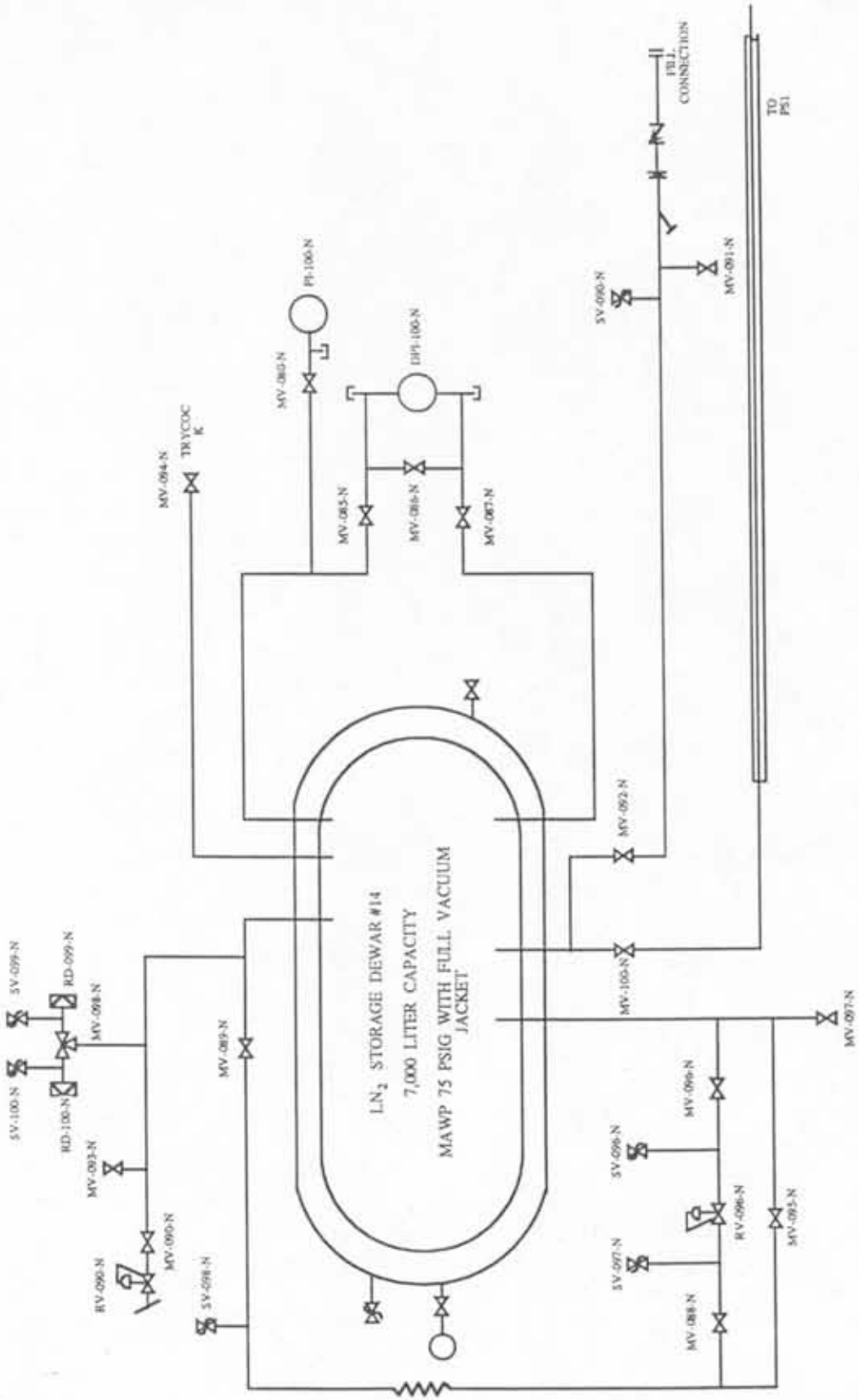

## 3.5b4 – Vacuum Vessel Engineering Note for PS1 Liquid Nitrogen Dewar

Relief and collapse calculations included.

## EXHIBIT A-1

### Vacuum Vessel Engineering Note
### (per Fermilab ES&H Manual Chapter 5033)

Prepared By Bruce Squires Date 1-Sept-92 Div/Sec RD/MSD

Reviewed By [signature] AD-CRYO Date 11/5/92 Div/Sec AD-CRYO

Div/Sec Head [signature] Date 11/10/92 Div/Sec RD

1. Identification and Verification of Compliance

Fill in the Fermilab Engineering Conformance Label information below:

This vessel conforms to Fermilab ES&H Manual Chapter 5033

Vessel Title Liquid Nitrogen Dewar #14

Vessel Number ~~RD-0079~~ RDV 6009

Vessel Drawing Number N/A

Internal MAWP ~1 psig

External MAWP >30 psid

Working Temperature Range 120 °F _____ °F

Designer/Manufacturer C.E. Howard Corporation

Date of Manufacture 1961 {CODE: 1959}

Acceptance Date Sept 1, 1992

Director's signature (or designee) if vessel is for manned area and requires an exception to the provisions of this chapter.

_____

| Amendment No.: | Reviewed By: | Date: |
|---|---|---|
| | | |
| | | |
| | | |

Laboratory location code PS1

Laboratory property number _____

Purpose of vessel Contain $LN_2$ Pressure Vessel in order to provide insulation

List all pertinent drawings

Drawing No.: Location of Original:

N/A

2. Design Verification

Provide design calculations in the Note Appendix.

3. System Venting Verification

Can this vessel be pressurized either internally or externally? [ ] Yes [X] No

*If yes, to what pressure?* There are no means to internally pressurize this vessel

List all reliefs and settings. Provide a schematic of the relief system components and appropriate calculations or test results to prove that the vessel will not be subjected to pressures greater than 110% beyond the maximum allowable internal or external pressure.

| Manufacturer | Relief | Pressure Setting | Flow Rate | Size |
|---|---|---|---|---|
| | Parallel Plate | ~0.5 psig | N/A | 3" (7.07 in$^2$) |
| | | | | |
| | | | | |
| | | | | |

4. Operating Procedure Section

Is an operating procedure necessary for the safe operation of this vessel?

Yes_____ No X (If "Yes", it must be appended)

Is a testing procedure necessary for the safe acceptance testing (proof _____ testing) of this vessel? [ ] Yes [X] No

*If yes, the written procedure must be approved by the Division Head ___ prior to testing and supplied with this Engineering Note.*

5. Welding Information

Has the vessel been fabricated in a Fermilab shop? [ ] Yes [X] No

*If "Yes," append a copy of the welding shop statement of welder qualification.*

6. Exceptional, Existing, Used and Non-Manned Area Vessels

Is this vessel or any part thereof in the above categories?
Yes X No _____ Existing

*If "yes" follow the Engineering Note requirements for documentation and append to note.*

Reviewer note: Formerly vessel # RD3006 from TPL.

Calculations on the
Vacuum Vessel of the Liquid Nitrogen Dewar #14

This appendix shows that the vacuum vessel is adequately relieved and that it meets the specifications of Fermilab ES&H 5033. The calculations are divided into two sections, specifically, relief sizing and vessel collapse pressure.

## RELIEF SIZING

Fermilab ES&H 5033 states that "The relief calculation should take in account a failure of any pipe or vessel inside the vacuum vessel at the maximum system flow rate of that pipe or vessel." I believe that the intent of this statement is for any credible failure. The only credible failure for this case would be a crack in a pipe which cannot be accurately estimated. The Compressed Gas Association (CGA) has a standard for sizing the relief and this is the criterion which will be used to check on the sizing of this relief.

CGA-341 6.4.2 requires that the discharge area of the relief to be 0.00024 square inches per pound of water capacity of the liquid container (inner vessel). The water capacity of the inner vessel can be estimated by the following equation [1]

$$V = \frac{\pi D_i^2}{4 C_1}\left[L_c + 1\frac{1}{3} KD\right] \tag{1}$$

The volume is approximately 2080 gallons which leads to a required discharge area of 4.14 square inches (water density 8.288 lbm/gal.). The relief on this vacuum vessel is a parallel plate with a discharge area of 7.07 square inches. Therefore, the relief surpasses CGA requirements.

## VESSEL COLLAPSE PRESSURE

The Fermilab Engineering Standard requires that a vacuum vessel have a collapse pressure of at least 30 psid. For the cylindrical portion of the vessel, the collapsing pressure is determined by [2]

$$P_c = \frac{2.6\ E\left[\frac{t_c}{D}\right]^{2.5}}{\frac{L}{D} - 0.45\sqrt{\frac{t_c}{D}}} \tag{2}$$

and the collapsing pressure of a head is [2]

$$P_c = 0.25\ E \left[\frac{t_h}{R}\right]^2 \tag{3}$$

The Code specifies that the head radius must be no less than the diameter of the cylindrical portion of the vessel. For these calculations, the head radius is assumed to be equal to the diameter of the cylinder. For this vessel, the collapse pressure for the cylinder is 81 psid and that for the head is 64 psid.

In order for the result of equation 2 to hold true, the stiffening rings must meet the required moment of inertia as stated by CGA-341

$$I = \frac{1.05\ D^3\ L}{E} \tag{4}$$

From this equation, the required moment of inertia is 0.86 $in^4$. Figure 2 shows the dimensions of the stiffening ring. The moment of inertia of this stiffener about its centroid is 1.86 $in^4$. This exceeds the required moment of inertia, therefore the result of equation 2 is valid.

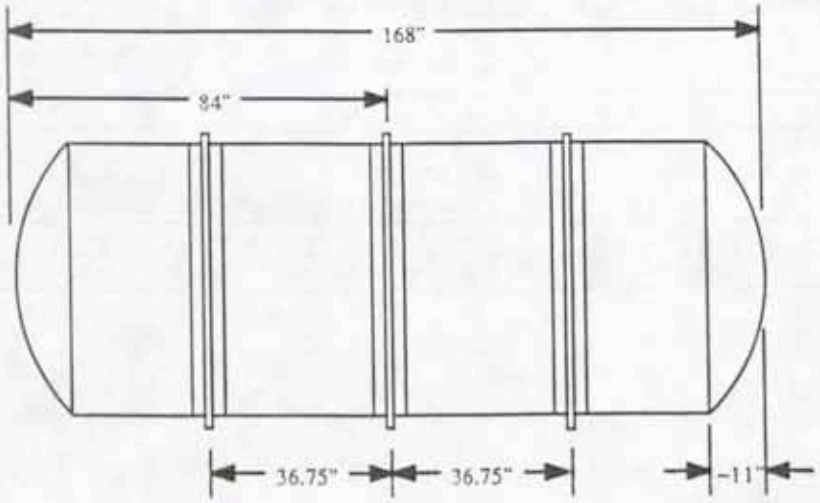


Figure 1. Outer Vessel of the Liquid Nitrogen Storage Dewar #14

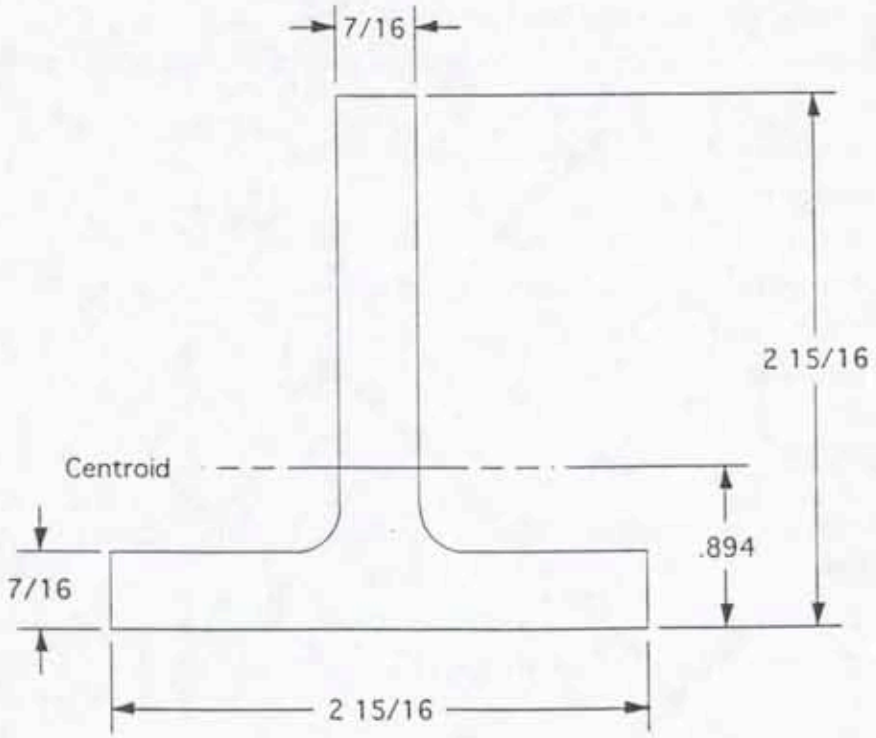


Figure 2. Cross sectional dimensions of the stiffening ring.

| Liquid Nitrogen Storage Dewar #14 | | | | |
|---|---|---|---|---|
| | Cylinder ID (inches) | Cylinder OD (inches) | Cylinder Thickness (inches) | Head Thickness (inches) |
| Inner Vessel | --- | 66.00 | --- | --- |
| Outer Vessel | 83.50 | 84.00 | 0.25 | 0.25 |

NOMENCLATURE

$C_1$ conversion factor = 231 $in^3$/gallon

D outside diameter of outer shell = 84 inches

$D_i$ inner diameter of inner vessel ~ 65.5 inches

E modulus of elasticity = 29 x 10^6 psi

I required moment of inertia of the stiffener itself about a centroidal axis parallel to the outer shell axis, $in^4$

KD depth of the head of the inner vessel ~ 11 inches

L largest distance between stiffening ring centers ~ 40 inches (heads are considered as stiffening rings located one third of the head depth from the head tangent line)

$L_c$ length of the cylindrical portion of the inner vessel ~ 128 inches

$P_c$ collapse pressure, psid

R inside dish radius of head = 84 inches

$t_c$ thickness of the cylindrical portion of the vacuum jacket = 0.25 inches

$t_h$ thickness of the head of the vacuum jacket = 0.25 inches

V volume of the vessel, $in^3$

REFERENCES

[1] Chicago Bridge and Iron Company, "Tables-Formulas", Bulletin No.594, 1977.

[2] "Standard for Insulated Cargo Tank Specification for Cryogenic Liquids", Compressed Gas Association, CGA 341, Arlington Virginia, 3rd edition, 1987.

# 3.5c - PAB LN2 Dewar Compliance with Fermilab ES&H 5032.1TA

## 4.0 VALVES AND INSTRUMENTATION

### A) MANDOTORY PROVISIONS

1.) *Reliable means of measuring the liquid level in the dewar.*
The dewar is equipped with a full trycock valve (MV-094-N) for measuring liquid level. The dewar is also equipped with a Barton level gauge (DPI-100-N) that has been recently calibrated by the Fermilab PAB Calibration Shop.

2.) *Pressure gauge to sense ullage pressure.*
PI-100-N indicates the dewar pressure.

3.) *Fill & withdrawal valve(s).*
MV-92-N provides fill isolation. MV-100-N allows liquid to flow into PAB while MV-93-N allows the venting of vapor.

4.) *Required relief devices.*
SV-99-N and SV-100-N (75 psig set point) can individually protect the dewar from all overpressure scenarios except for filling. PCV-70-N protects the dewar from over filling by shutting the fill line when the dewar vapor space pressure exceeds 87 psig. The dewar is also equipped with two rupture discs designed to open at 105 psig.

5.) *Means, other than the required relief devices, to vent the vessel, i.e., blowdown valve.*
MV-93-N vents the dewar vapor space to ambient as does RV-090-N.

6.) *The MAWP of all valves and instruments must be greater than or equal to the maximum pressure to which they can be exposed.*
The Valve and Instrument list tabulates the maximum pressure for all components. All components have maximum allowable pressures above the various relief device setpoints.

7.) *All valves and instruments which can communicate with cryogens in trapped volumes must be protected with trapped reliefs.*
SV-90-N, SV-96-N, SV-97-N, and SV-98-N, relieve the possible trapped volumes.

### B) STANDARD PRACTICES

1.) *Differential pressure liquid level gauge with isolation valves and a calibration checking feature such as a 3 valve manifold.*
DPI-100-N along with MV-85-N, MV-86-N, and MV-87-N meet this criteria.

2.) *Isolation valve for the pressure gauge*

MV-80-N isolates PI-100-N.

3.) *Full trycock valve.*
MV-94-N is the full trycock valve.

4.) *Primary pressure regulation device other than required relief devices.*
The regulator RV-90-N vents tank pressure in excess of 40 psig.

5.) *Vacuum gauge on vessel.*
MV-91-V isolates a PE-91-V which is a vacuum gauge tube.

6.) *Vacuum pumpout valve, capped off to prevent inadvertent opening.*
MV-90-V isolates the vacuum space and is capped off.

7.) *Drain valve on fill line.*
MV-91-N allows the fill line to be drained.

8.) *Pressure building coil.*
RV-36-N controls the pressure building loop.

C) SUGGESTED PRACTICES

1.) *Isolation valves at both ends of pressure building loop.*
MV-88-N, MV-89-N, MV-95-N, and MV-96-N isolate the pressure building loop.

2.) *Isolation valve for vacuum gauge.*
MV-91-V isolates the vacuum gauge port.

3.) *Top and bottom fill valves.*
MV-92-N is the bottom fill valve. There is no top fill valve.

4.) *Liquid and gas withdrawal valves.*
MV-97-N/MV-100-N provide liquid withdrawal. Gas withdrawal for use inside PAB will be added at a later date.

5.) *Strainer on liquid fill line.*
There is a strainer present (S-91-N).

6.) *Check valve on liquid fill line.*
Check valve CV-90-N prevents the dewar from draining thru the fill line.

7.) *Filters on vacuum pumpout and line gauge.*
These are not present.

## 5.0 PIPING

A) MANDATORY PROVISIONS

1.) *Standoffs to a carbon steel vacuum jacket must ensure an acceptable temperature of the vessel.*
Vessel was designed to ASME code and has operated for years without any vacuum jacket issues.

2.) *Thermal stresses must be taken into account in designing piping and piping supports.*

The piping attached to the dewar was used successfully at PS1 in its current configuration.

3.) *All piping which can be exposed to the vessel pressure must have an MAWP greater than or equal to the vessel MAWP*.
The dewar piping consists of 3 different sizes of stainless steel pipe, all with a safe working pressure far above the dewar MAWP of 75 psig.

*4.)* *All piping which can be exposed to the tanker delivery pressure must have a MAWP greater than or equal to the tanker delivery pressure or must be adequately protected from overpressure.*
PCV-70-N shuts off when the tank vapor space pressure reaches 87 psig. The fill line is 1.900 inch OD with 1.682 inch ID stainless steel pipe with a maximum pressure of 2083 psi. The tanker truck can only deliver 400 psig, thus the supply piping is safe.

*5.)* *All piping which can be exposed to cryogens in trapped volumes must be protected with trapped volume reliefs without an intervening shut-off valve.*
SV-90-N, SV-96-N, SV-97-N, and SV-98-N relieve the possible trapped volumes.

*6.)* *Any portions of the piping system which were not part of the initial vessel pressure test or were modified since that test must be pressure tested in accordance with the rules of Fermilab Safety Manual section 5034. For purposes of the pressure test, the MAWP of piping is taken as the maximum pressure to which the piping can be exposed consistent with 4.), 5.), and 6.).*
All piping will be pneumatically pressure tested.

*7.)* *Piping should be in accordance with ANSI B31.3*
The piping is believed to be in accordance with ANSI B31.3.

B) STANDARD PRACTICES

*1.)* *The delivery tanker flow rate and pressure should be taken to be 200 gpm and 225 psi, respectively.*
These values were taken to be 400 gpm and 400 psig based on conversations and a fax from BOC. It is assumed that the Air Products tankers have similar specifications. PCV-70-N protects the dewar from the possibility of tanker over pressure.

*2.)* *All pipe, valves and fittings should be demonstrated free of leaks at the vessel's MAWP.*
All components will be pressure tested except components that require the dewar itself to be pressurized.

C) SUGGESTED PRACTICES

1.) *Stainless steel is the preferred piping material over copper or aluminum.*
The piping consists of stainless steel.
2.) *Welded connections should be used whenever possible.*
Welding was used where possible.
3.) *Vacuum jacket the withdrawal line whenever possible.*
The liquid withdrawal line for PAB is vacuum jacketed.

## 6.0 RELIEF DEVICES: PIPING & INSTALLATION

### A) MANDATORY PRACTICES

1.) *Consult the ASME, CGA, & API Standards*.
The vessel reliefs were sized according to these standards.
2.) *The liquid container shall be protected by a minimum of two relief devices, installed to remain at ambient temperature during normal operation. Typically these devices would be one relief valve and one burst disc, although two relief valves would be acceptable if all other conditions are met.*
The dewar has two sets of relief devices, which consist of a relief valve paired with a rupture disc. A diverter valve separates them such that either one pair or both pairs relieve the vessel.
3.) *The exhaust of liquid nitrogen reliefs and vents should not impinge on carbon steel vacuum jacket(s) or into areas which may cause harm to people.*
The relief discharges are directed upwards.
4.) *The primary safety relief valves shall be UV stamped and shall meet the applicable requirements of ASME Code Section VIII*.
Both relief valves are code stamped and were sent out and recertified within the last year.
5.) *The design, material, and location of relief devices shall be suitable for their intended service. The primary reliefs shall have direct communication with the vapor space of the container and shall be so installed that the cooling effects of the contents will not prevent their operation.* Either SV-99-N & RD-99-N or SV-100-N and RD-100-N are connected to the dewar vapor space at all times. Several feet separates them from LN2 contact, thus they remain warm while not in operation.
6.) *The vent piping shall be designed to prevent accumulation of moisture at the exhaust and seat area of the relief devices, and to avoid build-up of foreign material which might effect relief capacity*. The relief valves and rupture discs have flappers that protect them from foreign material.
7.) *The inlet and vent piping of relief devices must provide for proper performance by taking into account the effect of inlet*

*pressure losses and back pressure on the operating characteristics of the valve. The nominal size of the inlet and discharge piping and fittings connecting to the pressure relief devices shall be at least equal to the nominal size of the respective ports of the relief devices. Where they are a number of devices discharging into the same manifold, an analysis must be made of the back pressure effects on relief pressure an capacity.*
See included document that describes relief valve sizing. All of these issues are addressed.

8.) *The effects of mechanical (discharge reactive forces) and thermal stresses on relief piping must be examined to assure proper operation of the relief system.*
See included document that describes relief valve sizing. This issue is addressed and found to be negligible.

9.) *Relief devices should be designed and installed so that the possibility of tampering will be minimized.*
It would take a wrench to tamper with the dewar reliefs.

B) SUGGESTED PRACTICES

1.) *The relief system should consist of two sets of two relief devices (one relief valve and one burst disk) with a diverter valve (adequately sized) and a test valve on each side for set point checking.*
The relief system consists of two sets of two relief devices with a diverter valve. MV-101-N and MV-99-N allow for relief valve set point testing.

## 7.0 Relief Device: Sizing

A) MANDOTORY PROVISIONS

1.) *Relief device sizing must satisfy each of the provisions that follow.*
Relief devices were sized according to CGA & API standards.

2.) *Size the reliefs of the lading vessel for the following failures:*
   a) *Loss of insulating vacuum using the CGA formula.*
   The fire case includes loss of insulating vacuum. The relief valve is adequate for fire with a loss of insulating vacuum, thus it is adequate for loss of insulating vacuum without fire.
   b) *Fire condition using CGA formula*
   The fire condition requires 122 SCFM AIR and the relief valve can deliver 731 SCFM.
   c) *Pumping overfill….precautions should be taken to prevent the development of pressure in excess of 116% of the dewars MAWP.*

PCV-70-N shuts off the fill line in 30 ms when the dewar vapor space pressure is equal to 87 psig.

d) *Regulator failure on pressure building coil. Consider a wide open regulator, pressure drop in the piping and maximum heat influx, look at the maximum flow rates possible with the liquid head as the driving force.*
Using the simple and very conservative assumptions that the only liquid flow restriction is the regulator and all liquid turns to vapor, the pressure building flow rate was found to be 192 SCFM which is far short of the relief valve capacity of 731 SCFM.

e) *Pressurization from external sources.*
This system is not in communication with any other systems that could over pressurize it.

3.) *Marked set pressure for the relief devices on the lading vessel shall be determined as follows:*
The relief valve is set at 75 psig and can handle all conditions including fire at 110% (MAWP + 15 psi) – 15 psi. The stamped rupture disk is set at 105 psig which is less than 150% (MAWP +15 psi) – 15 psi.

4.) *Size the reliefs for the vacuum jacket according to the CGA standard.*
The included relief valve sizing document shows that the vacuum relief requirement is 3.7 $in^2$ which is << than the 7.1 $in^2$ area available.

5.) *Set pressure for the relief devices on the vacuum jacket….should be fully open at a pressure not exceeding the internal design pressure of the outer shell.*
Vacuum relief is a parallel plate without springs. It should open at slightly above atmospheric pressure.

6.) *Incorporate entrance and exit losses into pressure drop and capacity calculations.*
The included relief valve sizing document shows that the entrance losses are less than the 3% API recommendation.

7.) *Size for gas or liquid flow thru safety devices using API recommendations.*
The included relief valve sizing document shows that for gas flow under sonic conditions, the relief valves are adequately sized. Liquid sizing was not done because there is no credible scenario where the reliefs vent liquid.

8.) *Size for flashing conditions using API recommendations:*
Not applicable because a scenario involving liquid relief is not credible.

9.) *Trapped volume reliefs should be of adequate capacity to prevent overpressure due to ambient heat input.*

Trapped volume reliefs were sized for fire conditions, thus they can handle ambient conditions.

## 7.0 General

### A) MANDOTORY PROVISIONS

1.) *All dewars "Out-of-Service" must be locked out to prevent inadvertent filling. The key combination for this lock should be controlled by the responsible party. A sign indicating "Dewar Out of Service – DO NOT FILL" should be prominently displayed.*
Currently the dewar fill connection has been removed.

2.) *All dewars must be labeled "LIQUID NITROGEN" and marked with their dewar number.*
This provision has been met.

3.) *All dewars must be labeled with the MAWP, the dewar capacity, the maximum fill level, and a telephone number which can be called to obtain assistance.*
A sign will be posted soon.

4.) *All valves used during filling must be labeled with descriptive function tags.*
Tags will be added to the valves soon.

5.) *All gas or liquid withdrawal valves must be labeled with descriptive function tags.*
Tags will be added to the valves soon.

6.) *Dewars must be adequately protected from vehicular damage.*
The dewar is protected by large shielding blocks.

7.) *The fill connection must be adequately supported.*
This provision has been met.

8.) *Dewars must be adequately supported and restrained.*
This provision has been met.

### B) STANDARD PRACTICES

1.) *Lettering for 8.0 A) 2.) should be 6" high.*
The lettering is 6" high.

2.) *The liquid level indicator and pressure gauge must be in sight of the fill connection and be "redlined" at the maximum operating values.*
The liquid level indicator is within sight of the fill connection, anf the shut off valve protects from over filling.

3.) *A fill procedure should be attached to the dewar in a weatherproof fashion.*
This will be done in the future.

4.) *A flow schematic which includes the normal operating pressure and capacities and settings of relief devices should be attached to the dewar in a weather proof fashion.*
This will be done in the future once the piping arrangement is approved.

5.) *The area at the fill connection and instrumentation used during the filling should be adequately lighted.*
The dewar is out in the open and adequately lit.

6.) *The fill connection should be the CGA standard 1-1/2" 2.4 stub Acme thread.*
This provision has been met. The fill connection is a stainless steel fitting.

7.) *All valves, reliefs, and nozzles should be labeled with valve numbers.*
Brass tags are tied to most valves and will be added to all valves soon.

# 3.5d – LN2 Dewar Fill Line Pressure Test Documentation

Fermilab

Date: 3/29/07

**EXHIBIT B**
**Pressure Testing Permit***

**Type of Test:** [ ]Hydrostatic [X] Pneumatic

**Test Pressure** 440 psig **Maximum Allowable Working Pressure** > 400 psig

**Items to be Tested**
Test to be performed on the PAB liquid nitrogen dewar fill line. Refer to attached sketch. Section to be tested is highlighted in red. See table in sketch for component pressure ratings.

**Location of Test** PAB **Date and Time** TBD

**Hazards Involved**
Remote possibility of pipe or component failure releasing the energy of compressed nitrogen. Nitrogen piping has a pressure rating of 1966 psi. Component ratings are in sketch.

**Safety Precautions Taken**
Test area will be roped off. Test administrators will be inside PAB.

**Special Conditions or Requirements**

**Qualified Person and Test Coordinator** Terry Tope
**Dept/Date** PPD/

**Division/Section Safety Officer** Martha Heflin
**Dept/Date** PPD/

**Results**
Fill line passed pressure test. TERRY TOPE 13329N

**Witness** 13747 **Dept/Date** 4-17-07
(Safety Officer or Designee)

* Must be signed by division/section safety officer prior to conducting test. It is the responsibility of the test coordinator to obtain signatures.

Terry Tope
4.9.07

Schematic and component ratings for pressure test of PAB LN2 dewar fill line.

**LN2 fill line pressure test components**

| Component ID | Manufacturer | Model | Maximum Allowable Working Pressure |
|---|---|---|---|
| PCV-70-N | Messer / Chart | MG97P | 600 psig |
| CV-90-N | Check-All Valve | UN-3-150-SS | 3000 psig |
| SV-90-N | Circle Seal | 5120B-4MP | 2400 psig |
| S-091-N | Mueller | 1715 | 550 psig |
| MV-091-N | Worcester | 1/2 C4416P | 870 psig |
| MV-92-N | Worcester | 1 1/2 C4416P | 870 psig |

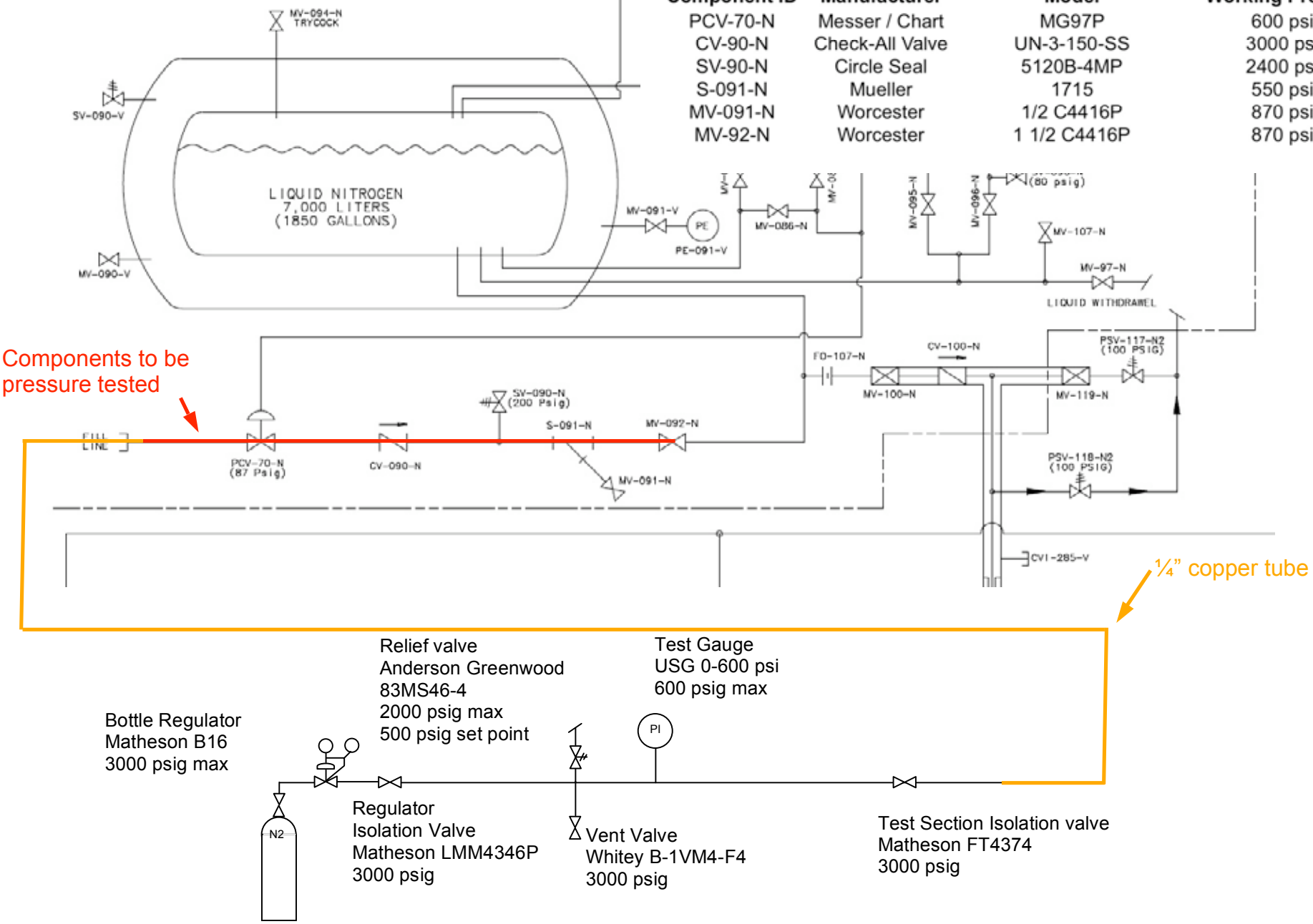

Terry Tope
4.9.07

**Pressure Test Procedures for PAB Nitrogen Dewar Fill Line.**

1. CLOSE MV-92-N, MV-91-N.

2. Plug the exhaust of relief valve SV-90-N.

3. Connect a 1/4" copper tube into dewar fill connection using the adaptor to connect to the standard CGA fitting.

4. Run the tube to the safe location inside PAB

5. Connect tube to test manifold.

6. Pressurize system to 25 psi. Valve off supply and observe test pressure gauge. If pressure holds at 25 psi for 10 minutes, proceed to next step. If leaks occur at this step, fix the leaks. Then resume testing at step 7.

7. Gradually increase the pressure to 150 PSI. Valve supply off and make sure pressure does not fall. Fixing any leak above 25 PSI requires the system to be depressurized and the procedure resumed at step 7.

8. Gradually increase the pressure in increments of 50 PSI up to 440 PSI. Pause for 2 minutes at each increment and valve off the supply to make sure the pressure does not fall and indicate a leak. If leaks are found, depressurize system and fix the leaks. Then repeat steps 7 thru 11

9. At 440 PSI, hold the pressure for 10 minutes.

10. Lower pressure to 100 psig and inspect all joints by the soap bubble method.

11. If leaks are found, depressurize system and fix the leaks. Then repeat steps 7 thru 11. If no leaks are found, depressurize system and disconnect test apparatus.

# 3.5e – LN2 Transfer Line Pressure Test Documentation

Fermilab

Date: 6/7/07

**EXHIBIT B**
**Pressure Testing Permit***

**Type of Test:** [ ]Hydrostatic [X] Pneumatic

**Test Pressure** 110 psig **Maximum Allowable Working Pressure** 100 psig

**Items to be Tested**
Test to be performed inside PAB. Refer to attached sketch. Section to be tested is highlighted in red. See table in sketch for component pressure ratings.

**Location of Test** PAB **Date and Time** TBD 6/7/07

**Hazards Involved**
Remote possibility of pipe or component failure releasing the energy of compressed nitrogen. Most of the pipe is inside a stainless steel vacuum jacket which would act as containment in the event of a tested component failure. The nitrogen piping is rated for 2568 psi. Component ratings are in spreadsheet.

**Safety Precautions Taken**
Test area will be roped off. Test administrators will be a significant distance from piping.

**Special Conditions or Requirements**

**Qualified Person and Test Coordinator** Terry Tope
**Dept/Date** PPD/

**Division/Section Safety Officer** Martha Heflin
**Dept/Date** PPD/

**Results**
Passed pressure test. No pressure drop indicated on gauge and no increase in insulating vacuum. Terry Tope [signature]
173294

**Witness** [signature] Eric McHugh **Dept/Date** PD/ES+H 6.07.07
(Safety Officer or Designee)

* Must be signed by division/section safety officer prior to conducting test. It is the responsibility of the test coordinator to obtain signatures.

Schematic and component ratings for pressure test of PAB LN2 transfer line.

Terry Tope
6.7.07

**LN2 transfer line pressure test components**

| Component ID | Manufacturer | Model | Maximum Allowable Working Pressure |
|---|---|---|---|
| MV-100-N | Cryolab | CV8-086-5WPY?2-ED | 150 psig |
| CV-100-N | Fermilab | 1/2" check valve | >> 100 psig |
| MV-119-N | Cryolab | CV8-084-SWTG2 | 100 psig |
| PSV-117-N2 | Circle Seal | 5100-2MP | 2400 psig |
| PSV-118-N2 | Circle Seal | 5100-2MP | 2400 psig |
| MV-120-N | Cryolab | CV8-086-SWPG2 | 150 psig |
| EV-106-N2 | Asco | 8263G209LT (120 VAC) | 100 psig |
| PT-27-N2 | Setra | 205-2 | 100 psig |
| PI-44-N2 | US Gauge | 0 - 150 psig | 150 psig |
| PSV-101-N2 | Circle Seal | 5100-2MP | 2400 psig |
| EV-105-N2 | Asco | 8263G209LT (120 VAC) | 100 psig |

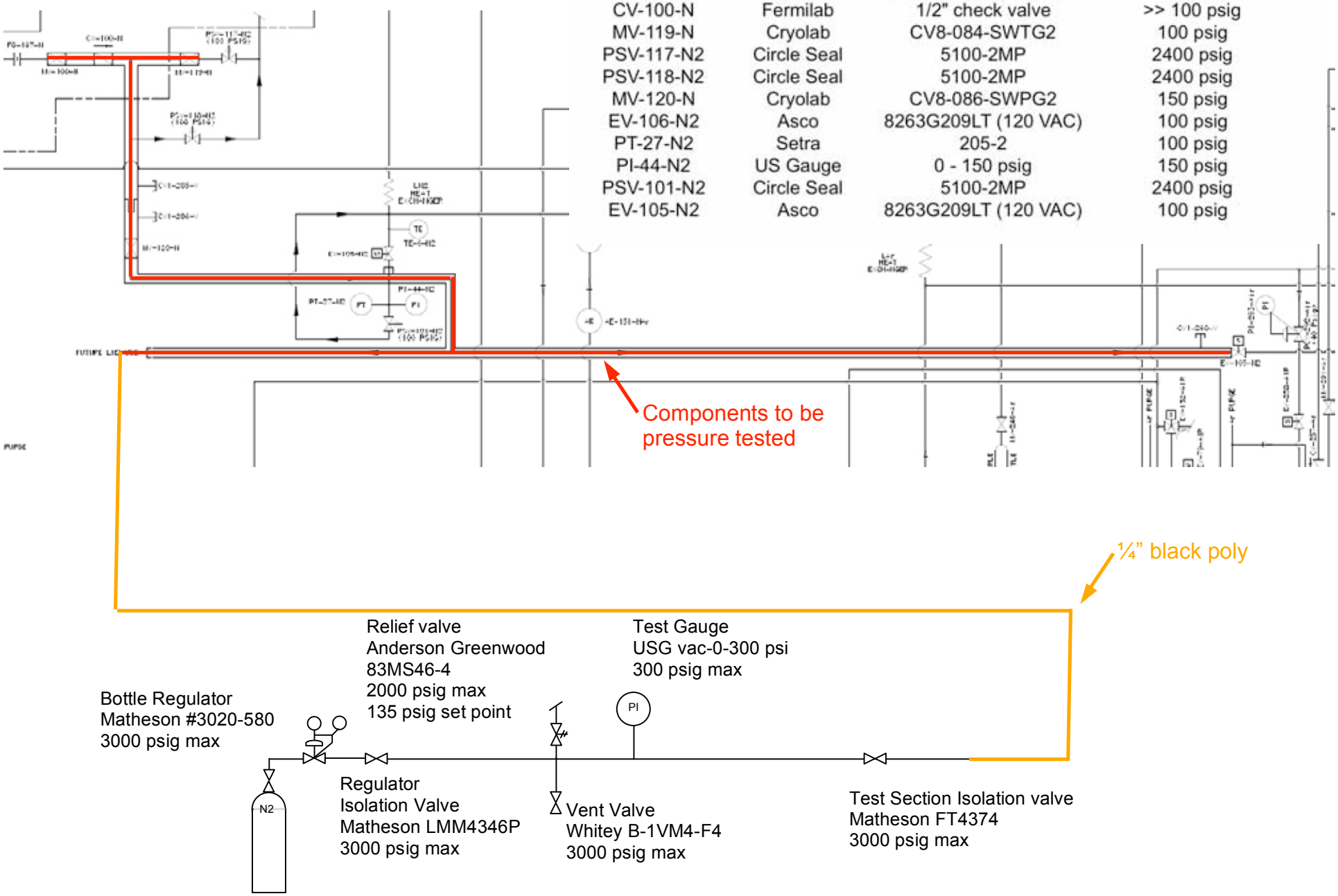

Terry Tope
3.29.06

**Pressure Test Procedures for PAB Nitrogen Dewar Fill Line.**

1. CLOSE MV-100-N.

2. OPEN MV-119-N, MV-120-N.

3. Plug the exhaust of relief valves PSV-117-N2, PSV-118-N2, PSV-101-N.

4. Connect a 1/4” copper tube into the hose intended for future LN2 usage.

5. Run the tube to the safe location inside PAB.

6. Connect tube to test manifold.

7. Pressurize system to 25 psi. Valve off supply and observe test pressure gauge. If pressure holds at 25 psi for 10 minutes, proceed to next step. If leaks occur at this step, fix the leaks. Then resume testing at step 7. Monitor insulating vacuum pressure.

8. Gradually increase the pressure to 50 PSI. Valve supply off and make sure pressure does not fall. Fixing any leak above 25 PSI requires the system to be depressurized and the procedure resumed at step 7. Monitor insulating vacuum pressure.

9. Gradually increase the pressure in increments of 10 PSI up to 110 PSI. Pause for 2 minutes at each increment and valve off the supply to make sure the pressure does not fall and indicate a leak. If leaks are found, depressurize system and fix the leaks. Then repeat steps 7 thru 11. Monitor insulating vacuum pressure.

10. At 110 PSI, hold the pressure for 10 minutes. Monitor insulating vacuum pressure.

11. Lower pressure to 25 psig and inspect all joints by the soap bubble method.

12. If leaks are found, depressurize system and fix the leaks. Then repeat steps 7 thru 11. If no leaks are found, depressurize system and disconnect test apparatus.

# 3.5f – LAr Transfer Line Pressure Test Documentation

FERMILAB
ENGINEERING NOTE

SECTION | PROJECT | SERIAL-CATEGORY | PAGE 2

SUBJECT: LAr transfer line pressure test

NAME: Terry Tope

DATE: 5/2/07 | REVISION DATE

manifold $362 \times 10^{-3}$ Torr

mole sieve $2.61 \times 10^{-2}$ Torr internal ← went up, leak! Leak into mole sieve insulating vacuum.

$1.12 \times 10^{-2}$ Torr external

Transfer $7.41 \times 10^{-1}$ Torr

$O_2$ external $2.61 \times 10^{-2}$ Torr

Looks like molecular sieve bead was crushed in the seal which caused a leak.

Leak 14.3 psia internal

$3.58 \times 10^{-2}$ external

is the leak at the conflat?

Tube OD is 2.375 and ID is 2.1875"

~~Braz~~

Fermilab

Date: 5/10/07

**EXHIBIT B**
**Pressure Testing Permit***

**Type of Test:** [ ]Hydrostatic [X] Pneumatic

**Test Pressure** 440 psig **Maximum Allowable Working Pressure** >400 psig

**Items to be Tested**
Test to be performed on a portion of the PAB liquid argon transfer line that leaked in a previous test. Refer to attached sketch. Section to be tested is highlighted in red. See table in sketch for component pressure ratings.

**Location of Test** PAB **Date and Time** TBD

**Hazards Involved**
Remote possibility of pipe or component failure releasing the energy of compressed nitrogen. Argon piping has a pressure rating of 3487 psi for the stainless steel sections and 1113 psi for the copper sections. Component ratings are in sketch.

**Safety Precautions Taken**
Test area will be roped off. Test administrators will be inside PAB.

**Special Conditions or Requirements**

**Qualified Person and Test Coordinator** Terry Tope
**Dept/Date** PPD/

**Division/Section Safety Officer** Martha Heflin
**Dept/Date** PPD/

**Results**
Filter portion held 440 psig. Passed. Did not leak into vacuum like previous test.
Terry Tope 13329N

**Witness** 13747N **Dept/Date** PDBSH 5.10.07
(Safety Officer or Designee)

* Must be signed by division/section safety officer prior to conducting test. It is the responsibility of the test coordinator to obtain signatures.

Schematic and component ratings for pressure test of PAB LAr transfer line.

Terry Tope
5.4.07

**LAr transfer line pressure test components**

| Component ID | Manufacturer | Model | Maximum Allowable Working Pressure |
|---|---|---|---|
| PSV-203-Ar | Circle Seal | 5100-4MP | 2400 psig |
| MV-204-Ar | Swagelock | SS-8BG-V47 | 1000 psig |
| MV-213-Ar | Swagelock | SS-8BG-V47 | 1000 psig |
| MV-218-Ar | Swagelock | SS-8BG-V47 | 1000 psig |
| PSV-219-Ar | Circle Seal | 5100-2MP | 2400 psig |
| MV-217-Ar | Swagelock | SS-8BG-V47 | 1000 psig |
| MV-366-V | Swagelock | SS-8BG-V47 | 1000 psig |
| MV-461-HAr | Swagelock | SS-8BG-V47 | 1000 psig |
| PSV-249-Ar | Circle Seal | 5100-2MP | 2400 psig |
| MV-202-Ar | Swagelock | SS-4BG-V51 | 1000 psig |
| MV-208-Ar | Swagelock | SS-4BG-V51 | 1000 psig |
| MV-365-V | Swagelock | SS-8BG-V47 | 1000 psig |
| MV-480-HAr | Swagelock | SS-8BG-V47 | 1000 psig |
| PSV-250-Ar | Circle Seal | 5100-2MP | 2400 psig |
| MV-239-Ar | Swagelock | SS-8BG-V47 | 1000 psig |
| MV-244-Ar | Swagelock | SS-8BG-V47 | 1000 psig |

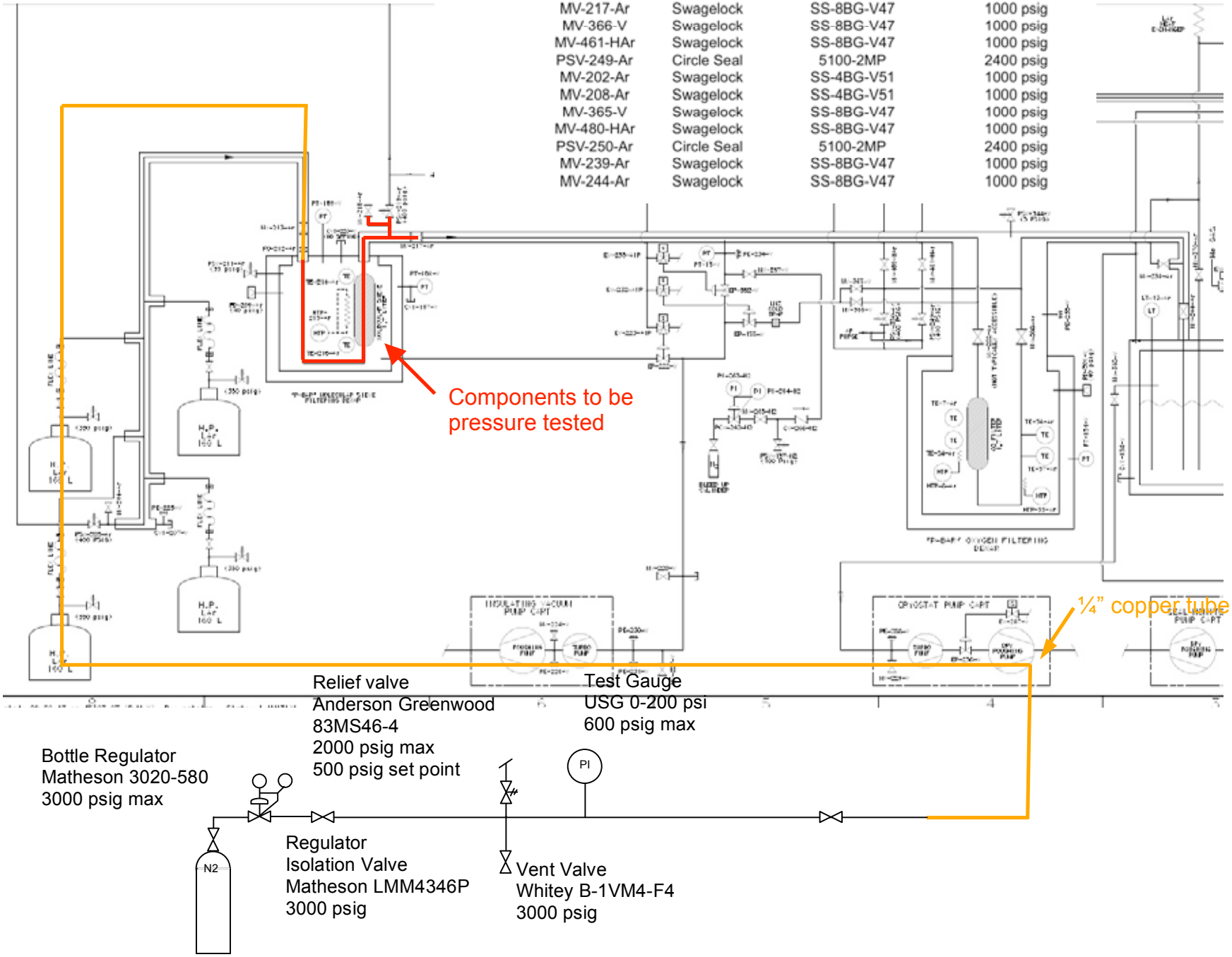

Fermilab

Date: 5/22/07

**EXHIBIT B**
**Pressure Testing Permit***

**Type of Test:** [ ]Hydrostatic [X] Pneumatic

**Test Pressure** 440 psig **Maximum Allowable Working Pressure** >400 psig

**Items to be Tested**
Test to be performed on the PAB liquid argon transfer line. Refer to attached sketch. Section to be tested is highlighted in red. See table in sketch for component pressure ratings.

**Location of Test** PAB **Date and Time** TBD

**Hazards Involved**
Remote possibility of pipe or component failure releasing the energy of compressed nitrogen. Argon piping has a pressure rating of 3487 psi for the stainless steel sections and 1113 psi for the copper sections. Component ratings are in sketch. Most of the piping is inside a vacuum jacket which would act as containment for a failure.

**Safety Precautions Taken**
Test area will be roped off. Test administrators will be inside PAB.

**Special Conditions or Requirements**

**Qualified Person and Test Coordinator** Terry Tope
**Dept/Date** PPD/

**Division/Section Safety Officer** Martha Heflin
**Dept/Date** PPD/

**Results**
CAs transfer line passed at 440 psig. Internal line did not leak into insulating vacuum spaces
Terry Tope 13324N

**Witness** 13747N **Dept/Date** PD ES+H 5-22-07
(Safety Officer or Designee)

* Must be signed by division/section safety officer prior to conducting test. It is the responsibility of the test coordinator to obtain signatures.

Schematic and component ratings for pressure test of PAB LAr transfer line.

Terry Tope
3.29.07

**LAr transfer line pressure test components**

| Component ID | Manufacturer | Model | Maximum Allowable Working Pressure |
|---|---|---|---|
| PSV-203-Ar | Circle Seal | 5100-4MP | 2400 psig |
| MV-204-Ar | Swagelock | SS-8BG-V47 | 1000 psig |
| MV-213-Ar | Swagelock | SS-8BG-V47 | 1000 psig |
| MV-218-Ar | Swagelock | SS-8BG-V47 | 1000 psig |
| PSV-219-Ar | Circle Seal | 5100-2MP | 2400 psig |
| MV-217-Ar | Swagelock | SS-8BG-V47 | 1000 psig |
| MV-366-V | Swagelock | SS-8BG-V47 | 1000 psig |
| MV-461-HAr | Swagelock | SS-8BG-V47 | 1000 psig |
| PSV-249-Ar | Circle Seal | 5100-2MP | 2400 psig |
| MV-202-Ar | Swagelock | SS-4BG-V51 | 1000 psig |
| MV-208-Ar | Swagelock | SS-4BG-V51 | 1000 psig |
| MV-365-V | Swagelock | SS-8BG-V47 | 1000 psig |
| MV-480-HAr | Swagelock | SS-8BG-V47 | 1000 psig |
| PSV-250-Ar | Circle Seal | 5100-2MP | 2400 psig |
| MV-239-Ar | Swagelock | SS-8BG-V47 | 1000 psig |
| MV-244-Ar | Swagelock | SS-8BG-V47 | 1000 psig |

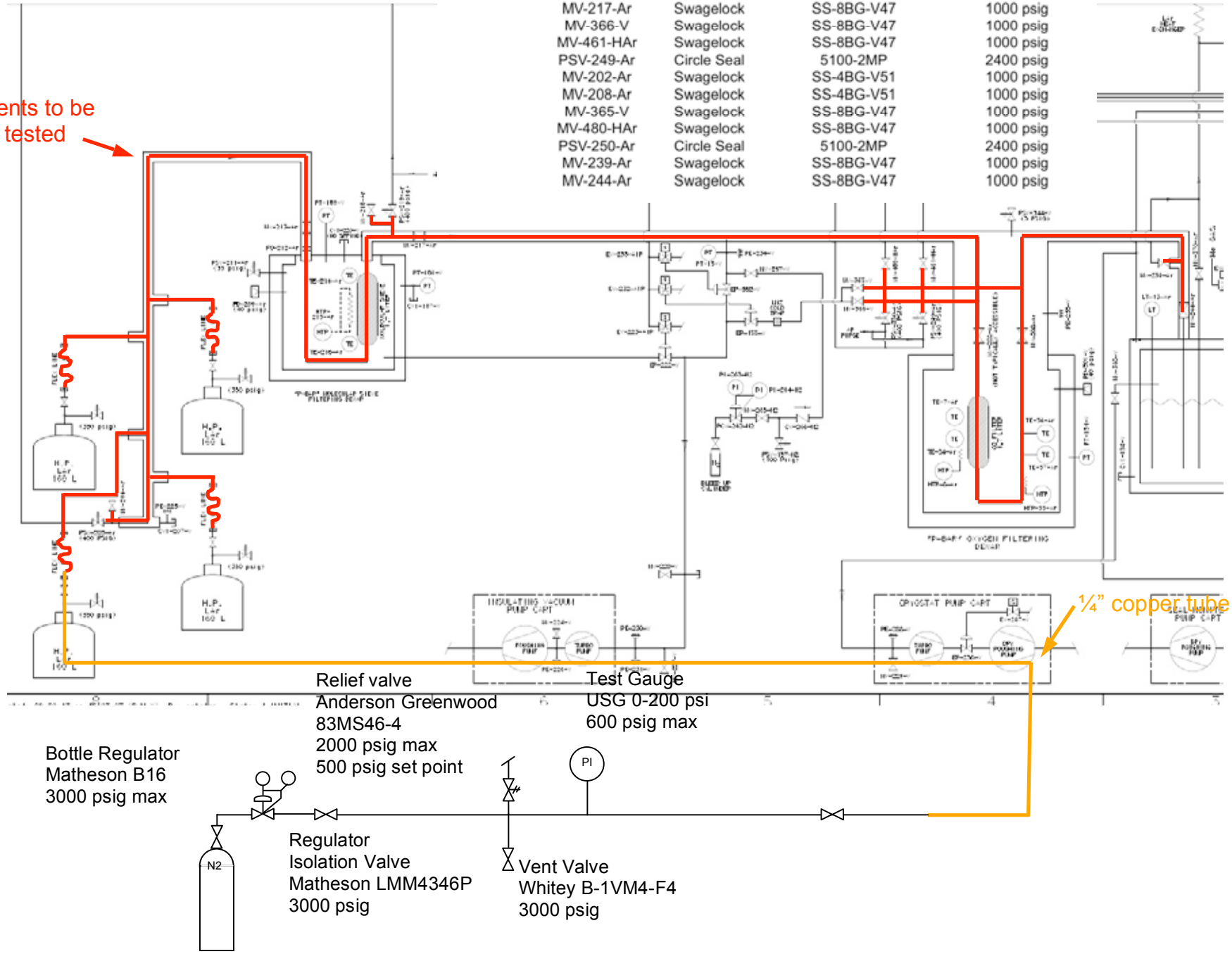

Terry Tope
3.29.06

**Pressure Test Procedures for PAB Argon Transfer Line.**

1. CLOSE MV-204-Ar, MV-218-Ar, MV-365-V, MV-366-V, MV-480-HAr, MV-461-HAr, MV-239-Ar, MV-244-Ar..

2. OPEN MV-213-Ar, MV-217-Ar, MV-202-Ar, MV-208-Ar.

3. Plug the exhaust of relief valves PSV-203-Ar, PSV-219-Ar, PSV-249-Ar, PSV-250-Ar.

4. Connect a 1/4” copper tube into one of the high pressure stockroom dewar connections. Plug the other 3 connections.

5. Run the tube to the safe location inside PAB.

6. Connect tube to test manifold.

7. Pressurize system to 25 psi. Valve off supply and observe test pressure gauge. If pressure holds at 25 psi for 10 minutes, proceed to next step. If leaks occur at this step, fix the leaks. Then resume testing at step 7. Monitor insulating vacuum pressures during entire test.

8. Gradually increase the pressure to 150 PSI. Valve supply off and make sure pressure does not fall. Fixing any leak above 25 PSI requires the system to be depressurized and the procedure resumed at step 7.

9. Gradually increase the pressure in increments of 50 PSI up to 440 PSI. Pause for 2 minutes at each increment and valve off the supply to make sure the pressure does not fall and indicate a leak. If leaks are found, depressurize system and fix the leaks. Then repeat steps 7 thru 11

10. At 440 PSI, hold the pressure for 10 minutes.

11. Lower pressure to 100 psig and inspect all joints by the soap bubble method.

12. If leaks are found, depressurize system and fix the leaks. Then repeat steps 7 thru 11. If no leaks are found, depressurize system and disconnect test apparatus.

# 3.5g – "Luke" Materials Lock Bellows and Gate Valve Pressure Test

Fermilab

Date: 6/6/07

**EXHIBIT B**
**Pressure Testing Permit***

**Type of Test:** [ ]Hydrostatic [X] Pneumatic

**Test Pressure** 38.5 psig **Maximum Allowable Working Pressure** Estimated as 35 psig psig

**Items to be Tested**
Test to be performed on a portion of the PAB FLARE liquid argon materials test station. This includes a modified vacuum gate valve and a welded edge bellows. Determining the internal pressure capability of the bellows is the reason for this test.

**Location of Test** PAB **Date and Time** TBD

**Hazards Involved**
Gate valve has been modified to handle internal pressure – analyzed with ASME code (see attached). Bellows is of unknown origin . However with its internal rod support and construction it should be capable of withstanding 35 psig. Most likely hazard is failure of the bellows.

**Safety Precautions Taken**
Test area will be roped off. Test administrators will be a significant distance from pressurized components. This is a low pressure test with a small amount of stored energy. Bellows is weakest link and if it fails it will fail at a welded edge. This will cause the bellows to leak. It will not fail in an explosive manner.

**Special Conditions or Requirements**

**Qualified Person and Test Coordinator** Terry Tope
**Dept/Date** PPD/

**Division/Section Safety Officer** Martha Heflin
**Dept/Date** PPD/

**Results**
Components passed test. Terry Tope 13329N
6/11/07

**Witness** Eric McHugh **Dept/Date** PD/ES+H 6.11.07
(Safety Officer or Designee)

* Must be signed by division/section safety officer prior to conducting test. It is the responsibility of the test coordinator to obtain signatures.

Terry Tope
6.6.07

Schematic and component ratings for pressure test of “Luke” bellows and gate valve.

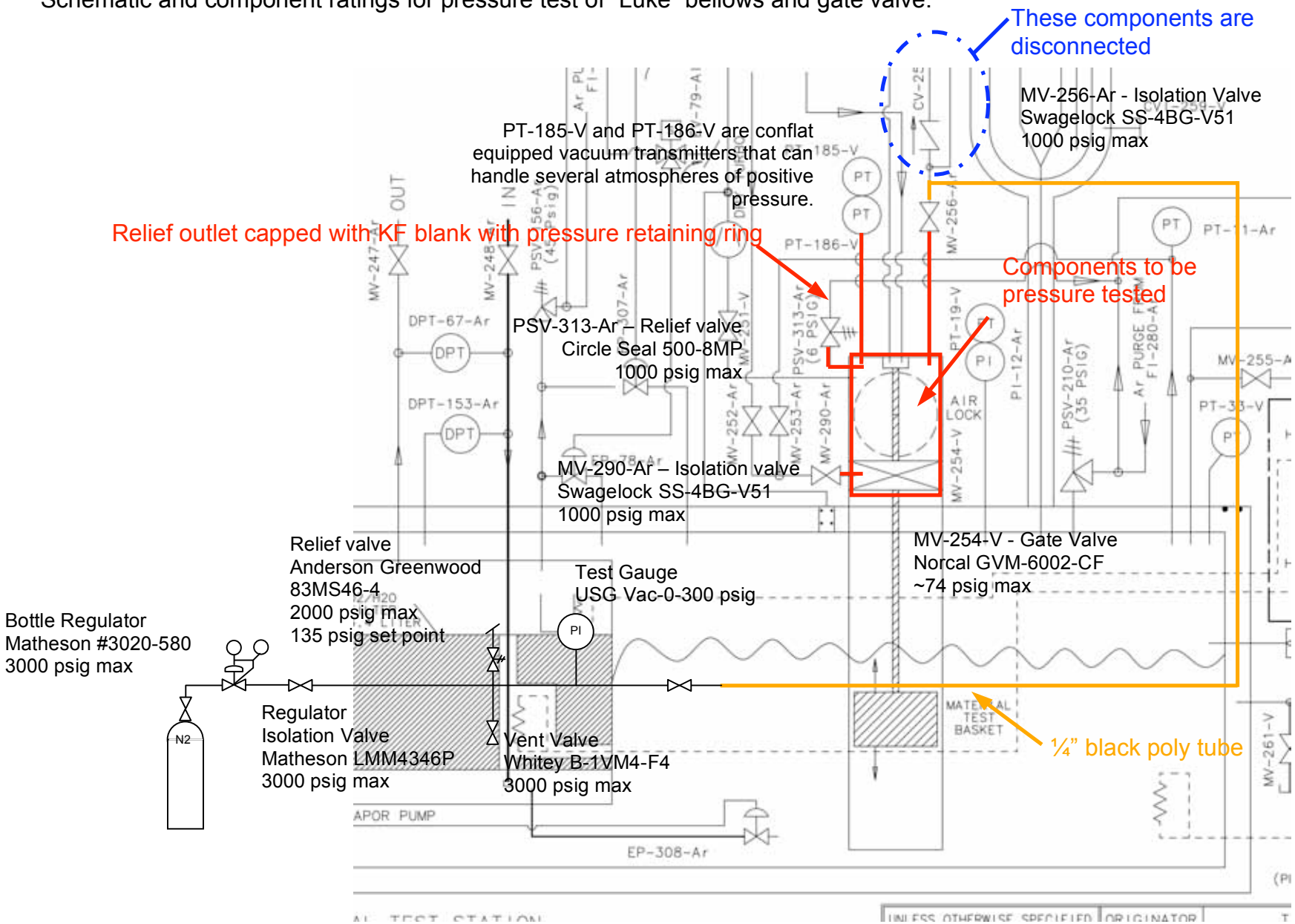

Terry Tope
6.7.07

**Pressure Test Procedures for "Luke" bellows pressure test**

1. CLOSE MV-254-V and MV-290-Ar.

2. OPEN MV-256-Ar.

3. Plug the exhaust of relief valve PSV-313-Ar with a KF blank off and a pressure retaining ring.

4. Disconnect vent piping from MV-256-Ar and connect a 1/4" black poly tube.

5. Run the tube to the safe location inside PAB.

6. Connect tube to test manifold.

7. Pressurize system to 10 psi. Valve off supply and observe test pressure gauge. If pressure holds at 10 psi for 2 minutes, proceed to next step. If leaks occur at this step, fix the leaks.

8. Gradually increase the pressure in increments of 5 PSI up to 38.5 PSI. Pause for 2 minutes at each increment and valve off the supply to make sure the pressure does not fall and indicate a leak. If leaks are found, depressurize system and fix the leaks. Then repeat previous step.

9. At 38.5 PSI, hold the pressure for 10 minutes.

10. Depressurize system.

MV-254-V

MV-254-V is a Norcal manually operated viton seal vacuum gate valve constructed from 304 stainless steel. The valve attaches to the cryostat using 8 inch conflat flanges. The valve was chosen to create a large aperture for passing materials thru that can be sealed. The valve is not rated by Norcal for positive internal pressure.

The structurally weakest part of the valve appears to be large flat rectangular panel between the conflat flange and the thick end flange that holds the actuating mechanism. To investigate the stress in this part, the section was analyzed as an unstayed flat head per section UG-34 of the ASME code.

The maximum pressure for this valve can be calculated from

$$t = d\sqrt{\frac{ZCP}{SE}} \Rightarrow P = \left(\frac{t}{d}\right)^2 \frac{SE}{ZC} \text{ and } Z = 3.4 - \frac{2.4d}{D} \text{ where}$$

*t* = minimum required thickness of the flat heat.

*d* = length of short span, = 6 inches.

*D* = long span of noncircular heads measured perpendicular to short span, = 7 9/16 inches.

*Z* = factor of noncircular heads and covers that depends on the ratio of the short span to the long span

*C* = a factor depending upon the method of attachment of head, = 0.33 from Figure UG-34.

*P* = internal design pressure, 35 psi.

*S* = maximum allowable stress value in tension, = 18,800 psi for 304 SS.

*E* = joint efficiency from Table UW-12, taken as 0.5 to be conservative.

$$Z = 3.4 - \frac{2.4(6)}{\left(7 + \frac{9}{16}\right)} = 1.496,\ P = \left(\frac{0.125}{6.0}\right)^2 \frac{(18800)0.5}{1.496(0.33)} = 8.3 psi.$$

The maximum pressure this valve housing should see is 8.3 psid internal based on the large flat section.

The side of the valve consists of a strip of 1/8 inch thick stainless steel that measures 1.125" (*d*) x 13" (*D*). Applying the above equations gives an estimate of the strength of the maximum pressure this part of the valve body can withstand.

$$Z = 3.4 - \frac{2.4(1.125)}{(13)} = 3.19,\ P = \left(\frac{0.125}{1.125}\right)^2 \frac{(18800)0.5}{3.19(0.33)} = 110 psi$$

The valve body is only pressurized if the valve is open. Otherwise the valve body is sealed off from the vapor space of Luke. When the valve is open, excess pressure is vented thru PSV-313-Ar which is set at 6 psig. However, PSV-313-Ar has less capacity then PSV-210-Ar. To ensure the valve body does not rupture if the gate valve is open when warm material is submerged into

the liquid argon, it is strengthened by encasing the housing in 1/2 inch thick 6061-T6 Aluminum which as an ASME allowable stress of 10,500 psi. Applying the above equation again, an estimate is made for the strength of this housing

$P = \left(\frac{0.5}{6.0}\right)^2 \frac{(10500)0.5}{1.496(0.33)} = 73.9\,psi$. This exceeds the 35 psig relief valve set point.

# 3.5h - LN2 Dewar Piping Pressure Test

Fermilab

Date: 6/15/07

**EXHIBIT B**
**Pressure Testing Permit***

**Type of Test**: [ ]Hydrostatic [X] Pneumatic
.

**Test Pressure** 100 psig **Maximum Allowable Working Pressure** 400 psig

**Items to be Tested**
Test to be performed on the PAB liquid nitrogen piping. Refer to attached sketch. Section to be tested is highlighted in red. See table in sketch for component pressure ratings. This is mainly a leak check.

**Location of Test** PAB **Date and Time** TBD

**Hazards Involved**
Remote possibility of pipe, weld, or component failure releasing the energy of compressed nitrogen. Component ratings are in sketch. Lowest rated component is rated at 400 psig.

**Safety Precautions Taken**
Test area will be roped off.

**Special Conditions or Requirements**

**Qualified Person and Test Coordinator** Terry Tope
**Dept/Date** PPD/

**Division/Section Safety Officer** Martha Heflin
**Dept/Date** PPD/

**Results**

**Witness** _____ **Dept/Date** _____
(Safety Officer or Designee)

* Must be signed by division/section safety officer prior to conducting test. It is the responsibility of the test coordinator to obtain signatures.

Terry Tope
6.15.07

Schematic and component ratings for pressure test of PAB LN2 dewar piping.

| Component ID | Manufacturer | Model | Maximum Allowable Working Pressure |
|---|---|---|---|
| MV-97-N | Nibco | ----- | 600 psig |
| MV-107-N | Nibco | ----- | 600 psig |
| MV-95-N | Nibco | ----- | 600 psig |
| MV-96-N | Nibco | ----- | 600 psig |
| SV-96-N | Circle Seal | 5159B-4MP-80 | 2400 psig |
| RV-36-N | Cash Acme | B | 400 psig |
| SV-97-N | Circle Seal | 5159B-4MP-80 | 2400 psig |
| MV-88-N | Nibco | ----- | 600 psig |
| SV-98-N | Circle Seal | 5159B-4MP-80 | 2400 psig |
| MV-89-N | Nibco | ----- | 600 psig |

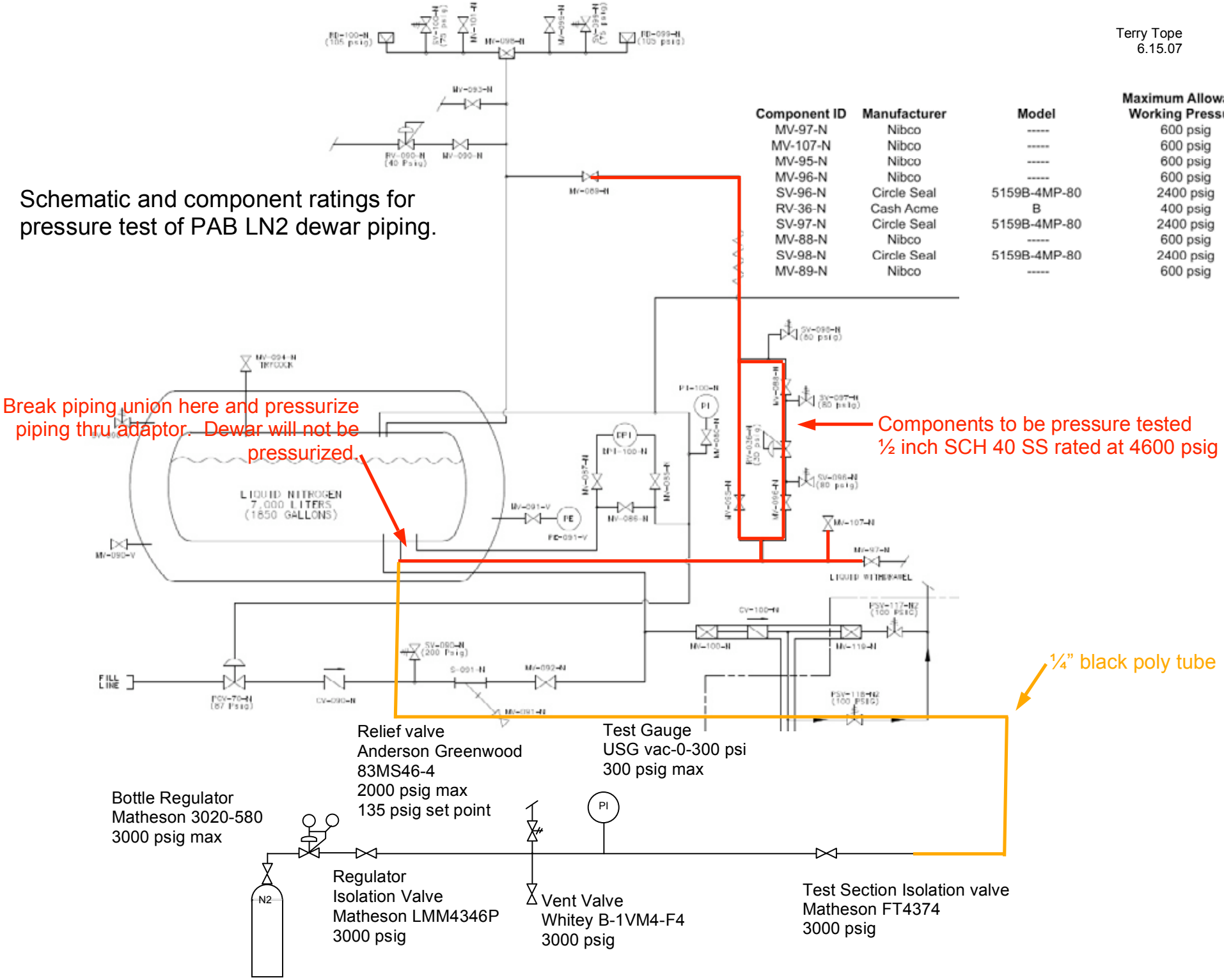

Terry Tope
6.15.07

**Pressure Test Procedures for PAB Nitrogen Dewar Piping**

1. CLOSE MV-97-N, MV-107-N, and MV-89-N.

2. Plug the exhaust of relief valves SV-96-N, SV-97-N, and SV-98-N.

3. OPEN MV-95-N, MV-96-N, and MV-88-N.

4. Connect a 1/4” black poly tube into liquid withdrawal line after opening piping union and connecting union to compression adaptor.

5. Run the tube to the safe location away from the piping.

6. Connect tube to test manifold.

7. Pressurize system to 25 psi. Valve off supply and observe test pressure gauge. If pressure holds at 25 psi for 5 minutes, proceed to next step. If leaks occur at this step, fix the leaks. Then resume testing at step 7.

8. Gradually increase the pressure in increments of 25 PSI up to 100 PSI. Pause for 2 minutes at each increment and valve off the supply to make sure the pressure does not fall and indicate a leak. If leaks are found, depressurize system and fix the leaks. Then repeat steps 7 thru 10.

9. At 100 PSI, hold the pressure for 10 minutes.

10. Lower pressure to 25 psig and inspect all joints by the soap bubble method.

11. If leaks are found, depressurize system and fix the leaks. Then repeat steps 7 thru 10. If no leaks are found, depressurize system and disconnect test apparatus.

## 4.1a - Relief Valve Sizing for the FLARE Materials Test Station Cryostat and Supporting Documentation

The pressure relief devices for the FLARE Materials Test Station Cryostat were sized according to the Compressed Gas Association's CGA S-1.3—1995 document. This document is entitled, "Pressure Relief Device Standards Part 3—Stationary Storage Containers for Compressed Gases." In section 4.1.1 it states, "…each container shall be provided with a primary system of one or more pressure relief devices and a secondary system of one or more pressure relief valves or rupture disks or buckling pin devices."

**This vessel (PPD ID# 10100) is equipped with two pressure relief valves (PSV-210-Ar and RD-302-Ar). The basic vessel geometry is shown in Figure 4.1a.1. The relief valve is set at the vessel MAWP of 35 psig while the rupture disk is set at 55 psig which is slightly less than 150% of MAWP.**

Fire Condition

First the fire condition is considered as it is more difficult to relieve than any other scenario. To begin the calculation, an estimate of the relief capacity required is computed. This number is then corrected for pressure drop and temperature rise in the line that leads to the reliefs if required. In CGA section 5.3.3 the following equation is used to calculate the minimum required flow capacity

$$Q_a = FG_iUA^{0.82}$$

where:

*U* = Overall heat transfer coefficient to the liquid, $\frac{Btu}{hr \cdot ft^2 \cdot {}^oF}$.

*F* = Correction factor for pressure drop and temperature rise in line to relief valve.

*A* = Average surface area of the inner and outer vessels, 25.90 $ft^2$ (see Figure 4.1a.2 for key dimensions).

$G_i$ = Gas factor for insulated containers.

$Q_a$ = Flow capacity required at applicable flow rating pressure and 60 $^oF$ in cubic feet per minute of free air.

First the overall heat transfer coefficient to the liquid must be computed. For the fire condition it was assumed that the outer vessel is exposed to an environment that is at 1200 $^oF$ (922 K) and the vacuum space between the inner and outer vessel has been filled with air at atmospheric pressure (air has a higher thermal conductivity than argon). The inner vessel wall will be at the saturation temperature of liquid argon at the flow rating pressure. The super insulation around the inner vessel is ignored because it may deteriorate in a fire. The relief valve is set at 35 psig. For the fire condition it must be ensured that the pressure does not exceed 121% MAWP. Thus the flow rating pressure is 1.21(35+15) -15, or 45.5 psig. The saturation temperature of liquid argon at 45.5 psig is 185.8 $^oR$ (103.2 K).

Several heat transfer mechanisms are considered for the fire condition. Two separate heat transfer paths are modeled. The first path involves convection and radiation from the environment to the vertical sidewalls of the cryostat, conduction thru these sidewalls, convection and radiation thru the annular vacuum space while filled with air, and conduction thru the inner vessel sidewall into the liquid argon. The second path considers convection and radiation to the thick top flange of the cryostat, conduction thru this flange, and radiation from this flange to the liquid argon. Convection from the top flange to the liquid argon is not considered because the venting gas will not flow in a manner that transfers heat to the surface of the cryogen. The vented gas will intercept some of the heat arriving from the top flange before it reaches the liquid surface. This reduction in heat input is ignored due to the difficulty of calculating heat transfer from a multi-dimensional gas flow. This omission is a conservative assumption. The two heat transfer paths are only coupled in that they both transfer heat into the liquid argon. Heat transfer to the bottom of the cryostat was considered negligible because the bottom of the cryostat is flush with the concrete floor and will not be exposed to fire. All heat transfer equations were

solved simultaneously in EES (Engineering Equation Solver) which provided temperature and pressure dependent fluid properties and temperature dependent solid thermal properties.

First the calculations related to path 1 are described. Figure 4.1a.2 helps relate the equations to the cryostat. The details of the EES computation file are available in the appendix. The heat rates given in watts are the exact solution given by EES. The equations listed in this document have rounded values that when computed won't match the listed heat rate exactly.

Radiation heat transfer from the environment to the outer vessel vertical walls was modeled as a small convex object in a large cavity (Equation 13.27 from Incropera and Dewitt) where

$$q_{1-2rad} = \sigma A_2 \varepsilon_2 \left(T_1^4 - T_2^4\right) = \frac{5.67x10^{-8} W}{m^2 \cdot K^4}\left(2.1682m^2\right)\left(0.7\right)\left[\left(922K\right)^4 - \left(867.72K\right)^4\right] = 13402W \ .$$

Convective heat transfer to the outer vessel walls was modeled as free convection on a vertical flat plate combining equations 9.24, 9.25, and 9.26, from Incropera and Dewitt

$$q_{1-2conv} = \left\{0.825 + \frac{0.387\left(\dfrac{g\beta\left(T_1 - T_2\right)L^3}{\alpha_{air}\nu_{air}}\right)^{1/6}}{\left[1 + \left(\dfrac{0.492}{\Pr}\right)^{9/16}\right]^{8/27}}\right\}^2 \left(\frac{k_{air}}{L_{ext}}\right) A_s\left(T_1 - T_2\right)$$

$$q_{1-2conv} = \left\{0.825 + \frac{0.387\left(\dfrac{9.81\dfrac{m}{s^2}\dfrac{1}{\dfrac{\left(922+867.72\right)}{2}K}\left(922-867.72\right)K\left(1.118m\right)^3}{\left(0.0001404\dfrac{m^2}{\sec}\right)\left(0.00009898\dfrac{m^2}{\sec}\right)}\right)^{1/6}}{\left[1+\left(\dfrac{0.492}{0.7049}\right)^{9/16}\right]^{8/27}}\right\}^2 \left(\frac{0.06202\dfrac{W}{m\cdot K}}{1.118m}\right) 2.168m^2\left(922-867.72\right)K = 342W \ .$$

Conduction thru the thin stainless steel vacuum jacket is included in the model and the thermal resistance it presents is negligible. Conduction is computed from Incropera and Dewitt's equation 3.27 which gives the heat transfer rate for radial conduction in a cylinder

$$q_{2-3cond} = \frac{2\pi L_{ext} k_{ss}\left(T_2 - T_3\right)}{\ln\left(\dfrac{r_3}{r_2}\right)} = \frac{2\pi\left(1.118m\right)\dfrac{23.544W}{m\cdot K}\left(867.718 - 867.126\right)K}{\ln\left(\dfrac{0.30877m}{0.30658m}\right)} = 13744W \ .$$

Radiation exchange between the vacuum jacket and the inner vessel was computed using equation 13.25 from Incropera and Dewitt which applies to concentric cylinders.

$$q_{3-5rad} = -\frac{\sigma A_5\left(T_5^4 - T_3^4\right)}{\frac{1}{\varepsilon_5} + \frac{1-\varepsilon_3}{\varepsilon_3}\left(\frac{r_5}{r_3}\right)} = \frac{\frac{5.67x10^{-8}W}{m^2 \cdot K^4}\left(1.987m^2\right)\left(867.126^4 - 105.028^4\right)K^4}{\frac{1}{0.1} + \frac{1-0.7}{0.7}\left(\frac{0.2830m}{0.3066m}\right)} = 6126W$$

The convective heat transfer rate across the thin layer of air in the annular space was determined using equation 4.101 from A. F. Mills which gives the three correlations for the Nusselt number (shown below) for large aspect ratio enclosures with heated and cooled walls and recommends using the largest Nusselt number of the three, which for this case is $Nu_2$.

$$Nu_1 = 0.0605 Ra_L^{1/3}, Nu_2 = \left\{1 + \left[\frac{0.104 Ra_L^{0.293}}{1 + \left(\frac{6310}{Ra_L}\right)^{1.36}}\right]^3\right\}^{1/3}, Nu_3 = 0.242\left(\frac{Ra_L}{\frac{H}{L}}\right)^{0.272}$$

Combining the standard relationships for Nusselt number, Rayleigh number, and the convective heat transfer rate equation yields

$$q_{3-5conv} = \left\{1 + \left[\frac{0.104\left(\frac{g\beta\left(T_5 - T_3\right)L_{annular}^{\ 3}}{\alpha_{air}\nu_{air}}\right)^{0.293}}{1 + \left(\frac{6310}{\left(\frac{g\beta\left(T_5 - T_3\right)L_{annular}^{\ 3}}{\alpha_{air}\nu_{air}}\right)}\right)^{1.36}}\right]^3\right\}^{1/3}\left(\frac{k_{air}}{L_{annular}}\right)A_5\left(T_5 - T_3\right)$$

which results in the following when the numbers are plugged in.

$$q_{3-5conv} = \left\{ 1 + \left[ \frac{0.104 \left( \frac{9.81 \frac{m}{s^2} \frac{1}{\frac{(867.126+105.028)}{2} K} (867.126-105.028) K (0.0236217m)^3}{\left(0.000051899 \frac{m^2}{\sec}\right)\left(0.000036148 \frac{m^2}{\sec}\right)} \right)^{0.293}}{1 + \left( \frac{6310}{\left( \frac{9.81 \frac{m}{s^2} \frac{1}{\frac{(867.126+105.028)}{2} K} (867.126-105.028) K (0.0236217m)^3}{\left(0.000051899 \frac{m^2}{\sec}\right)\left(0.000036148 \frac{m^2}{\sec}\right)} \right)} \right)^{1.36}} \right]^3 \right\}^{1/3} \left( \frac{0.03864 \frac{W}{m \cdot K}}{0.0236217m} \right) 1.9869 m^2 (867.126-105.028) K = 7618W$$

Conduction thru the thin stainless steel inner vessel wall is included in the model and the thermal resistance is negligible. Conduction is computed from Incropera and Dewitt's equation 3.27

$$q_{5-6cond} = \frac{2\pi L_{ext} k_{ss} (T_5 - T_6)}{\ln\left(\frac{r_6}{r_5}\right)} = \frac{2\pi (1.1176m) \frac{9.3404W}{m \cdot K} (105.0282 - 103.2336) K}{\ln\left(\frac{0.282956m}{0.280543m}\right)} = 13744W$$

The second heat transfer path starts with radiation and convective heat transfer to the top flange of the cryostat. The hardware attached to the top of the flange is ignored. Although the attached hardware increases the surface area of the flange, the contact resistances at the flanged attachment points and the thermal resistance associated with conduction thru the thin walls of the stainless steel tubes that support the flanges greatly limit additional heat input into the flange.

Radiation heat transfer to the top and sides of the flange was modeled as a small convex object in a large cavity (Equation 13.27 from Incropera and Dewitt) where

$$q_{1-11rad} = \sigma A_{11} \varepsilon_{11} \left(T_1^4 - T_{11}^4\right) = \frac{5.67x10^{-8} W}{m^2 \cdot K^4} (0.5225m^2)(0.7)\left[(922K)^4 - (844.236K)^4\right] = 4452W .$$

Convective heat transfer to the top flange is modeled as the upper surface of a cooled plate using equation 9.32 from Incropera and Dewitt which results in the following when the Rayleigh number and Nusslet number are plugged into the convective heat transfer equation.

$$q_{1-11conv} = 0.27\left(\frac{g\beta(T_1 - T_{11})L_{top}^{\ 3}}{\alpha_{air}\nu_{air}}\right)^{1/4}\left(\frac{k_{air}}{L_{top}}\right)A_{11}(T_1 - T_{11})$$

$$q_{1-11conv} = 0.27\left(\frac{9.81\frac{m}{s^2}\frac{1}{\frac{(922+844.236)}{2}K}(922-844.236)K(0.2381m)^3}{\left(0.0001376\frac{m^2}{\sec}\right)\left(0.00009689\frac{m^2}{\sec}\right)}\right)^{1/4}\left(\frac{0.06143\frac{W}{m\cdot K}}{0.2381m}\right)0.5225m^2(922-844.236)K = 86.57$$

The radiation and convective heat loads are then conducted thru the top flange which was modeled as 1D conduction using the entire cross-sectional area of the flange

$$q_{11-10cond} = \frac{k_{ss}A_{10}(T_{11}-T_{10})}{L_{10}} = \frac{\frac{23.082W}{m\cdot K}(0.3832m^2)(844.236-824.687)K}{0.0381m} = 4538W$$

The heat then radiates from the top flange to the liquid argon. Heat input will cause vapor to be generated which will flow out the relief valve. At the high rate of vapor generation during a fire, a convection cell transferring heat from the underside of the flange to the liquid surface will not form. Instead, vapor leaving the cryostat will remove heat from the flange as it exits. The vapor being relieved intercepts heat before it reaches the liquid argon. Due to the difficulty of modeling heat transfer that results from a three dimensional gas flow, this interception of heat is ignored which is the conservative approach.

Radiation from the top flange to the liquid argon is modeled as exchange between two parallel planes using Incropera and Dewitt equation 13.24 where

$$q_{10-12rad} = \frac{A_{12}\sigma(T_{10}^4 - T_{12}^4)}{\frac{1}{\varepsilon_{10}}+\frac{1}{\varepsilon_{12}}-1} = \frac{0.2473m^2\frac{5.67x10^{-8}W}{m^2\cdot K^4}(824.687^4 - 103.234^4)K^4}{\frac{1}{0.7}+\frac{1}{1.0}-1} = 4538W$$

The combined heat load from both paths is 13744 + 4538 = 18282 W. For the CGA calculation this must be converted to an overall heat transfer coefficient to the liquid.

$$h = \frac{q}{A\Delta T} = \frac{18282W}{2.408m^2(922-103.234)K}\times\frac{1}{1W}\frac{1J}{\sec}\times\frac{1Btu}{1055.06J}\times\frac{3600\sec}{hr}\times\frac{1m^2}{10.7639ft^2}\times\frac{1K}{1.8R} = 1.633\frac{Btu}{hr\cdot ft^2\cdot{}^\circ F}$$

To calculate the initial estimate of the relief capacity needed, a gas factor, $G_i$, must be computed. When the flow rating pressure is less than 40% of the critical pressure ($\frac{60.2psia}{705.4psia}\cdot 100 = 8.5\%$), the following is used to compute $G_i$.

$$G_i = \frac{73.4(1660 - T)}{CL}\sqrt{\frac{ZT}{M}}$$

where

*L* = Latent heat of product at flow rating pressure, 63.33 $\frac{Btu}{lb_m}$ for saturated conditions at 60.2 psia.

.

*C* = Constant for vapor related to ratio of specific heats ($k=c_p/c_v$) at standard conditions. *k* = 1.67 for Argon at 60 $^oF$ and 14.696 psia which corresponds to *C* = 378.

*Z* = Compressibility factor for saturated vapor at 60.2 psia

$$Z = \frac{Pv}{RT}, \qquad Z = \frac{60.2(0.7531)144}{\frac{1545}{39.948}(185.8)} = 0.909\,.$$

*T* = Flow rating temperature, 185.8 $^oR$.

*M* = Molecular weight of gas, 39.948.

*v* = specific volume, saturated vapor at flow rating pressure of 60.2 psia, 0.7531 $\frac{ft^3}{lb_m}$.

$G_i$ is caluculated to be $\frac{73.4(1660-185.8)}{378\cdot 63.33}\sqrt{\frac{0.909\cdot 185.8}{39.948}} = 9.30$.

The uncorrected volumetric flow rate was found to be

$$Q_{ae} = 1.0\cdot 9.30\cdot 1.633\cdot 25.90^{0.82} = 219\frac{ft^3}{\min} \text{ of free air}$$

The relief valve is attached to the cryostat thru piping of length less than 2 feet, thus the correction factor F does not have to be calculated according to CGA section 5.1.4

The primary relief is an Anderson Greenwood Type 81 with the F orifice. Anderson Greenwood provides the following sizing formula $A = \frac{V\sqrt{MTZ}}{6.32CKP_1}$ where

*A* = required orifice area, $in^2$.

*V* = required capacity, 219 SCFM for free air.

*M* = molecular weight of gas, 29 for air (The CGA formula converts the required argon mass flow rate to air).

*T* = relief temperature, 520 $^oR$ for air at standard conditions.

*Z* = compressibility factor, 1.0

*C* = gas constant based on ratio of specific heats, 356 for air

*K* = nozzle coefficient, 0.816 (derived from manufacturer testing)

$P_1$ = inlet flowing pressure, psia = 1.21 x (35 + 15) -15 + 14.7 = 60.2 psia

$$A = \frac{219\sqrt{29 \cdot 520 \cdot 1.0}}{6.32 \cdot 356 \cdot 0.816 \cdot 60.2} = 0.243 in^2$$

The "F" size Anderson Greenwood relief has an orifice of 0.307 $in^2$ which is larger than the required 0.243 $in^2$ and thus the relief valve is adequate for the fire condition.

Loss of Vacuum Condition

Because the fire condition includes atmospheric air in the vacuum space, the fire calculation also indicates the relief capacity is more than adequate for an operational loss of insulating vacuum.

Vapor Generation Due to Internal Heaters

There are three heaters in the cryostat that can provide heat input into the liquid argon. Two of the heaters are 250 W, and the third heater is 1500 W. If operated together, they could provide 2000 W of heat into the liquid argon. This is nine times less than the 18282 W considered for the fire condition. Thus the cryostat is adequately relieved when vapor generation from its internal electrical heats is considered.

Vapor Generation Due to the Materials Lock

The cryostat has a unique feature that will allow the insertion of room temperature materials into the liquid argon. Figure 4 details this feature referred to as the materials lock. The room temperature sample will be placed into a basket that resides in an 8 inch conflat cross. While in the cross, the basket is separated from the cryostat argon vapor space by a gate valve. The cross can either be purged with argon or evacuated before the gate valve is opened. This prevents the transfer of atmospheric contamination into the ultra-pure liquid argon in the cryostat. To lower a sample into the cryostat, the gate valve is opened and a rod attached to the top of the basket moves the basket downward. The rod is moved vertically by a screw and stepper motor combination. The basket is dropped onto a platform that is attached to a second screw and stepper motor combination. The rod then retracts and the gate valve is closed. As the platform lowers the sample into the liquid, both the sample and material basket will generate vapor. Typically the platform would be lowered at a rate that limits the vapor generation to a rate that can be matched by the nitrogen heat exchanger so the the argon space is closed. If the nitrogen heat exchanger is overpowered, then excess vapor is vented thru a pneumatic valve (EP-205-Ar). PSV-313-Ar set at 6 psig will vent the material lock if the gate valve is open. As a last resort, the excess vapor will vent thru the cryostat relief valve (PSV-210-Ar). Thus a limit must be imposed on the size of test samples so that the relief valve cannot be over powered.

A paper entitled "Nucleate Boiling of Nitrogen, Argon, and Carbon Monoxoide From Atmospheric to Near the Critical Pressure" by C. Johler and E. L. Park published in Advances in Cryogenic Engineering Volume 15 contains experimental critical heat flux data for liquid argon. From the paper it appears that the critical heat flux for argon does not exceed 100 W / $in^2$. The critical heat flux value for liquid argon is an upper limit for heat input into the liquid.

The material basket was fabricated from sixteen 1/8 inch diameter 304 SS rods, each with a length of 16.5 inches. The surface area of these rods is then $\pi$ x 0.125 x 16.5 x 16 = 103.7 $in^2$. The volume of the rods is ($\pi$ / 4) x $0.125^2$ x 16.5 x 16 = 3.240 $in^3$.

A conical strip of metal at the bottom of the basket has a surface area estimated as $\pi$ x 4.9 x 0.75 x 2 = 23.1 $in^2$ (this includes both sides of the strip). The volume of the strip is estimated as ($\pi$ / 4) x ($4.9^2 - 4.7125^2$) x 0.1 = 0.142 $in^3$.

The surface area of the cylinder at the top of the basket is $\pi$ x 1 x 1 + ($\pi$ / 4) x $1^2$ x 2 = 4.71 $in^2$. Its volume is estimated as ($\pi$ / 4) x $1^2$ x 1 = 0.785 $in^3$.

The small disk at the bottom of the basket has a surface area of ($\pi$ / 4) x $1.5^2$ x 2 = 3.53 $in^2$ (including both sides). Its volume is ($\pi$ / 4) x $1.5^2$ x 0.1 = 0.177 $in^3$.

The surface area of the horizontal strips that make up the door are estimated as ($\pi$ / 4) x ($5.5^2 - 5.25^2$) x 2 x 2 + $\pi$ x 5.5 x 0.125 x 2 + $\pi$ x 5.25 x 0.125 x 2 = 16.89 $in^2$. The strips have an approximate volume of ($\pi$ / 4) x ($5.5^2 - 5.25^2$) x 0.125 x 2 = 0.528 $in^3$.

The platform the basket rests on has a surface area of ($\pi$ / 4) x ($8^2 - 4.5^2$) x 2 + $\pi$ x 8 x 0.375 + $\pi$ x 4.5 x 0.375 = 83.4 $in^2$. The estimated volume of the platform is ($\pi$ / 4) x ($8^2 - 4.5^2$) x 0.375 = 12.885 $in^3$.

The 3 bearings and drive mechanism that ride with the platform have a surface area estimated as ($\pi$ / 4) x ($2.16^2 - 0.5^2$) x 2 x 4 + $\pi$ x 2.16 x 1 x 4 = 54.9 $in^2$. The volume of these components is ($\pi$ / 4) x ($2.16^2 - 0.5^2$) x 1 x 4 = 13.872 $in^3$.

Thus the total surface area is 290.2 $in^2$. The total volume of the components that can move in and out of the liquid is 31.629 $in^3$ of SS 304.

The density of SS 304 is 0.28 lb / $in^3$. The amount of stainless steel contained in the moving parts is then 31.629 $in^3$ x 0.28 lb / $in^3$ = 8.86 lb. SS 304 cooled from 300 K to 87 K rejects about 37,143 J / lb. Thus the moving parts will input 8.86 lb x 37143 J / lb = 329,087 J into the liquid argon.

The latent heat of argon is about 73,420 J / lb. Thus 329,087 J / 73,420 J / lb = 4.48 lb of saturated vapor produced by the warm components entering the liquid. At the 35 psig MAWP of the vessel, the density of vapor is 1.11 lb / $ft^3$. The volume of vapor produced at MAWP is then 4.48 lb / 1.11 lb / $ft^3$ = 4.04 $ft^3$ or 114.4 liters. In a 250 liter vessel with little vapor space, this heat input can significantly increase the vapor pressure and must be relieved. If the parts could sustain critical heat flux, it would take

$$\frac{329{,}087J}{1} \times \frac{1}{290.2in^2} \times \frac{in^2}{100W} \times \frac{1W}{\frac{1J}{1S}} = 11.34\,\text{sec}$$

to produce the vapor.

The capacity of the relief valve PSV-210-Ar for cold argon vapor can be calculated in the following manner

$$W = \frac{ACKP_1\sqrt{M}}{\sqrt{TZ}} \text{ where}$$

*A* = orifice area of relief valve, 0.307 $in^2$.

*W* = maximum capacity, lb / hr

*M* = molecular weight of gas, 40 for argon

*T* = relief temperature, 183.57 $^oR$ for saturated argon vapor venting at 54.7 psia (110% MAWP)

*Z* = compressibility factor, 1.0

*C* = gas constant based on ratio of specific heats, 378 for argon

*K* = nozzle coefficient, 0.816 (derived from manufacturer testing)

$P_1$ = inlet flowing pressure, psia = 1.10 x (35 + 15) -15 + 14.7 = 54.7 psia

The capacity of the relief valve when venting cold vapor is found to be

$$W = \frac{0.307 \cdot 378 \cdot 0.816 \cdot 54.7\sqrt{40}}{\sqrt{183.57 \cdot 1.0}} = 2418\frac{lb}{hr}.$$

The latent heat of saturated liquid argon at the relieving pressure of 54.7 psia is 63.88 Btu / lbm. The mass flow rate is multiplied by the latent heat and converted to Watts as follows

$$2418\frac{lb}{hr} \times 63.88\frac{Btu}{lb} \times \frac{1055.06J}{Btu} \times \frac{1hr}{3600\sec} = 45269\ Watts.$$

Thus the maximum heat input into the cryostat that can be relieved as cold vapor is 45,269 W. 45,269 W divided by the 100 W per square inch critical heat flux yields 452.7 square inches of surface area. The material basket, the platform it rides on, and the associated hardware that moves in and out of the liquid has a surface area of 290.2 in$^2$. Thus material samples with a surface area of less then 452.7 – 286.7 = 162.5 square inches cannot overwhelm the relief valve. A procedure will be developed for material insertion. The procedure will require the signature of two people who state that they have measured the surface area of the material and that it is less then 162.5 in$^2$. In the future a material basket with less surface area may be constructed. However, the total surface area of 452.7 square inches for the combined material basket and test sample will not be exceeded.

Filling of the Cryostat

The cryostat is filled from FNAL stock room high pressure liquid argon dewars. The reliefs on these 160 liter dewars are set at 350 psig. The flow path from the argon dewars to the cryostat has several restrictions such as valves and filters. Normal filling operation involves cooling down the transfer line by venting the argon just before the cryostat. Once liquid appears at the vent, the flow is then directed into the cryostat. To simplify the calculations, it is assumed that liquid at 350 psig exits the stockroom dewars and enters the cryostat at 35 psig. Once in the warm cryostat the liquid is assumed to completely vaporize and exit as room temperature gas. This is a very conservative calculation because the flashing due to the reduction in pressure from 350 psig to 35 psig will result in a large amount of vapor generation. The amount of vapor generated during this constant enthalpy pressure reduction can be calculated as

$$x = \frac{m_{vapor}}{m_{liquid} + m_{vapor}} = \frac{h_{350\,psig\ saturated\ liquid} - h_{35\,psig\ saturated\ liquid}}{h_{35\,psig\ saturated\ gas} - h_{35\,psig\ saturated\ liquid}} = \frac{-211.8 - (-257.4)}{-107.6 - (-257.4)} = 0.304$$

where the enthalpies are in kJ/kg. Thus, ignoring any heat input into the transfer line, the vapor will be 30% of the total mass flow. The area occupied by the vapor is therefore substantial and will lead to the actual mass flow rate being much smaller than the calculated liquid only flow rate.

Figure 4.1a.3 describes the flow resistance of the valves, fittings, and tubing in the transfer line. The flow resistance offered by the orifice and filters is described below. All equations were solved in the EES simultaneous equation solver which computed the mass flow rate based upon the sum of the resistances and the known inlet and outlet pressures. The pressure drop is divided into two parts. The 1$^{st}$ part is the pressure drop across the orifice at the beginning of the transfer line. The 2$^{nd}$ part of the pressure drop corresponds to the loss across the sum of the flow resistances in the transfer line.

The pressure drop across the orifice is calculated from Crane equation 3-19

$$W = 1891 d_{orifice}^2 C\sqrt{(P_1 - P_2)\rho_{LAr}}$$

where

*W* = the mass flow rate thru the transfer line in lb/hr, calculated as 1436.6 lb / hr.

$d_{orifice}$ = diameter of the orifice, selected to be 0.122 in.

*C* = flow coefficient for orifices and nozzles corrected for velocity of approach, 0.61 based on page A-20 of Crane and Reynolds number. The Reynolds number was calculated from $\mathrm{Re} = 6.31\frac{W}{d_1\mu}$ where μ = the absolute viscosity of liquid argon at the orifice inlet condition, 0.07513 centipoise. $\mathrm{Re} = 6.31\frac{1436.6}{0.305 \cdot .07513} = 395596$

$\rho_{LAr}$ = density of saturated liquid argon at orifice inlet pressure, 63.39 lb / ft$^3$

$P_1$ = orifice inlet pressure, 364.7 psia.

$P_2$ = orifice outlet pressure, calculated as 254.9 psia

There are two filters in the system that create flow resistance. One filter is a molecular sieve while the other filter is an oxygen filter. The filter materials are loaded into identical housings. To calculate an equivalent flow resistance for each filter, the pressure drop equation for each filter was set equal to the pressure drop equation for discharge of fluid thru pipe. The filter pressure drop equation is taken from Union Carbide Molecular Sieve Literature which is available in the appendix. The pipe pressure drop equation used to calculate resistance coefficients ($K_{filter}$) for each filter is Crane 410 equation 3-19.

$$\Delta P_{filter} = \frac{f_T C_t G^2 L}{\rho_{filter} D_p} = \Delta P_{pipe} = \left(\frac{W}{1891 d_1^2}\right)^2 \frac{K_{filter}}{\rho_{filter}} \Rightarrow K_{filter} = \frac{f_T C_t G^2 L}{\rho_{filter} D_p} \frac{\rho_{filter}}{\left(\frac{W}{1891 d_1^2}\right)^2},$$

where

$f_T$ = friction factor determined from the modified Reynolds's number of $\mathrm{Re}_{\mathrm{mod}} = \frac{D_p G}{\mu_{filter}}$ and plot in the Union Carbide literature .

$C_t$ = pressure drop coefficient determined from plot in Union Carbide literature for external void fraction of 0.37, 3.6 x $10^{-10}$.

*G* = superficial mass velocity, $G = \frac{W}{A_{filter}} = \frac{1436.6\frac{lb}{hr}}{0.0261 ft^2} = 55042\frac{lb}{hr \cdot ft^2}$

$A_{filter}$ = cross-sectional area of the filter, 0.0261 ft$^2$ (2.1875 in. ID).

$\mu_{filter}$ = liquid argon viscosity, 0.2894 lb/(ft*hr) (saturated liquid at 152.3 psia)

$D_p$ = effective particle diameter of filter material, Dp = 0.003693 ft for oxygen, Dp = 0.00666 f. for molecular sieve.

*L* = length of filter bed, 2.33 ft.

$\rho_{filter}$ = density liquid argon, 73.94 lb / ft$^3$ (saturated liquid argon at 152.3 psia)

$K_{filter}$ = resistance coefficient for filter

The modified Reynolds number for each filter is

$$\mathrm{Re}_{\mathrm{mod},oxygen} = \frac{(.003693\,ft)}{0.2894\,\frac{lb}{ft\cdot hr}}\frac{55042\,lb}{hr\cdot ft^2} = 702.3,\ \mathrm{Re}_{\mathrm{mod},molecular\ sieve} = \frac{(.00666\,ft)}{0.2894\,\frac{lb}{ft\cdot hr}}\frac{55042\,lb}{hr\cdot ft^2} = 1267.$$

Based on the modified Reynolds numbers, $f_T$ is about 1.0 for both filters. The equivalent resistance coefficients are then computed as follows

$$K_{filter,oxygen} = \frac{1.0\left(3.6x10^{-10}\right)55042^2(2.33)}{73.94(.003693)}\frac{73.94}{\left(\frac{1436.3}{1891(0.305)^2}\right)^2} = 10.32,\ K_{filter,molecular\ sieve} = \frac{1.0\left(3.6x10^{-10}\right)55042^2(2.33)}{73.94(.00666)}\frac{73.94}{\left(\frac{1436.3}{1891(0.305)^2}\right)^2} = 5.72.$$

The total resistance of the flow path from the point immediately downstream of the orifice to the liquid discharge point in the cryostat is then $K_{total} = K_{elbows} + K_{tees} + K_{pipe} + K_{enlarge} + K_{contract} + K_{exit} + K_{bends} + K_{valves} + K_{oxygen} + K_{molecular\ sieve}$ = 7.68 + 2.56 + 49.73 + 1.92 + 0.98 +1.0 + 12.02 + 135.5 + 10.32 + 5.72 = 227.4.

The pressure drop due to the various components of the transfer line was found using Crane equation 3-19

$$W = 1891 d_1^2\sqrt{\frac{(P_2 - P_3)\rho_{filter}}{K_{total}}} = 1891(0.305)^2\sqrt{\frac{(254.9 - 49.7)73.94}{227.4}} = 1437\frac{lb}{hr}.$$

Thus the total mass flow rate into the cryostat from a 350 psig argon source is 1437 lb/hr. This is a very conservative upper limit because 30% of the mass flow will be vapor which will greatly reduce the total mass flow rate. Added to this already conservative calculation is the assumption that the vapor generated by the liquid vaporized by a warm cryostat vents thru the relief valve at room temperature.

Anderson Greenwood provides the following sizing formula to determine the required orifice area A when the vapor mass flow rate is known:

$$A = \frac{W\sqrt{TZ}}{CKP_1\sqrt{M}}$$ where

*A* = required orifice area, in$^2$.

*W* = required capacity, 1437 lb/hr (maximum liquid flow rate thru transfer line)

*M* = molecular weight of gas, 40 for argon

*T* = relief temperature, 520 $^o$R for air at standard conditions.

*Z* = compressibility factor, 1.0

*C* = gas constant based on ratio of specific heats, 378 for argon

*K* = nozzle coefficient, 0.816 (derived from manufacturer testing)

$P_1$ = inlet flowing pressure, psia = 1.10 x (35 + 15) -15 + 14.7 = 54.7 psia

The required orifice area is therefore $A = \frac{1437\sqrt{520 \cdot 1.0}}{378 \cdot 0.816 \cdot 54.7\sqrt{40}} = 0.307\ in^2$.

The "F" size Anderson Greenwood relief has an orifice of 0.307 in$^2$ which is equal to the required 0.307 in$^2$ and thus the relief valve is adequate for the filling condition described by this very conservative calculation.

If the cryostat is full of liquid and liquid is forced out the relief valve, then Anderson Greenwood recommends the following sizing formula for determining liquid capacity.

$A = \frac{V_L\sqrt{G}}{38KK_PK_WK_V\sqrt{P_A - P_B}}$ where

*A* = required orifice area, in$^2$.

*K* = nozzle coefficient, 0.816 (derived from manufacturer testing).

$P_A$ = inlet flowing pressure, psig = 1.10 x (35 + 15) -15 = 40 psig.

$P_b$ = back pressure, 0 psig.

$V_L$ = required capacity, GPM. Density of saturated liquid argon at inlet pressure of 40 psig is 81.18 lb / ft$^3$.
Converting units yields $1437\frac{lb}{hr} \times \frac{ft^3}{81.18\ lb} \times \frac{1hr}{60\min} \times \frac{7.48052gal}{ft^3} = 2.20\frac{gal}{\min}$.

*G* = Specific gravity, $G = \frac{\rho_{LAr}}{\rho_{H2O}} = \frac{81.18\frac{lb}{ft^3}}{62.38\frac{lb}{ft^3}} = 1.30$.

$K_W$ = back pressure correction factor, 1.0.

$K_V$ = viscosity correction factor, based on plot from AgCo literature and Reynolds number R.
$R = \frac{V_L(2800G)}{\mu\sqrt{A}}$ where μ = 0.1757 cp for liquid argon saturated at 40 psig and A = 0.307 in$^2$ for the relief valve orifice area. Thus $R = \frac{2.2(2800 \cdot 1.30)}{0.1757\sqrt{0.307}} = 82259$ and from plot $K_V$ = 1.0

$K_p$ = overpressure correction factor, 1.0.

The required orifice area for relieving liquid from the cryostat during filling is then
$A = \frac{2.2\sqrt{1.30}}{38(0.816)1.0(1.0)1.0\sqrt{40-0}} = 0.0128\ in^2$ and the selected relief valve orifice area is adequate.

Introduction of Gas Contamination into Cryostat

As part of the contamination study program, gas phase impurities will be introduced into the cryostat. Typically, certified bottles of gas will be purchased from vendors such as 100 ppm nitrogen in argon. A sample bottle of known size will be pressurized to a known pressure and then the gas will be introduced into the cryostat. Two high purity bottle regulators have been purchased for this application. One is a Parker Veriflow 735 bottle regulator with a $C_v$ of 0.04. The other is a Matheson 9460 series with a $C_v$ of 0.05.

For room temperature argon gas with a small amount of contamination, the flow capacity of the relief valve is computed using the equation supplied by Anderson Greenwood:

$$V = \frac{6.32ACKP1}{\sqrt{MTZ}}$$ where

*A* = orifice area, 0.307 $in^2$.

*V* = relief valve capacity, SCFM argon

*M* = molecular weight of gas, 40 for argon

*T* = relief temperature, 520 $^oR$ for argon at standard conditions.

*Z* = compressibility factor, 1.0

*C* = gas constant based on ratio of specific heats, 378 for argon

*K* = nozzle coefficient, 0.816 (derived from manufacturer testing)

$P_1$ = inlet flowing pressure, psia = 1.10 x (35 + 15) -15 + 14.7 = 54.7 psia

$$V = \frac{6.32(0.307)378(0.816)54.7}{\sqrt{40 \cdot 520 \cdot 1.0}} = 227 \text{ SCFM argon}$$

The maximum flow from the regulator with the larger $C_v$ is computed using the equation recommended by Swagelock for high pressure drop flow:

$$q = 0.471 N_2 C_v p_1 \sqrt{\frac{1}{G_g T_1}}$$ where

$N_2$ = constant with value of 22.67 for units of psia, $^oR$, and SCFM

$C_v$ = flow coefficient, 0.05.

$P_1$ = regulator inlet pressure, 3000 psia

$G_g$ = gas specific gravity, 1.38 for argon

$T_1$ = gas temperature, 520 $^oR$

$q = 0.471(22.67)0.05(3000)\sqrt{\frac{1}{(1.38)520}} = 59.8 \text{ SCFM argon}$. Thus the cryostat relief valve capacity of 227 SCFM argon is nearly 4 times that of the high purity regulator capacity of 59.8 SCFM argon.

As a side note, the inert gas regulator available in the FNAL stock room, the Victor VTS450B, has a maximum flow rate of 1750 SCFH air which is 29.2 SCFM. This air flow rate, converted to argon using the method found in ASME mandatory Appendix 11, is equivalent to 36.4 SCFM argon. Thus the cryostat cannot be over pressurized using a typical stockroom bottle regulator.

RD-302-Ar

RD-302-Ar is the rupture disk attached to Luke and its set point is 55 psig. ASME coded relief valve PSV-210-Ar has capacity for all relief scenarios. RD-302-Ar is not an ASME coded rupture disc because of purity concerns. Fully welded rupture discs cannot be ASME coded. A rupture disc holder has an o-ring seal that will allow oxygen diffusion into the ultra pure argon. RD-302-Ar has a 10% burst tolerance such that the burst pressure range is 49.5 to 55 psig. The capacity of RD-320-Ar is calculated per ASME Section VIII

$W = K_D CAP\sqrt{\frac{M}{TZ}}$ where

*W* = rated flow capacity, lb/hr.

$K_d$ = coefficient of discharge (0.62 for rupture disc devices).

*C* = constant based on the ratio of specific heats, 378 for argon.

*A* = minimum net flow area, rupture disc size is for 1.5 inch pipe but will use ID of 1.5 inch tube that rupture disc is mounted on to be conservative. $A = \left(\frac{\pi}{4}\right)1.37^2 = 1.47 in^2$.

*P* = inlet pressure, 69.7 psia.

*M* = Molecular weight, 40 for argon.

*T* = absolute temperature, 530 R.

*Z* = compressibility factor, use 1.0 to be conservative.

The rupture disc capacity is then

$$W = (0.62)378(1.47)69.7\sqrt{\frac{40}{530(1.0)}} = 6615\frac{lb}{hr}$$

which converts to SCFM argon as

$$6615\frac{lb}{hr} \times \frac{1hr}{60\min} \times \frac{ft^3}{0.1034lb} = 1066\frac{ft^3}{\min}.$$

## Vent Pressure Drop for PSV-210-Ar

Previously in this document, the maximum capacity of PSV-210-Ar was found to be 227 SCFM argon. PSV-210-Ar vents outside PAB thru a tube with a 2 inch internal diameter. It is assumed that the inlet pressure of the vent pipe is the pressure rise above atmospheric pressure required for 227 SCFM of argon to flow thru the vent.

It is unlikely the system can supply 227 SCFM of warm argon gas. The filling calculation that matches the relief valve capacity of 227 SCFM argon ignores the mass flow reduction due to vapor generation so it is very conservative.

The vent pipng run has a length of 18 feet with two elbows one tee. Crane 410 offers the following equation identified as 3-20 for the discharge of fluid thru valves, fittings, and pipe for compressible flow:

$q_m^{'} = 412\frac{Yd^2}{S_g}\sqrt{\frac{\Delta P \rho_1}{K}}$ which can be re-arranged as $\Delta P = \left(\frac{q_m^{'} S_g}{412 Y d^2}\right)^2 \frac{K}{\rho_1}$ where

$q_m^{'}$ = 227 SCFM, rate of argon flow in cubic feet per minute at std. conditions (14.7 psia and 60 F)

*Y* = 0.97, net expansion factor for compressible flow thru orifices, nozzles, or pipe. Estimated using charts on page A-22 in Crane 410.

*d* = 2.0 inches, internal diameter of vent piping.

$S_g$ = 1.379, specific gravity of argon relative to air = the ratio of the molecular weight of argon to that of air (39.95/28.97).

$\Delta P$ = psi, pressure drop thru vent piping.

$\rho_1$ = 0.1142 lb/ft$^3$, density of argon at inlet of vent tubing.

*K* = $K_{elbows}$ + $K_{tee}$ + $K_{pipe}$ + $K_{exit}$, resistance coefficient for flow thru the exhaust piping which consists of 2 elbows, 1 tee, straight pipe, and the resistance due to the pipe exit.

$f_T$ = 0.019, friction factor in zone of complete turbulence for 2 inch internal diameter pipe.

$K_{elbows}$ = 2 x 30 x $f_T$ = 2 x 30 x 0.019 = 1.14.

$K_{tee}$ = 20 x $f_T$ = 20 x 0.019 = 0.38.

The Reynolds number is calculated from

$\mathrm{Re} = \frac{0.482 q_h^{'} S_g}{d\mu}$ where

$q_h'$ = 13,620 SCFH, rate of flow, in cubic feet per hour at standard conditions (14.7 psia and 60 F).

$\mu$ = 0.02211 centipoise, dynamic viscosity of argon.

The Reynolds number is then $\mathrm{Re} = \frac{0.482(13620)1.379}{(2)0.02211} = 204724$.

*f* = 0.021, friction factor estimated from Reynolds number and plot on page A-25 of Crane 410.

*L* = 216 inches, length of pipe.

$K_{pipe}$ = $f\frac{L}{d} = 0.021\frac{216}{2} = 2.268$, resistance due to straight pipe.

$K_{exit}$ = 1.0, resistance of the pipe exit.

Thus the total resistance is *K* = 1.14 + 0.38 + 2.268 + 1.0 = 4.788.

The pressure drop for 227 SCFM of argon thru the vent piping is then

$\Delta P = \left(\frac{227(1.379)}{412(0.97)2^2}\right)^2 \frac{4.788}{0.1167} = 1.573$ psi which is a negligible fraction of the available pressure.

**CVI-138-V**

This vacuum pumpout provides the vacuum relief for "Luke." Its spring has been removed to lower the relief pressure. The groove for the retaining clip has been filled with epoxy to prevent a spring from being re-installed. Thus it is basically a small parallel plate relief held shut by the vacuum pressure differential. This CVI model V-1046-31 vacuum pumpout port has a throat area of 1.23 $in^2$. According to the CGA, the area of a vacuum relief in sq. in. should be 0.00024 x wc where wc is the water capacity in pounds of the vessel. The water capacity of the vessel is about 66 gallons based on its 250 liter volume. The density of water is about 8.34 lb/gal. Thus the required relief area is 0.00024 x 66 x 8.34 = 0.132 $in^2$. Since the CVI throat area is much larger than the required relief area, the cryostat is adequately relieved.

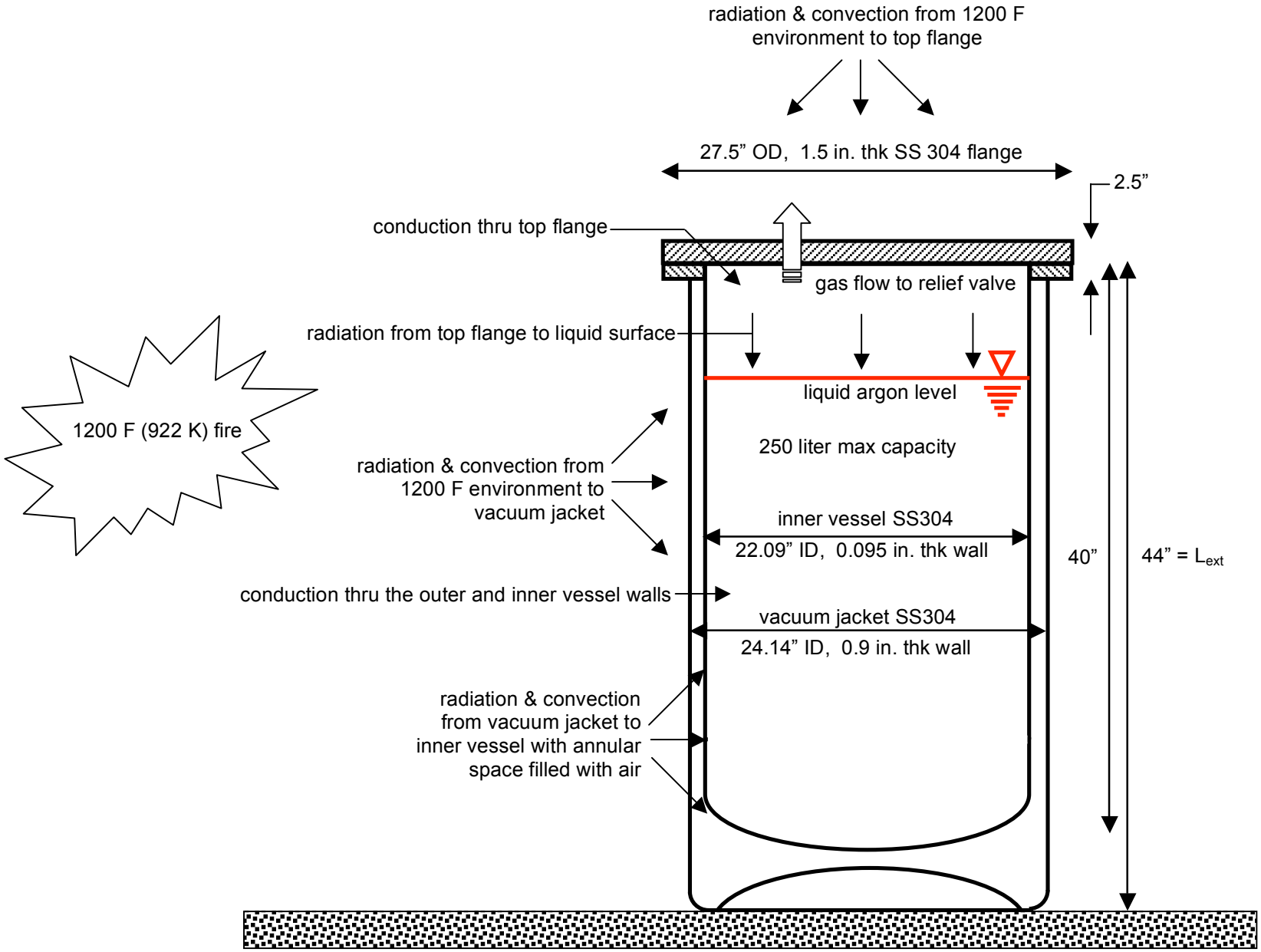


External surface area = $\pi \times 24.31 \times 44 + \pi \times 27.5 \times 2.5 + \pi / 4 \times 27.5^2 + \pi / 4 \times (27.5^2 - 24.31^2) = 4300\ in^2 = 29.86\ ft^2 = 2.777\ m^2$

Internal surface area = $\pi \times 22.09 \times 40 + \pi / 4 \times 22.09^2 = 3159\ in^2 = 21.94\ ft^2 = 2.038\ m^2$

Average surface area = $3729\ in^2 = 25.90\ ft^2 = 2.408\ m^2$

Figure 4.1a.1: Dimensions and capacities of the Materials Test Station Cryostat

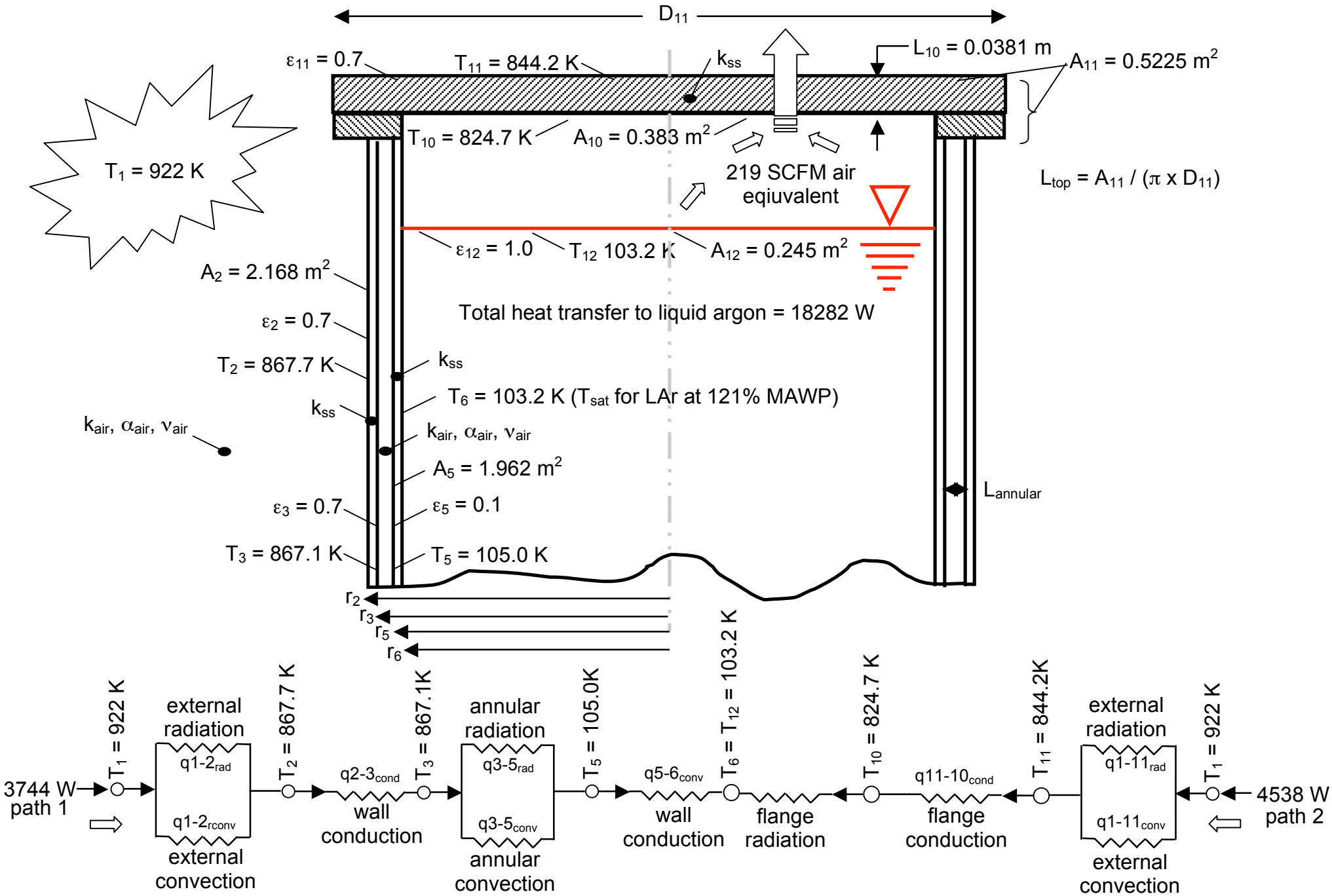


Figure 4.1a.2: Heat transfer mechanisms

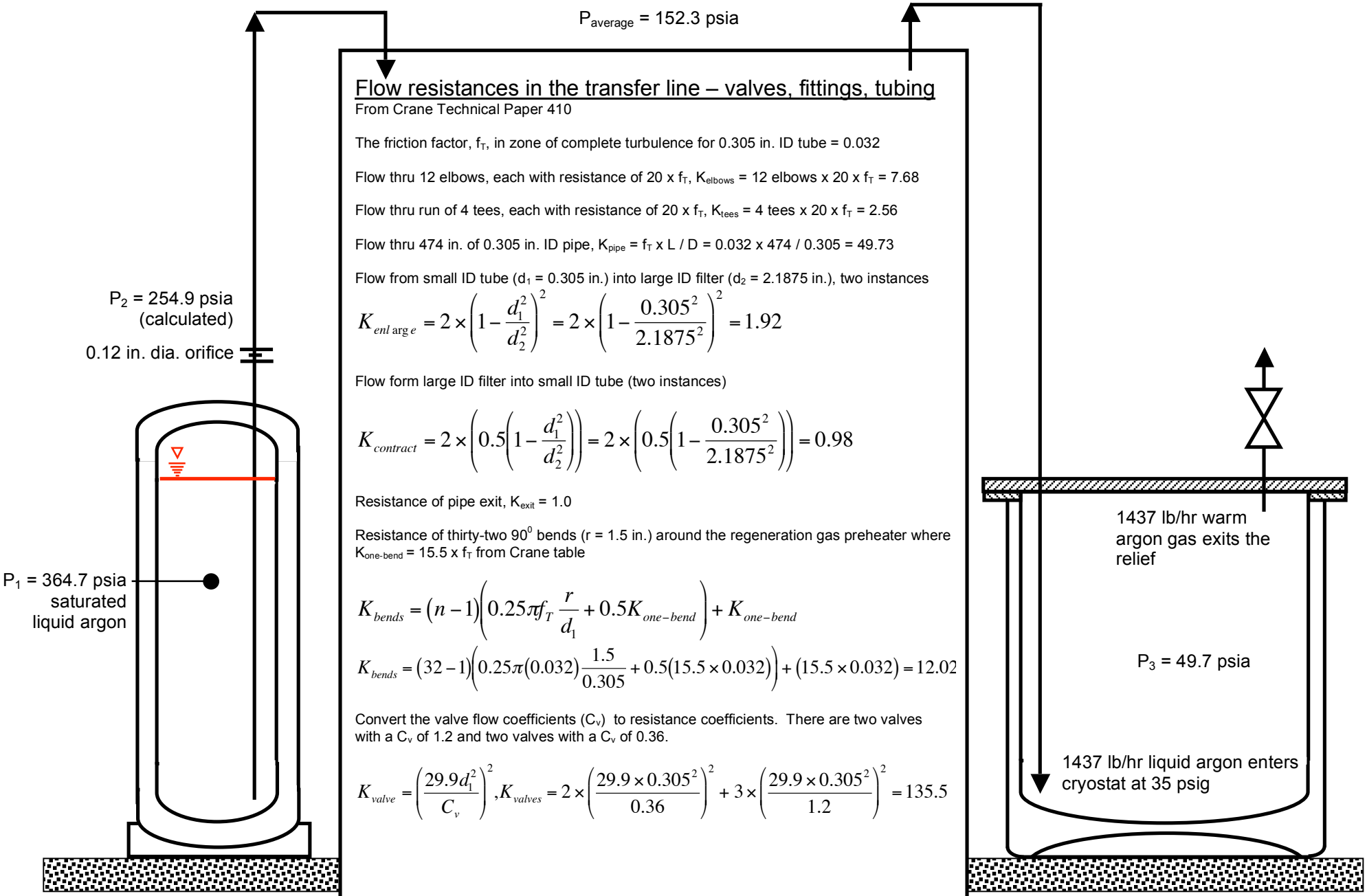


## Flow resistances in the transfer line – valves, fittings, tubing

From Crane Technical Paper 410

The friction factor, $f_T$, in zone of complete turbulence for 0.305 in. ID tube = 0.032

Flow thru 12 elbows, each with resistance of 20 x $f_T$, $K_{elbows}$ = 12 elbows x 20 x $f_T$ = 7.68

Flow thru run of 4 tees, each with resistance of 20 x $f_T$, $K_{tees}$ = 4 tees x 20 x $f_T$ = 2.56

Flow thru 474 in. of 0.305 in. ID pipe, $K_{pipe} = f_T \times L / D$ = 0.032 x 474 / 0.305 = 49.73

Flow from small ID tube ($d_1$ = 0.305 in.) into large ID filter ($d_2$ = 2.1875 in.), two instances

$$K_{enlarge} = 2 \times \left(1 - \frac{d_1^2}{d_2^2}\right)^2 = 2 \times \left(1 - \frac{0.305^2}{2.1875^2}\right)^2 = 1.92$$

Flow form large ID filter into small ID tube (two instances)

$$K_{contract} = 2 \times \left(0.5\left(1 - \frac{d_1^2}{d_2^2}\right)\right) = 2 \times \left(0.5\left(1 - \frac{0.305^2}{2.1875^2}\right)\right) = 0.98$$

Resistance of pipe exit, $K_{exit}$ = 1.0

Resistance of thirty-two $90^0$ bends (r = 1.5 in.) around the regeneration gas preheater where $K_{one\text{-}bend} = 15.5 \times f_T$ from Crane table

$$K_{bends} = (n-1)\left(0.25\pi f_T \frac{r}{d_1} + 0.5K_{one-bend}\right) + K_{one-bend}$$

$$K_{bends} = (32-1)\left(0.25\pi(0.032)\frac{1.5}{0.305} + 0.5(15.5 \times 0.032)\right) + (15.5 \times 0.032) = 12.02$$

Convert the valve flow coefficients ($C_v$) to resistance coefficients. There are two valves with a $C_v$ of 1.2 and two valves with a $C_v$ of 0.36.

$$K_{valve} = \left(\frac{29.9 d_1^2}{C_v}\right)^2, K_{valves} = 2 \times \left(\frac{29.9 \times 0.305^2}{0.36}\right)^2 + 3 \times \left(\frac{29.9 \times 0.305^2}{1.2}\right)^2 = 135.5$$

Figure 4.1a.3: Filling of cryostat

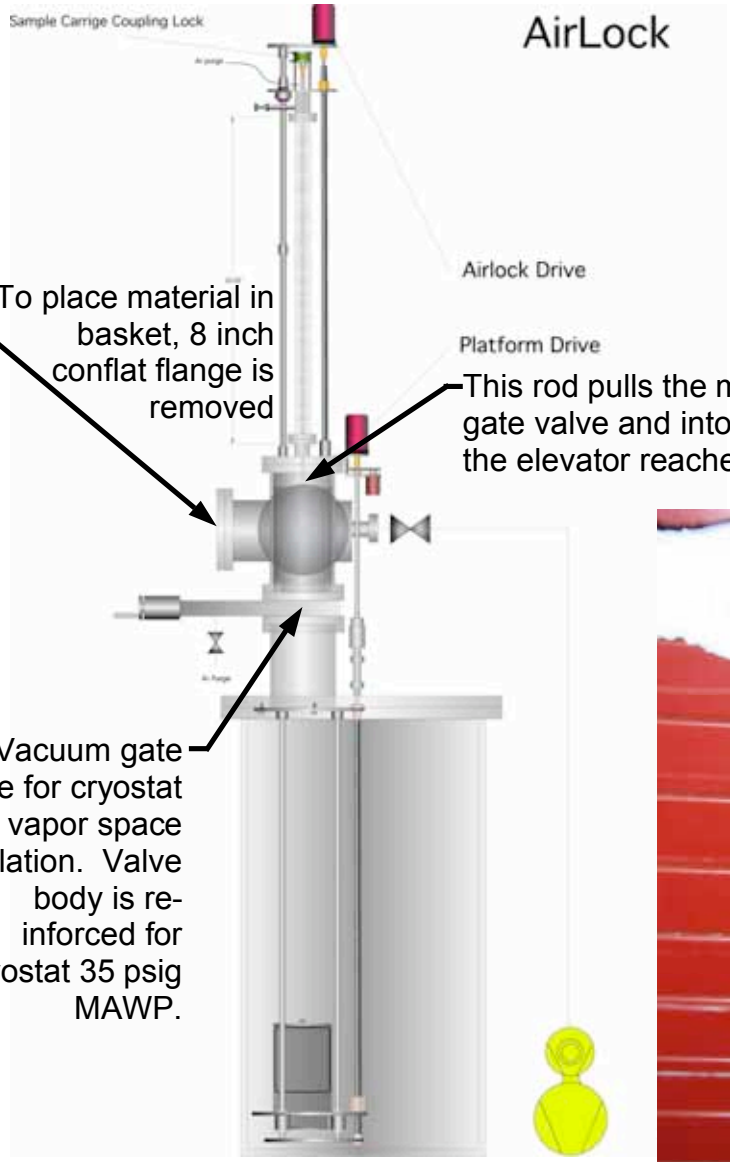


To place material in basket, 8 inch conflat flange is removed

This rod pulls the material basket thru the gate valve and into 8 inch conflat cross once the elevator reaches its maximum height.

Vacuum gate valve for cryostat vapor space isolation. Valve body is re-inforced for cryostat 35 psig MAWP.

Material basket rides on this platform whose motion is controlled by a threaded rod driven by a stepper motor.

Figure 4.1a.4: Material lock details.

# 4.1aa – Supporting Documentation for Relief Valve Calculations

**TABLE 13.3 Special Diffuse, Gray, Two-Surface Enclosures**

**Large (Infinite) Parallel Planes**

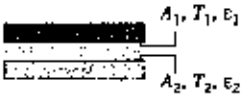


$$A_1 = A_2 = A \qquad F_{12} = 1 \qquad q_{12} = \frac{A\sigma(T_1^4 - T_2^4)}{\dfrac{1}{\varepsilon_1} + \dfrac{1}{\varepsilon_2} - 1} \tag{13.24}$$

**Long (Infinite) Concentric Cylinders**

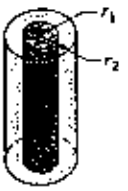


$$\frac{A_1}{A_2} = \frac{r_1}{r_2} \qquad F_{12} = 1 \qquad q_{12} = \frac{\sigma A_1(T_1^4 - T_2^4)}{\dfrac{1}{\varepsilon_1} + \dfrac{1 - \varepsilon_2}{\varepsilon_2}\left(\dfrac{r_1}{r_2}\right)} \tag{13.25}$$

**Concentric Spheres**

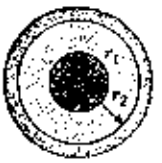


$$\frac{A_1}{A_2} = \frac{r_1^2}{r_2^2} \qquad F_{12} = 1 \qquad q_{12} = \frac{\sigma A_1(T_1^4 - T_2^4)}{\dfrac{1}{\varepsilon_1} + \dfrac{1 - \varepsilon_2}{\varepsilon_2}\left(\dfrac{r_1}{r_2}\right)^2} \tag{13.26}$$

**Small Convex Object in a Large Cavity**

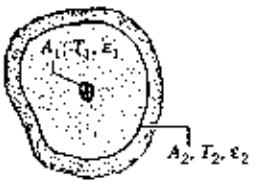


$$\frac{A_1}{A_2} \approx 0 \qquad F_{12} = 1 \qquad q_{12} = \sigma A_1 \varepsilon_1 (T_1^4 - T_2^4) \tag{13.27}$$

tween surfaces 1 and 2 is given by Equation 13.24. However, with the radiation shield, additional resistances are present, as shown in Figure 13.12*b*, and the heat transfer rate is reduced. Note that the emissivity associated with one side of the shield ($\varepsilon_{3,1}$) may differ from that associated with the opposite side ($\varepsilon_{3,2}$) and the radiosities will always differ. Summing the resistances and recognizing that $F_{13} = F_{32} = 1$, it follows that

$$q_{12} = \frac{A_1\sigma(T_1^4 - T_2^4)}{\dfrac{1}{\varepsilon_1} + \dfrac{1}{\varepsilon_2} + \dfrac{1 - \varepsilon_{3,1}}{\varepsilon_{3,1}} + \dfrac{1 - \varepsilon_{3,2}}{\varepsilon_{3,2}}} \tag{13.28}$$

Note that the resistances associated with the radiation shield become very large when the emissivities $\varepsilon_{3,1}$ and $\varepsilon_{3,2}$ are very small.

Equation 13.28 may be used to determine the net heat transfer rate if $T_1$ and $T_2$ are known. From knowledge of $q_{12}$ and the fact that $q_{12} = q_{13} = q_{32}$, the value of $T_3$ may then be determined by expressing Equation 13.24 for $q_{13}$ or $q_{32}$.

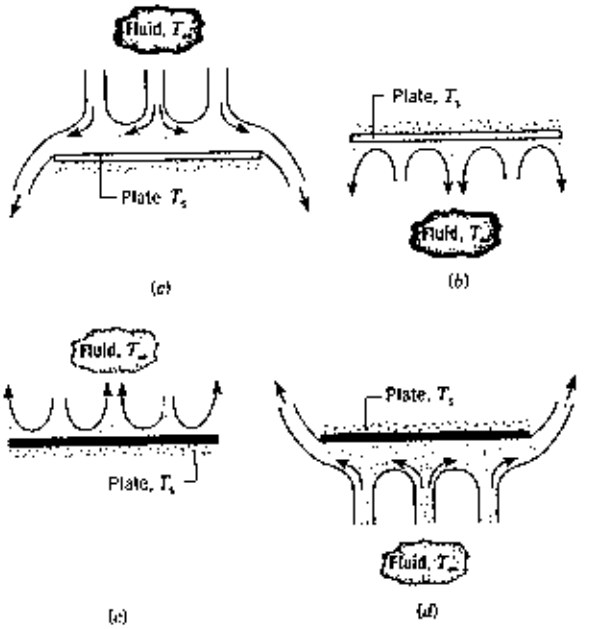


**FIGURE 9.8** Buoyancy-driven flows on horizontal cold ($T_s < T_\infty$) and hot ($T_s > T_\infty$) plates: (*a*) top surface of cold plate, (*b*) bottom surface of cold plate, (*c*) top surface of hot plate, and (*d*) bottom surface of hot plate.

surface facing downward (Figure 9.8*d*), the tendency of the fluid to descend and ascend, respectively, is impeded by the plate. The flow must move horizontally before it can descend or ascend from the edges of the plate, and convection heat transfer is somewhat ineffective. In contrast, for a cold surface facing downward (Figure 9.8*b*) and a hot surface facing upward (Figure 9.8*c*), flow is driven by descending and ascending parcels of fluid, respectively. Conservation of mass dictates that cold (warm) fluid descending (ascending) from a surface be replaced by ascending (descending) warmer (cooler) fluid from the ambient, and heat transfer is much more effective.

Although correlations suggested by McAdams [5] are widely used for horizontal plates, improved accuracy may be obtained by altering the form of the characteristic length on which the correlations are based [18, 19]. In particular with the characteristic length defined as

$$L \equiv \frac{A_s}{P} \tag{9.29}$$

where $A_s$ and $P$ are the plate surface area and perimeter, respectively, recommended correlations for the average Nusselt number are

**Upper Surface of Heated Plate or Lower Surface of Cooled Plate:**

$$\overline{Nu}_L = 0.54 Ra_L^{1/4} \quad (10^4 \leq Ra_L \leq 10^7) \tag{9.30}$$

$$\overline{Nu}_L = 0.15 Ra_L^{1/3} \quad (10^7 \leq Ra_L \leq 10^{11}) \tag{9.31}$$

**Lower Surface of Heated Plate or Upper Surface of Cooled Plate:**

$$\overline{Nu}_L = 0.27 Ra_L^{1/4} \quad (10^5 \leq Ra_L \leq 10^{10}) \tag{9.32}$$

is based on the characteristic length $L$ of the geometry. Typically, $n = \frac{1}{4}$ and $\frac{1}{3}$ for laminar and turbulent flows, respectively. For turbulent flow it then follows that $\bar{h}_L$ is independent of $L$. Note that all properties are evaluated at the film temperature, $T_f \equiv (T_s + T_\infty)/2$.

### 9.6.1 The Vertical Plate

Expressions of the form given by Equation 9.24 have been developed for the vertical plate [5–7] and are plotted in Figure 9.6. The coefficient $C$ and the exponent $n$ depend on the Rayleigh number range, and for Rayleigh numbers less than $10^4$, the Nusselt number should be obtained directly from the figure.

A correlation that may be applied over the *entire* range of $Ra_L$ has been recommended by Churchill and Chu [8] and is of the form

$$\overline{Nu}_L = \left\{0.825 + \frac{0.387 Ra_L^{1/6}}{[1 + (0.492/\mathrm{Pr})^{9/16}]^{8/27}}\right\}^2 \tag{9.26}$$

Although Equation 9.26 is suitable for most engineering calculations, slightly better accuracy may be obtained for laminar flow by using [8]

$$\overline{Nu}_L = 0.68 + \frac{0.670 Ra_L^{1/4}}{[1 + (0.492/Pr)^{9/16}]^{4/9}} \qquad Ra_L \leq 10^9 \tag{9.27}$$

It is important to recognize that the foregoing results have been obtained for an isothermal plate (constant $T_s$). If the surface condition is, instead, one of uniform heat flux (constant $q_s''$), the temperature difference $(T_s - T_\infty)$ will vary with $x$, increasing from a value of zero at the leading edge. An approximate procedure for determining this variation may be based on results [8, 9] showing

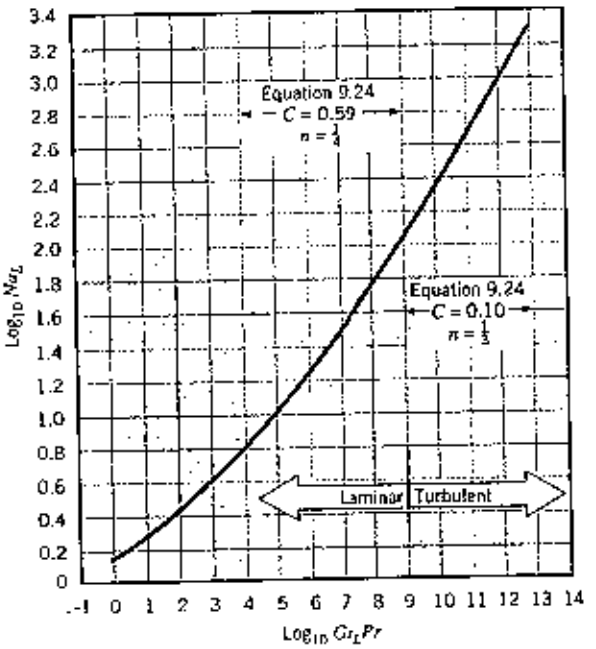


**Figure 9.6** Nusselt number for free convection heat transfer from a vertical plate [5–7].

***Analysis:*** For the quiescent air, Equation 9.12 gives

$$Gr_L = \frac{g\beta(T_s - T_\infty)L^3}{\nu^2}$$

$$= \frac{9.8\ \text{m/s}^2 \times (3.12 \times 10^{-3}\ \text{K}^{-1})(70 - 25)^\circ\text{C}(0.25\ \text{m})^3}{(17.95 \times 10^{-6}\ \text{m}^2/\text{s})^2} = 6.69 \times 10^7$$

Hence $Ra_L = Gr_L\,Pr = 4.68 \times 10^7$ and, from Equation 9.23, the free convection boundary layer is laminar. The analysis of Section 9.4 is therefore applicable. From the results of Figure 9.4, it follows that, for $Pr = 0.7$, $\eta \approx 6.0$ at the edge of the boundary layer, that is, at $y = \delta$. Hence

$$\delta_L \approx \frac{6L}{(Gr_L/4)^{1/4}} = \frac{6(0.25\ \text{m})}{(1.67 \times 10^7)^{1/4}} = 0.024\ \text{m}$$

For airflow at $u_\infty = 5$ m/s

$$Re_L = \frac{u_\infty L}{\nu} = \frac{(5\ \text{m/s}) \times 0.25\ \text{m}}{17.95 \times 10^{-6}\ \text{m}^2/\text{s}} = 6.97 \times 10^4$$

and the boundary layer is laminar. Hence from Equation 7.19

$$\delta_L \approx \frac{5L}{Re_L^{1/2}} = \frac{5(0.25\ \text{m})}{(6.97 \times 10^4)^{1/2}} = 0.0047\ \text{m}$$

***Comments:***

1. Boundary layer thicknesses are typically larger for free convection than for forced convection.
2. $(Gr_L/Re_L^2) = 0.014 \ll 1$, and the assumption of negligible buoyancy effects for $u_\infty = 5$ m/s is justified.

## 9.6 *Empirical Correlations: External Free Convection Flows*

In this section we summarize empirical correlations that have been developed for common *immersed* (external flow) geometries. The correlations are suitable for most engineering calculations and are generally of the form

$$\overline{Nu}_L = \frac{\bar{h}L}{k} = C\,Ra_L^n \tag{9.24}$$

where the Rayleigh number,

$$Ra_L = Gr_L\,Pr = \frac{g\beta(T_s - T_\infty)L^3}{\nu\alpha} \tag{9.25}$$

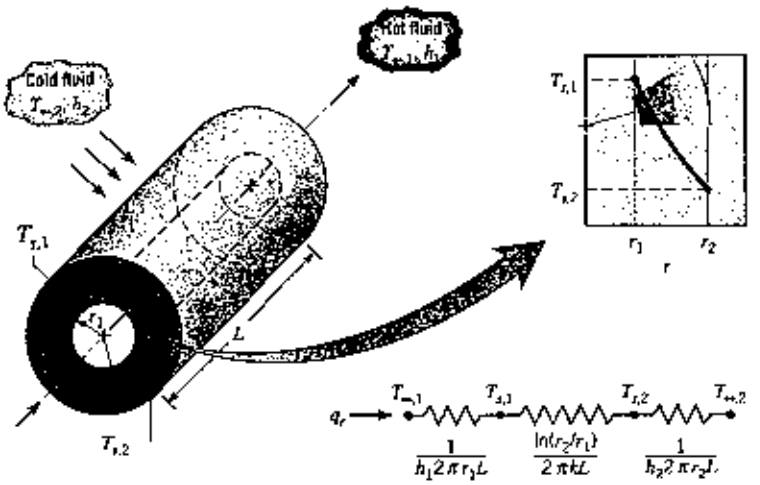


**FIGURE 3.6** Hollow cylinder with convective surface conditions.

from Equation 3.24 that the conduction *heat transfer rate* $q_r$ (*not* the heat flux $q''_r$) is a *constant in the radial direction.*

We may determine the temperature distribution in the cylinder by solving Equation 3.23 and applying appropriate boundary conditions. Assuming the value of $k$ to be constant, Equation 3.23 may be integrated twice to obtain the general solution

$$T(r) = C_1 \ln r + C_2 \tag{3.25}$$

To obtain the constants of integration $C_1$ and $C_2$, we introduce the following boundary conditions:

$$T(r_1) = T_{s,1} \qquad \text{and} \qquad T(r_2) = T_{s,2}$$

Applying these conditions to the general solution, we then obtain

$$T_{s,1} = C_1 \ln r_1 + C_2 \qquad \text{and} \qquad T_{s,2} = C_1 \ln r_2 + C_2$$

Solving for $C_1$ and $C_2$ and substituting into the general solution, we then obtain

$$T(r) = \frac{T_{s,1} - T_{s,2}}{\ln(r_1/r_2)} \ln\left(\frac{r}{r_2}\right) + T_{s,2} \tag{3.26}$$

Note that the temperature distribution associated with radial conduction through a cylindrical wall is logarithmic, not linear, as it is for the plane wall under the same conditions. The logarithmic distribution is sketched in the insert of Figure 3.6.

If the temperature distribution, Equation 3.26, is now used with Fourier's law, Equation 3.24, we obtain the following expression for the heat transfer rate:

$$q_r = \frac{2\pi L k(T_{s,1} - T_{s,2})}{\ln(r_2/r_1)} \tag{3.27}$$

From this result it is evident that, for radial conduction in a cylindrical wall, the thermal resistance is of the form

For liquids of moderate Prandtl number, such as water, Eq. (4.98) can also be used for $\mathrm{Ra} < 10^5$. For higher Rayleigh numbers, the Globe and Dropkin correlation [34] may be used for horizontal layers:

$$\overline{\mathrm{Nu}}_L = 0.069\mathrm{Ra}_L^{1/3}\mathrm{Pr}^{0.074}; \qquad 3 \times 10^5 < \mathrm{Ra}_L < 7 \times 10^9 \tag{4.102}$$

Also, for horizontal layers of air, that is, $\theta = 0°$, the range of validity of Eq. (4.98) extends to $\mathrm{Ra}_L = 10^8$.

Data are available in the literature for inclined layers of small aspect ratio but have not been correlated in a satisfactory manner.

In vertical cavities of small aspect ratio, with the horizontal surfaces insulated, as shown in Fig. 4.38, the following correlations due to Berkovsky and Polevikov [35] may be used for fluids of any Prandtl number.

1. $2 < H/L < 10$:

$$\overline{\mathrm{Nu}}_L = 0.22\left(\frac{\mathrm{Pr}}{0.2 + \mathrm{Pr}}\mathrm{Ra}_L\right)^{0.28}\left(\frac{H}{L}\right)^{-1/4}; \qquad \mathrm{Ra}_L < 10^{10} \tag{4.103a}$$

2. $1 < H/L < 2$:

$$\overline{\mathrm{Nu}}_L = 0.18\left(\frac{\mathrm{Pr}}{0.2 + \mathrm{Pr}}\mathrm{Ra}_L\right)^{0.29}; \qquad 10^3 < \frac{\mathrm{Pr}}{0.2 + \mathrm{Pr}}\mathrm{Ra}_L \tag{4.103b}$$

The flow and convective heat transfer in small-aspect-ratio cavities can depend on the temperature variation along the separating walls and, hence, on conduction in the walls and on radiation exchange within the cavity.

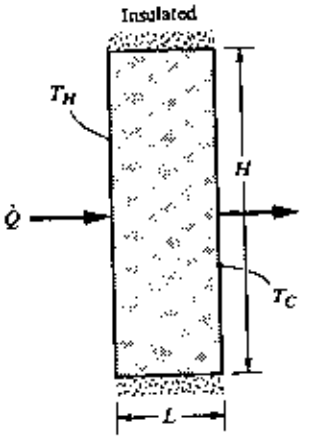


**Figure 4.38** Schematic of a small-aspect-ratio vertical enclosure.

### *Concentric Cylinders and Spheres*

Figure 4.39 shows isotherms for natural convection between concentric cylinders, with the inner cylinder heated and the outer cylinder cooled. The correlations recommended by Raithby and Hollands [36] for natural convection between concentric

oss the layer is by

limit of $\overline{\mathrm{Nu}}_L = 1$,
ted that a horizontal
of $(T_H - T_C)$. In
cellular convection

gh number increases,
until finally the flow
d contained between
occurs for any $\mathrm{Ra}_L >$
$\mathrm{Ra}_L < 10^3$. As the
l cells are formed. At
undary layer flowing
hile the fluid in the
al rows of horizontal
core finally becomes

gh number are charac-
es. Thus, it would be
d over wide Rayleigh
are usually valid for
omplex. Thus, only a

gineering importance.
ids and coworkers for

$$+ \left[\left(\frac{\mathrm{Ra}_L \cos\theta}{5830}\right)^{1/3} - 1\right] \tag{4.98}$$

, it must be set equal

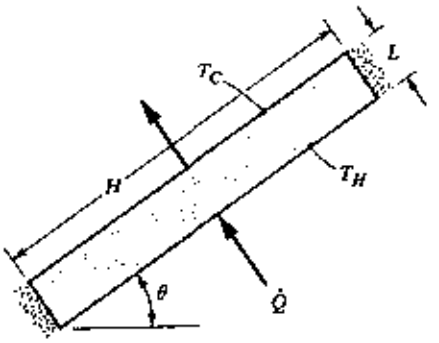


**Figure 4.37** Schematic of a large-aspect-ratio inclined enclosure. The angle $\theta$ is measured from the horizontal.

2. $\theta = 60°$ [33]:

$$\overline{\mathrm{Nu}}_{L60°} = \max\{\mathrm{Nu}_1,\ \mathrm{Nu}_2\} \tag{4.99}$$

where

$$\mathrm{Nu}_1 = \left\{1 + \left[\frac{0.0936\mathrm{Ra}_L^{0.314}}{1 + \{0.5/[1 + (\mathrm{Ra}_L/3160)^{20.6}]^{0.1}\}}\right]^7\right\}^{1/7}$$

$$\mathrm{Nu}_2 = \left(0.104 + \frac{0.175}{H/L}\right)\mathrm{Ra}_L^{0.283}$$

and is valid for $0 < \mathrm{Ra}_L < 10^7$.

3. $60° < \theta < 90°$ [33]:

$$\overline{\mathrm{Nu}}_L = \left(\frac{90 - \theta}{30}\right)\overline{\mathrm{Nu}}_{L60°} + \left(\frac{\theta - 60}{30}\right)\overline{\mathrm{Nu}}_{L90°} \tag{4.100}$$

4. $\theta = 90°$ [33]:

$$\overline{\mathrm{Nu}}_{L90°} = \max\{\mathrm{Nu}_1,\ \mathrm{Nu}_2,\ \mathrm{Nu}_3\} \tag{4.101}$$

where

$$\mathrm{Nu}_1 = 0.0605\mathrm{Ra}_L^{1/3}$$

$$\mathrm{Nu}_2 = \left\{1 + \left[\frac{0.104\mathrm{Ra}_L^{0.293}}{1 + (6310/\mathrm{Ra}_L)^{1.36}}\right]^3\right\}^{1/3}$$

$$\mathrm{Nu}_3 = 0.242\left(\frac{\mathrm{Ra}_L}{H/L}\right)^{0.272}$$

and is valid for $10^3 < \mathrm{Ra}_L < 10^7$; for $\mathrm{Ra}_L \leq 10^3$, $\overline{\mathrm{Nu}}_{L90°} \simeq 1$.

required for the fluid to become unstable, then heat transfer across the layer is by conduction only, and from Eq. (1.9),

$$\dot{Q} = \frac{kA}{L}(T_H - T_C)$$

or

$$\overline{h}_c = \frac{k}{L}, \qquad \overline{\mathrm{Nu}}_L = 1$$

Thus, correlations for the Nusselt number always have a lower limit of $\overline{\mathrm{Nu}}_L = 1$, corresponding to pure conduction. In Section 4.2.1, it was indicated that a horizonal layer heated from below becomes unstable at a critical value of $(T_H - T_C)$. In dimensionless form, the criterion for instability and the onset of cellular convection is a critical value of the Rayleigh number,

$$\mathrm{Ra}_L = \frac{g\beta(T_H - T_C)L^3}{\nu\alpha} = 1708$$

As the temperature difference $(T_H - T_C)$ and, hence, the Rayleigh number increases, there are transitions to increasingly more complex flow patterns until finally the flow in the core is turbulent. In the case of a vertical layer of fluid contained between parallel plates maintained at different temperatures, circulation occurs for any $\mathrm{Ra}_L > 0$; however, heat transfer is essentially by pure conduction for $\mathrm{Ra}_L < 10^3$. As the Rayleigh number is increased, the circulating flow develops and cells are formed. At $\mathrm{Ra}_L \simeq 10^4$ the flow changes to a boundary layer type with a boundary layer flowing upward on the hot wall and downward on the cold wall, while the fluid in the core region remains relatively stationary. At $\mathrm{Ra}_L \simeq 10^5$, vertical rows of horizontal vortices develop in the core; and at $\mathrm{Ra}_L \simeq 10^6$, the flow in the core finally becomes turbulent.

The marked changes in flow pattern with changes in Rayleigh number are characteristic of internal natural convection in all shapes of enclosures. Thus, it would be unreasonable to seek a single simple correlation formula valid over wide Rayleigh and Prandtl number ranges. Simple power law–type formulas are usually valid for small ranges of Ra; more general formulas are usually quite complex. Thus, only a few configurations will be considered here.

Heat transfer across thin air layers is of considerable engineering importance. Referring to Fig. 4.37, correlations recommended by Hollands and coworkers for aspect ratios of $H/L > 10$ are as follows.

**1.** $0 \le \theta < 60°$ [32]:

$$\overline{\mathrm{Nu}}_L = 1 + 1.44\left[1 - \frac{1708}{\mathrm{Ra}_L \cos\theta}\right]\left\{1 - \frac{1708(\sin 1.80)^{1.6}}{\mathrm{Ra}_L \cos\theta}\right\} + \left[\left(\frac{\mathrm{Ra}_L \cos\theta}{5830}\right)^{1/3} - 1\right] \tag{4.98}$$

where if either of the terms in square brackets is negative, it must be set equal to zero. Equation (4.98) is valid for $0 < \mathrm{Ra}_L < 10^5$.

For $L = \pi D/2 = 0.47$ m,

$$\overline{\mathrm{Nu}}_L = 0.52(\mathrm{Gr}_L\mathrm{Pr})^{1/4} = (0.52)\left(\frac{(1/400)(200)(9.81)(0.47)^3(0.69)}{(25.5 \times 10^{-6})^2}\right)^{1/4} = 79.3$$

$$\bar{h}_c = \left(\frac{k}{L}\right)\mathrm{Nu}_L = \left(\frac{0.0331}{0.47}\right)79.3 = 5.58 \text{ W/m}^2\text{ K}$$

**Comments**

1. The more approximate Eq. (4.91) gives a value of $\bar{h}_c$ that is 18% higher than that from Eq. (4.87).
2. Use CONV to check $\bar{h}_c$.

### 4.4.2 Internal Natural Flows

Figure 4.36 shows a selection of enclosures in which natural convection is of engineering concern—for example, in flat-plate solar collectors, wall cavities, and window glazing. The horizontal layer heated from below was discussed in Section 4.2.1, where an appropriate definition of the convective heat transfer coefficient was shown to be

$$\bar{h}_c = \frac{\dot{Q}/A}{T_H - T_C}$$

The length parameter commonly used to define the Nusselt number is the plate spacing $L$. If the temperature difference $(T_H - T_C)$ is less than the critical value

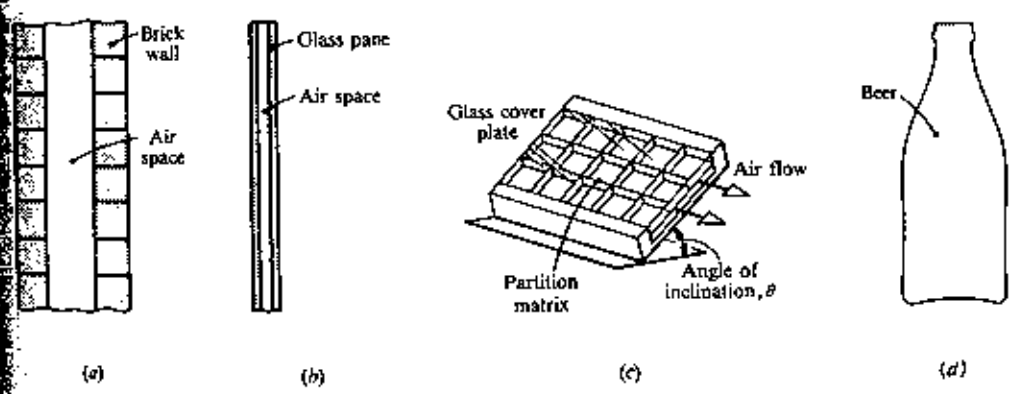


**Figure 4.36** Enclosures. (*a*) A double wall with an air gap. (*b*) Double window glazing. (*c*) A flat-plate solar collector with a partition to suppress natural convection. (*d*) Sterilization of beer by condensing steam.

## Sizing

### Physical Properties

| Gas or Vapor | M Molecular Weight | k Specific Heat Ratio | C Gas Constant |
|---|---|---|---|
| Acetone | 58.08 | 1.12 | 329 |
| Acetylene (Ethyne) | 26.04 | 1.26 | 343 |
| Air | 28.97 | 1.40 | 356 |
| Ammonia, Anhydrous | 17.03 | 1.31 | 348 |
| Argon | 39.95 | 1.67 | 378 |
| Benzene (Benzol or Benzole) | 78.11 | 1.12 | 329 |
| Boron Trifluoride | 67.82 | 1.20 | 337 |
| Butadiene-1,3 (Divinyl) | 54.09 | 1.12 | 329 |
| Butane-n (Normal Butane) | 58.12 | 1.09 | 326 |
| Butylene (1-Butene) | 56.11 | 1.11 | 328 |
| Carbon Dioxide | 44.01 | 1.29 | 346 |
| Carbon Disulfide (C. Bisulfide) | 76.13 | 1.21 | 33 |
| Carbon Monoxide | 28.01 | 1.40 | 356 |
| Carbon Tetrachloride | 153.82 | 1.11 | 328 |
| Chlorine | 70.91 | 1.36 | 353 |
| Chloromethane (Methyl Chloride) | 50.49 | 1.28 | 345 |
| Cyclohexane | 84.16 | 1.09 | 326 |
| Cyclopropane (Trimethylene) | 42.08 | 1.11 | 328 |
| Decane-n | 142.29 | 1.04 | 320 |
| Diethylene Glycol (DEG) | 106.17 | 1.07 | 323 |
| Dimethyl Ether (Methyl Ether) | 46.07 | 1.11 | 328 |
| Dowtherm A | 165.00 | 1.05 | 321 |
| Dowtherm E | 147.00 | 1.00 | 315 |
| Ethane | 30.07 | 1.19 | 336 |
| Ethyl Alcohol (Ethanol) | 46.07 | 1.13 | 330 |
| Ethylene (Ethene) | 28.05 | 1.24 | 341 |
| Ethylene Glycol | 62.07 | 1.09 | 326 |
| Ethylene Oxide | 44.05 | 1.21 | 338 |
| Fluorocarbons: | | | |
| 12, Dichlorodifluoromethane | 120.93 | 1.14 | 331 |
| 13, Chlorotrifluoromethane | 104.47 | 1.17 | 334 |
| 13B1, Bromotrifluoromethane | 148.93 | 1.14 | 331 |
| 22, Chlorodifluoromethane | 86.48 | 1.18 | 335 |
| 115, Chloropentafluoroethane | 154.46 | 1.08 | 324 |
| Glycerine (Glycerin or Glycerol) | 92.10 | 1.06 | 322 |
| Helium | 4.00 | 1.67 | 378 |
| Heptane | 100.21 | 1.05 | 321 |

# Sizing – Determining $K_v$ and $K_w$

### English Units

$$R = \frac{V_L\,(2{,}800\ G)}{\mu\sqrt{A}}$$

or

$$R = \frac{12{,}700\ V_L}{U\sqrt{A}}$$

### Metric Units

$$R = \frac{31{,}313\ V_L\ G}{\mu\sqrt{A}}$$

### Determining $K_v$

$V_L$ = Flow rate at the flowing temperature, in U.S. gpm [m³/h]

G = Specific gravity of liquid at flowing temperature referred to water = 1.00 at 70°F [21°C]

$\mu$ = Absolute viscosity at the flowing temperature, in centipoises

A = Effective discharge area, in square inches [cm²] (from manufacturer's standard orifice areas)

U = Viscosity at the flowing temperature, in Saybolt Universal seconds

After the value of R is determined, the factor $K_v$ is obtained from the graph. Factor $K_v$ is applied to correct the 'preliminary required discharge area.' If the corrected area exceeds the 'chosen standard orifice area,' the calculations should be repeated using the next larger standard orifice size.

### Determining $K_w$

See graph at right.

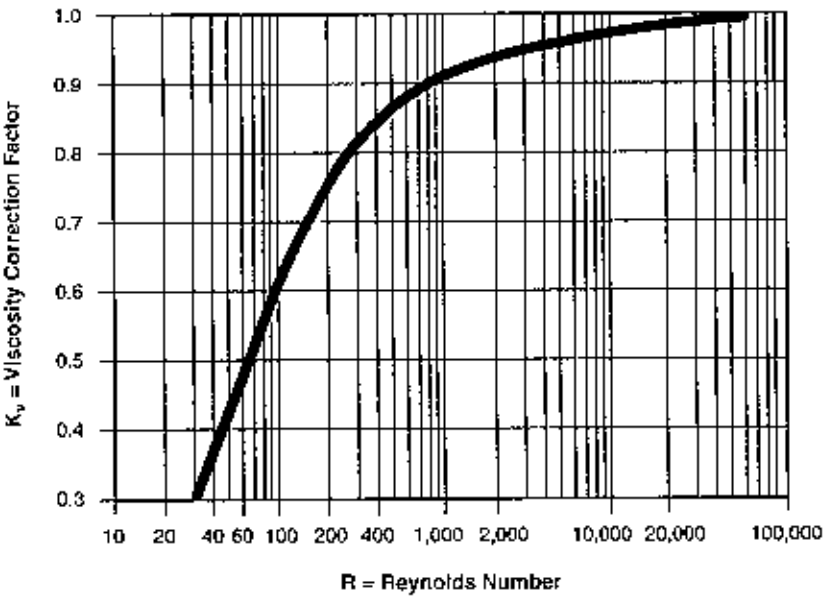


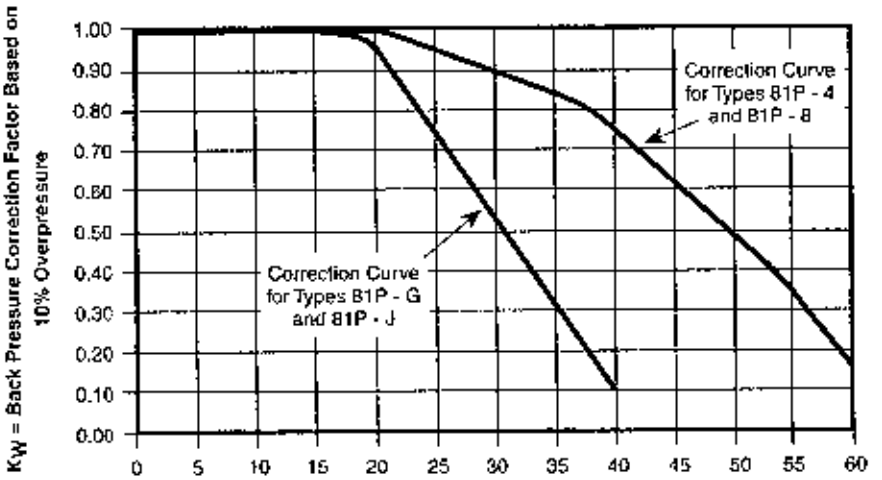


$$\text{Percentage Back Pressure} = \frac{\text{Back Pressure, psig [barg]}}{\text{Set Pressure, psig [barg]}} \times 100$$

# Anderson, Greenwood & Co.

## Premium Performance Direct Spring Valves - Series 60 and 80

### Preliminary Selection Guide

| Valve Type | Applications: Gas/Vapor | Liquid | Gas/Liquid Thermal Relief | Steam | Seat Type | Body Material: Brass | CS | SS | Set Pressure psig | [barg] | Relieving Temperature °F | [°C] | Balanced for Back Pressure |
|---|---|---|---|---|---|---|---|---|---|---|---|---|---|
| 81 | X | | X | | Plastic | X | X | X | 50 to 10,000 | [3.45 to 689.5] | -423°F to 500°F | [-253°C to 260°C] | N |
| 81P | | X | X | | Plastic | X | X | X | 50 to 6,000 | [3.45 to 413.7] | -40°F to 400°F | [-40°C to 205°C] | Y |
| 83 | X | | X | | O-ring | X | X | X | 20 to 10,000 | [1.40 to 689.5] | -40°F to 550°F | [-40°C to 288°C] | N |
| 83F | X | | X | | O-ring | | | X | 15 to 500 | [1.03 to 34.5] | -40°F to 550°F | [-40°C to 288°C] | N |
| 86 | | | | X | Plastic | X | X | X | 50 to 720 | [3.45 to 49.6] | -423°F to 515°F | [-253°C to 268°C] | N |
| 61 | X | | X | | Plastic | X | | | 30 to 500 | [2.07 to 34.5] | -320°F to 400°F | [-196°C to 205°C] | N |
| 63B | X | | X | | O-ring | X | | | 37 to 531 | [2.55 to 36.6] | -40°F to 400°F | [-40°C to 205°C] | N |

**Note**

1. Minimum and maximum set pressures may not be available in all orifice sizes (see pages 19 - 22).

## Sizing – How to Size a Valve

Pressure relief valves are selected on the basis of their ability to meet an expected relieving condition and flowing a sufficient amount of fluid to prevent excessive pressure increase. This means that the size of the valve orifices must be calculated taking the required flow, lading fluid properties, and other factors into consideration.

To select the minimum required orifice area that will flow the required capacity of the system you wish to protect, please refer to the following information, which appears in this section:

1. Sizing formulas
2. Physical properties of the fluid to be relieved
3. Capacities of different orifice areas at different pressures
4. Conversion tables to aid calculations

Once you have determined the required orifice area for your service conditions, refer to Ordering, pages 54 through 83, to select a specific valve model number.

### Orifice Areas and Nozzle Coefficient

The orifice areas and nozzle coefficients for all Series 60 valves are tabulated in the table below.

These values are derived from the values certified by the National Board of Boiler and Pressure Vessel Inspectors, in accordance with Section VIII, Division 1 of the ASME Pressure Vessel Code.

### Verification of Sizing

Orifice area calculations are made and/or verified whenever sufficient data is provided. If no data is furnished, the size selection responsibility will remain totally with the purchaser.

### Nozzle Coefficient and Available Orifice Sizes, in² [cm²]

| Valve Type | K ~3 .028 in² | 0.049 [0.316] (-4) | 0.077 [0.497] (-5) | 0.110 [0.710] (-6) | 0.150 [0.968] (-7) | 0.196 [1.265] (-8 or E) | 0.307 [1.981] (F) | 0.503 [3.245] (G) | 0.785 [5.065] (H) | 1.287 [8.303] (J) |
|---|---|---|---|---|---|---|---|---|---|---|
| 81 | 0.816 | X | | X | | X | X | X | X | X |
| 81P | 0.720 | X | | | | X | | X | | X |
| 83 | 0.816 | X | | X | | X | X | X | X | X |
| 83F | 0.998 | | | | | X | | X | | X |
| 86 | 0.816 | X | | | | X | | X | | X |
| 61 | 0.877 | | | X | | | | | | |
| 63B | 0.847 | | X | | X | | | | | |

# Sizing – English Sizing Formulas

Vapors or Gases (capacity in SCFM)[1]

$$A = \frac{V\sqrt{MTZ}}{6.32\,CKP_1}$$

Vapors or Gases (capacity in lbs/h)[1]

$$A = \frac{W\sqrt{TZ}}{CKP_1\sqrt{M}}$$

Steam (capacity in lb/h)[1]

$$A = \frac{W}{51.5\,K\,P_1\,K_s}$$

Liquids (capacity in gpm)

$$A = \frac{V_L\sqrt{G}}{38\,K\,K_P\,K_W\,K_V\sqrt{P_A - P_B}}$$

## English Sizing Formulas

Orifice area calculations are made and/or verified whenever sufficient data is provided. If no data is furnished, the size selection responsibility will remain totally with the purchaser.

V = Required capacity, SCFM

W = Required capacity, lb/h

$V_L$ = Required capacity, gpm

G = Specific gravity of liquid at flowing temperature referred to water = 1.00 at 70°F (see Physical Properties on pages 12 - 14)

M = Molecular weight of vapor or gas (M = 29 x G, see Physical Properties on pages 10 - 11)

T = Relief temperature, °R (°R = °F + 460)

Z = Compressibility factor (if unknown, assume Z = 1.0)

k = Specific heat ratio $k = \frac{C_p}{C_V}$

C = Gas constant based on k (if unknown, assume C = 315; see Physical Properties on pages 10 - 11; also see page 8)

K = Nozzle coefficient for 90 percent of actual capacity, derived from National Board Certified Testing (see page 4)

$P_1$ = Inlet flowing pressure, psia = Set pressure - inlet pressure loss + allowable overpressure + 14.7

$P_A$ = Inlet flowing pressure, psig = Set pressure - inlet pressure loss + allowable overpressure

$P_B$ = Back pressure - psig

$K_p$ = Overpressure correction factor, 1.0

$K_w$ = Back pressure correction factor (see page 7)

$K_v$ = Viscosity correction factor (see page 7)

$K_s$ = Superheat correction factor (for saturated steam, $K_s$ = 1.0, refer to Table on page 9)

**Note**

1. As is accepted industry practice, back pressure for conventional (unbalanced) gas or steam valves should not exceed 10 percent.

# Model 9460 and 9470 Series

## ULTRA-LINE® Dual-Stage Ultra High-Purity Stainless Steel Regulator with Tied Diaphragms

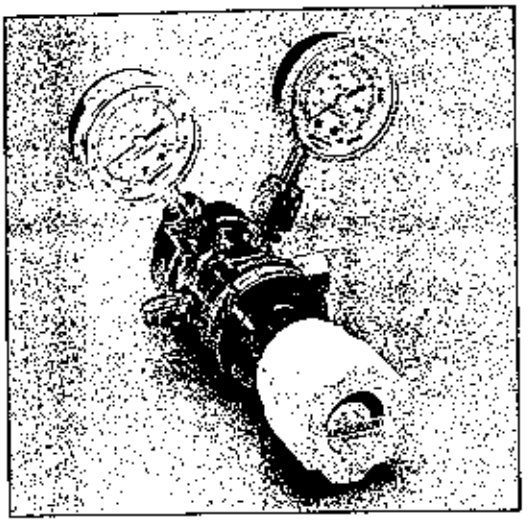

### Design Features/Components

- Available in two choices of materials: 316L stainless steel with 316 stainless steel internals (Model 9460 Series), or 316L stainless steel with Hastelloy C-22 internals (Model 9470 Series).
- Dual tied seat design ensures regulator closure under extreme conditions
- 2" inlet and delivery pressure gauges
- Autogeneous butt-welded connections
- The seats are the only non-metallic components in the process stream
- Standard 10-15 Ra surface finish
- Sealed and ventable bonnets
- Helium leak tested to 1 x $10^{-9}$ scc/sec
- Assembled, tested and packaged in a Class 100 clean area

### Materials of Construction

| | Model 9460 Series | Model 9470 Series |
|---|---|---|
| Gauges: | 316L stainless steel | 316L stainless steel |
| Body: | 316L stainless steel | 316L stainless steel |
| Bonnets: | Nickel plated brass | Nickel plated brass |
| Diaphragms: | 316 stainless steel | Hastelloy C-22 |
| Seats: | Kel-F 81 | Kel-F 81 |
| Linkages: | 316 stainless steel | Hastelloy C-22 |
| Springs: | 316 stainless steel | Hastelloy C-22 |
| Seals: | Metal to metal | Metal to metal |

### Description

Ultra high-purity stainless steel regulators for use with semiconductor applications.

### Applications

- All semiconductor industry applications requiring precise pressure control.

### Specifications

| | |
|---|---|
| Maximum Inlet Pressure: | 3000 psig (20,700) |
| Maximum Flow Rate: (At 3000 psig Inlet, $N_2$) | 5 SCFM (150 SLPM) |
| Flow Capacity (Cv): | 0.05 |
| Operating Temperature: | -40°F to 160°F (-40°C to 71°C) |
| Porting: | 1/4" VCR compatible |
| Shipping Weight: | 5 lbs |

### Ordering Information

All of the Model 9460 and 9470 Series are shipped double bagged under purified Argon. All gauges used are 100% Helium leak tested and have female 1/4" VCR compatible connections.

$1250
5 days

| Model Number | Delivery Pressure Range | Delivery Pressure Gauge | Inlet Pressure Gauge |
|---|---|---|---|
| **316L Stainless Steel Regulators** | | | |
| 9463-4-V4FM | 0-30 psig | 30" vac-0-60 psig | 0-3000 psig |
| 9463-4-V4MM | 0-30 psig | 30" vac-0-60 psig | 0-3000 psig |
| 9467-4-V4FM | 0-100 psig | 30" vac-0-200 psig | 0-3000 psig |
| 9467-4-V4MM | 0-100 psig | 30" vac-0-200 psig | 0-3000 psig |
| **316L Stainless Steel Regulators with Hastelloy C-22 Internal Parts** | | | |
| 9473-4-V4FM | 0-30 psig | 30" vac-0-60 psig | 0-3000 psig |
| 9473-4-V4MM | 0-30 psig | 30" vac-0-60 psig | 0-3000 psig |
| 9477-4-V4FM | 0-100 psig | 30" vac-0-200 psig | 0-3000 psig |
| 9477-4-V4MM | 0-100 psig | 30" vac-0-200 psig | 0-3000 psig |

*Inlet/Outlet:*
*F = Female M = Male*

*G—4*

# NUCLEATE BOILING OF NITROGEN, ARGON, AND CARBON MONOXIDE FROM ATMOSPHERIC TO NEAR THE CRITICAL PRESSURE

**C. Johler* and E. L. Park, Jr.**

*University of Missouri at Rolla, Rolla, Missouri*

## INTRODUCTION

The nucleate-boiling region is of great importance to the engineer because in this region large quantities of heat can be removed with relatively low temperature differences. This study was initiated to study the boiling behavior of carbon monoxide and to compare carbon monoxide's nucleate-boiling behavior to the boiling behavior of other cryogenic fluids (nitrogen and argon).

## PREVIOUS WORK

Previous work will be reviewed only briefly since a more complete coverage is given elsewhere [1].

The nucleate-boiling region is characterized by bubbles originating from active sites called nuclei. Many authors [2–12] have presented work which indicate that nucleation sites are small imperfections in the heat transfer surface and that the nucleate-boiling heat transfer is a strong function of the surface conditions. Although several investigators [2,6,13] have studied bubble dynamics and frequency of release of bubbles, the correlation of these variables has not resulted in a general equation which will predict nucleate-boiling behavior.

The maximum heat-flux point of the nucleate-boiling curve has proven to be an area of great interest. Many attempts have been made to develop a correlating equation for predicting the maximum heat flux, but such equations have been used with only limited success.

By defining a universal bubble-departure velocity near the critical heat flux, Rohsenow and Griffith [14] developed the following equation:

$$\frac{(Q/A)_{max}}{\rho_v L} = 143 \left(\frac{\rho_L - \rho_v}{\rho_v}\right)^{0.6} \qquad (1)$$

Kutateladze [15] derived a similar equation independently by the use of dimensional analysis.

*Present address: Shell Oil Company, Wood River, Illinois.

Equation (2) was developed by Zuber [16] based on Helmholtz's instability for two-phase flow involving liquid and vapor.

$$\frac{(Q/A)_{max}}{\rho_v L} = \frac{\pi}{24}\left(\sigma g \frac{\rho_L - \rho_v}{\rho_v^2} g_c\right)^{1/4}\left(\frac{\rho_L}{\rho_L + \rho_v}\right)^{1/2} \tag{2}$$

On the other hand, Cichelli and Bonilla [17], using experimental data from many organic liquids, developed an empirical equation of the form

$$\frac{(Q/A)_{max}}{P_r} = \alpha f(P_r) \tag{3}$$

Applying thermodynamic similarity and the Clausius-Clapeyron equation, Lienhard and Schrock [18] obtained an equation similar to (3), involving the definition of a parachor.

To eliminate the effect of surface variables, Cobb and Park [19] developed an equation with a reduced pressure of 0.1.

$$\left\{\frac{(Q/A)_{max}}{(Q/A)_{max}}\right\}_{P_r = 0.1} = 1.70 + 3.90\,T_r - 0.048\,T_r^2 + 2.41\,T_r^3 + 7.58\,T_r^4 + 5.20\,T_r^5 - 12.88\,T_r^6 \tag{4}$$

## EQUIPMENT AND EXPERIMENTAL PROCEDURE

The experimental equipment includes a pressure and condensing system, a heating element, an electrical system, and a temperature measuring system. Since the equipment has been described in detail previously [1,19] it will not be repeated.

The procedure followed during the data acquisition is briefly described below. Before filling the autoclave, liquid nitrogen was allowed to circulate through the internal condenser to aid in cooling the vessel. Carbon monoxide and argon were available in the gaseous state and were condensed inside the autoclave by regulating the gas flow through the fill line and into the vessel. Continued circulation of liquid nitrogen through the internal condenser caused the gas to condense, until the required liquid level was reached within the autoclave. However, to fill the autoclave with nitrogen, liquid nitrogen was charged through the fill line and into the vessel and was vented to the atmosphere.

When the liquid level was approximately 7 in., the vessel was closed to the atmosphere and the system pressure controlled by monitoring the nitrogen flow through the internal condenser. When the desired pressure was reached, power was supplied to the heating element. To achieve proper aging of the heat transfer surface, power was increased until a transition from nucleate boiling to film boiling was observed. The power was then turned off, and the heater allowed to cool to saturation temperature. This procedure of entering the film-boiling region was repeated each time the heater was exposed to the atmosphere.

With the liquid pool at the desired saturation temperature, power was once again supplied to the heating element. Temperature, amperage, and voltage were recorded after steady state was achieved by adjusting the nitrogen flow rate in the internal condenser. The power level was then raised and the next nucleate-boiling point was recorded. Intermittently between points, the thermocouple recording the pool temperature was checked to observe any change in the saturation temperature. This procedure was continued until the burnout point was attained. Once a pressure run had been completed, the power was turned off and the pressure was adjusted to a new value. The previous steps were repeated at each pressure, until all of the desired nucleate-boiling curves for the specific liquid were recorded.

**Table I. Heat Transfer Surfaces**

| Surface No | Heater No | Characteristics of the surface |
|---|---|---|
| 1 | 1 | electroplated with gold — unaltered |
| 2 | 2 | electroplated with gold — unaltered |
| 3 | 2 | surface No. 2 boiled in tap water for 24 hr |
| 4 | 2 | surface No. 3 polished with a soft cloth wheel |

To check for reproducible results, the boiling curve at a reduced pressure of 0.1 was always the first and last boiling curve to be studied for a given liquid. The reduced pressure of 0.1 was chosen because of the desire to carefully examine the correlation developed previously by Cobb and Park [19].

The critical heat flux was defined by a rapid increase in temperature difference $\Delta T$. This rapidly rising $\Delta T$ was observed, for most runs, to occur as soon as the power was increased from the previous setting. Only in a few instances was the $\Delta T$ found to rise suddenly after the power setting had remained constant for several minutes. In the latter case, the last power setting was recorded as the critical heat flux; for the former case, the critical heat flux was recorded as an average of the last two power settings. The above procedure resulted in the following errors. The combined product errors of current and voltage for measuring heat fluxes are $\pm 0.125\%$, which is approximately equal to $\pm 50$ Btu/hr-ft$^2$ for the large heat fluxes obtained in this investigation. Temperature could be read to $\pm 0.001$ mV, equivalent to a temperature accuracy of $\pm 0.1$°F. Temperature differences deviated, on the average, by less than 1°F for corresponding heat fluxes.

## RESULTS

During the course of taking experimental boiling heat transfer data, four different heat transfer surfaces were used. Table I is a summary of the various gold heat transfer surfaces employed. Two heaters were necessary because of the failure of the heating

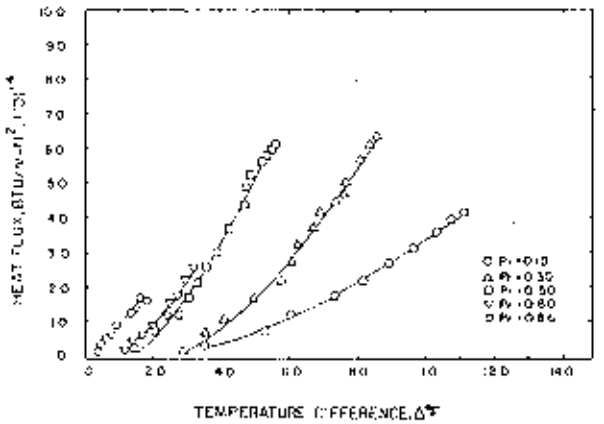


Fig. 1. Nucleate-boiling curves for liquid nitrogen on heat transfer surface No. 1.

$P_r = \frac{P}{P_c}$

$P_c = 33.5$ atm $= 492.3$ psi

Max at 34.2 psia $= 1.8 \times 10^4 \frac{\text{Btu}}{\text{hr-ft}^2}$

| $P_r$ | P (psia) | P psia |
|---|---|---|
| .1 | 49.2 | 34.2 |
| .3 | 147.7 | |
| .5 | 246.1 | |
| .8 | 393.8 | |
| .86 | 423.4 | |

$3.15 \frac{N}{m^2} \times \frac{1 m^2}{1550.003 in^2} = .00203 \frac{N}{in^2}$

$\frac{1 Btu}{hr\ ft^2} \times \frac{1055.06 J}{1 Btu} \times \frac{1 hr}{3600 sec} \times \frac{1 ft^2}{10.76 ft^2} \times \frac{1 m^2}{1 m^2}$

Fig. 2. Nucleate-boiling liquid nitrogen on he surface No. 2.

element within heat duced after this fail

Figures 1 thro reduced pressures nitrogen and liqui boiling curves beca their greatest value nucleate-boiling cu acterized by abbrev No. 2 yielded S-shap and liquid carbon n

**Critical Heat Flux an**

All critical flux and Park [19] maxim reference value, the critical heat flux thr

Fig. 3. Nucleate-boiling liquid argon on heat trans No. 2.

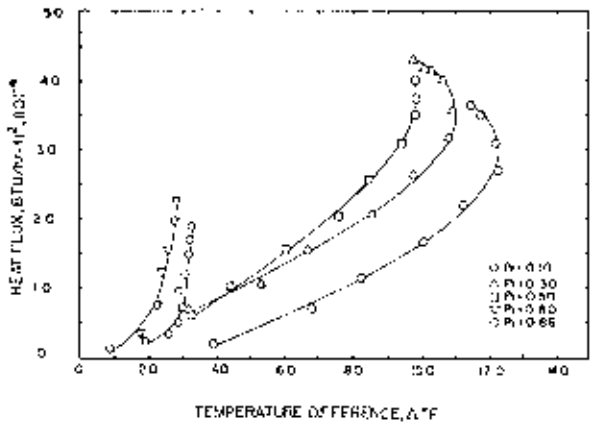


Fig. 2. Nucleate-boiling curves for liquid nitrogen on heat transfer surface No. 2.

element within heater No. 1. An entirely new heater and heating surface were introduced after this failure; however, both heaters were of the same design.

Figures 1 through 4 present a number of the nucleate-boiling curves at several reduced pressures for individual boiling surfaces. The boiling curves for liquid nitrogen and liquid argon followed the same general pattern. The slopes of the boiling curves became larger with increasing pressure, and the critical heat fluxes had their greatest values at reduced pressures ranging from 0.3 to 0.5. In contrast, the nucleate-boiling curves obtained with liquid carbon monoxide (Fig. 4) were characterized by abbreviated nucleate-boiling regions and low critical heat fluxes. Surface No. 2 yielded *S*-shaped boiling curves when boiling with liquid nitrogen, liquid argon, and liquid carbon monoxide.

## DISCUSSION

### Critical Heat Flux and Maximum Temperature Difference Correlations

All critical flux data for nitrogen and argon were correlated by using the Cobb and Park [19] maximum heat flux correlation. By using the reduced pressure of 0.1 as a reference value, the correlation eliminates the effect of heat transfer surface on the critical heat flux throughout a series of pressure runs. It must be emphasized that the

$P_r = \frac{P}{P_c}$ $P_{c_{Ar}} = 705.9$ psia

$P_r = 0.1$, $P = 70.59$ psia

40.5 W/in²

20.4 W/in²

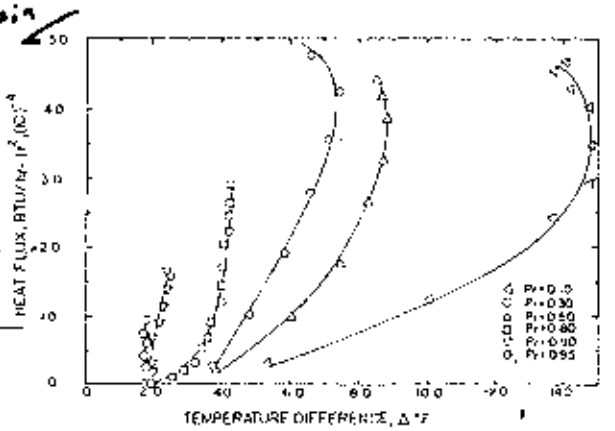


Fig. 3. Nucleate-boiling curves for liquid argon on heat transfer surface No. 2

FERMILAB DATA:

| | ΔT | | Q/A | |
|---|---|---|---|---|
| K | °F | | W/cm² | Btu/hr-ft² |
| 1 | 1.8 | | 0.3 | 951.8 |
| 7 | 12.6 | | 1.3 | 4,124.4 |
| 10 | 18 | | 1.7 | 5,393.4 |

$h_i = 330$ Btu/hr ft²-°R, 0.75 W/cm²

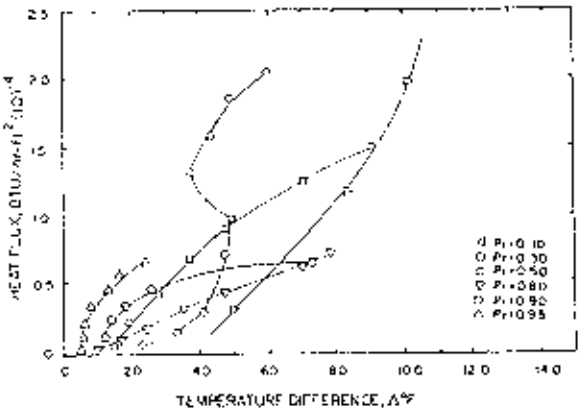


Fig. 4. Nucleate-boiling curves for liquid carbon monoxide on heat transfer surface No. 2.

heat-transfer surface should remain constant during a series of pressure runs for the correlation to be utilized.

An average error of 6.18% with a standard deviation of 18.2% was obtained when sixteen liquid nitrogen and liquid argon critical heat fluxes were compared to the Cobb and Park equation in Fig. 5.

The series of nitrogen runs with heating surface No. 1 deviates noticeably from the Cobb and Park equation at reduced pressure of 0.3 and 0.5. This deviation may be due to a change in the heat transfer surface during boiling.

Figure 6 compares the correlations of Zuber [16], Kutateladze [15], Rohsenow and Griffith [14], Lienhard and Schrock [18], and Cichelli and Bonilla [17] with the maximum heat flux data of this investigation. It is seen that only the equations of Zuber and Kutateladze predict values of the right order of magnitude. These two latter correlations were also compared with the argon data of this investigation.

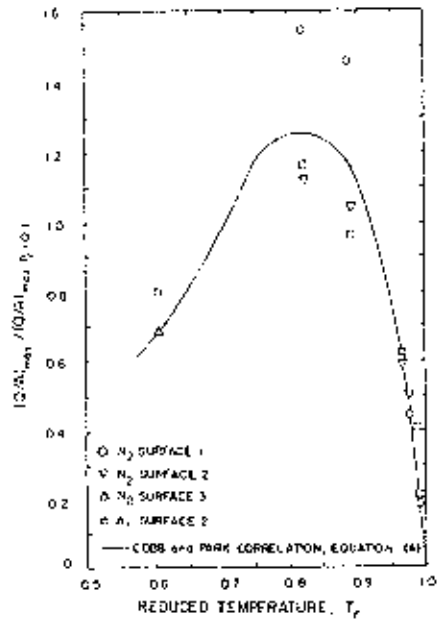


Fig. 5. Cobb and Park maximum heat flux correlation.

Fig. 6. Maximum heat fl
nitrogen.

However, it was fout
from the argon data.

**Heat Transfer Surfac**

Four different
nucleate-boiling run
condition of the he
nucleate-boiling curv
with surfaces 1 and
twice the slope of the
from surface 3 is alsc
surface 4 is highly p
curves initially have
critical heat flux is ap

Fig. 7. Nucleate-boiling c
liquid nitrogen on differ
transfer surfaces at 0.1 $P_c$

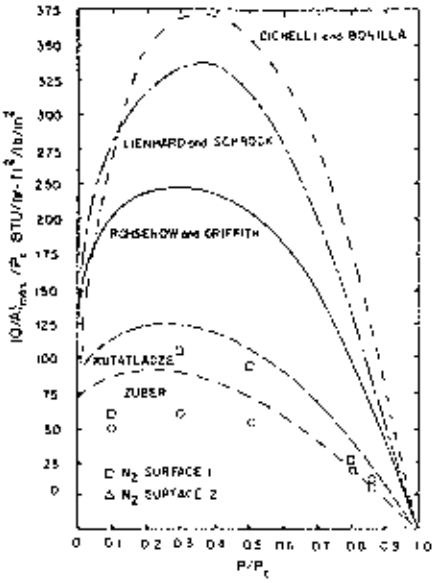


Fig. 6. Maximum heat flux correlations for liquid nitrogen.

However, it was found that all the above equations deviated several hundred percent from the argon data.

## Heat Transfer Surface Effects on Nucleate Boiling

Four different heat transfer surfaces were utilized during the experimental nucleate-boiling runs, as indicated in Table I. Figure 7 illustrates the effect of the condition of the heat transfer surface on the shape and slope of liquid nitrogen nucleate-boiling curves. Relatively smooth nucleate-boiling curves are associated with surfaces 1 and 4, but the slope of the surface 1 boiling curve is approximately twice the slope of the boiling curve exhibited by surface 4. The boiling curve obtained from surface 3 is also of greater slope than the surface 4 curve; as stated in Table I, surface 4 is highly polished and smoother than surface 3. Surface 2 and 3 boiling curves initially have similar slopes, but their shapes and slopes differ greatly as the critical heat flux is approached.

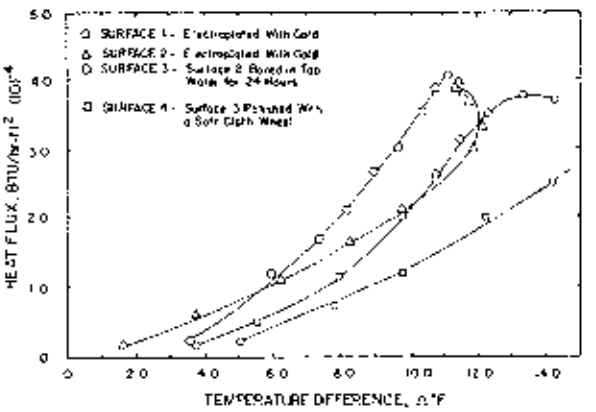


Fig. 7. Nucleate-boiling curves for liquid nitrogen on different heat transfer surfaces at 0.1 $P_c$.

The S-shaped curve associated with surface 2 is particularly unusual. S-shaped curves have been reported by several authors: Tang and Rotem [20], Rallis and Jawurek [21], Van Stralen [22], and Zuber [23]; however, the observation of such curves is relatively infrequent. Orell [24] gives further insight into the S-shaped curve by relating its appearance to a sudden increase in the nucleation site density.

Many authors—Stermen and Vilemas [26], Kosky [25], and Cobb and Park [19] have indicated the importance of the state of the heat transfer surface on the critical heat flux. Different pressure runs were reproduced to be sure that the heating surface had not changed during boiling. Eight boiling curves were duplicated at various pressures on unaltered heat transfer surfaces. Reproduction of the critical heat flux never deviated by more than 7%, and the average deviation for the eight critical fluxes reproduced was 3%. An inherent error of 3% was calculated for this heater arrangement.

In contrast, the five nitrogen reduced-pressure runs duplicated on surfaces 1 and 2 produced an average deviation of 17.5% among corresponding maximum heat fluxes. Similarly, a deviation of 24.0% was found between atmospheric critical heat fluxes on surfaces 1 and 3 while the maximum heat flux was decreased by 16.4% by polishing surface number 3.

Of the eight boiling curves duplicated on unaltered surfaces, five were not exposed to the atmosphere between checks for reproducibility and three were exposed. This exposure did not affect duplication of the maximum heat flux but did affect the reproducibility of the maximum temperature difference. The reproducibility of the maximum $\Delta T$ on the five unexposed surfaces never deviated by more than 7.2%, with an average deviation of 4.6%. The maximum $\Delta T$ on the three exposed surfaces varied with an average deviation of 19.9%.

**Nucleate Boiling of Carbon Monoxide**

Nucleate boiling of liquid carbon monoxide gave unusual results when compared to the experimental data of nitrogen and argon. Three boiling curves were duplicated at a reduced pressure of 0.1 and the average critical heat flux deviation was 11.3% for the same boiling surfaces. This high deviation might be accounted for by change in the heat transfer surface caused by carbon monoxide or by the unique behavior of the carbon monoxide critical heat flux as discussed below.

The critical heat fluxes of liquid argon and liquid nitrogen were defined by a sudden rise in surface temperature signaling the beginning of film boiling. In contrast, the pressure runs of liquid carbon monoxide, above the reduced pressure of 0.1, entered partial film boiling at relatively low heat fluxes. This partial film boiling was characterized by a slow increase in temperature difference with time at a constant heat flux. After several minutes had elapsed, the last $\Delta T$ was recorded before a rapid increase in surface temperature marked the initiation of fully developed film boiling. The last $\Delta T$ which was recorded in each run varied randomly in the range of 20 to 50°F with different pressure runs.

Lyon, Kosky, and Hartman [27] experienced the same phenomena of partial film boiling for liquid oxygen at higher pressures using a platinum surface. This behavior was attributed to the attainment of film boiling for a small section of the test element. It is apparent that a variation of pressure causes a change in the normal mechanisms of nucleate boiling for liquid oxygen and liquid carbon monoxide; adsorption of the oxygen molecule on the boiling surface at higher pressures may be an explanation.

The carbon monoxide nucleate-boiling runs were all obtained while boiling from heat transfer surface No. 2. This is the same surface that exhibited the S-shaped

boiling curves for
effects other than
with liquid carbon
source of the uniq
from different heat

The heat flux
flux for carbon m
monoxide coupled
increasing pressure

A family of nu
nitrogen, liquid arg
fluxes for these liq
176 and 130% larg
fluxes of liquid car

1. In contrast
liquid carb
at reduced p
2. When comp
wide range
fluxes of liq
magnitude.
3. Of the critic
to be the m
nitrogen an
4. Each boilin
with respect
5. For a given
various red
different he
6. Exposure of
heat flux on
by an avera

The authors would li
and the National Science

$A$ = area
$g$ = acceleration
$g_c$ = conversion f
$L$ = latent heat o
$P$ = pressure
$Q$ = rate of heat
$T$ = temperature
$\Delta T$ = temperature

**Greek Symbols**

$\sigma$ = surface tens
$\rho$ = density

boiling curves for liquid nitrogen and liquid argon. It may be possible that surface effects other than oxygen adsorption caused the premature film boiling observed with liquid carbon monoxide, and that these same unknown surface effects are the source of the unique S-shaped boiling curves. Nucleate boiling of carbon monoxide from different heat transfer surfaces should provide a definite answer to this question.

The heat flux that initiated partial film boiling was defined as the critical heat flux for carbon monoxide. Figure 4 shows the low critical heat fluxes of carbon monoxide coupled with the gradual disappearance of the nucleate boiling region with increasing pressure.

A family of nucleate-boiling pressure runs was made on surface No. 2 for liquid nitrogen, liquid argon, and liquid carbon monoxide. Comparison of the critical heat fluxes for these liquids shows that the argon and nitrogen critical heat fluxes average 176 and 130 % larger in magnitude, respectively, when compared to the critical heat fluxes of liquid carbon monoxide.

## CONCLUSIONS

1. In contrast to liquid nitrogen and liquid argon, the critical heat fluxes of liquid carbon monoxide are defined by the appearance of partial film boiling at reduced pressures ranging from 0.3 to near the critical pressure.
2. When compared to the critical heat fluxes of liquid carbon monoxide over a wide range of reduced pressures and for a given surface, the critical heat fluxes of liquid argon and liquid nitrogen average 176 and 130 % larger in magnitude, respectively.
3. Of the critical heat flux correlations tested, the Cobb and Park equation appears to be the most accurate for the correlation of the critical heat fluxes of liquid nitrogen and liquid argon.
4. Each boiling heat transfer surface has its own characteristic boiling curve with respect to both shape and slope.
5. For a given surface, the critical heat flux can be reproduced to within 3 % at various reduced pressures; however, it may vary as much as 25 % among different heat transfer surfaces.
6. Exposure of the heat-transfer surface to the atmosphere affects the critical heat flux only slightly, but does alter the maximum temperature difference by an average of 20 %.

## ACKNOWLEDGMENTS

The authors would like to acknowledge The American Chemical Society Petroleum Research Fund and the National Science Foundation which provided financial assistance during this investigation.

## NOTATION

$A$ = area
$g$ = acceleration due to gravity
$g_c$ = conversion factor in Newton's law of motion
$L$ = latent heat of vaporization
$P$ = pressure
$Q$ = rate of heat transfer
$T$ = temperature
$\Delta T$ = temperature difference ($T_{surface} - T_{boiling}$)

**Greek Symbols**

$\sigma$ = surface tension
$\rho$ = density

**Subscripts**

$l$ = refers to the liquid
$r$ = refers to reduced property
$v$ = refers to the vapor
max = refers to the point where the maximum heat flux occurs

## REFERENCES


1. C. Johler, M. S. Thesis, University of Missouri, Rolla, Rolla, Mo. (1969).
2. M. Jakob, *Heat Transfer, Vol. 1*, John Wiley and Sons, New York (1949).
3. S. G. Bankoff, *AIChE J.*, **4**:24 (1958).
4. S. G. Bankoff, *Chem. Eng. Progr. Symp. Ser.*, **55**:87 (1959).
5. P. J. Griffith and J. D. Wallis, *Chem. Eng. Progr. Symp. Ser.*, **56**:49 (1960).
6. V. E. Denny, Ph.D. Dissertation, University of Minnesota, Minneapolis, Minn. (1961).
7. H. B. Clark, P. S. Strenge, and J. W. Westwater, *Chem. Eng. Progr. Symp. Ser.*, **55**:103 (1959).
8. Y. Heled and A. Orell, *Int. J. Heat Mass Transfer*, **10**:553 (1967).
9. R. F. Gaertner and J. W. Westwater, *Chem. Eng. Progr. Symp. Ser.*, **56**:39 (1960).
10. C. Wei and G. W. Preckshot, *Chem. Eng. Science*, **19**:838 (1964).
11. C. Corty and A. S. Foust, *Chem. Eng. Progr. Symp. Ser.*, **51**:1 (1955).
12. H. M. Kurihara and J. E. Myers, *AIChE J.*, **6**:83 (1960).
13. K. K. Nangia and W. Y. Chon, *AIChE J.*, **13**:872 (1967).
14. W. M. Rohsenow and P. Griffith, *Chem. Eng. Progr. Symp. Ser.*, **52**:47 (1956).
15. S. S. Kutateladze, *Izv. Akad. Nauk SSSR OTD Tekh. Nauk*, **2**(4):342 (1951).
16. N. Zuber, *Trans. ASME*, **80**:711 (1958).
17. M. T. Cichelli and C. F. Bonilla, *Trans. AIChE*, **41**:755 (1945).
18. J. H. Lienhard and V. E. Schrock, *J. Heat Transfer*, **85**:261 (1963).
19. C. B. Cobb and E. L. Park, *Chem. Eng. Progr. Symp. Ser.*, **65**:188 (1969).
20. S. I. Tang and Z. Rotern, *Can. J. Chem. Eng.*, **43**:355 (1965).
21. C. J. Rallis and H. H. Jawurek, *Int. J. Heat Mass Transfer*, **7**:1051 (1964).
22. S. J. Van Stralen, *Br. Chem. Eng.*, **6**:834 (1961).
23. N. Zuber, *Appl. Mech. Rev.*, **17**:655 (1965).
24. A. Orell, *Int. J. Mass Heat Transfer*, **10**:967 (1967).
25. P. G. Kosky, Ph.D. Dissertation, University of California, Berkeley, Calif. (1965).
26. L. S. Sterman and Y. U. Vilemas, *Int. J. Heat Mass Transfer*, **11**:347 (1968).
27. D. N. Lyon, P. G. Kosky, and B. N. Hartman, in: *Advances in Cryogenic Engineering, Vol. 9*, Plenum Press, New York (1963), p. 77.


## DISCUSSION

*Question* by R. F. Barron, Louisiana Polytechnic Institute: In determining the peak nucleate heat flux, did you make runs in which this point was approached from the film-boiling region (i.e., by decreasing the heater temperature)? If so, was the S-shaped curve obtained in the decreasing-temperature runs?

*Answer* by author: No, the peak nucleate heat flux was not approached from the film-boiling region. Because of the instability of the unstable film-boiling region it is impossible to approach the peak nucleate heat flux from the film side.

*Question* by K. J. Baumeister, NASA Lewis Research Center: Can the correlation for $(Q/A)_{max}$ be used for ordinary fluids like water, benzene, etc.?

*Answer* by author: The correlation was derived for fluids which follow the law of corresponding states (A, $N_2$, $O_2$, CO, Kr, Xe, etc.). Therefore, it should be restricted to these fluids. It is felt that if a third parameter, say $Z_c$, were introduced into the correlation it would be valid over a wide range of fluids.

*Question* by K. J. Baumeister, NASA Lewis Research Center: Why did you normalize equation (4) at $P_r = 0.1$? Could another value of $P_r$ be used?

*Answer* by author: A reduced pressure of 0.1 was picked because there was an abundance of reliable data at this point; therefore, the reference value could be determined accurately. Any value of reduced pressure could have been used as the reference value. Other values for the reference reduced pressure gave similar correlations.

TR
LI
S

The following s
periodic step in Jo
liquid nitrogen at a
influence of heat-gen
departure from nucl
conditions are analy
time for several pow
are compared with t

Previous studies
transfer, transient b
have obtained exper
cryogenic fluids. NAS
data available prior t
Bewilogua *et al.* [3] a

A variety of transi
primarily with water
transient boiling as a
and Miller [8] and I
Houchin and Lienha
effects associated w
transient pool boili
tion.

The latest in a
presented by Mikic a
relating to the mec
correlation.

# QUANTUM 735TDR & NPR735

## Dimensional Drawing

*All dimensions are reference and nominal.*

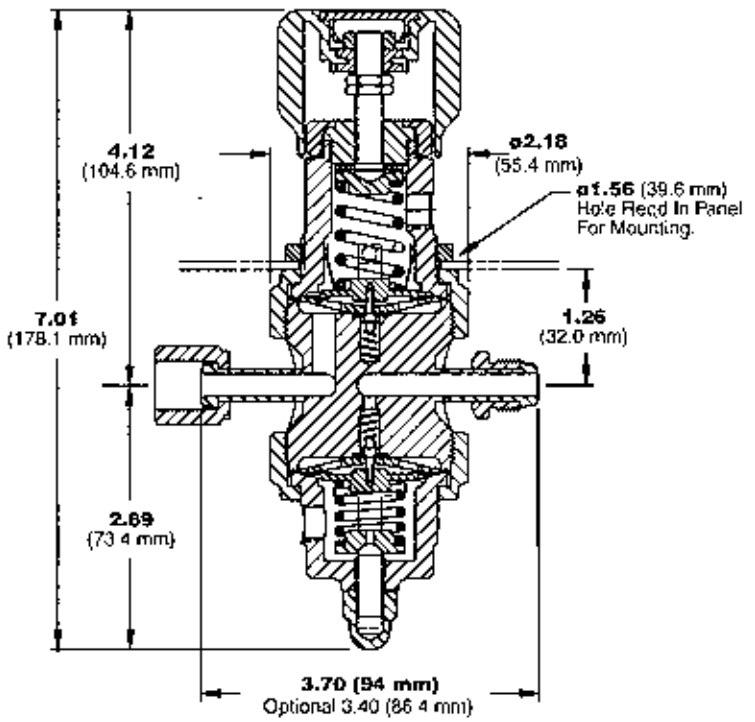


## Flow Curves

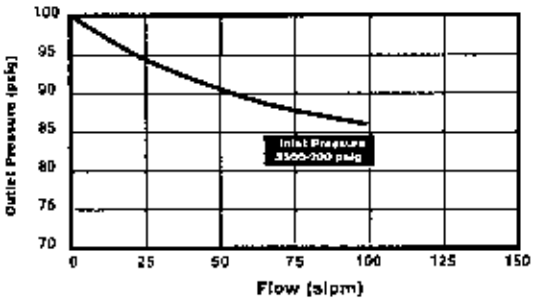


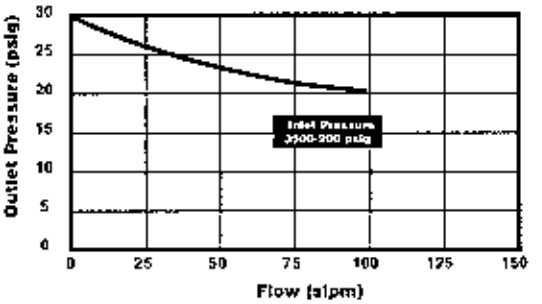


These curves were performed using nitrogen at ambient conditions.

## Ordering Information

**73530 W 4P V3 10 FS MMMM PM**

**BASIC SERIES**
73530 = 0-30 psig
735100 = 0-100 psig
NPR73530 = -25 in Hg-0-30 psig

**MATERIALS**
W = Welded 316L Stainless Steel
H = Hastelloy C-22® *

**PORTING**
2P = 2 Ports
3P = 3 Ports
4P = 4 Ports
5P = 5 Ports
7P = 7 Ports

**REGULATOR OUTLET GAUGE**
V3 = -30 in Hg-0-30 psig
L = -30 in Hg-0-60 psig
V1 = -30 in Hg-0-100 psig
X = No Gauge

**OPTIONAL FEATURES**
PM = Panel Mount
TH = Hastelloy C-22® Trim**
VESP = Vespel® Seat
(Recommended for Nitrous Oxide - $N_2O$ Service)
3.4 = FS Fittings 3.4" Face to Face

**PORT CONFIGURATION**
M = Male
F = Female
I = Internal Female Face Seat

**PORT STYLE**
FS = 1/4" Face Seal
TS = Tube Stubs

**REGULATOR INLET GAUGE**
10 = 0-1000 psig
20 = 0-2000 psig
30 = 0-3000 psig
40 = 0-4000 psig
X = No Gauge

* Includes body, diaphragm, compression member, poppet, and spring.
** Includes diaphragm compression member, poppet, and spring.

Hastelloy® C-22 is a registered trademark of Haynes International, Inc.
Vespel® is a registered trademark of DuPont Company.
Inconel® is a registered trademark of Inco Alloys International.

## Porting Configurations

Porting Code
4P

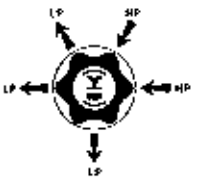


Porting Code
5P

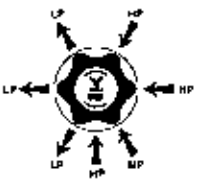


Porting Code
7P

Parker Instrumentation

# UNION CARBIDE MOLECULAR SIEVES

# FIXED-BED PRESSURE DROP CALCULATIONS

UNION CARBIDE ADSORBENTS & CATALYSTS

## WORKING EQUATION

The Ergun equation[a] for the calculation of pressure drop in adsorbent beds is in good agreement with numerous pressure drop measurements made in Union Carbide laboratories and on commercial adsorption units *for both gas phase and liquid phase operation.*

Use the following modified form of the equation to calculate pressure drop through Molecular Sieve beds:

$$\frac{\Delta P}{L} = \frac{f_t C_t G^2}{\rho D_p}$$

where:

- $C_t$ = pressure drop coefficient (ft) (sq hr)/(sq in)
- $D_p$ = effective particle diameter[b], ft.
- $f_t$ = friction factor
- $G$ = superficial mass velocity, lb/(hr) (sq ft)
- $L$ = distance from bed entrance, ft. (bed depth)
- $\Delta P$ = pressure drop, psi
- $\rho$ = fluid density, lb/cu ft.

$\Delta P/L$ is the pressure drop per unit length of bed in psi/ft.

The friction factor, $f_t$ is determined from the accompanying graph (page 3) which has $f_t$ plotted as a function of modified Reynold's number.

Modified Re = $D_p G/\mu$

$\mu$ = fluid viscosity, lb/(hr) (ft)
[multiply centipoise by 2.42 to obtain lb/(hr) (ft)]

The pressure drop coefficient, $C_t$, is determined from the graph (page 3) which has $C_t$ plotted as a function of external void fraction, $\epsilon$.

The suggested values for $\epsilon$ and $D_p$ for various sizes of LINDE Molecular Sieve are:

| | $\epsilon$ | $D_p$ |
|---|---|---|
| 1/8-inch pellets | 0.37 | 0.0122 ft. |
| 1/16-inch pellets | 0.37 | 0.0061 ft. |
| 14x30 mesh granules | 0.37 | 0.0033 ft. |

(a) Ergun, S., Chem Engr Prog, *48*, 78 (1952)

(b) $D_p = \frac{D_c}{(2/3) + (1/3)(D_c/L_c)}$ where $D_c$ is the particle diameter and $L_c$ is the particle length

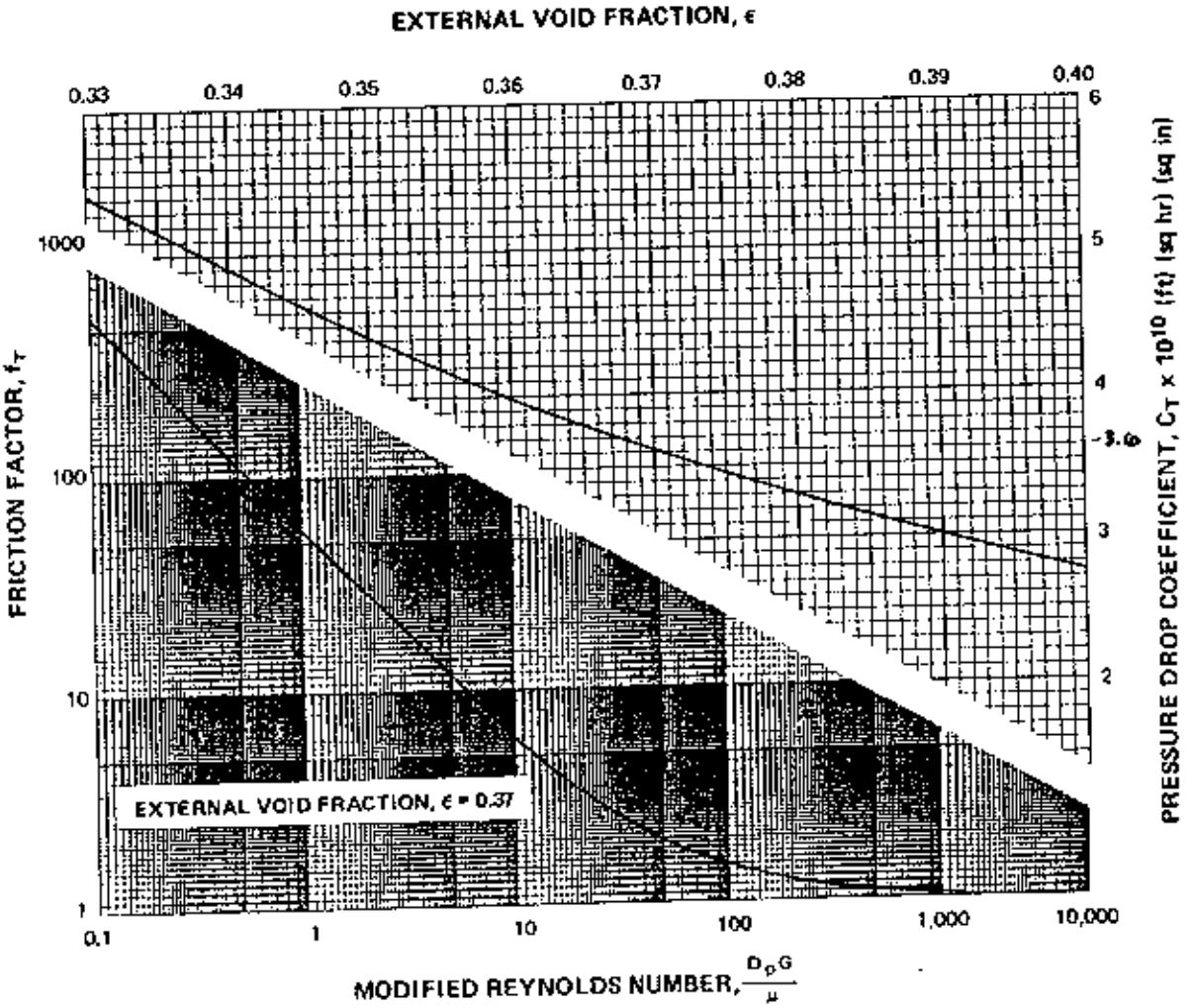


## EXAMPLE

Determine the pressure drop through an 8 ft. diameter by 10 ft. deep bed of LINDE Molecular Sieve 1/16-inch pellets drying 55 MMSCFD of gas at 50°F and 420 psig. The gas has a molecular weight of 25, a viscosity of 0.010 cp, and a density of 2.0 lb/cu.ft. at operating conditions.

$$G = \frac{55 \times 10^6 \text{ SCFD}}{24 \text{ hrs/day}} \; \frac{25 \text{ lbs/mol}}{379 \text{ SCF/mol}} \; \frac{1}{\pi\,(8)^2/4 \text{ sq. ft.}} = 3000 \text{ lb/(hr) (sq.ft.)}$$

$$\text{Modified Re} = D_p G/\mu = \frac{(0.0061)\,(3000)}{(2.42)\,(0.010)} = 756$$

$f_t$ (from figure) = 1.07

$C_t$ (from figure for $\epsilon$ of 0.37) = $3.6 \times 10^{-10}$

$$\frac{\Delta P}{L} = \frac{(1.07)\,(3.6)\,(3000)^2\,(10^{-10})}{(2.0)\,(0.0061)} = \underline{0.28} \text{ psi/ft.}$$

For a bed depth of 10 ft.

$$\Delta P = (0.28)\,(10) = \underline{2.8} \text{ psi}$$

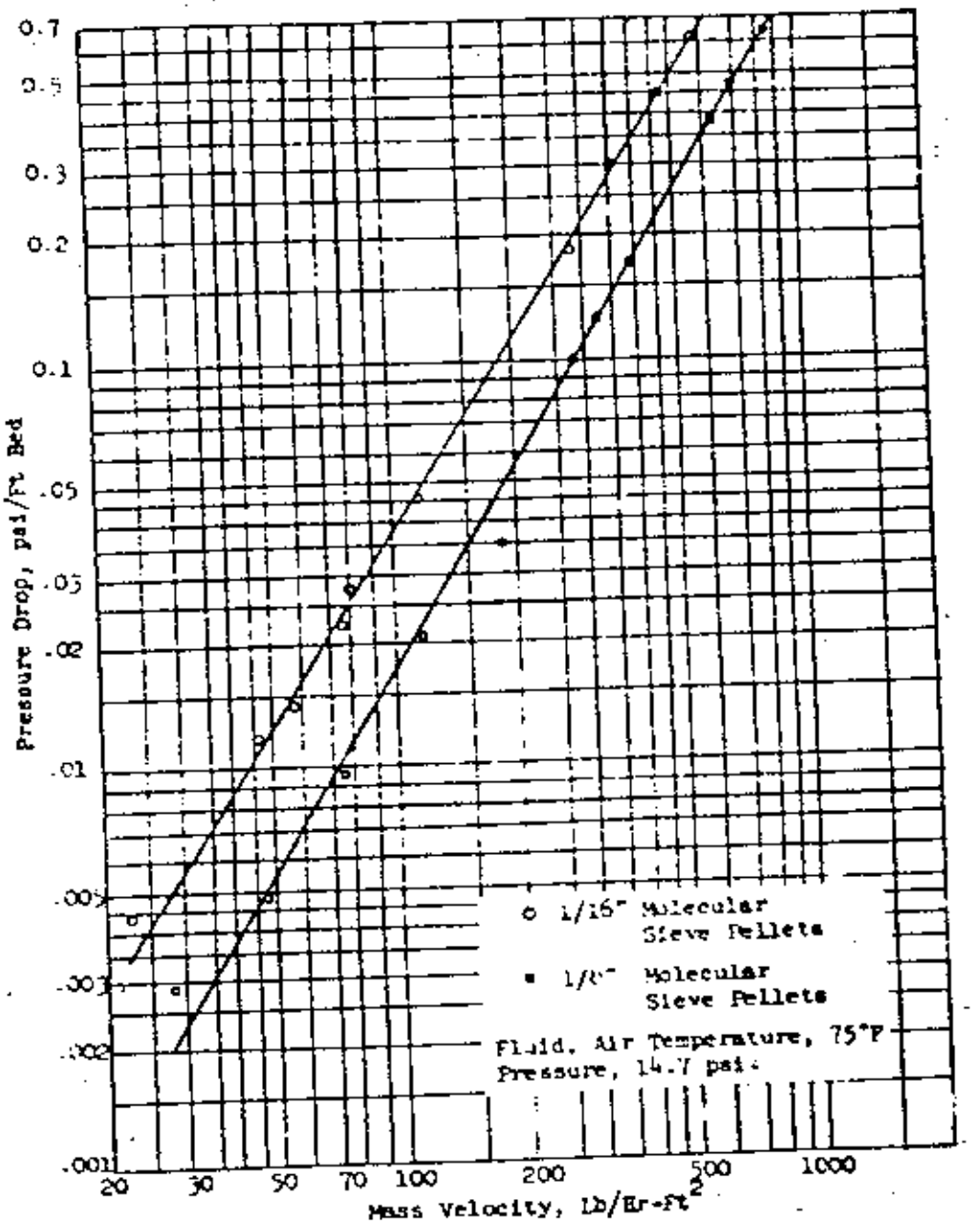


FIGURE 191

PRESSURE DROP THROUGH PACKED COLUMNS
6 INCHES OR MORE IN DIAMETER
(COURTESY OF THE LINDE CO.)

fig 1

# QUANTUM 735TDR & NPR735

## Two Stage Tied Diaphragm Regulator

VERIFLO
ISO 9001 Certified

Parker Hannifin Corporation's Veriflo Division presents the 735TDR. The two stage, tied-diaphragm regulator is designed to provide constant outlet pressure regardless of inlet pressure fluctuations.

Subatmospheric pressure control available with the NPR735.

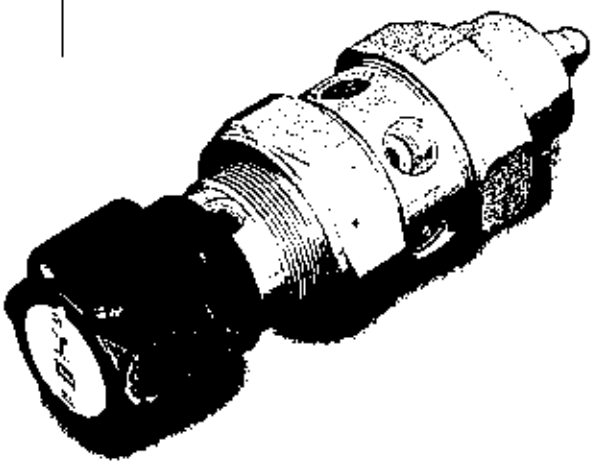

## features

- "VeriClean", Veriflo's custom low sulfur, high purity 316L Stainless Steel™ enhances electropolishing, welding and corrosion resistance.
- Tied diaphragm for added safety.
- Adjustment range spring may be replaced without breaking diaphragm seal to body and exposing the wetted area to contamination.
- Unique patented compression member loads seal to body without requiring a threaded nozzle or additional seals to atmosphere.
- Metal-to-metal diaphragm-to-body seal assures high leak integrity.
- 100% Helium leak tested.
- Hurricane cleaning, optional proprietary cleaning process, removes metallic ions, organic films and surface adhering particles.

## materials of construction

**Wetted**

Body . . "VeriClean", Veriflo's custom high purity type 316L Stainless Steel™, Hastelloy C-22®
Seal . . . . . PCTFE, optional Vespel®
Diaphragm . . . . . 316L Stainless Steel
Poppet . . . . . 316L Stainless Steel
Poppet Spring . . . . . 316L Stainless Steel
Compression Member . . . . . 316L Stainless Steel
Filter . . . . . Hastelloy C-22®

**Non-Wetted**

Nut . . . . . 316L Stainless Steel
Cap . . . . . Nickel plated Brass

## operating conditions

Maximum inlet . . . . . 3,500 psig (240 bar)
Outlet . . . . . 0 to 30 psig (2 bar) adjustable
0 to 100 psig (7 bar) adjustable

NPR . . . . . -25 in Hg to 30 psig

Temperature . . . . -40°F to 150°F (-40°C to 65°C)

## functional performance

Flow capacity . . . . . $C_V$ = .04
(SEMI Flow Coefficient Test # F-32-0998)

Design Leak Rate
Outboard . . . . . 1 x $10^{-9}$ scc/sec He
Inboard . . . . . 2 x $10^{-6}$ scc/sec He
Across seat . . . . . less than 2 x $10^{-7}$ scc/sec He
Supply pressure effect . . . . . 0.2 psi (.01 bar) per 100 psi (6.8 bar). See flow curves

## standard configurations

Any configuration of FS male and/or female fittings.
Gland to gland length . . . . . 3.70 (94 mm)
Optional . . . . . 3.40 (86.4 mm)

¼ inch female pipe threads. Other configurations available as options, including as many as seven ports

## internal volume

10.10 cc

## surface finishes

Standard Ra . . . . . 15-20 micro inch (.381 to .508 micro meter) or less
Optional Ra . . . . . 10 micro inch (.254 micro meter) or less
5 micro inch (.127 micro meter) or less

## approximate weight

3.5 lbs (1.6 kg)

Parker Instrumentation

## 4.1b - Relief Valve Sizing for piping associated with the FLARE Materials Test Station Cryostat

### PSV-101-N2

PSV-101-N2 is a trapped volume relief on the LN2 transfer line inside PAB. PSV-101-N2 has a 100 psig set point which is higher than the 75 psig set point of the liquid nitrogen supply dewar relief. Thus the section of piping PSV-101-N2 protects cannot be pressurized by any operational condition except heat input into a trapped volume. PSV-101-N2 is sized to relieve the potential trapped volume between MV-120-N, EV-106-N2, and EV-105-N2. This is approximately 25 ft. of ½ in. diameter stainless steel tube vacuum jacketed by 1.5 in. SCH 10 stainless steel pipe. To size the trapped volume relief, half of the pipe is assumed to be engulfed in fire. For the calculations it is assumed that the vacuum space is filled with air. The vacuum jacket pipe wall temperature is set to the fire temperature of 1200 $^{o}$F and the inner tube wall temperature is set at 101.6 K which is the liquid nitrogen saturation temperature at 110% of the 100 psig relief valve set point. Both radiation exchange between the concentric tubes and conduction thru the air gap provide heat input to vaporize the LN2 as shown in Figure 1. It is assumed that the LN2 vents as a room temperature gas.

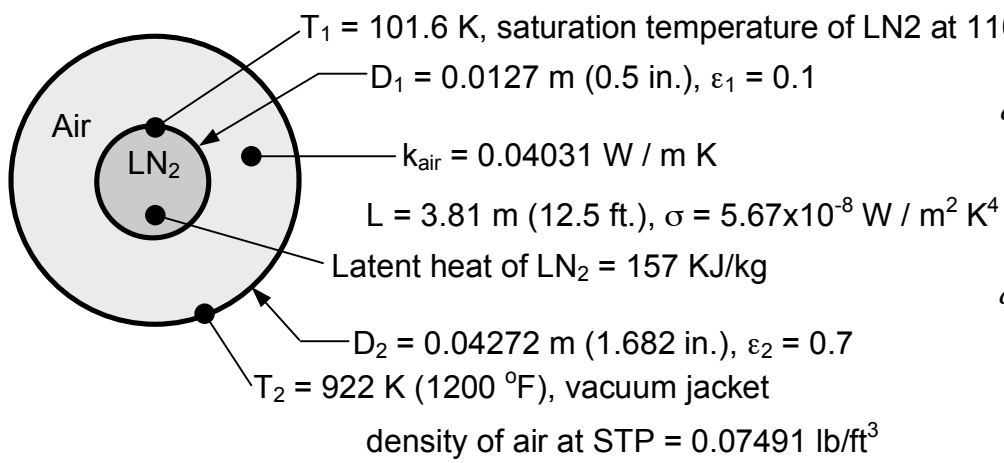


$$q_{radiation} = \frac{\sigma(\pi D_1 L)(T_1^4 - T_2^4)}{\frac{1}{\varepsilon_1} + \frac{1-\varepsilon_2}{\varepsilon_2}\left(\frac{D_1}{D_2}\right)}$$

$$q_{conduction} = \frac{2\pi L k_{air}(T_1 - T_2)}{\ln\left(\frac{D_2/2}{D_1/2}\right)}$$

$$q_{total} = q_{radiation} + q_{conduction}$$

$$SCFM_{air} = q_{total}\frac{J}{\sec} \times \frac{1}{latent\ heat}\frac{kg}{J} \times \frac{2.205}{1}\frac{lb}{kg} \times \frac{60}{1}\frac{\sec}{\min} \times \frac{1}{density@STP}\frac{ft^3}{lb}$$

Figure 1: Heat transfer equations for trapped volume relief sizing

The total heat input into the liquid nitrogen is

$$q_{total} = \frac{5.67\times10^{-8}\frac{W}{m^2\cdot K^4}(\pi\times0.0127m\times3.81m)(101.6^4-922^4)K^4}{\frac{1}{0.1}+\frac{1-0.7}{0.7}\left(\frac{0.0127m}{0.04272m}\right)} + \frac{2\pi\times3.81m\times0.04031\frac{W}{m\cdot K}(101.6-922)K}{\ln\left(\frac{\frac{0.04272m}{2}}{\frac{0.0127m}{2}}\right)} = 1267W = 1267\frac{J}{\sec}.$$

If the density of air is assumed to equal that of nitrogen, then the volumetric flow rate is

$$SCFM_{air} = 1267\frac{J}{\sec} \times \frac{1}{156966}\frac{kg}{J} \times \frac{2.205}{1}\frac{lb}{kg} \times \frac{60}{1}\frac{\sec}{\min} \times \frac{1}{0.07491}\frac{ft^3}{lb} = 14.24\frac{ft^3}{\min}.$$

The capacity of this Circle Seal 5100 series 2MP relief at 10% overpressure for its 100 psig set point is 25 SCFM which is adequate for this case.

**PSV-117-N2**

PSV-117-N2 is a relief attached to the outlet of MV-119-N. MV-119-N is a branch isolation valve for future expansion of the LN2 transfer line. PSV-117-N2 is in place to prevent the unlikely event that a small liquid leak thru MV-119-N could result in vapor generated at a rate that could not escape back thru the liquid leak path. The 25 SCFM capacity of this Circle Seal 5100 series 2MP relief set at 100 psig should be adequate for this unlikely scenario.

**PSV-118-N2**

PSV-118-N2 is a trapped volume relief on the LN2 transfer line. PSV-118-N2 has a 100 psig set point which is higher than the 75 psig set points of the liquid nitrogen dewar reliefs. Thus PSV-101-N2 must be sized to relieve a potential trapped volume between MV-100-N, MV-119-N, and MV-120-N – not for any operational condition. CV-100-N has a tiny hole thru the center which allows the trapped volume to extend to MV-100-N. This is approximately 40 ft. of vacuum jacketed ½ in. diameter stainless steel tube. The section of pipe protected is both inside and outside PAB. To size the trapped volume relief, half of the pipe is assumed to be engulfed in fire using the method outlined in Figure 1 with a piping length of 6.096 m instead of 3.81 m.

The total heat input into the liquid nitrogen is

$$q_{total} = \frac{5.67\times10^{-8}\frac{W}{m^2\cdot K^4}(\pi\times0.0127m\times6.096m)\left(101.6^4-922^4\right)K^4}{\frac{1}{0.1}+\frac{1-0.7}{0.7}\left(\frac{0.0127m}{0.04272m}\right)} + \frac{2\pi\times6.096m\times0.04031\frac{W}{m\cdot K}(101.6-922)K}{\ln\left(\frac{\frac{0.04272m}{2}}{\frac{0.0127m}{2}}\right)} = 2028W = 2028\frac{J}{\sec}.$$

If the density of air is assumed to equal that of nitrogen, then the volumetric flow rate is

$$SCFM_{air} = 2028\frac{J}{\sec}\times\frac{1}{156966}\frac{kg}{J}\times\frac{2.205}{1}\frac{lb}{kg}\times\frac{60}{1}\frac{\sec}{\min}\times\frac{1}{0.07491}\frac{ft^3}{lb} = 22.79\frac{ft^3}{\min}.$$

For PSV-118-N2, the required relief capacity was computed to be 22.79 SCFM. The capacity of this Circle Seal 5100 series 2MP relief at 10% overpressure for a 100 psig set point is 25 SCFM which is adequate for this case.

**PSV-203-Ar**

PSV-203-Ar is a trapped volume relief on the LAr source manifold. PSV-203-Ar has a 400 psig set point which is higher than the 350 psig set points of the FNAL stockroom high pressure 160 liter liquid argon dewars that supply the system. Thus PSV-203-Ar is sized to relieve a potential trapped volume between MV-204-Ar and MV-213-Ar, not for any

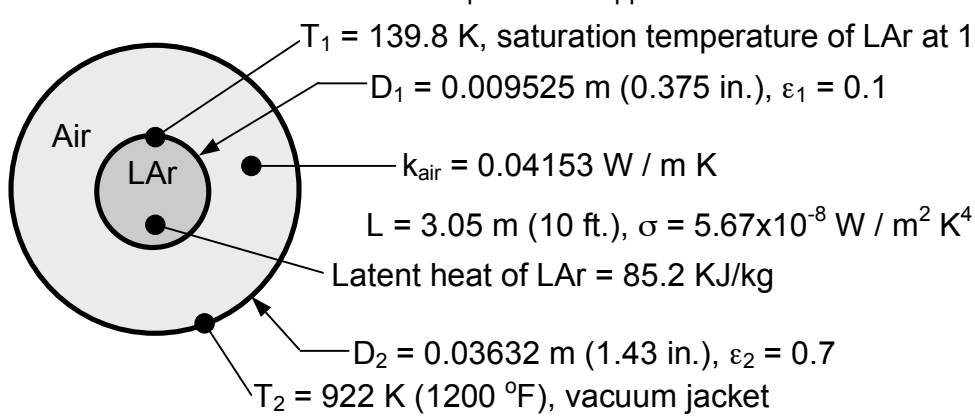


$$q_{radiation} = \frac{\sigma(\pi D_1 L)\left(T_1^4 - T_2^4\right)}{\frac{1}{\varepsilon_1}+\frac{1-\varepsilon_2}{\varepsilon_2}\left(\frac{D_1}{D_2}\right)}$$

$$q_{conduction} = \frac{2\pi L k_{air}(T_1 - T_2)}{\ln\left(\frac{D_2/2}{D_1/2}\right)}$$

$$q_{total} = q_{radiation} + q_{conduction}$$

Figure 2: Heat transfer equations for trapped volume relief sizing for PSV-203-Ar

operational condition. This is approximately 10 ft. of 3/8 in. diameter stainless steel tube surrounded by a 1.5 inch tube vacuum jacket. To size the trapped volume relief, this short pipe is assumed to be engulfed in fire using the method outlined in Figure 2.

The total heat input into the liquid argon is

$$q_{total} = \frac{5.67\times10^{-8}\frac{W}{m^2\cdot K^4}(\pi\times0.009525m\times3.048m)\left(139.8^4-922^4\right)K^4}{\frac{1}{0.1}+\frac{1-0.7}{0.7}\left(\frac{0.009525m}{0.03632m}\right)} + \frac{2\pi\times3.048m\times0.04153\frac{W}{m\cdot K}(139.8-922)K}{\ln\left(\frac{\frac{0.03632m}{2}}{\frac{0.009525m}{2}}\right)} = 834W = 834\frac{J}{\sec}.$$

The argon mass flow rate, $W_{Ar}$, must be converted into an equivalent volumetric flow rate for Air to compare to the manufacturer's tabulated relief valve capacity.

$$W_{Ar} = q_{total}\times\frac{1}{latent\ heat_{Ar}} = 834\frac{J}{\sec}\times\frac{1}{85166}\frac{kg}{J}\times\frac{2.205}{1}\frac{lb}{kg}\times\frac{3600}{1}\frac{\sec}{hr} = 77.74\frac{lb}{hr}.$$

ASME Section VIII Appendix 11 contains a method to convert relief valve capacity from one vapor to another that utilizes the following equations for this case

$W_{Ar} = C_{Ar}(KAP)\sqrt{\frac{M_{Ar}}{T_{Ar}}}$ and $W_{Air} = C_{Air}(KAP)\sqrt{\frac{M_{Air}}{T_{Air}}}$ where

$W_{Ar}$ = mass flow rate of argon, 77.74 lb/hr

$W_{Air}$ = mass flow rate of air, to be solved for

$C_{Ar}$ = constant based on the specific heats of argon, 378

$C_{Air}$ = constant based on the specific heats of air, 356

*KAP* = set of factors specific to the relief valve, to be solved for

$M_{Ar}$ = molecular weight of argon, 39.9

$M_{Air}$ = molecular weight of air, 28.9

$T_{Ar}$ = temperature of argon being relieved, 520 $^{o}$R.

$T_{Air}$ = temperature of air being relieved, 520 $^{o}$R.

Solving for KAP yields $(KAP) = \frac{W_{Ar}}{C_{Ar}\sqrt{\frac{M_{Ar}}{T_{Ar}}}} = \frac{77.74}{378\sqrt{\frac{39.9}{520}}} = 0.7424$. The equivalent mass flow rate of air is

then computed as $W_{Air} = 356(0.7424)\sqrt{\frac{28.9}{520}} = 62.31\frac{lb}{hr}$. To convert the air mass flow rate into SCFM, the mass flow rate is divided by the density of air at STP.

$$SCFM_{air} = \frac{62.31}{1}\frac{lb}{hr} \times \frac{1}{60}\frac{hr}{\min}\frac{1}{0.07491}\frac{ft^3}{lb} = 13.86\frac{ft^3}{\min}.$$

PSV-203-Ar is a Circle Seal 5100-4MP which has a capacity of 270 SCFM at 10% over pressure beyond its 400 psig cracking pressure which is adequate for this case.

**PSV-219-Ar**

PSV-219-Ar is a trapped volume relief that protects the piping between MV-213-Ar and MV-217-Ar. Most of this section of piping is inside the inner vessel of a cryostat designed to hold helium. During normal operation both the inner vessel and the insulating vacuum space are under vacuum. This section of piping contains a molecular sieve filter that is wrapped with heating tape for regeneration purposes. The heating tape has a total power of 1,000 W. The piping in the cryostat is protected from fire by the stainless steel inner vessel wall and the vacuum jacket wall. The piping section is relatively small compared to the space available in the cryostat. Even if the vacuum failed in both spaces during a fire, heat input into the piping would be much slower than calculated for the more typical vacuum jacketed piping associated with relief valves such as PSV-101-N2**.** Thus it seems reasonable to size PSV-219-Ar for a heater malfunction.

The argon mass flow rate, $W_{Ar}$, must be calculated from the heat input and then converted into an equivalent volumetric flow rate for Air to compare to the manufacturer's tabulated relief valve capacity as it was for PSV-203-Ar.

$$W_{Ar} = q_{total} \times \frac{1}{latent\ heat_{Ar}} = 1000\frac{J}{\sec} \times \frac{1}{85166}\frac{kg}{J} \times \frac{2.205}{1}\frac{lb}{kg} \times \frac{3600}{1}\frac{\sec}{hr} = 93.21\frac{lb}{hr}.$$

Solving for KAP yields $(KAP) = \frac{W_{Ar}}{C_{Ar}\sqrt{\frac{M_{Ar}}{T_{Ar}}}} = \frac{93.21}{378\sqrt{\frac{39.9}{520}}} = 0.8902$. The equivalent mass flow rate of air is

then computed as $W_{Air} = 356(0.8902)\sqrt{\frac{28.9}{520}} = 74.71\frac{lb}{hr}$. To convert the air mass flow rate into SCFM, the mass flow

rate is divided by the density of air at STP.

$$SCFM_{air} = \frac{74.71}{1}\frac{lb}{hr} \times \frac{1}{60}\frac{hr}{\min}\frac{1}{0.07491}\frac{ft^3}{lb} = 16.62\frac{ft^3}{\min}.$$

PSV-219-Ar is a Circle Seal 5100-2MP which has a capacity of 80 SCFM at 10% over pressure beyond its 400 psig cracking pressure which is adequate for this case.

**PSV-249-Ar**

PSV-249-Ar is a trapped volume relief that protects the section of the LAr transfer line between MV-208-Ar and MV-217-Ar. MV-202-Ar is not accessible when the system is cold. MV-202-Ar is only used to isolate the filter if it is removed from the piping and cryostat that provides its insulating vacuum. PSV-219-Ar is set to relieve at 400 psig which is above the 350 psig set point of the argon supply dewars. Thus PSV-219-Ar is sized to relieve heat input into a trapped volume. This section of piping includes an oxygen filter wrapped with a 1000 W heating tape for filter regeneration and a 250 W regeneration gas pre-heater. The tubing consists of about 12 feet of 3/8 in. tube surrounded by a 4 inch vacuum jacket. Figure 3 details the parameters for calculating heat input into the piping during a fire.

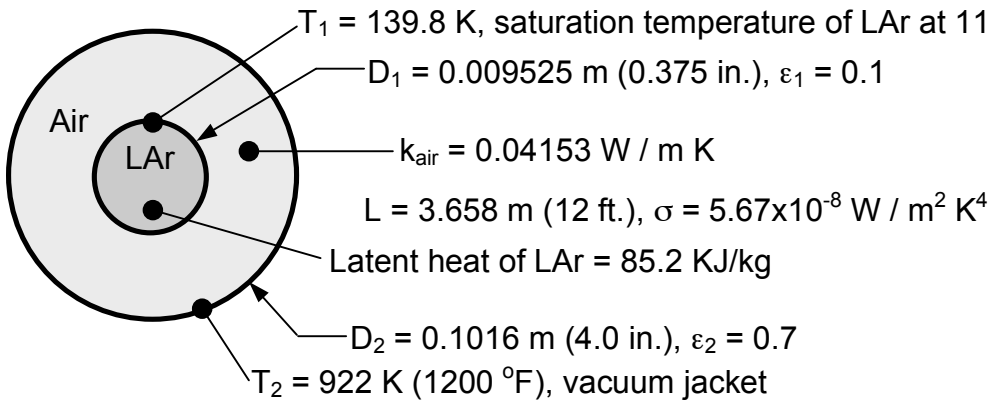


$$q_{radiation} = \frac{\sigma(\pi D_1 L)(T_1^4 - T_2^4)}{\frac{1}{\varepsilon_1} + \frac{1-\varepsilon_2}{\varepsilon_2}\left(\frac{D_1}{D_2}\right)}$$

$$q_{conduction} = \frac{2\pi L k_{air}(T_1 - T_2)}{\ln\left(\frac{D_2/2}{D_1/2}\right)}$$

$$q_{total} = q_{radiation} + q_{conduction}$$

Figure 3: Heat transfer equations for trapped volume relief sizing for PSV-249-Ar

The heat input due to fire is

$$q_{total} = \frac{5.67\times10^{-8}\frac{W}{m^2\cdot K^4}(\pi\times0.009525m\times3.658m)(139.8^4-922^4)K^4}{\frac{1}{0.1}+\frac{1-0.7}{0.7}\left(\frac{0.009525m}{0.1016m}\right)} + \frac{2\pi\times3.658m\times0.04153\frac{W}{m\cdot K}(139.8-922)K}{\ln\left(\frac{\frac{0.1016m}{2}}{\frac{0.009525m}{2}}\right)} = 762W = 762\frac{J}{\sec}.$$

If the 1250 W of heater capacity is added to the fire heat input, the total heat input is 2012 W. The argon mass flow rate, $W_{Ar}$, must be calculated from the heat input and then converted into an equivalent volumetric flow rate for Air to compare to the manufacturer's tabulated relief valve capacity.

$$W_{Ar} = q_{total}\times\frac{1}{latent\ heat_{Ar}} = 2012\frac{J}{\sec}\times\frac{1}{85166}\frac{kg}{J}\times\frac{2.205}{1}\frac{lb}{kg}\times\frac{3600}{1}\frac{\sec}{hr} = 187.53\frac{lb}{hr}.$$

Solving for KAP yields $(KAP) = \frac{W_{Ar}}{C_{Ar}\sqrt{\frac{M_{Ar}}{T_{Ar}}}} = \frac{187.53}{378\sqrt{\frac{39.9}{520}}} = 1.791$. The equivalent mass flow rate of air is

then computed as $W_{Air} = 356(1.791)\sqrt{\frac{28.9}{520}} = 150.31\frac{lb}{hr}$. To convert the air mass flow rate into SCFM, the mass flow rate is divided by the density of air at STP.

$$SCFM_{air} = \frac{150.31}{1}\frac{lb}{hr}\times\frac{1}{60}\frac{hr}{\min}\frac{1}{0.07491}\frac{ft^3}{lb} = 33.44\frac{ft^3}{\min}.$$

PSV-249-Ar is a Circle Seal 5100-2MP which has a capacity of 80 SCFM at 10% over pressure beyond its 400 psig cracking pressure which is adequate for this case.

**PSV-250-Ar**

PSV-250-Ar is a trapped volume relief that protects the section of the LAr transfer line between MV-208-Ar and MV-244-Ar. PSV-250-Ar is set to relieve at 400 psig which is above the 350 psig set point of the argon supply dewars. Thus PSV-250-Ar is sized to relieve heat input into a trapped volume. The tubing consists of about 10 feet of 3/8 in. tube surrounded by a 4 inch vacuum jacket. Figure 3 details the parameters for calculating heat input into the piping during a fire except that the piping is a bit shorter at 10 feet in length.

The heat input due to fire is

$$q_{total} = \frac{5.67\times10^{-8}\frac{W}{m^2\cdot K^4}(\pi\times0.009525m\times3.048m)\left(139.8^4-922^4\right)K^4}{\frac{1}{0.1}+\frac{1-0.7}{0.7}\left(\frac{0.009525m}{0.1016m}\right)} + \frac{2\pi\times3.048m\times0.04153\frac{W}{m\cdot K}(139.8-922)K}{\ln\left(\frac{\frac{0.1016m}{2}}{\frac{0.009525m}{2}}\right)} = 635W = 635\frac{J}{\sec}.$$

The argon mass flow rate, $W_{Ar}$, must be calculated from the heat input and then converted into an equivalent volumetric flow rate for Air to compare to the manufacturer's tabulated relief valve capacity.

$$W_{Ar} = q_{total}\times\frac{1}{latent\ heat_{Ar}} = 635\frac{J}{\sec}\times\frac{1}{85166}\frac{kg}{J}\times\frac{2.205}{1}\frac{lb}{kg}\times\frac{3600}{1}\frac{\sec}{hr} = 59.19\frac{lb}{hr}.$$

Solving for KAP yields $(KAP) = \frac{W_{Ar}}{C_{Ar}\sqrt{\frac{M_{Ar}}{T_{Ar}}}} = \frac{59.19}{378\sqrt{\frac{39.9}{520}}} = 0.565$. The equivalent mass flow rate of air is

then computed as $W_{Air} = 356(0.565)\sqrt{\frac{28.9}{520}} = 47.42\frac{lb}{hr}$. To convert the air mass flow rate into SCFM, the mass flow

rate is divided by the density of air at STP.

$$SCFM_{air} = \frac{47.42}{1}\frac{lb}{hr}\times\frac{1}{60}\frac{hr}{\min}\frac{1}{0.07491}\frac{ft^3}{lb} = 10.55\frac{ft^3}{\min}.$$

PSV-250-Ar is a Circle Seal 5100-2MP which has a capacity of 80 SCFM at 10% over pressure beyond its 400 psig cracking pressure which is adequate for this case.

**PSV-156-Ar**

PSV-156-Ar is a trapped volume relief that protects the vapor pump in Luke in the event that it is isolated from the cryostat. The 45 psig set point was chosen to protect the bellows in the cold valve EP-308-Ar. PSV-156-Ar is sized to vent the vapor that could be generated by the two heaters inside the vapor pump. Combined, these two heaters can provide 1750 W of heat input into LAr.

The argon mass flow rate, $W_{Ar}$, must be calculated from the heat input and then converted into an equivalent volumetric flow rate for Air to compare to the manufacturer's tabulated relief valve capacity.

$$W_{Ar} = q_{total}\times\frac{1}{latent\ heat_{Ar}} = 1750\frac{J}{\sec}\times\frac{1}{85166}\frac{kg}{J}\times\frac{2.205}{1}\frac{lb}{kg}\times\frac{3600}{1}\frac{\sec}{hr} = 163.11\frac{lb}{hr}.$$

Solving for KAP yields $(KAP) = \frac{W_{Ar}}{C_{Ar}\sqrt{\frac{M_{Ar}}{T_{Ar}}}} = \frac{163.11}{378\sqrt{\frac{39.9}{520}}} = 1.558$. The equivalent mass flow rate of air is

then computed as $W_{Air} = 356(1.558)\sqrt{\frac{28.9}{520}} = 130.76\frac{lb}{hr}$. To convert the air mass flow rate into SCFM, the mass flow rate is divided by the density of air at STP.

$$SCFM_{air} = \frac{130.76}{1}\frac{lb}{hr} \times \frac{1}{60}\frac{hr}{\min}\frac{1}{0.07491}\frac{ft^3}{lb} = 29.09\frac{ft^3}{\min}.$$

PSV-156-Ar is a Circle Seal 5100-4MP which has a capacity of 37 SCFM at 10% over pressure beyond its 45 psig cracking pressure which is adequate for this case.

**SV-96-N**

SV-96-N relieves a potential trapped volume between RV-036-N and MV-096-N. These valves are located outside PAB on the liquid nitrogen dewar pressure building loop. This section of piping is 14 inches of ½" SCH 10 SS pipe.

CGA Standard 1.3 paragraph 5.3.2 gives an equation for the minimum required total capacity of the pressure relief devices at a flow rating pressure of 121 percent of the MAWP of an uninsulated cryogenic container exposed to fire:

$$Q_a = FG_u A^{0.82}$$

where

$Q_a$ = Flow capacity of the relief device required in cubic feet per minute of free air.

$F$ = Correction factor, = 1.0 because relief valve is connected to the relieving volume with piping shorter than 2 feet.

$G_u$ = Gas factor for an uninsulated container, = 59.0 at 100 psig (conservative, it would be lower at 80 psig).

$A$ = Outside surface area of relief volume, = $2\pi\frac{0.84in}{2}\frac{ft}{12in}1.17ft$ =0.257 ft$^2$.

The required relief capacity is then

$$Q_a = (1.0)(59)0.257^{0.82} = 19.4\frac{ft^3}{\min}.$$

SV-96-N is a 1/2" Circle Seal series M5120 relief valve with a maximum flow rate of 51 SCFM at 80 PSIG with 10% overpressure, thus the trapped volume is adequately relieved with this relief valve.

**SV-97-N**

SV-97-N relieves a potential trapped volume between RV-036-N and MV-088-N. These valves are located outside PAB on the liquid nitrogen dewar pressure building loop. This section of piping is 14 inches of ½" SCH 10 SS pipe.

CGA Standard 1.3 paragraph 5.3.2 gives an equation for the minimum required total capacity of the pressure relief devices at a flow rating pressure of 121 percent of the MAWP of an uninsulated cryogenic container exposed to fire:

$$Q_a = FG_u A^{0.82}$$

where

$Q_a$ = Flow capacity of the relief device required in cubic feet per minute of free air.

$F$ = Correction factor, = 1.0 because relief valve is connected to the relieving volume with piping shorter than 2 feet.

$G_u$ = Gas factor for an uninsulated container, = 59.0 at 100 psig (conservative, it would be lower at 80 psig).

$A$ = Outside surface area of relief volume, = $2\pi \frac{0.84in}{2} \frac{ft}{12in} 1.17\,ft$ =0.257 ft$^2$.

The required relief capacity is then

$$Q_a = (1.0)(59)0.257^{0.82} = 19.4 \frac{ft^3}{\min}.$$

SV-97-N is a 1/2" Circle Seal series M5120 relief valve with a maximum flow rate of 51 SCFM at 80 PSIG with 10% overpressure, thus the trapped volume is adequately relieved with this relief valve.

**<u>SV-98-N</u>**

SV-98-N relieves a potential trapped volume between MV-95-N, MV-088-N, and MV-089-N. These valves are located outside PAB on the liquid nitrogen dewar pressure building loop. This section of piping is 17.8 feet of ½" SCH 10 SS pipe. Although SV-98-N is set to crack at 80 psig, all of the components it protects are rated for at least 250 psig.

CGA Standard 1.3 paragraph 5.3.2 gives an equation for the minimum required total capacity of the pressure relief devices at a flow rating pressure of 121 percent of the MAWP of an uninsulated cryogenic container exposed to fire:

$$Q_a = FG_u A^{0.82}$$

where

$Q_a$ = Flow capacity of the relief device required in cubic feet per minute of free air.

$F$ = Correction factor, = 1.0 because relief valve is connected to the relieving volume with piping shorter than 2 feet.

$G_u$ = Gas factor for an uninsulated container, = 75.5 at 250 psig.

$A$ = Outside surface area of relief volume, = $2\pi \frac{0.84in}{2} \frac{ft}{12in} 17.8\,ft$ =3.91 ft$^2$.

The required relief capacity is then

$$Q_a = (1.0)(75.5)3.91^{0.82} = 231 \frac{ft^3}{\min}.$$

SV-98-N is a 1/2" Circle Seal series M5120 relief valve with a maximum flow rate of 250 SCFM at 200 PSIG with 25% overpressure, thus the trapped volume is adequately relieved with this relief valve.

**SV-90-N**

SV-90-N relieves a potential trapped volume between PCV-70-N and MV-092-N. This section of piping is 5 feet of 1 ½" SCH 10 SS pipe. Although SV-90-N is set to crack at 200 psig, all of the components it protects are rated for at least 250 psig.

CGA Standard 1.3 paragraph 5.3.2 gives an equation for the minimum required total capacity of the pressure relief devices at a flow rating pressure of 121 percent of the MAWP of an uninsulated cryogenic container exposed to fire:

$$Q_a = FG_u A^{0.82}$$

where

$Q_a$ = Flow capacity of the relief device required in cubic feet per minute of free air.

$F$ = Correction factor, = 1.0 because relief valve is connected to the relieving volume with piping shorter than 2 feet.

$G_u$ = Gas factor for an uninsulated container, = 75.5 at 250 psig.

$A$ = Outside surface area of relief volume, = $2\pi \frac{1.90in}{2} \frac{ft}{12in} 5\,ft$ =2.49 ft$^2$.

The required relief capacity is then

$$Q_a = (1.0)(75.5)2.49^{0.82} = 160 \frac{ft^3}{\min}.$$

SV-90-N is a 1/2" Circle Seal series M5120 relief valve with a maximum flow rate of 250 SCFM at 200 PSIG with 25% overpressure, thus the trapped volume is adequately relieved with this relief valve.

**CVI-220-V**

This vacuum pumpout provides the vacuum relief for the "P-bar Molecular Sieve Filtering Dewar." Its spring has been removed to lower the relief pressure. The groove for the retaining clip has been filled with epoxy to prevent a spring from being re-installed. Thus it is basically a small parallel plate relief held shut by the vacuum pressure differential. This CVI model V-1046-31 vacuum pumpout port has a throat area of 1.23 in$^2$. According to the CGA, the area of a vacuum relief in sq. in. should be 0.00024 x wc where wc is the water capacity in pounds of the vessel. The water capacity of the vessel is about 32 gallons based on its 120 liter volume. The density of water is about 8.34 lb/gal. Thus the required relief area is 0.00024 x 32 x 8.34 = 0.064 in$^2$. Since the CVI throat area is much larger than the required relief area, the dewar is adequately relieved.

**PSV-313-Ar**

This relief valve is a 1 inch Circle Seal 500 series set at 6 psig. It has two purposes. First it is a trapped volume relief for the material lock. Secondly, if MV-254-V is open, PSV-313-Ar will vent the cryostat vapor space before the main relief PSV-210-Ar opens. PSV-210-Ar is an ASME coded relief. It is desirable to avoid opening PSV-210-Ar because if it does not reseal, it will have to be sent off site for repair.

Interpolation from the air flow rate table provided by Circle Seal indicates that the capacity of this valve is 24 SCFM air at 50% over pressure beyond its 6 psig crack pressure. This is about 9 psig. The mass flow rate of air is calculated as

$$W_{air} = 24\frac{ft^3}{\min} \times \frac{60\min}{hr} \times \frac{0.07491lb}{ft^3} = 107.87\frac{lb}{hr}.$$

This can then be converted to an equivalent flow rate of cold argon gas using the method outlined in ASME Section VIII Appendix 11.

Solving for KAP yields $(KAP) = \frac{W_{Air}}{C_{Air}\sqrt{\frac{M_{Air}}{T_{Air}}}} = \frac{107.87}{356\sqrt{\frac{28.9}{520}}} = 1.285$. The equivalent mass flow rate of saturated argon vapor is then computed as $W_{Ar} = 378(1.285)\sqrt{\frac{39.9}{165.8}} = 238.3\frac{lb}{hr}$ where the temperature used is that of saturated argon vapor at 9 psig. To convert the argon mass flow rate into a volumetric flowrate, the mass flow rate is divided by the density of the saturated argon vapor at 9 psig

$$Argon\frac{ft^3}{\min} = 238.3\frac{lb}{hr} \times \frac{1}{60}\frac{hr}{\min}\frac{1}{0.559}\frac{ft^3}{lb} = 7.1\frac{ft^3}{\min}.$$

Another measure of the capacity of this relief valve is how much heat input into the liquid it can relieve, which is calculated by multiplying the saturated vapor mass flow rate by the heat of vaporization which is found to be

$$238.3\frac{lb}{hr} \times \frac{67.67Btu}{lb} \times \frac{1055.06J}{1Btu} \times \frac{1hr}{3600\sec} = 4726\frac{J}{\sec} = 4726\ W\ .$$

## 4.1c - Relief Valve Sizing for the PAB LN2 Dewar

The pressure relief devices for the PAB LN2 dewar (formally PS1) were sized according to the Compressed Gas Association's CGA S-1.3—1995 document. This document is entitled, "Pressure Relief Device Standards Part 3—Stationary Storage Containers for Compressed Gases." In section 4.1.1 it states, "…each container shall be provided with a primary system of one or more pressure relief devices and a secondary system of one or more pressure relief valves or rupture disks or buckling pin devices." The relief valve sizing and installation described in this document also complies with the ASME PVB Div 1 UG-125 to UG-137 guidelines.

This vessel (Fermilab ID# RD0079) is equipped with two sets of pressure relief devices. Each set consists of an Anderson Greenwood relief valve paired with a Fike Corporation rupture disk in parallel. Both relief valves are set for 75 psig while the rupture discs are set to open at 105 psig. Either set can handle all conditions. Vessel dimensions and other characteristics are based upon Bruce Squire's Aug. 31st 1992 engineering note.

### Relief Valve Sizing for Fire Condition

First the fire condition is considered as it is the most difficult to relieve. To begin the calculation, an estimate of the relief capacity required is computed. This number is then corrected for pressure drop and temperature rise in the line that leads to the reliefs. In section 5.3.3 of the CGA standard, the following equation is used to calculate the minimum required flow capacity

$$Q_a = FG_iUA^{0.82}$$

where:

*U* = Overall heat transfer coefficient to the liquid, $\frac{Btu}{hr \cdot ft^2 \cdot {}^oF}$.

The dewar is encased in perlite insulation 8.75 inches in thickness. The thermal conductivity for perlite is based upon Figure 7.13 in R. Barron's text Cryogenic Systems. At $10^3$ torr, indicating the vacuum has been spoiled, the apparent thermal conductivity of the perlite is 43.3 mW $m^{-1}$ $K^{-1}$ which converts to 0.0250 Btu $ft^{-1}$ $hr^{-1}$ $^oF^{-1}$. The over heat transfer coefficient is then the thermal conductivity of the insulation divided by its thickness or

$$\frac{0.0250 Btu}{ft \cdot hr \cdot {}^oF}\frac{1}{0.73 ft} = 0.034\frac{Btu}{hr \cdot ft^2 \cdot {}^oF}.$$

*F* = Correction factor for pressure drop and temperature rise in line to relief valve.

*A* = Arithmetic mean of the inner and outer surface areas. The inner vessel is 66 inches in diameter ($D_i$) and 128 in. long ($OL_i$) while the outer vessel is 84 inches in diameter ($D_o$) and 168 inches long ($OL_i$).

$$A = \frac{(OL_i + 0.3D_i) \times D_i \times 3.1416 + (OL_o + 0.3D_o) \times D_o \times 3.1416}{2} = \frac{(128 + 0.3(66)) \times 66 \times 3.1416 + (168 + 0.3(84)) \times 84 \times 3.1416}{2} = 40815\ in^2 = 283\ ft^2$$

$G_i$ = Gas factor for insulated containers.

$Q_a$ = Flow capacity required at applicable flow rating pressure and 60 $^oF$ in cubic feet per minute of free air.

To calculate the initial estimate of the relief capacity needed, a gas factor, $G_i$, must be found. From Table 1 in CGA S-1.3 finds $G_i$ to be 10.2 at 100 psig. This $G_i$ value is conservative for the 75 psig reliefs.

The uncorrected volumetric flow rate was found to be

$$Q_{ae} = 1.0 \cdot 10.2 \cdot 0.034 \cdot 283^{0.82} = 35.5 \frac{ft^3}{\min} \text{ of free air.}$$

The mass flow rate is computed using

$$W = \frac{Q_{ae} C}{18.35} \sqrt{\frac{M}{ZT}}$$

where

$Q_{ae}$ = calculated flow capacity with $F$=1.0 in $\frac{ft^3}{\min}$ of free air.

$W$ = Required mass flow rate of lading thru the pressure relief device in $\frac{lb_m}{hr}$.

$C$ = Constant for vapor related to ratio of specific heats ($k=C_p/C_v$) at standard conditions. $k$ = 1.410 for Nitrogen at 60 $^oF$ and 14.696 psia which corresponds to $C$ = 356.

$M$ = Molecular weight of gas, 28.097.

$T$ = Flow rating temperature, 176.6 $^oR$. (This is the saturation temperature at the flow rating pressure. The flow rating pressure is 110% of the relief valve set pressure. It is 1.1 x (75 +14.7) = 98.67 psia.)

$Z$ = Compressibility factor for saturated vapor at 98.67 psia.

$$Z = \frac{Pv}{RT}, \qquad Z = \frac{98.67(0.5724)144}{\frac{1545}{28.097}(176.6)} = 0.8375.$$

$T$ = Flow rating temperature, 176.6 $^oR$.

$M$ = Molecular weight of gas, 28.097.

$R$ = Ideal Gas constant

$v$ = specific volume, saturated vapor at flow rating pressure of 98.67 psia, 0.5724 $\frac{ft^3}{lb_m}$.

The mass flow rate was found to be, $W = \frac{35.5 \cdot 356}{18.35} \sqrt{\frac{28.097}{0.8375 \cdot 176.6}} = 300.2 \frac{lb_m}{hr}$.

To calculate the temperature at the inlet of the relief device,

$$T_i = 2145 - \frac{2145 - T_s}{e^{\frac{5.24dL}{WCp}}} \text{ (CGA S-1.3 Section 5.1.4)}$$

was used where

$T_i$ = Temperature at the inlet to the pressure relief device during full flow conditions, $^oR$.

$T_s$ = Saturation temperature at flow rating pressure, 176.6 $^oR$.

$d$ = Line diameter. 2.375 in. is the outside diameter of the 2 inch SCH 10 pipe that leads to the relief vavles.

$L$ = Length of piping between pressure relief device and container, 6.5 feet internal and 3.5 feet external for a total of 10 ft.

$W$ = Required mass flow rate of lading thru the pressure relief device, 300.2 $\frac{lb_m}{hr}$.

$C_p$ = Average specific heat at constant pressure of lading between $T_s$ and 590 $^oR$, 0.26 $\frac{Btu}{lbm \cdot {}^oF}$.

The inlet temperature to the relief device is then

$$T_i = 2145 - \frac{2145 - 176.6}{e^{\frac{5.24(2.375)10}{300.2(0.26)}}} = 1745^oR.$$

The pressure at the inlet of the relief device is calculated using

$$P_i = P - 3.36x10^{-6}\frac{f\ell W^2 v}{d^5} \text{ (CGA S-1.3 Section 5.1.4)}$$

where

$P_i$ = Pressure at the inlet of the pressure relief device.

$P$ = Flow rating pressure, 98.67 psia.

$f$ = Friction factor based on Crane Technical Paper No. 410, f = 0.019.

$\ell$ = Equivalent length of pipe based on Bruce Squire's calculations

$$\frac{K}{d^4} = 0.394 \Rightarrow K = 0.394d^4, L = \frac{Kd}{f} \Rightarrow L = \frac{0.394d^5}{f} \Rightarrow L = \frac{0.394(2.157^5)}{0.019} = 968in = 81ft$$

$W$ = Required mass flow rate, 300.2 $\frac{lb_m}{hr}$.

*v* = Specific volume of the fluid being relieved, at the flow rating pressure (98.67 psia) and the average temperature between $T_i$ (1745 °R) and $T_s$ (176.6 °R), 3.741 $\frac{ft^3}{lb_m}$.

*d* = Pipe diameter, 2.157 inches.

The inlet pressure to the relief valve is then

$$P_i = 98.67 - 3.36x10^{-6}\frac{0.019(81)300.2^2 3.741}{2.157^5} = 98.63 psia.$$

The correction factor that accounts for line pressure drop and temperature rise is

$$F = \sqrt{\frac{P_i V_i}{Pv}}$$

where

*F* = The correction factor.

$P_i$ = Pressure at the inlet of the pressure relief device, 98.63 psia.

*P* = Flow rating pressure, 98.67 psia.

$v_i$ = Specific volume of the fluid being relieved at the inlet of the pressure relief device,6.794 $\frac{ft^3}{lb_m}$.

*v* = Specific volume of the fluid being relieved at the flow rating pressure and temperature, 0.5724 $\frac{ft^3}{lb_m}$.

The correction factor *F* was found to be

$$F = \sqrt{\frac{(98.63)6.794}{(98.67)0.5724}} = 3.44.$$

**Referring back to the beginning of this document, the corrected relief capacity required is**

$Q_a = 3.44(10.2).0.034(283)^{0.82} = 122\frac{ft^3}{\min}$ **of free air for the fire condition. Each relief valve can deliver 731 SCFM, thus the vessel is adequately.**

The relief valves vent thru an elbow and 22 inches of vertical pipe. The pressure drop thru this vent is found from

$$\Delta P = 3.36x10^{-6}\frac{f\ell W^2 v}{d^5}$$

where

$P_i$ = Pressure at the inlet of the pressure relief device, 14.7 psia for the assumption that the relief valve discharges to atmosphere.

$\Delta P$ = Pressure drop across relief valve, psi.

$f$ = Friction factor based on Crane Technical Paper No. 410, f = 0.019.

$\ell$ = Equivalent length of pipe for one elbow and 22 inches of straight pipe

$$f\frac{L}{D} = 30 f_T \Rightarrow L_{elbow} = 30D,\ L_{total} = 30D + 22 = 30(2.157) + 22 = 87in = 7.25ft.$$

$W$ = Required mass flow rate, 300.2 $\frac{lb_m}{hr}$.

$v$ = Specific volume of the fluid being relieved, at the flow rating pressure (14.7 psia) and the fire temperature of $T_i$ (1745 $^o$R), 45.49 $\frac{ft^3}{lb_m}$.

$d$ = Pipe diameter, 2.157 inches.

$$3.36x10^{-6}\frac{0.019(7.25)300.2^2(45.49)}{2.157^5} = 0.04psi$$

**Thus the pressure drop thru the relief valve exhaust stack is insignificant.**

**<u>API Relief Valve Sizing Recommendations</u>**

The sizing of the relief valve must also be checked against the API recommendations. For Gas flow under sonic conditions the API recommends:

$$A = \frac{V\sqrt{ZTM}}{6.32CKP_1K_b}$$

Where:

$A$ = Required effective discharge area, in$^2$.
$V$ = Required flow thru valve, 122 SCFM (for fire relief).
$T$ = Temperature, 1745 $^o$R at flowing conditions (for fire relief).
$Z$ = Compressibility factor at flowing conditions (for fire relief),

$$Z = \frac{Pv}{RT}, \qquad Z = \frac{98.67(6.791)144}{\frac{1545}{28.097}(1745)} = 1.0.$$

$C$ = Coefficient based on specific heats, $C$ = 356.
$K$ = Effective coefficient of discharge, $K$ = 0.816 for the Anderson Greenwood reliefs.
$K_b$ = Capacity correction factor due to back pressure, $K_b$ = 1.0 as it was previously shown that the exhaust back pressure is minimal.
$P_1$ = Upstream pressure, 98.67 psia.

$$A = \frac{122\sqrt{1.0(1745)28}}{6.32(356)0.816(98.67)1.0} = 0.149 in^2$$

The relief valves have an effective flow area of 0.503 $in^2$ which is >> 0.036 $in^2$, thus they are adequately sized.

**Relief Valve Reaction Forces**

Another concern is the force resulting from the discharge of the gas from the relief. The API standard RP 520 in Part II section 2.4 suggests the following equation to calculate the reactive force

$$F = W\frac{\sqrt{\frac{kT}{(k+1)M}}}{366}$$

where

*F* = horizontal reactive force at center line of valve outlet when any gas or vapor is flowing, in pounds.

W = flow of any gas or vapor, in pounds per hour. This value is 300.2 lbm $hr^{-1}$ for the fire condition.

*k* = ratio of specific heats, $C_p/C_v$ which is 1.41 for nitrogen.

*T* = absolute temperature at inlet to relief valve, 1745 $^oR$ for the fire condition.

*M* = molecular weight of any gas or vapor. The molecular weight for Nitrogen is 28.01.

$$F = 300.2\frac{\sqrt{\frac{1.41(1745)}{(1.41+1)28.01}}}{366} = 4.95 \; pounds\ of\ force.$$

**Thus the discharge force is insignificant at 4.95 pounds and no special measures need to be taken.**

**Loss Of Vacuum Relief Valve Sizing**

The fire condition includes loss the loss of insulating vacuum. Thus the relief valve can easily handle loss of insulating vacuum without the heat input of a fire.

**Pressure Building Loop Failure**

A failure in the pressure building loop is an additional scenario that could increase the dewar pressure and cause the relief valves to open. The $C_v$ of the pressure building regulator (RV-036-N) is 1.3. There is about 80 inches of liquid head above the regulator which corresponds to a pressure difference of 2.33 psi. The maximum liquid nitrogen flow thru the regulator can be calculated using the following equation form Crane 410

$$Q = C_v \sqrt{\Delta P \frac{62.4}{\rho}}$$ where

$Q$ = liquid flow rate in gallons per minute.

$C_v$ = flow coefficient for pressure building regulator, = 1.3.

$\Delta P$ = pressure difference across the regulator, = 2.33 psi.

$\rho$ = density of liquid nitrogen at 75 psig, = 44.17 lb/ft$^3$.

$$Q = 1.3\sqrt{2.33\frac{62.4}{44.7}} = 2.36\frac{gal}{\min}.$$ This converts to SCFM nitrogen as

$$2.36\frac{gal}{\min} \times \frac{1ft^3}{7.48gal} \times \frac{44.17lb}{ft^3} \times \frac{ft^3}{0.07247lb} = 192\frac{ft^3}{\min}.$$ This is less than the relief valve capacity of 731 SCFM. This is a very conservative calculation because there are other restrictions in the pressure building loop and there is not enough vaporizer surface area to provide such a flowrate.

**Vacuum Shell Relief**

The vacuum relief is sized according to the CGA standard that states the minimum discharge area of the vacuum jacket relief will be:

Discharge Area (in$^2$) = 0.00024 x (water capacity of the lading vessel (lb. $H_2O$))

The volume of the lab 6 dewar is 1850 gallons. The density of water is 62.38 lb ft$^{-3}$. Thus the required vacuum relief area is

$$0.00024 \cdot 1850gal \cdot \frac{1ft^3}{7.481gal} \cdot \frac{62.38lb}{ft^3} = 3.70in^2$$

The vacuum relief is supplied by a flat flange on top front of the vessel. The ID of the relief plate is 3 inches. The relief area available is then

$$= \frac{\pi}{4}(3.0)^2 = 7.1in^2$$

which is more than adequate.

**References**

Barrons, R. “Cryogenic System,” Oxford University Press.

Hands, BA. “Cryogenic Engineering,” Academic Press, pages 89-121.

Incropera, I. and DeWitt, D., “Fundamentals of Heat and Mass Transfer,” John Wiley & Sons, pages 482-516.

.

## 4.2 – Material Stress Levels

Luke Flange

The flange that mates with Luke is shown in Figure 4.2.1. The flange is 1.5 inch thick 304 stainless steel and is populated by several conflat flanges and VCR fittings. Both the conflat flanges and VCR fittings are welded to stainless steel tubes which are then welded to the flange.

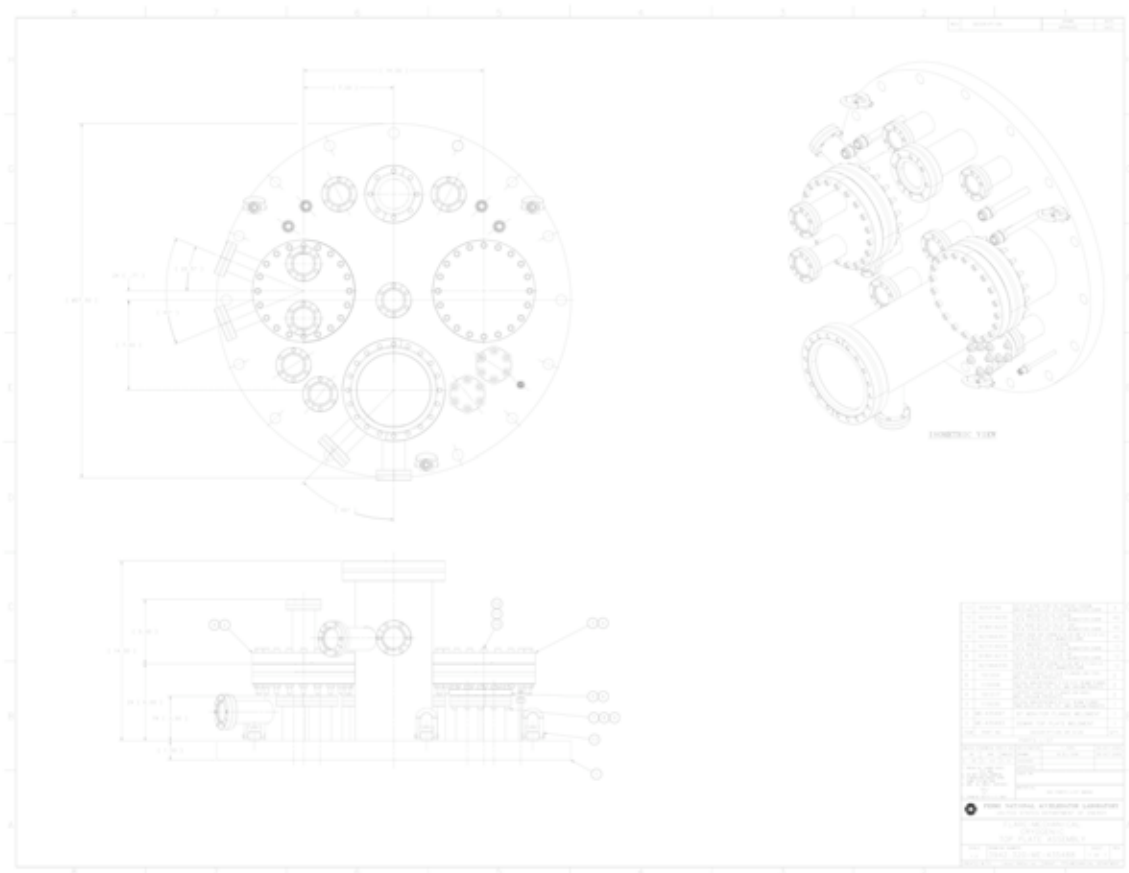

Figure 4.2.1: Luke flange.

Ignoring the numerous penetrations for the moment, the stress in the flat head can be calculated from elastic plate theory as

$$\sigma = 0.3P\left(\frac{d}{t}\right)^2$$ where

*P* = maximum pressure differential across the head, 35 psi.

*d* = diameter of the head, 23.035 inches according to Figure UG-34 (j).

*t* = thickness of flange, 1.5 inches.

The maximum stress in the flat head is then

$\sigma = 0.3P\left(\frac{d}{t}\right)^2 = 0.3(35)\left(\frac{23.035}{1.5}\right)^2 = 2476\,psi$ which is far less than the 18,800 psi allowed by the ASME code for 304 SS.

Dave Pushka performed an FEA analysis of the head that includes all the penetrations. The model is conservative in two key ways. The penetration diameters match the mating tube ODs all the way thru the flange. In reality, there is a step that reduces the diameter of the penetration to that of the tube ID part way thru the flange. Secondly, the flange is fixed outside the bolt holes In the FEA model for modeling simplicity.

Figure 4.2.2 shows the Von Mises stress contours. The maximum stress is 7,600 psi which is less than half of the ASME allowable stress of 18,800 psi.

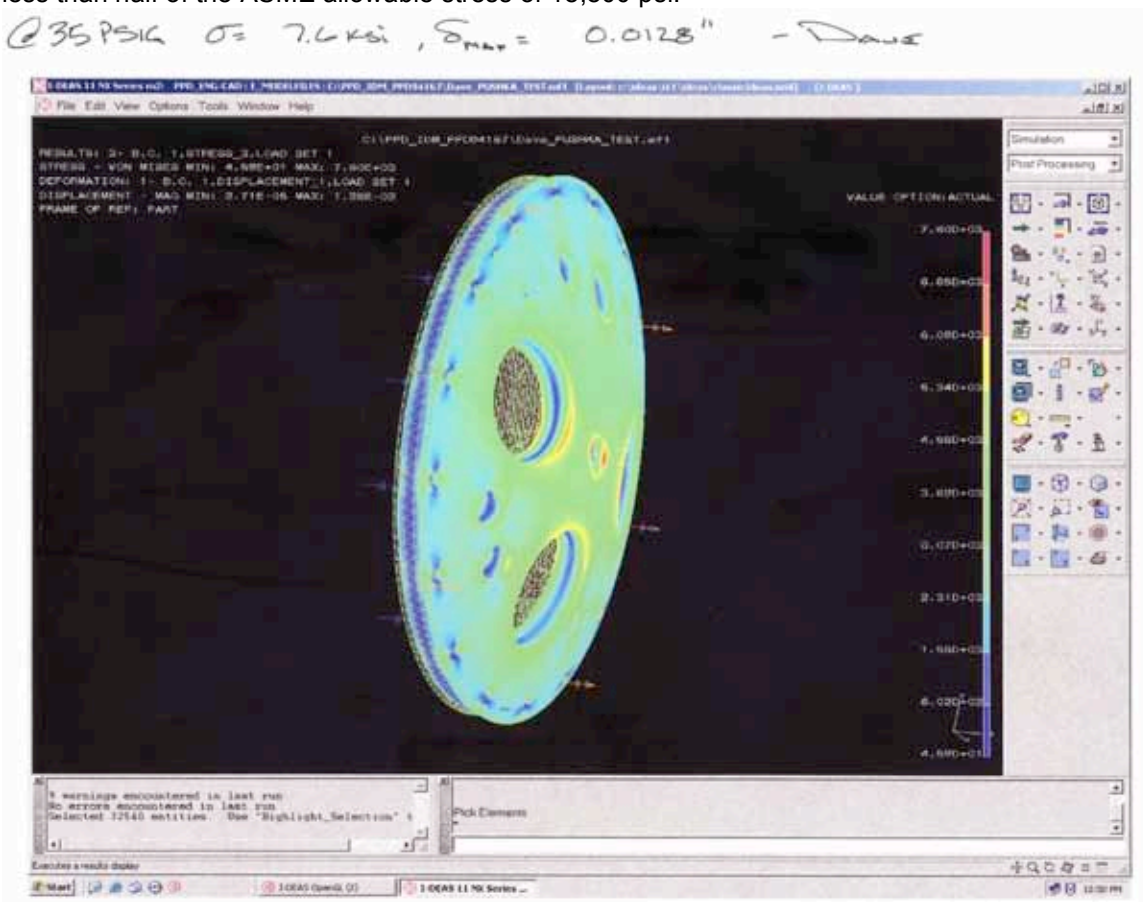


Figure 4.2.2: Luke flange stress contours at 35 psid.

Figure 4.2.3 shows the deflection contours. The maximum deflection is 1.28 x $10^{-2}$ inches.

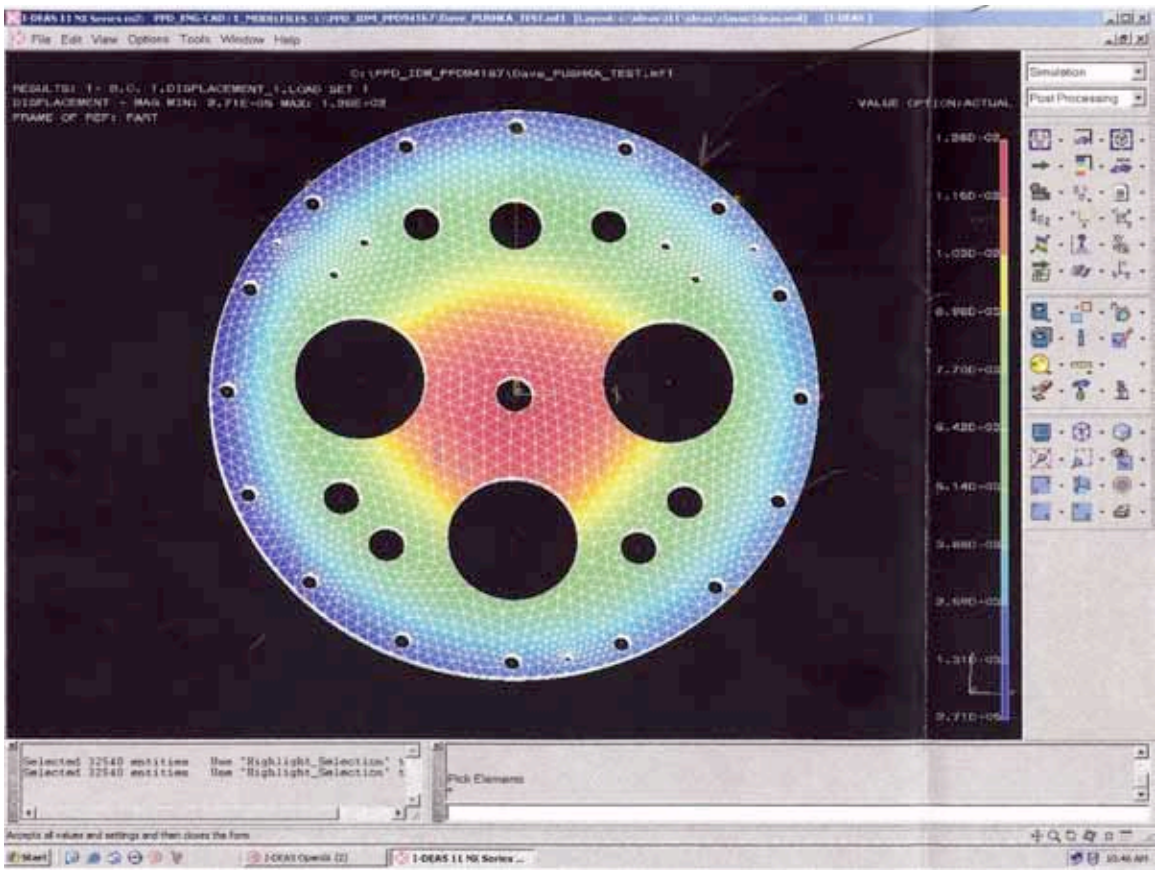


Figure 4.2.3: Luke flange displacement contours at 35 psid.

Three large 8 inch conflat flanges that populate the flange. The conflat flanges are not rated for positive pressure, however they are quite substantial. A blank 8 inch conflat flange has a thickness of 0.880 inches, a bolt circle diameter of 7.128 inches, and is constructed from 304L SS. If modeled as an elastic plate, the ASME stress at 35 psid can be calculated as

$\sigma = 0.3P\left(\frac{d}{t}\right)^2 = 0.3(35)\left(\frac{7.128}{0.88}\right)^2 = 689\,psi$ which is far less than the ASME allowable stress

of 16,700 psi for 304L SS. The smaller conflats used on the system are just as substantial.

<u>Argon piping</u>

The majority of the argon piping is 3/8 inch OD 0.035 inch wall 304 type stainless steel tube and 3/8 inch OD 0.032 inch wall Cu tubing.

The MAWP of this tubing can be calculated from ANSI/B31.1.

$P = \frac{2SEt_m}{D_o - 2yt_m}$ where

*SE* = allowable stress, 18,800 psi for SS304, 6,000 psi for Cu.

$t_m$ = Minimum wall thickness allowed, = 92.5% $t_n$ for tubing.

$t_n$ = Nominal wall thickness, inches.

$D_0$ = Outside diameter of pipe, = 0.375 inches.

$Y$ = Coefficient equal to 0.4.

For the stainless steel tubing, the maximum allowable working pressure is

$$P = \frac{2(18800)0.925(0.035)}{0.375 - 2(0.4)0.925(0.035)} = 3487\,psi.$$

For the copper tubing, the maximum allowable working pressure is

$$P = \frac{2(6000)0.925(0.035)}{0.375 - 2(0.4)0.925(0.035)} = 1113\,psi.$$

The tubing is adequate for this application because the highest relief valve set point on the argon circuit is 400 psig.

Radiography

Neither the argon piping nor the nitrogen piping was radiographed. During fabrication, it was learned that the cryogenic safety subcommittee was discussing the issue of radiographing vacuum jacketed piping and that a welding procedure was under development to use in lieu of radiography. All welding on the system was supervised by Cary Kendziora who is very experienced with the fabrication of welded stainless steel parts used in high vacuum applications.

Argon Filters

The argon circuit contains two identical filter assemblies which are constructed from stainless steel tube and with conflat end flanges. The conflat flanges are blanks with a hole drilled thru the center for fluid flow. The stainless steel tube has an OD of 2.375 inches with a wall thickness of 0.09375 inches. The MAWP for the tube is then

$P = \frac{2(18800)0.925(0.09375)}{2.375 - 2(0.4)0.925(0.09375)} = 1414\,psi$ which is greater than the 400 psig relief valve set points.

If the conflats are modeled as a simply supported circular plate under uniform pressure, the stress in the conflat can be calculated from

$\sigma = 0.300P\left(\frac{d}{t}\right)^2$ where the 0.300 factor comes from ASME Fig. UG-34 Figure K and

$P$ = the uniform applied pressure, 400 psig.

$d$ = diameter of conflat exposed to pressure, 3.05 inches.

$t$ = thickness of the conflat, 0.68 inches.

The stress in the conflat is then $\sigma = 0.300(400)\left(\frac{3.05}{0.68}\right)^2 = 2414\,psi$ which is far less than the allowable 18,800 psi for stainless steel.

The eight 5/16 inch diameter 24 thread per inch bolts used in the conflat flange are made from SS-302 HQ with a 70,000 psi yield strength. Their tensile stress area, $A_t$, is 0.0581 in$^2$.

The force applied to the 8 bolts is the pressure multiplied by the area which is

$$400\frac{lb}{in^2} \times \frac{\pi}{4} 3.05^2 in^2 = 2922\ lb.$$

The tensile stress in the bolt, $\sigma_t$, is the force $F$ divided by the tensile stress area $A_t$.

$$\sigma_t = \frac{F}{A_t} = \frac{\frac{2922}{8} lb}{0.0581 in^2} = 6286\frac{lb}{in^2}.$$ Thus the bolt stress due to the pressure applied to the flange is less then 10% of the bolt's minimum yield strength.

<u>Argon Fill Manifold</u>

The argon manifold that ties four stock room dewars together was analyzed using the piping features built into ANSYS. A 400 psi internal pressure was applied and the internal tubing was fixed at each point where it is welded to the vacuum jacket. Figure 4.2.1 shows the model result which indicates the maximum stress is 8,543 psi which is less than half of the allowable 18,800 psi for 304 stainless steel.

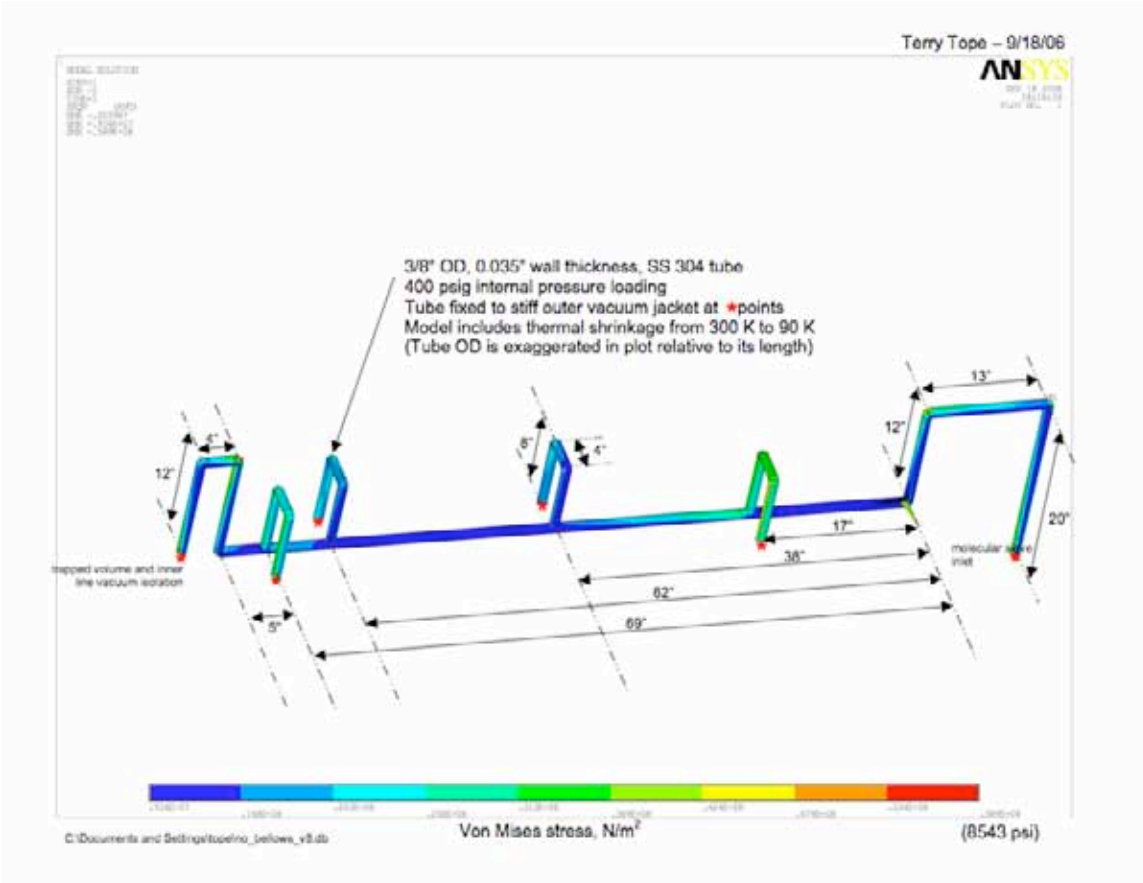


Liquid Nitrogen Piping

The liquid nitrogen piping consists of 304 stainless steel tube that is 0.5 inch OD with a 0.035 inch wall. The maximum allow working pressure for this tube is

$$P = \frac{2(18800)0.925(0.035)}{0.500 - 2(0.4)0.925(0.035)} = 2568\,psi$$ which is far more than the 100 psig

trapped volume relief valve set points.

Thermal contraction in the liquid nitrogen transfer line is taken care of by numerous braided stainless steel flex hoses which are all rated for at least 100 psig.

Argon transfer line

The argon transfer line is designed in a manner such that the stresses due to thermal contraction are insignificant. In Figure 1.1.1, the large amount of flexibility in the argon transfer line is apparent.

MV-254-V

MV-254-V is a Norcal manually operated viton seal vacuum gate valve constructed from 304 stainless steel. The valve attaches to the cryostat using 8 inch conflat flanges. The valve was chosen to create a large aperture for passing materials thru that can be sealed. The valve is not rated by Norcal for positive internal pressure.

The structurally weakest part of the valve appears to be large flat rectangular panel between the conflat flange and the thick end flange that holds the actuating mechanism. To investigate the stress in this part, the section was analyzed as an unstayed flat head per section UG-34 of the ASME code.

The maximum pressure for this valve can be calculated from

$$t = d\sqrt{\frac{ZCP}{SE}} \Rightarrow P = \left(\frac{t}{d}\right)^2 \frac{SE}{ZC} \text{ and } Z = 3.4 - \frac{2.4d}{D} \text{ where}$$

*t* = minimum required thickness of the flat heat.

*d* = length of short span, = 6 inches.

*D* = long span of noncircular heads measured perpendicular to short span, = 7 9/16 inches.

*Z* = factor of noncircular heads and covers that depends on the ratio of the short span to the long span

*C* = a factor depending upon the method of attachment of head, = 0.33 from Figure UG-34.

*P* = internal design pressure, 35 psi.

*S* = maximum allowable stress value in tension, = 18,800 psi for 304 SS.

*E* = joint efficiency from Table UW-12, taken as 0.5 to be conservative.

$$Z = 3.4 - \frac{2.4(6)}{\left(7 + \frac{9}{16}\right)} = 1.496,\ P = \left(\frac{0.125}{6.0}\right)^2 \frac{(18800)0.5}{1.496(0.33)} = 8.3 psi.$$

The maximum pressure this valve housing should see is 8.3 psid internal based on the large flat section.

The side of the valve consists of a strip of 1/8 inch thick stainless steel that measures 1.125" (*d*) x 13" (*D*). Applying the above equations gives an estimate of the strength of the maximum pressure this part of the valve body can withstand.

$$Z = 3.4 - \frac{2.4(1.125)}{(13)} = 3.19,\ P = \left(\frac{0.125}{1.125}\right)^2 \frac{(18800)0.5}{3.19(0.33)} = 110 psi$$

The valve body is only pressurized if the valve is open. Otherwise the valve body is sealed off from the vapor space of Luke. When the valve is open, excess pressure is vented thru PSV-313-Ar which is set at 6 psig. However, PSV-313-Ar has less capacity then PSV-210-Ar. To ensure the valve body does not rupture if the gate valve is open when warm material is submerged into the liquid argon, it is strengthened by encasing the housing in 1/2 inch thick 6061-T6 Aluminum which as an ASME allowable stress of 10,500 psi. Applying the above equation again, an estimate is made for the strength of this housing

$P = \left(\frac{0.5}{6.0}\right)^2 \frac{(10500)0.5}{1.496(0.33)} = 73.9\,psi$. This exceeds the 35 psig relief valve set point. MV-254-V has been successfully pressure tested to 110% of the 35 psig MAWP of Luke.

Condenser

The nitrogen space of the condenser is vented to atmosphere and cannot be isolated. Thus the maximum pressure differential it can see is 15 psig to vacuum. The maximum pressure differential that can applied to the 6 inch tube calculated from

$P = \frac{2SEt_m}{D_o - 2yt_m}$ where

*SE* = allowable stress, 18,800 psi for SS304.

$t_m$ = Minimum wall thickness allowed, = 92.5% $t_n$ for tubing.

$t_n$ = Nominal wall thickness, 0.109 inches.

$D_0$ = Outside diameter of pipe, = 6.0 inches.

*Y* = Coefficient equal to 0.4.

For the stainless steel tubing, the maximum allowable working pressure is

$P = \frac{2(18800)0.925(0.109)}{6.0 - 2(0.4)0.925(0.109)} = 640\,psi$ which is far above the 15 psid to vacuum.

From elastic plate theory, the stress in the top and bottom fixed welded plates that cap the nitrogen space can be calculated as

$\sigma = 0.188P\left(\frac{d}{t}\right)^2 = 0.188(15)\left(\frac{6}{0.375}\right)^2 = 722\,psi$ which is far less than the 18,800 psi maximum allowable stress in 304 stainless steel.

The argon space of the condenser will see the maximum dewar pressure of 35 psig. The argon space is fabricated from 2 inch OD copper tube with a 0.058 inch wall and 7/8 inch OD copper tube with a 0.032 inch wall.

The maximum pressure that may be applied to the 2 inch section is calculated in the following manner.

$P = \frac{2SEt_m}{D_o - 2yt_m}$ where

*SE* = allowable stress, 6,000 psi for copper.

$t_m$ = Minimum wall thickness allowed, = 92.5% $t_n$ for tubing.

$t_n$ = Nominal wall thickness, 0.058 nches.

$D_0$ = Outside diameter of pipe, = 2.0 inches.

$Y$ = Coefficient equal to 0.4.

For the copper tubing, the maximum allowable working pressure is

$P = \frac{2(6000)0.925(0.058)}{2.0 - 2(0.4)0.925(0.058)} = 328\,psi$ which is far above the 35 psid maximum from the argon to the nitrogen space.

The maximum pressure that may be applied to the 7/8 inch OD section is calculated in the following manner.

$P = \frac{2SEt_m}{D_o - 2yt_m}$ where

$SE$ = allowable stress, 6,000 psi for copper.

$t_m$ = Minimum wall thickness allowed, = 92.5% $t_n$ for tubing.

$t_n$ = Nominal wall thickness, 0.032 nches.

$D_0$ = Outside diameter of pipe, = 7/8 inches.

$Y$ = Coefficient equal to 0.4.

For the copper tubing, the maximum allowable working pressure is

$P = \frac{2(6000)0.925(0.032)}{\frac{7}{8} - 2(0.4)0.925(0.032)} = 417\,psi$ which is far above the 35 psid maximum from the argon to the nitrogen space.

From elastic plate theory, the stress in the top fixed welded plate that caps the argon space can be calculated as

$\sigma = 0.188P\left(\frac{d}{t}\right)^2 = 0.188(35)\left(\frac{2}{0.125}\right)^2 = 1684\,psi$ which is far less than the 6,000 psi maximum allowable stress in copper.