100kton Design Proposal

- Reminder of ~2005 FLARE design, more recent LArTPC design, and other designs
- Recent reviews / decisions / directions
- Proposal for 100kton Design effort

Presented by David Finley to Fermilab LArTPC group October 11, 2007

Liquid Argon TPC Overview for NuSAG

Note: At this point in time ...

"15" could be "50"

"1" could be "3"

etc

The optimum choices depend on the goals.

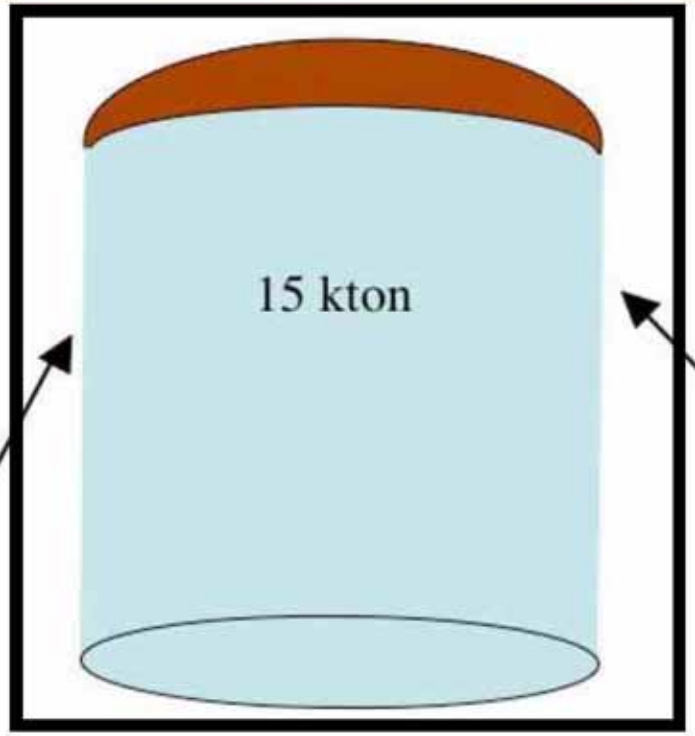

Submitted to NuSAG by the LArTPC group

Summer 2005

The "LArTPC group" is Fermilab plus 6 universities

Physics Development *using* ***existing*** *technology*
Record **complete neutrino interactions**: (ν_e & ν_μ)
Establish **Physics Collaboration**
Develop **Event Identification**,
Develop **Reconstruction**,
Develop **Analysis**,
Establish successful **Technology transfer**

Engineering Development:
Construction of Tank
Argon Purity
Mechanical Integrity of TPC
Readout S/N
Microphonics due to Argon Flow

Technical Setups

Purity Monitor Development	Materials Tests	5 m Drift Demonstration	Long Wires Tests	Electronics Development

Large Tank Design

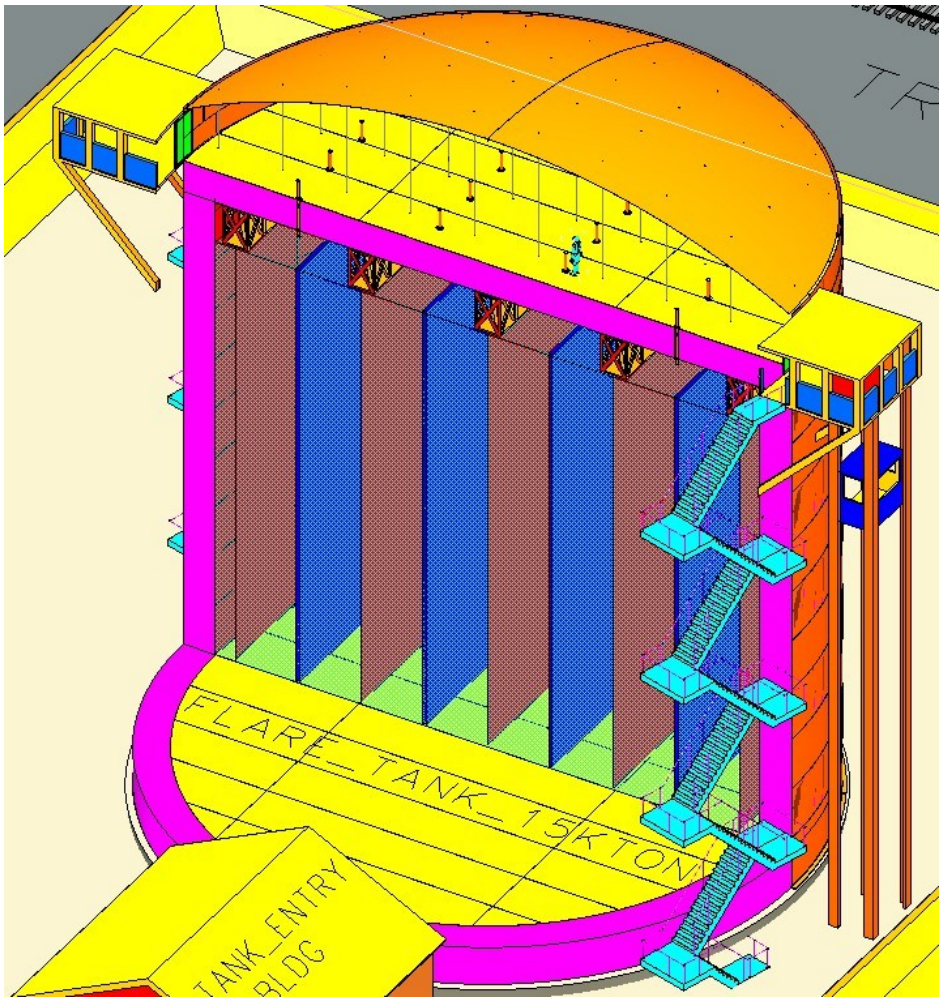

Concept:
The cold tank has self-supporting cold top deck.
The warm deck is supported from the dome.

On cooldown, wires cool quickly and contract. High stress.
Later the cold tank shrinks and relieves some of the wire tension.

During the high stress phase wires may break, weights are used to tension the wires.

Hans Jostlein, May 13 2006, LAr group meeting
docdb 155 Jostlein_bigtank.ppt

LArTPC 50KT. (section B-B)

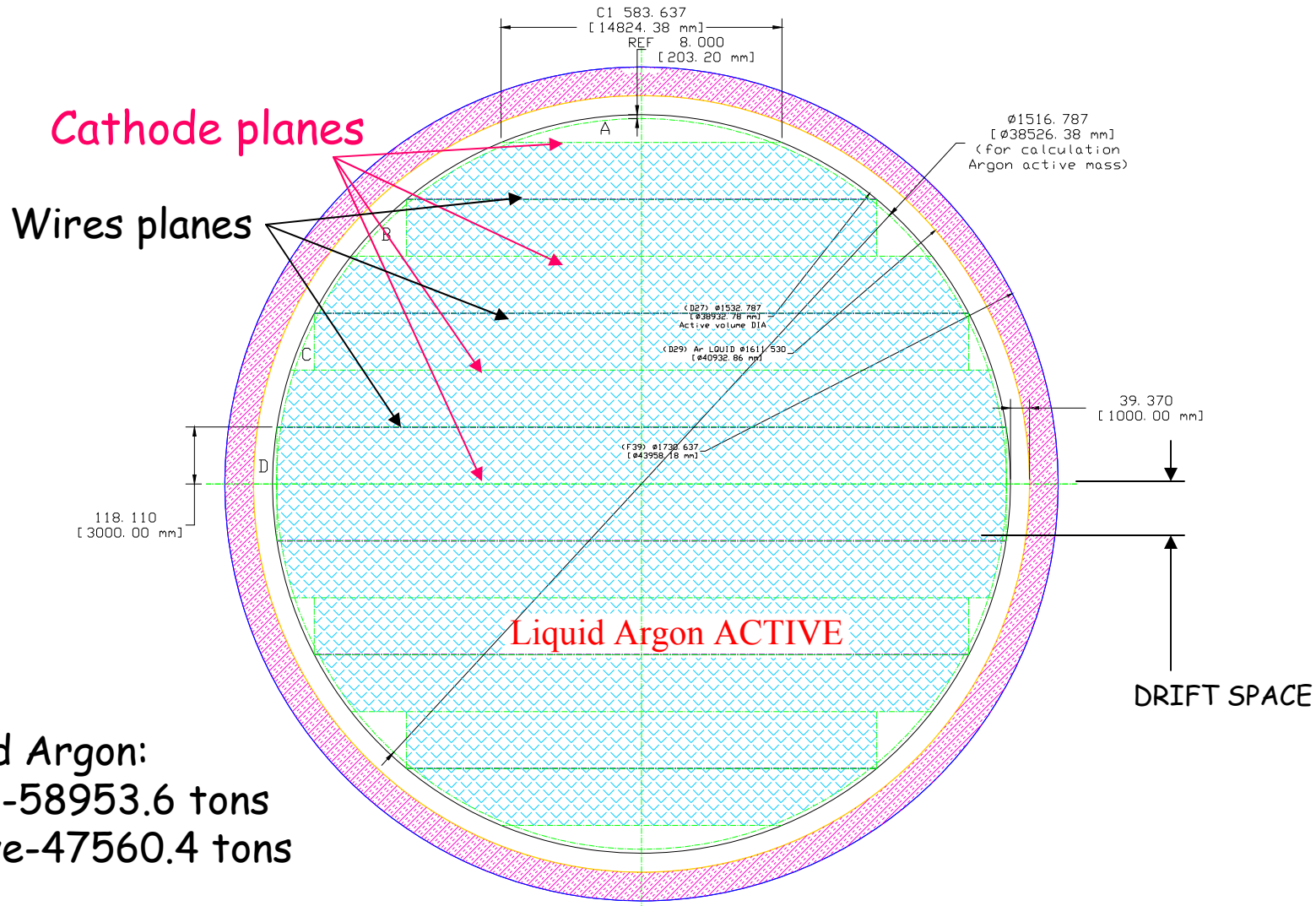

Liquid Argon:
Total-58953.6 tons
Active-47560.4 tons

SECTION B-B

Hans Jostlein, May 13 2006, LAr group meeting
docdb 155 Jostlein_bigtank.ppt

LArTPC 50KT (wire plane section)

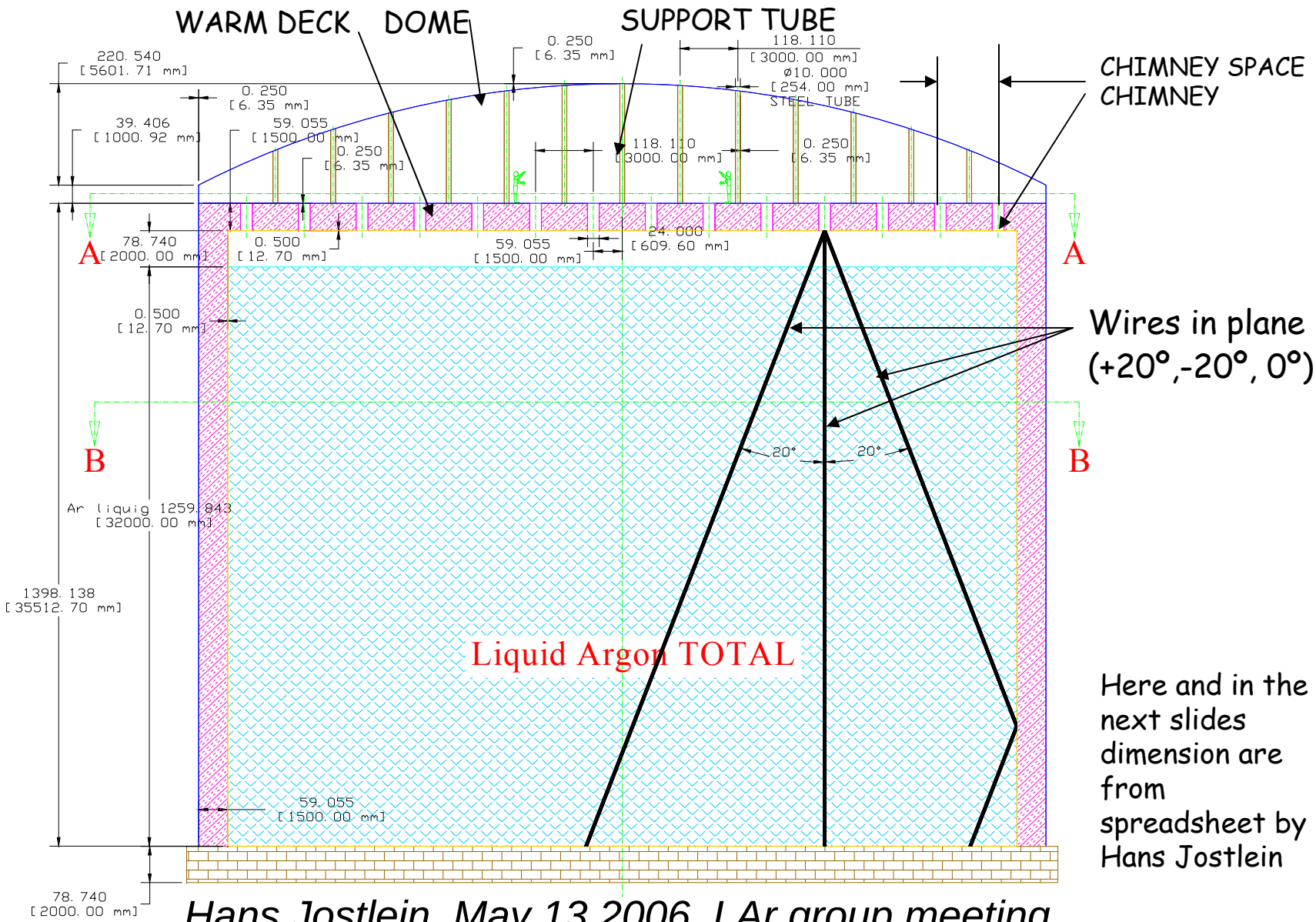

Here and in the next slides dimension are from spreadsheet by Hans Jostlein

Hans Jostlein, May 13 2006, LAr group meeting
docdb 155 Jostlein_bigtank.ppt

Geometry of wire arrangement at base of tank

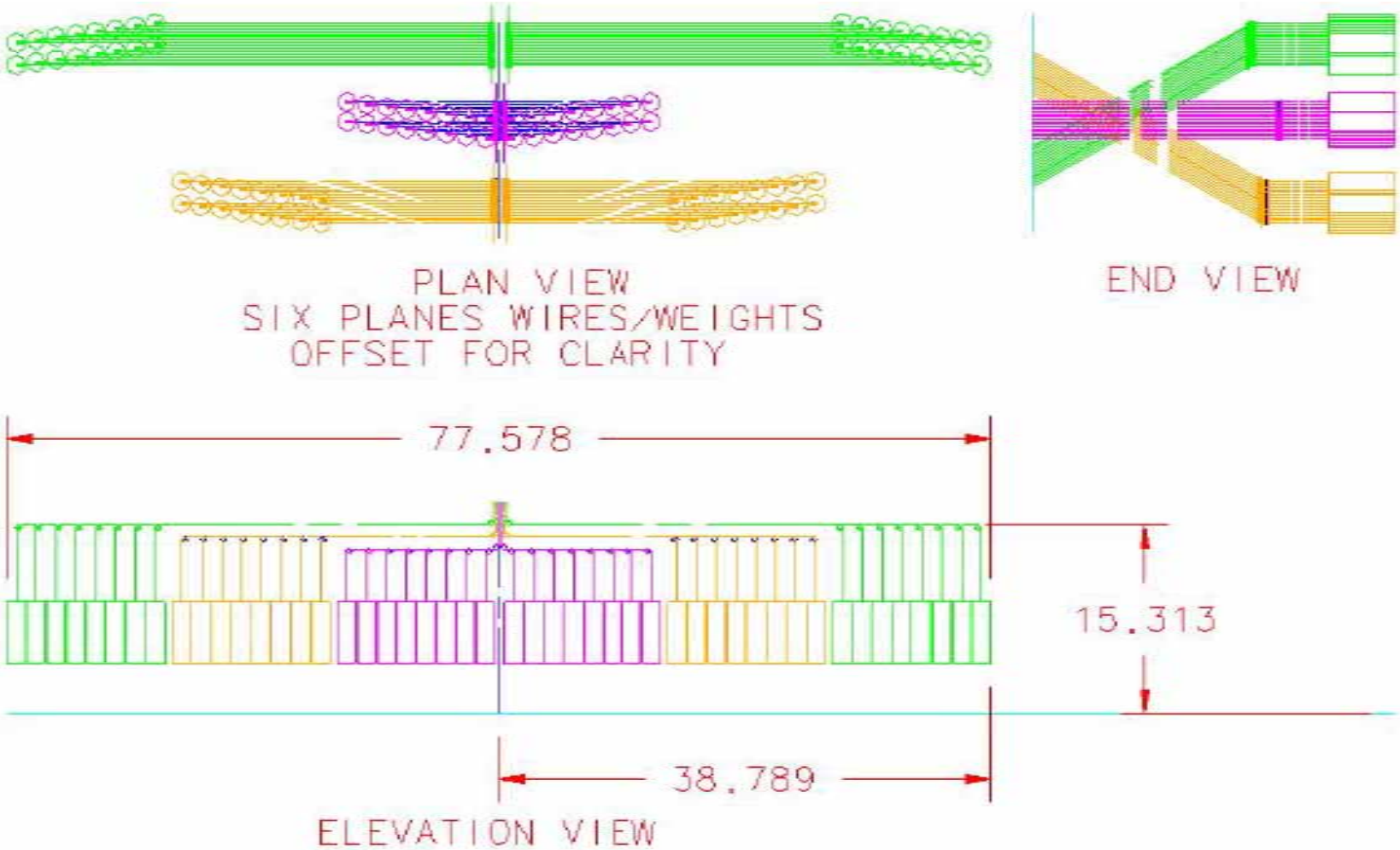

Stephen Pordes NUFACT 2005
docdb 302

Expanded view of wire arrangement at base of tank

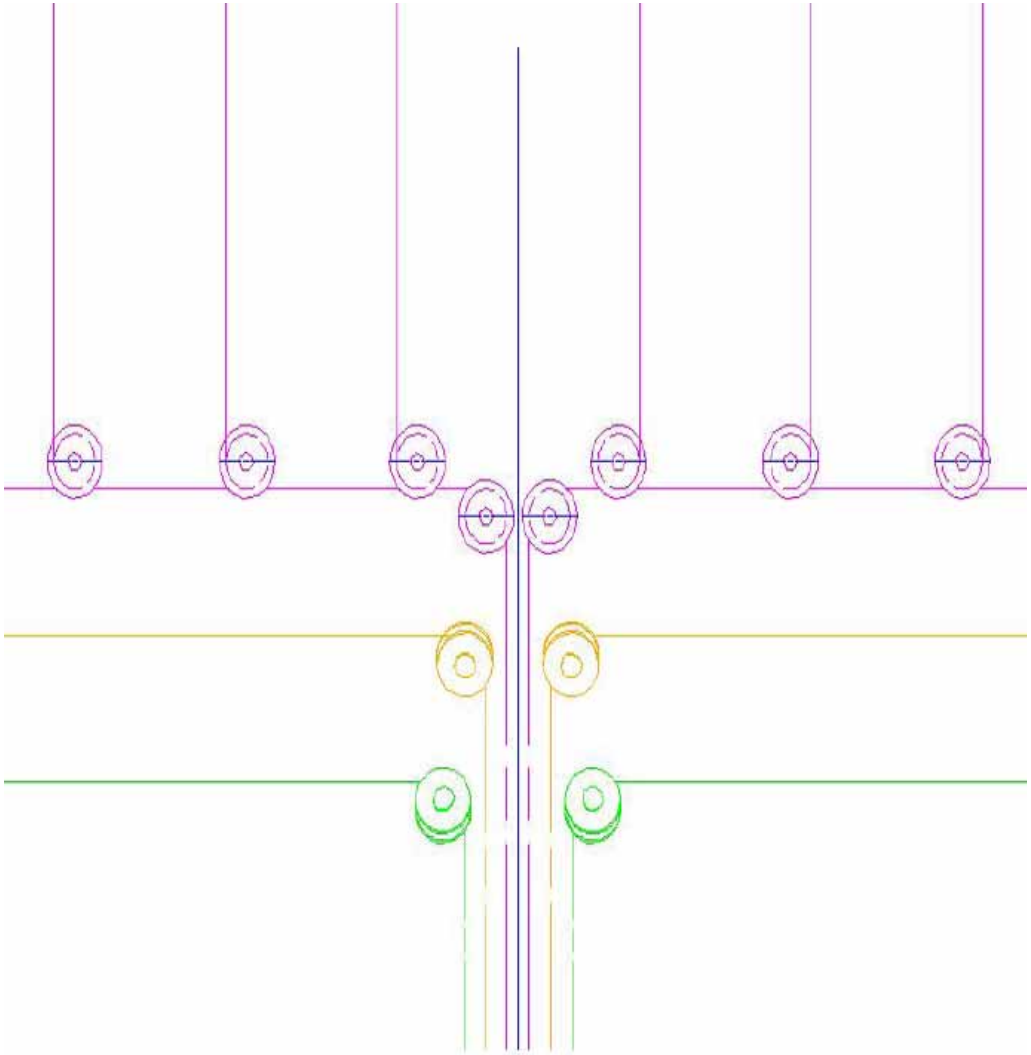

Stephen Pordes NUFACT 2005
docdb 302

LArTPC 50KT. DOME
with deck support columns

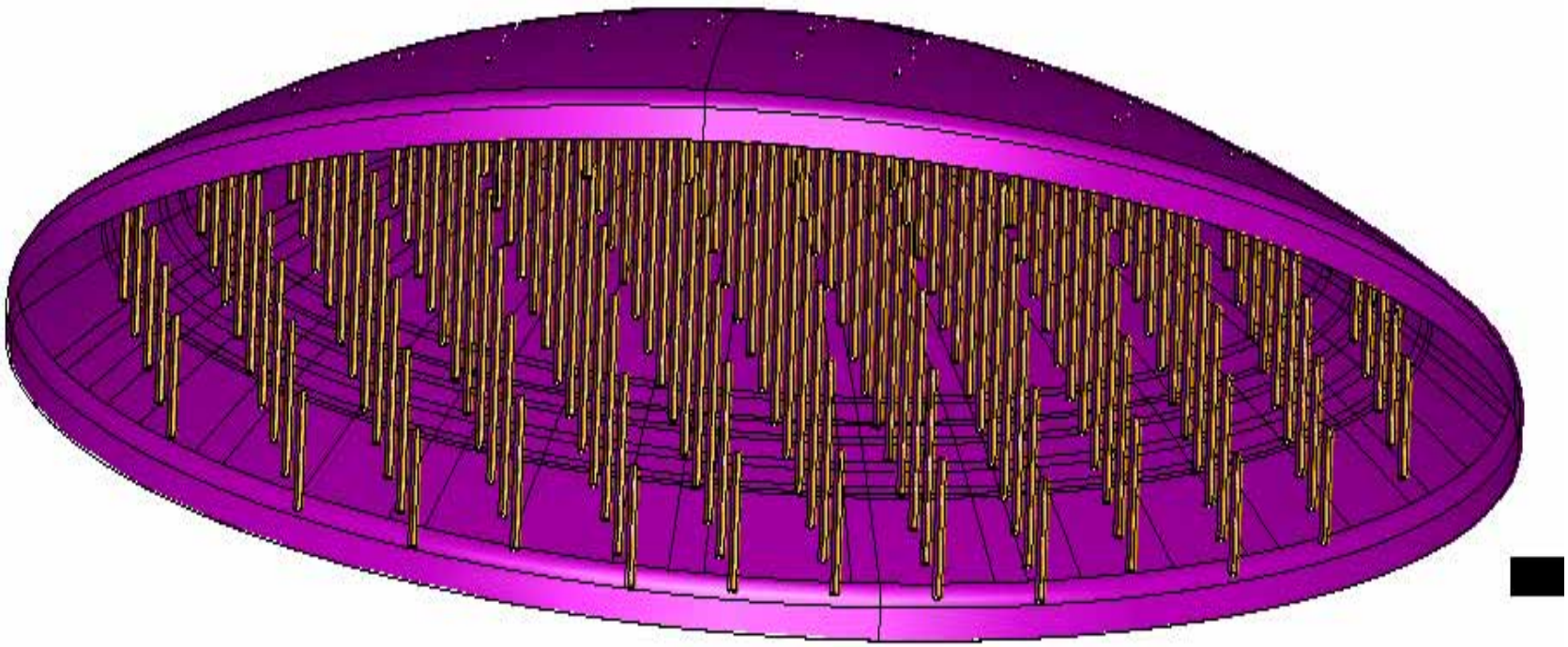

Hans Jostlein, May 13 2006, LAr group meeting
docdb 155 Jostlein_bigtank.ppt

Yury's Clever Wire Layout

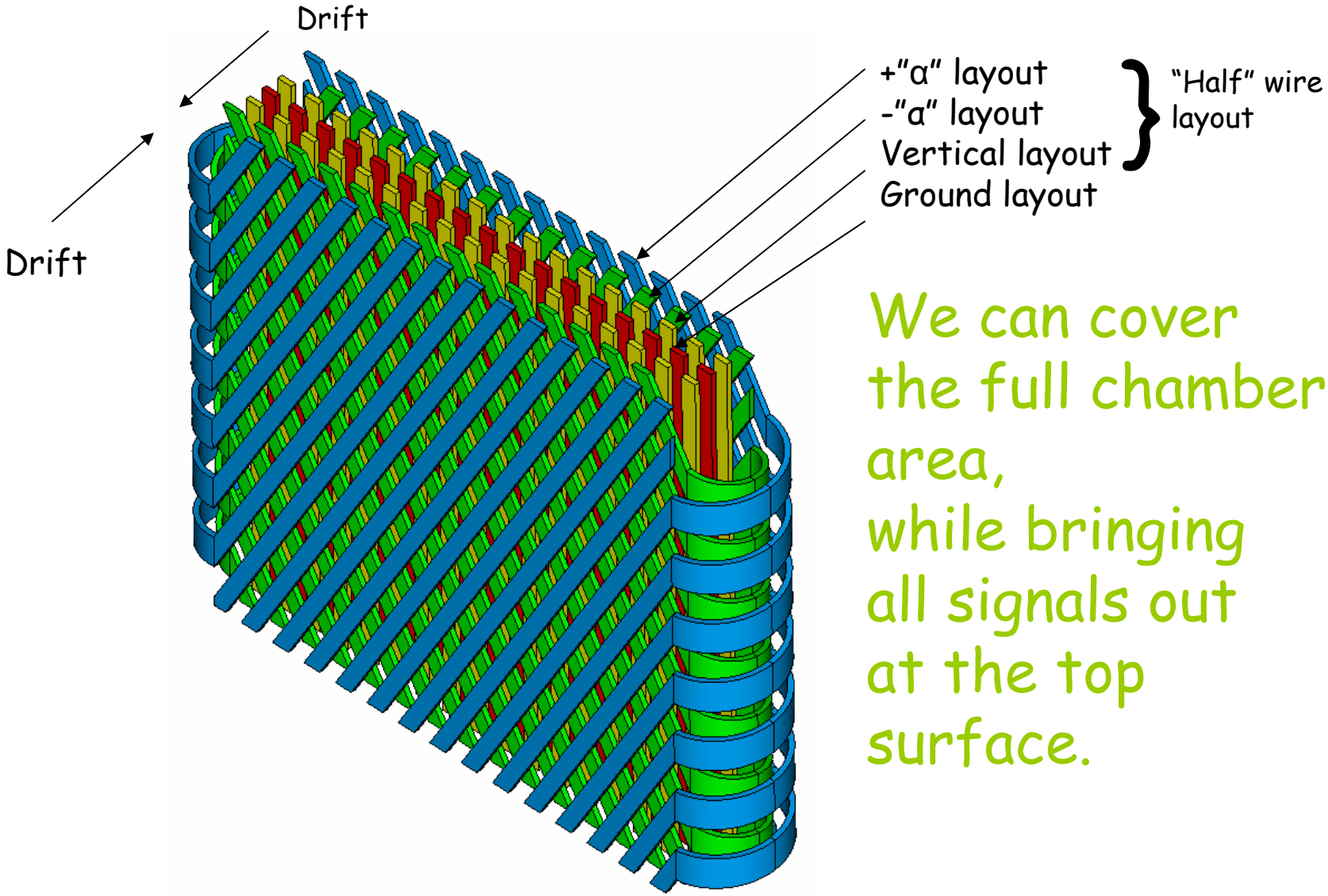

We can cover the full chamber area, while bringing all signals out at the top surface.

Hans Jostlein, May 13 2006, LAr group meeting
docdb 155 Jostlein_bigtank.ppt

Cellular TPC Design Concept: Scaling wire panels

A 5 ton detector is a cylinder 5 meters high with diameter 1 meter.

A 150 ton detector is a cylinder 5 meters high with diameter 5 meters.

A 5 kton detector is a cylinder 17 meters high with diameter 17 meters

Etc etc, on to 100 kton, for example.

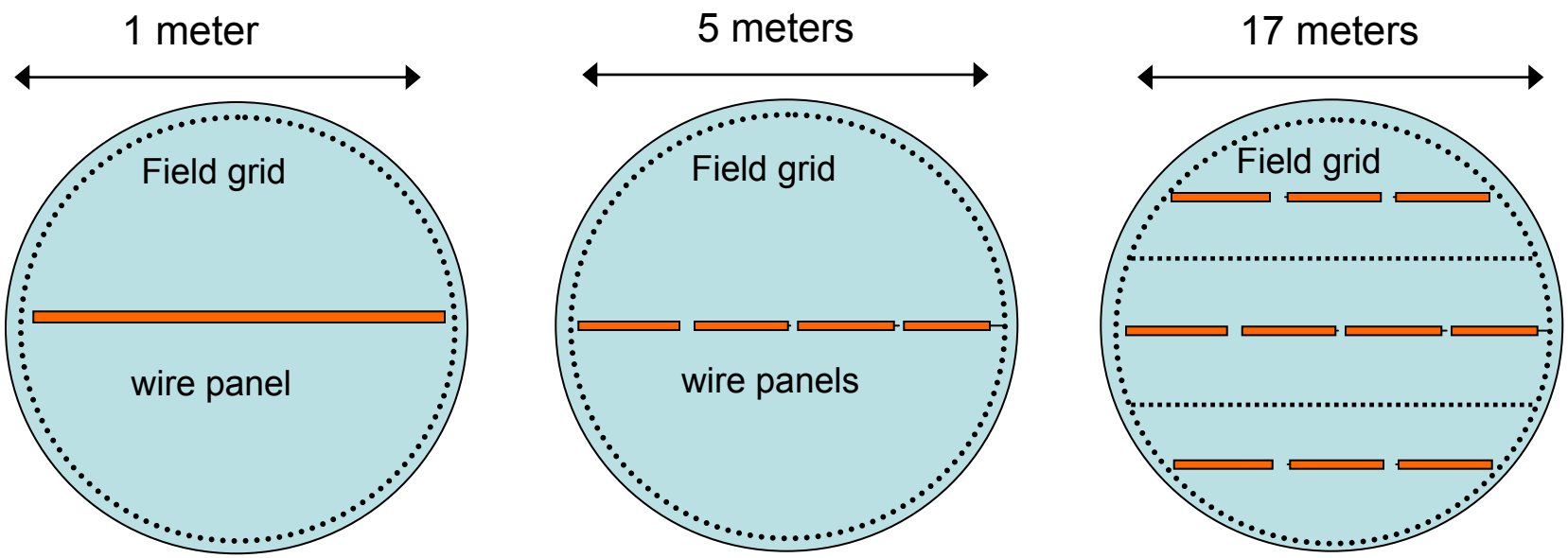

The transverse dimension is partly modular - more panels, similar drift distances.

Cellular TPC Design Concept: High Voltage distribution

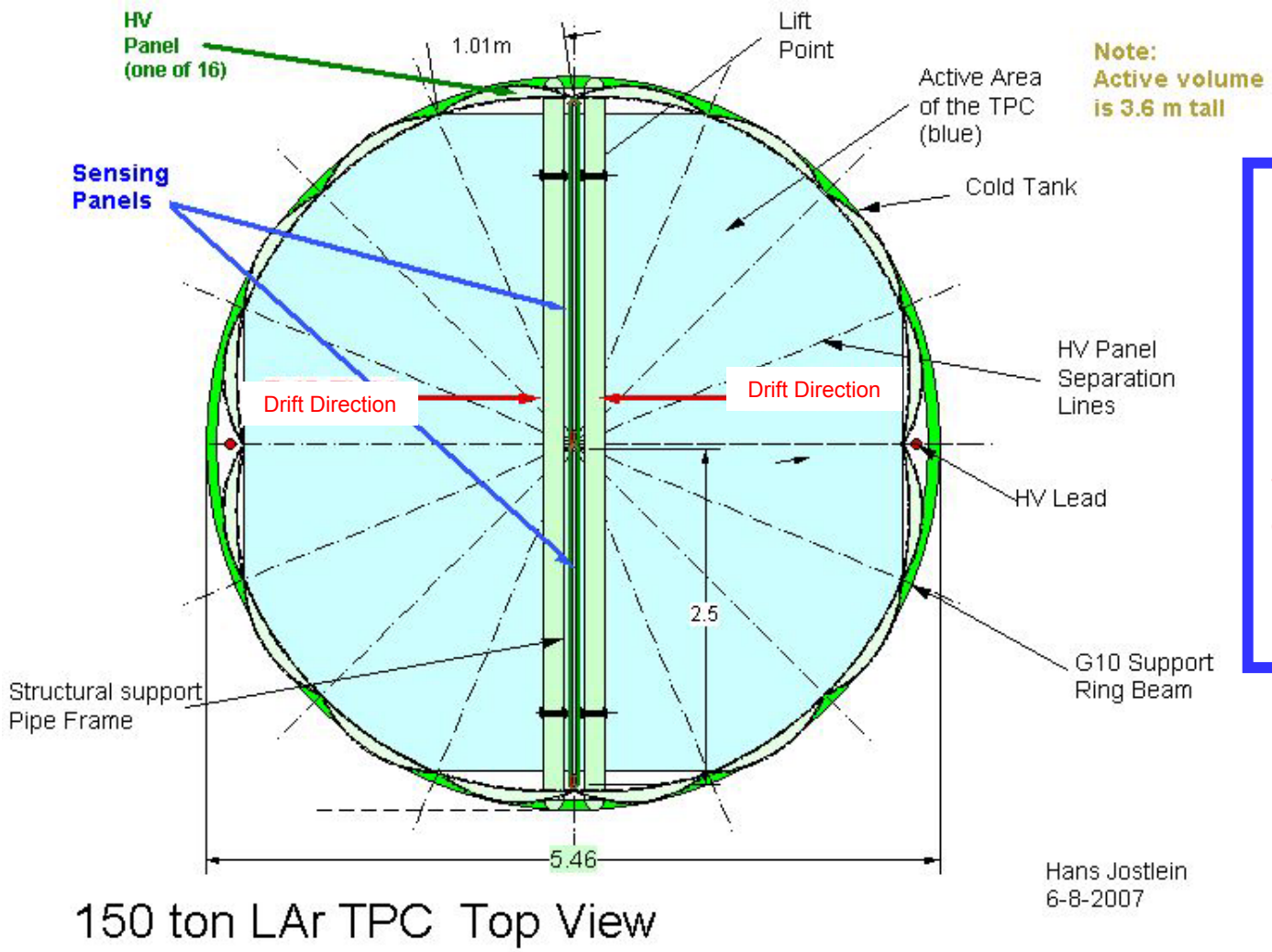

The drift field will be uniform if the voltage is distributed as cos(theta) on a surface located at a constant distance from the center.

Thermodynamics of Liquid Argon in Ideal Tank

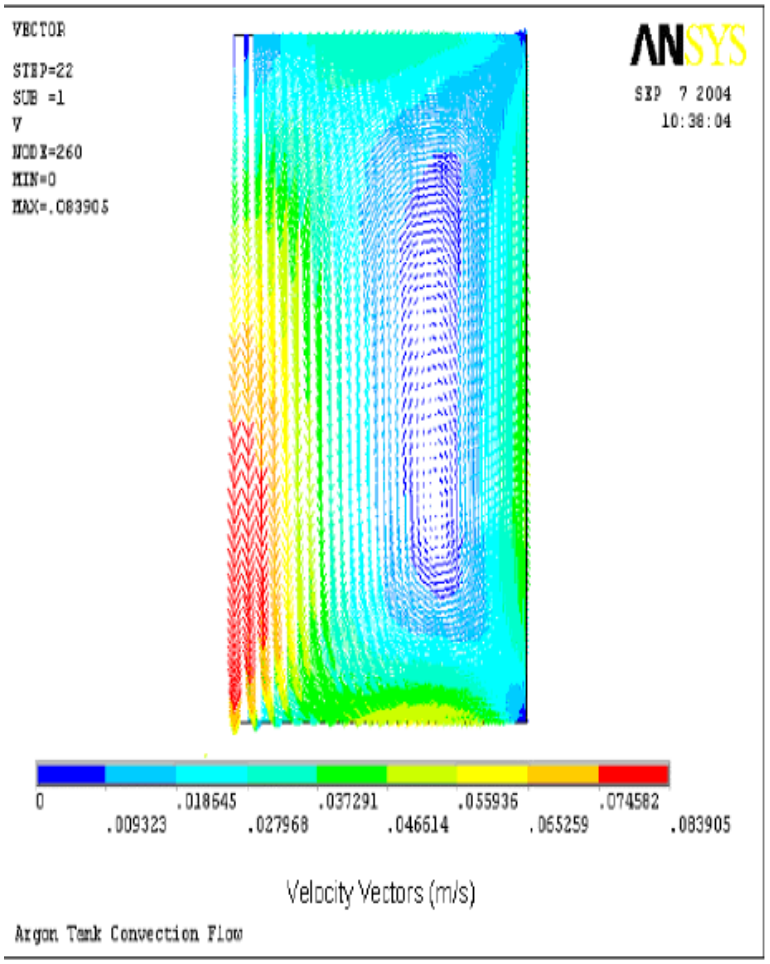

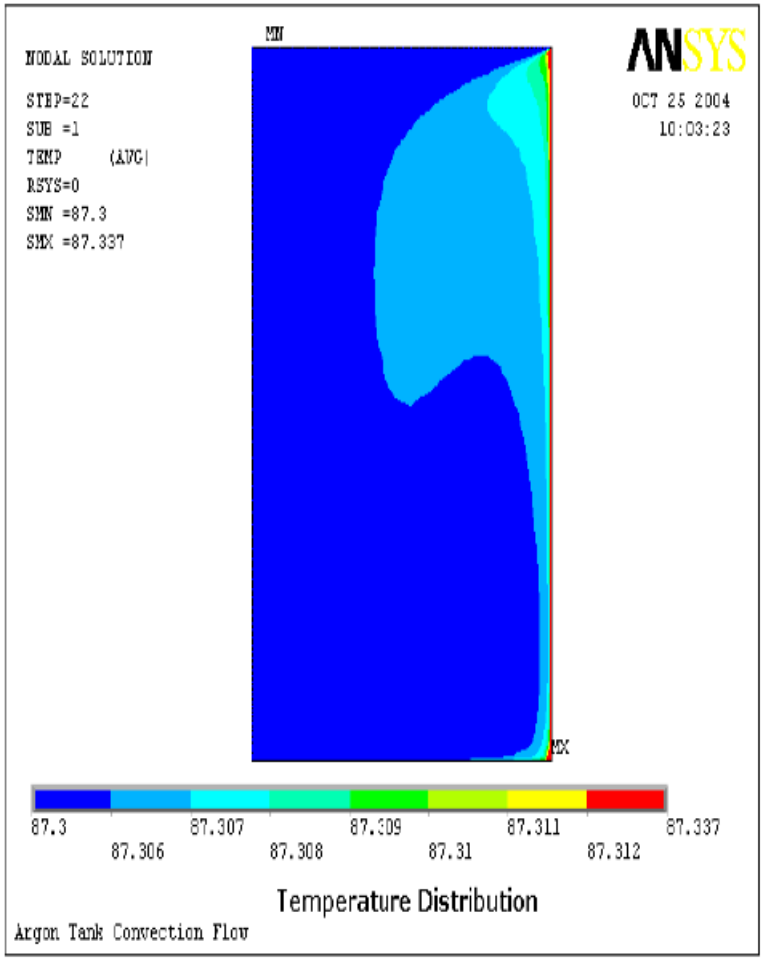

Liquid flow

Temperature

Stephen Pordes NUFACT 2005
docdb 302

NuSAG Recommendations

Recommendation 1. The US should prepare to proceed with a long baseline neutrino oscillation program to extend sensitivity to $\sin^2 2\theta_{13}$, to determine the mass ordering of the neutrino spectrum, and to search for CP violation in the neutrino sector. Planning and R&D should be ready for a technology decision and a decision to proceed when the next round of results on $\sin^2 2\theta_{13}$ becomes available, which could be as early as 2012. A review of the international program in neutrino oscillations and the opportunities for international collaboration should be included in the decision to proceed.

Recommendation 2. Research and development towards an intense, conventional neutrino beam suitable for these experiments should be supported. This R&D may be to support intensity upgrades to the existing NuMI beam, as well as development of a new beam directed towards DUSEL, which would likely employ the wide-band beam approach.

Recommendation 3. Research and development required to build a large water Cherenkov detector should be supported, particularly addressing questions of minimum required photocathode coverage, cost, and timescale.

Recommendation 4. A phased R&D program with milestones and using a technology suitable for a 50-100 kton detector is recommended for the liquid argon detector option. Upon completion of the existing R&D project to achieve purity sufficient for long drift times, to design low noise electronics, and to qualify materials, construction of a test module that could be exposed to a neutrino beam is recommended.

Milind Diwan at NNN07 Hamamatsu Japan October 4, 2007
http://www-rccn.icrr.u-tokyo.ac.jp/NNN07/

Liquid Argon TPC Overview for NuSAG

Note: At this point in time ...

"15" could be "50"

"1" could be "3"

etc

The optimum choices depend on the goals.

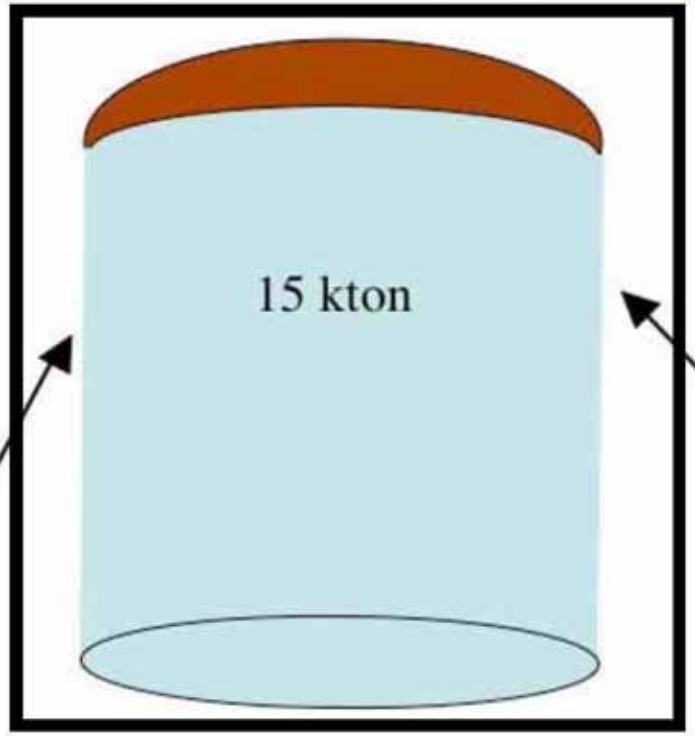

Submitted to NuSAG by the LArTPC group

Summer 2005

The "LArTPC group" is Fermilab plus 6 universities

Physics Development *using* ***existing*** *technology*
Record **complete neutrino interactions**: (ν_e & ν_μ)
Establish **Physics Collaboration**
Develop **Event Identification**,
Develop **Reconstruction**,
Develop **Analysis**,
Establish successful **Technology transfer**

Engineering Development:
Construction of Tank
Argon Purity
Mechanical Integrity of TPC
Readout S/N
Microphonics due to Argon Flow

Technical Setups

Purity Monitor Development	Materials Tests	5 m Drift Demonstration	Long Wires Tests	Electronics Development

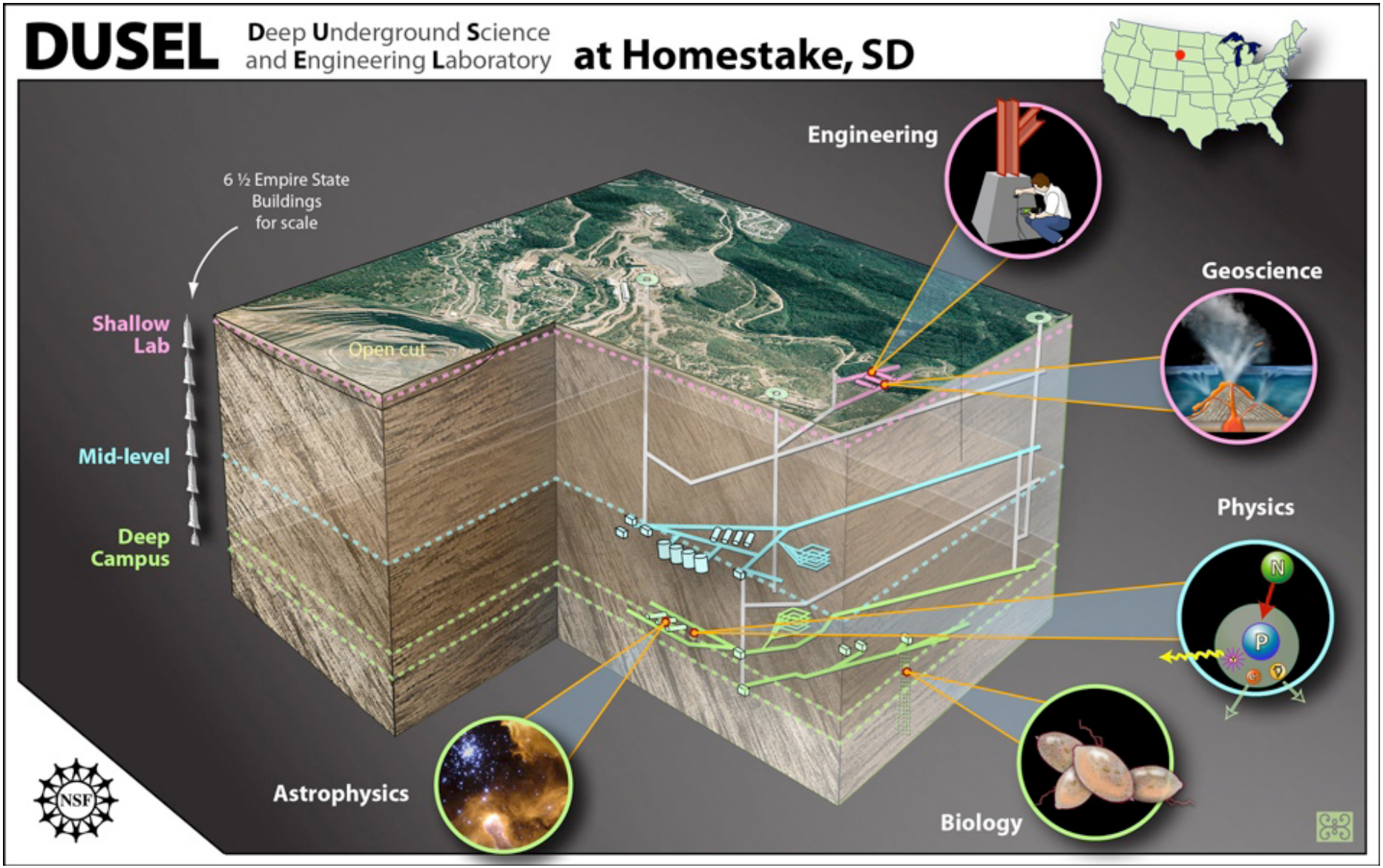

Milind Diwan at NNN07 Hamamatsu Japan October 4, 2007
http://www-rccn.icrr.u-tokyo.ac.jp/NNN07/

LANNDD: SCALING

N. of cells/side	1	2	3	4	6	8
Total N. of cells	1	8	27	64	216	512
Total LAr volume [10^3 m^3]	0.14	1.36	4.93	12.1	42.4	102
Active LAr volume [10^3 m^3]	0.14	1.27	4.49	10.9	35.9	86.9
Active LAr mass [KTon]	0.19	1.78	6.28	15.2	50.3	122
Total inner beam length [Km]	0.08	0.34	0.89	1.83	5.37	11.8
Total heat input [KW]	0.3	1.0	2.1	3.7	8.1	14
Equiv. LN_2 consumption [m^3/d]	0.18	0.63	1.36	2.36	5.2	9.1
Equiv. El. Power-Cooling [KW]	2.8	9.8	21	37	81	140
N. of wire chambers	1	2	3	4	24	32
N. of channels [10^3]	3.3	14	33	59	270	483
El. Power-Electronics [KW]	6	25	57	103	469	839

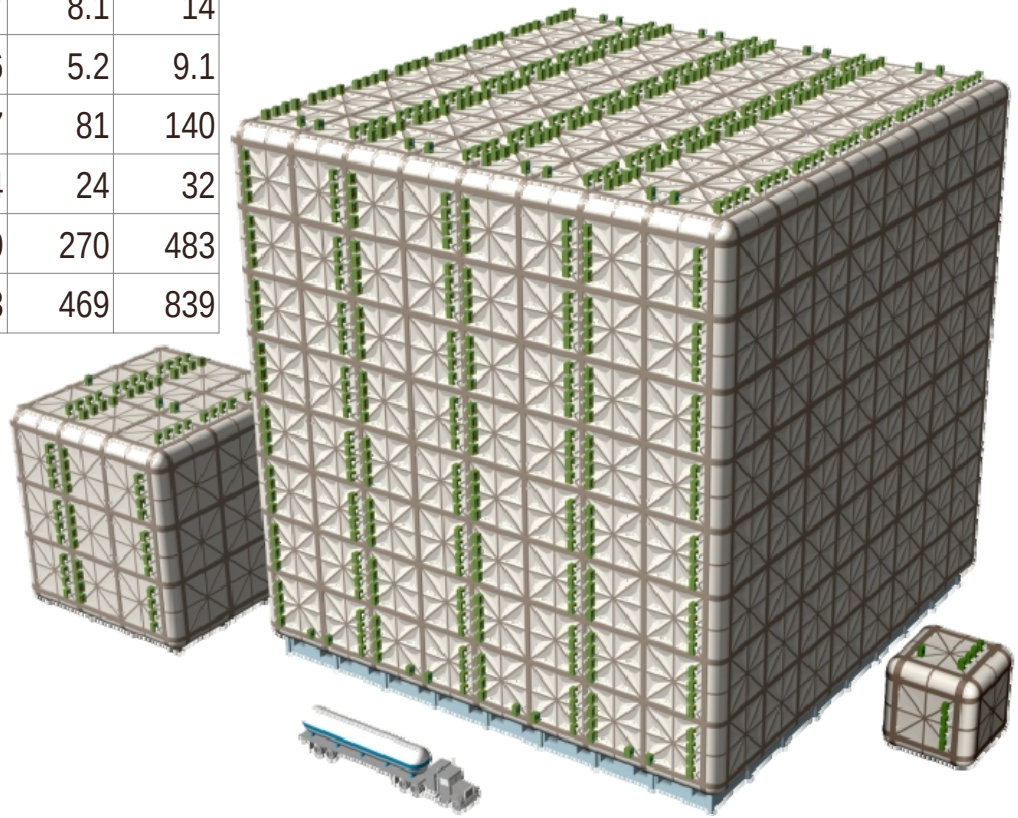

Purity Demonstration without evacuation

- The purpose is to demonstrate the feasibility of achieving the purity of liquid argon required for a 5kton TPC detector (as a specific example), explicitly without evacuation of the containment tank or the TPC, and to estimate the costs associated with the required purification system.

- A suitable demonstration, or a true prototype, could:
  - be at least ~150tons,
  - use a scaled down version of the proposed 5kton purification system,
  - have a fully functioning TPC,
  - be located in a neutrino beam (at Fermilab for example),
  - be on the surface (to understand impact of cosmic rays on the 5kton),
  - and measure all that neutrinos do in liquid argon.

- But (to be as cheap as possible), a first step can use a 20ton vessel.
  - Still must use a scaled down version of the purification required for 5ktons.
  - But: can be single wall containment vessel, constructed by industry, small enough to be delivered by highway, with the ability to put TPC materials in it (but a functioning TPC is not required).

- This 20ton step has been designed and costed: ~$310,000 to buy the equipment, assemble it and do the demonstration. It can be done in less than a year.

GLACIER: A 100 kton liquid Argon TPC detector

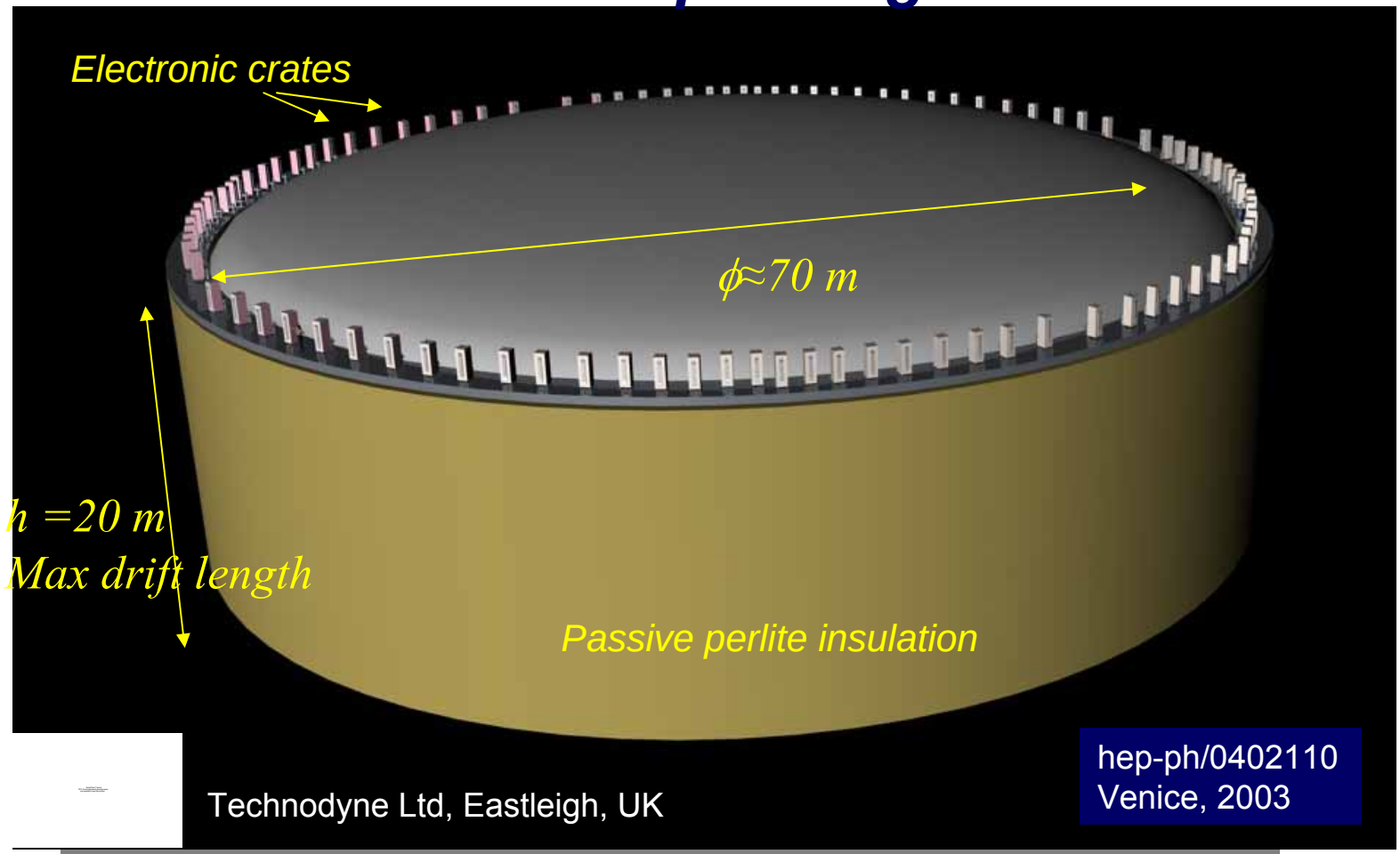

Single module cryo-tanker based on industrial LNG technology

A "general-purpose" detector for superbeams, beta-beams and neutrino factories with broad non-accelerator physics program (SN ν, p-decay, atm ν, …)

Andre Rubbia: cryodet1 workshop March 2006 at LNGS
http://cryodet.lngs.infn.it/march2006/

A scalable design: 10 kton prototype

- 10% full-scale prototype
- Shallow depth
- **Physics program on its own** (e.g. sensitivity for $p \rightarrow \nu K$: $\tau > 10^{34}$ yrs for 10 years running)
- Complementary to SuperK

Dewar	$\phi \approx 30$ m, height ≈ 10 m, perlite insulated, heat input ≈ 5 W/m^2
Argon storage	Boiling Argon, low pressure (<100 mbar overpressure)
Argon total volume	7000 m^3, ratio area/volume $\approx$ 33%
Argon total mass	9900 tons
Hydrostatic pressure at bottom	1.5 atmospheres
Inner detector dimensions	Disc f $\approx$30 m located in gas phase above liquid phase
Charge readout electronics	30000 channels, 30 racks on top of the dewar
Scintillation light readout	Yes (also for triggering), 300 immersed 8" PMTs with WLS

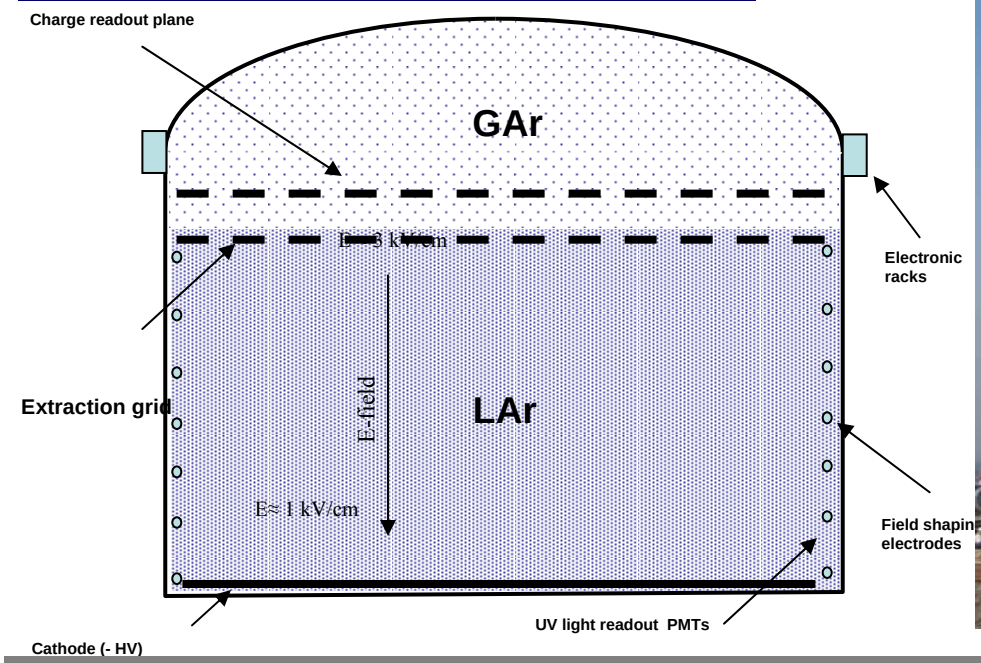

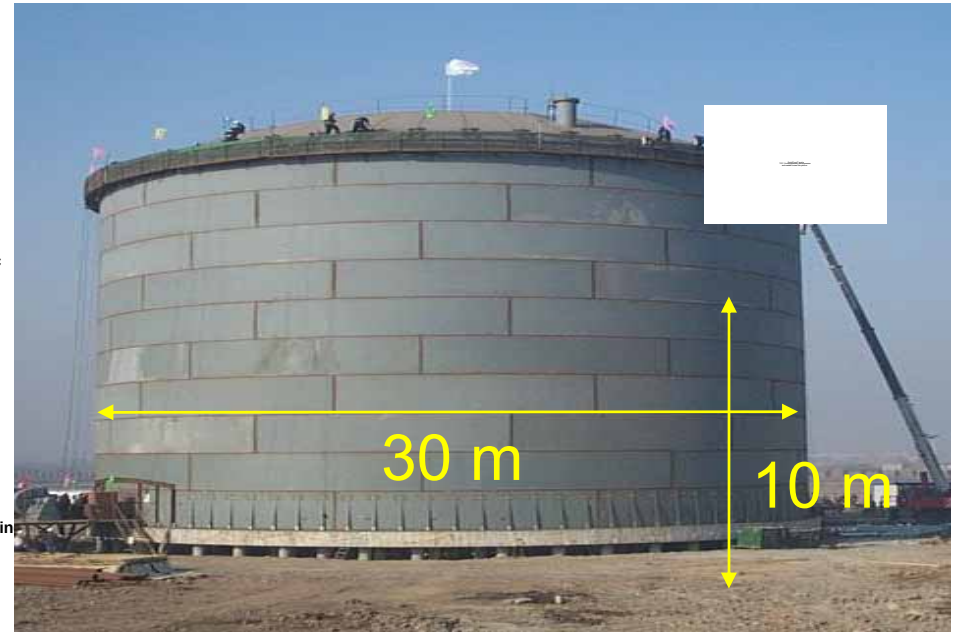

- 1% prototype: 1 kton engineering detector, $\phi \approx 10$m, h $\approx$ 10m, shallow depth?

Andre Rubbia: cryodet1 workshop March 2006 at LNGS
http://cryodet.lngs.infn.it/march2006/

Proposal for 100kton design effort

- Carry Cellular Design to a level that can:
  - assess the feasibility of 100kton LArTPC “big tank” approaches
  - produce a cost range and cost optimization
  - identify risks and list essential R&D items
  - (This is a step beyond the level of the ~2005 FLARE design)

- Compare Cellular Design to GLACIER design.
  - Cellular design and GLACIER design differ in the way they collect electrons and photons.
  - GLACIER design and Cellular Design have common issues with containment tank, Argon purification, safety.

- Physics directions drive technical requirements.
  - Nucleon decay: light trigger & underground assumed
  - Neutrino oscillations (with and/or without accelerators):
    - surface / shallow & cosmic rays
  - Supernovae: low energy neutrinos (few 10s MeV)

Afterthought: Once the above is done, perhaps then perhaps compare to “LANND-like MODULAr (i.e., evacuated) approaches for cost / risk … and perhaps to H2O-based detectors … for the same physics directions.