REV	DESCRIPTION	DRAWN / DATE APPROVED / DATE

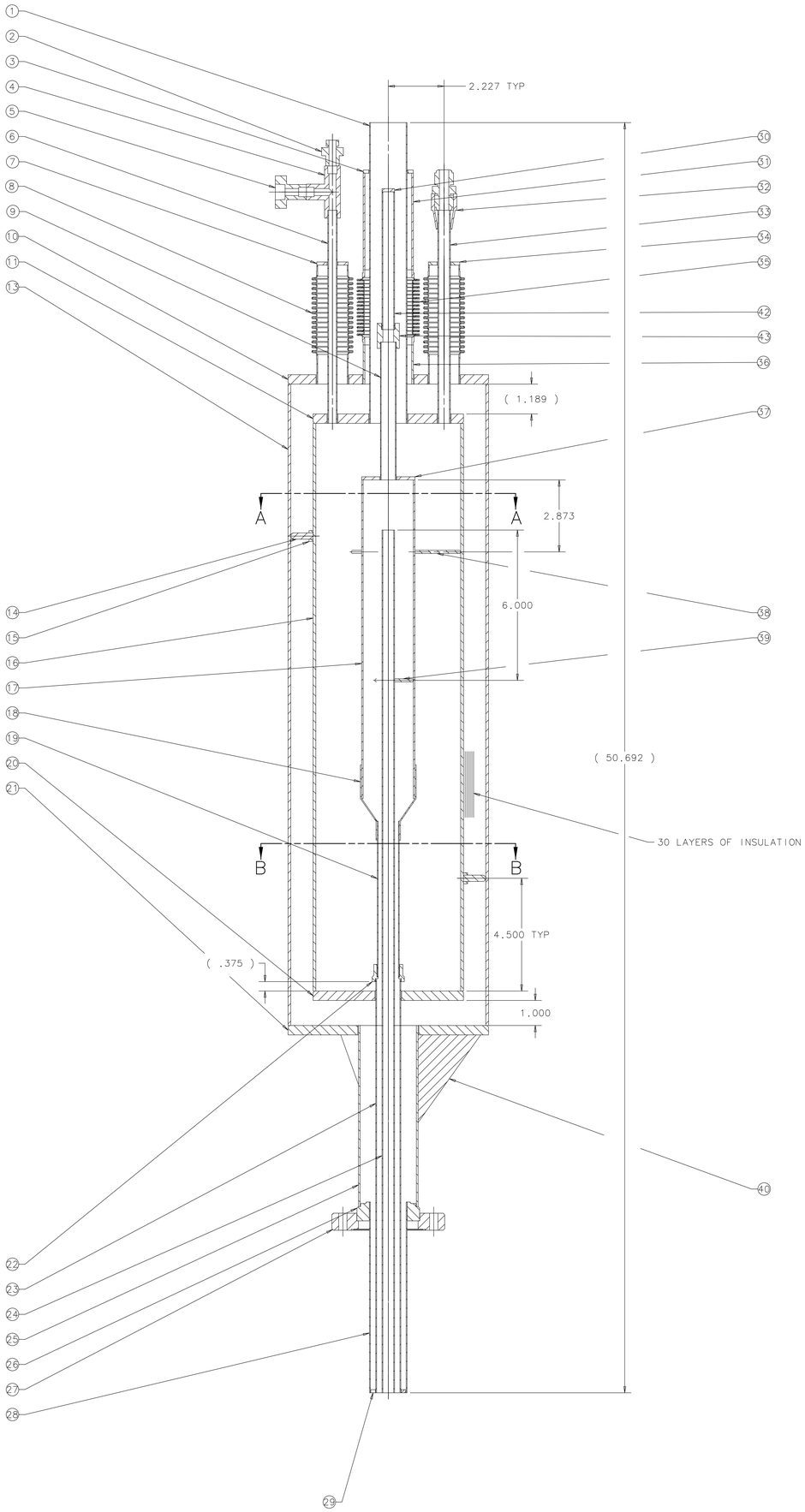

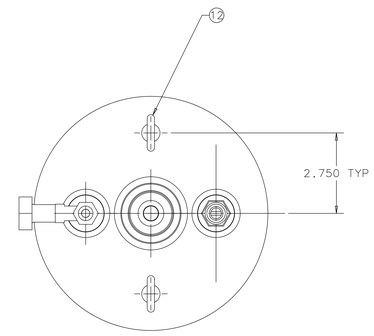

TOP

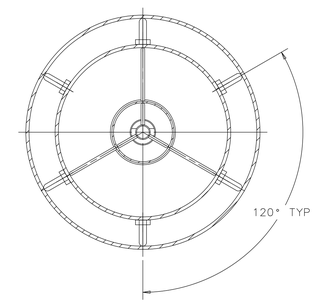

SECTION A-A

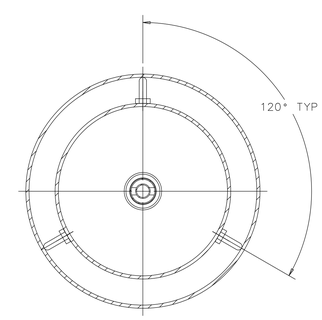

SECTION B-B

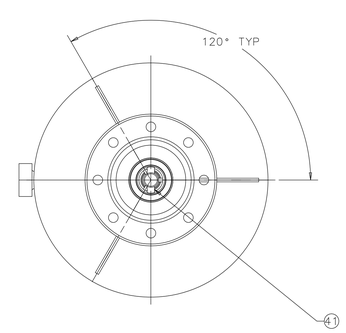

BOTTOM

ITEM	PART NO.	DESCRIPTION OR SIZE	QTY
43	MA-381169	ADAPTER, TRANSITION	1
42		TUBE, ø1/2" OD X .035W X 5.50 LG, WELDED, SST, ASTM A249	1
41	MA-381157	SUPPORT, TABS	2
40	MA-381152	GUSSET	3
39	MA-381163	STAND-OFF, ARGON	3
38	MA-381162	STAND-OFF, COPPER SHELL	3
37	MA-381170	CAP, COPPER SHELL	1
36		TUBE, ø2" OD X .065W X 1.56 LG, WELDED, 304 SST, ASTM A249	1
35	2922-MB-31376	BELLOWS	1
34	MA-381164	CAP, N2 BELLOWS	1
33		TUBE, ø1/2" OD X .035W X 8.50 LG, WELDED, 304 SST, ASTM A249	1
32	AEROQUIP	FITTING, FLARE BODY #2027T-8-8S, SLEEVE #900605-8-8S, NUT #1290-8-8S	1 EA
31		TUBE, ø2" OD X .065W X 3.85 LG, WELDED, 304 SST, ASTM A249	1
30		CAP, ø1/2 X 1/8 THICK	1
29	MA-381168	CAP, BOTTOM	1
28		TUBE, ø1-1/2" OD X .035W X 7.61 LG, WELDED, 304 SST, ASTM A249	1
27	VARIAN #F04500250NC4	FLANGE, CONFLAT, ø4-1/2OD X ø2-1/2ID	1
26	MA-381153	ADAPTER	1
25		PIPE, 2" IPS, SCH 5, 7.226" LG, WELDED, 304 SST, A312	1
24		TUBE, ø1/2" OD X .035W X 34.43 LG, WELDED, 304 SST, ASTM A249	1
23		TUBE, ø1" OD X .035W X 16.53 LG, WELDED, 304 SST, ASTM A249	1
22	MA-381155	UNION	1
21	MB-381159	CAP, OUTER SHELL, TOP	1
20	MB-381161	CAP, INNER SHELL, BOTTOM	1
19		TUBE, COPPER, ø7/8" OD (ø3/4 NOM.) X .032W X 6.211" LG, TYPE M	1
18	MUELLEER BRASS # W-1077	REDUCER, COPPER	1
17		TUBE, COPPER, ø2-1/8" OD (ø2" NOM.) X .058W X 12.71" LG, TYPE M	1
16		TUBE, ø6" OD X .109W X 22.65 LG, WELDED, 304 SST, ASTM A249	1
15		NUT, 1/4-20, SST	6
14	MA-381167	STAND-OFF, G10	6
13		TUBE, ø8" OD X .109W X 25.59" LG, WELDED, 304 SST, ASTM A249	1
12	MA-381154	EYEBOLT, MODIFIED, GRAINGER #20692	2
11	MB-381160	CAP, INNER SHELL, TOP	1
10	MB-381158	CAP, OUTER SHELL, TOP	1
9		TUBE, ø1/2" OD X .035W X 5.50 LG, COPPER, TYPE M	1
8	6065-MC-211099	BELLOWS	2
7	MA-381166	CAP, LEVEL PROBE BELLOWS	1
6		TUBE, ø3/8" OD X .035W X 8.50 LG, WELDED, 304 SST, ASTM A249	1
5	SWAGELOK #SS-6-TSW-7-4	CONNECTOR, FEMALE, BUTTWELD	1
4	SWAGELOK #SS-6-TSW-3	TEE, UNION, BUTTWELD	1
3	MA-381165	CAP, TOP	1
2	MA-381156	CONNECTOR, PIPE, MALE, BUTTWELD MODIFIED, SWAGELOK #SS-400-1-4W	1
1		TUBE, ø1-1/2" OD X .035W X 12.00 LG, WELDED, 304 SST, ASTM A249	1

BILL OF MATERIAL

UNLESS OTHERWISE SPECIFIED			ORIGINATOR	BEN HANSEN	7.30.04
.XX	.XXX	ANGLES	DRAWN	Robert Hibbard	8.16.04
± .02	± .005	± .5°	CHECKED		
			APPROVED		

1. BREAK ALL SHARP EDGES 1/64 MAX.
2. DO NOT SCALE DRAWING.
3. DIMENSIONS BASED UPON Asme Y14.5M-1994
4. MAX ALL MACH SURFACES 125

USED ON

MATERIAL
SEE BILL OF MATERIAL

FERMI NATIONAL ACCELERATOR LABORATORY
UNITED STATES DEPARTMENT OF ENERGY

BEAMS CRYOGENIC SYSTEMS FLARE CONDENSER ASSEMBLY

SCALE	FILMED	DRAWING NUMBER	REV
1/2		1650-ME-381151	

CREATED WITH I-DEAS 8m2

-- REDUCED COPY - DO NOT SCALE --

REV	DESCRIPTION	DRAWN / DATE
		APPROVED / DATE

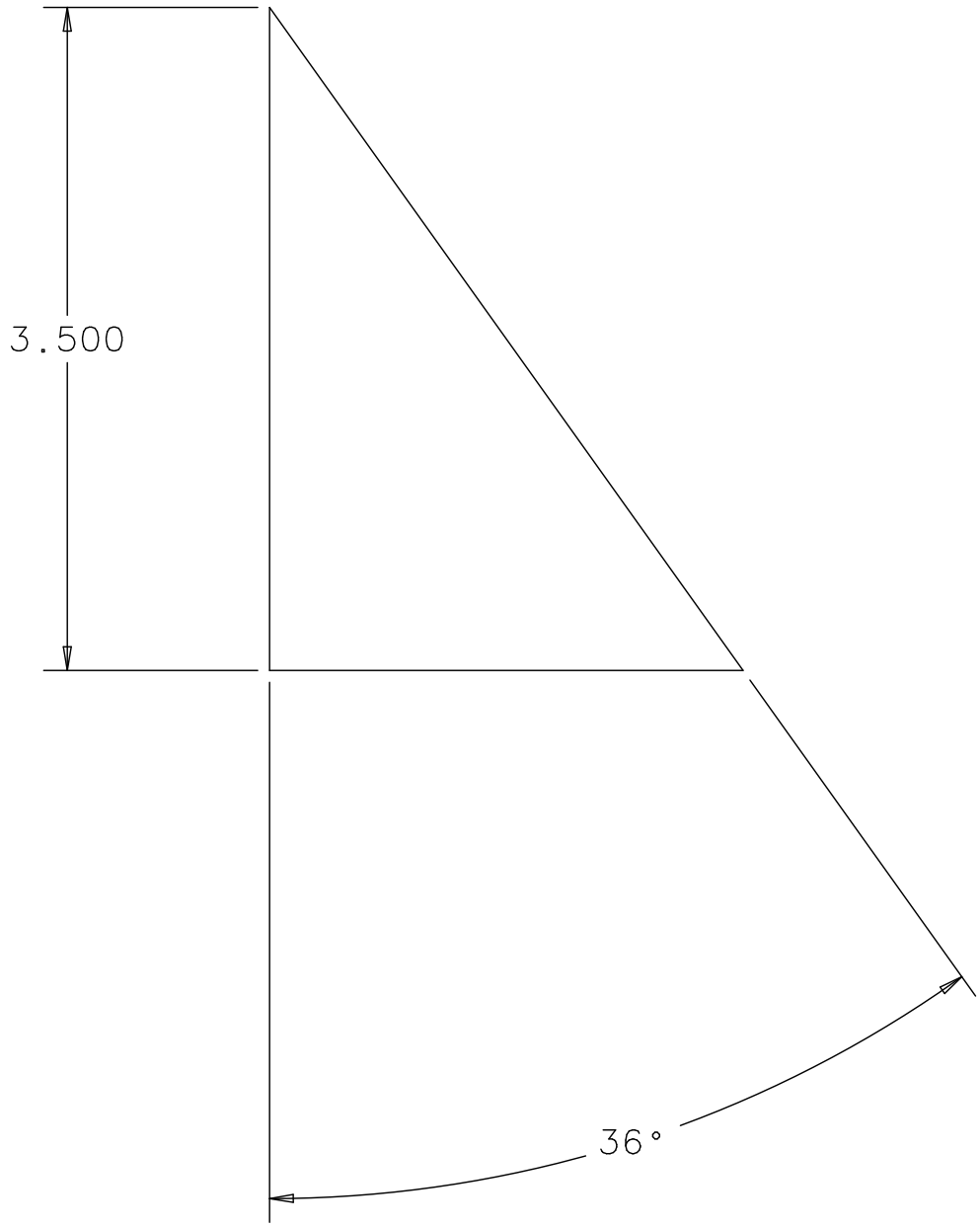

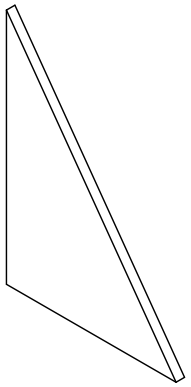

UNLESS OTHERWISE SPECIFIED			ORIGINATOR	BEN HANSEN	7.30.04
.XX	.XXX	ANGLES	DRAWN	Robert Hibbard	8.16.04
± .02	± .005	± .5°	CHECKED		
1. BREAK ALL SHARP EDGES 1/64 MAX.			APPROVED		
2. DO NOT SCALE DRAWING.			USED ON	ME-381151	
3. DIMENSIONS BASED UPON ASME Y14.5M-1994					
4. MAX ALL MACH SURFACES 125			MATERIAL	1/4" THICK SST	

FERMI NATIONAL ACCELERATOR LABORATORY

UNITED STATES DEPARTMENT OF ENERGY

BEAMS CRYOGENIC SYSTEMS GUSSET FLARE CONDENSER

SCALE	FILMED	DRAWING NUMBER	REV
FULL		1650-MA-381152	

CREATED WITH I-DEAS 8m2

Created: 16:56:49 on 23-10-07 (D-M-Y) By: hibbard State: 1-INITIAL

REV	DESCRIPTION	DRAWN / DATE
		APPROVED / DATE

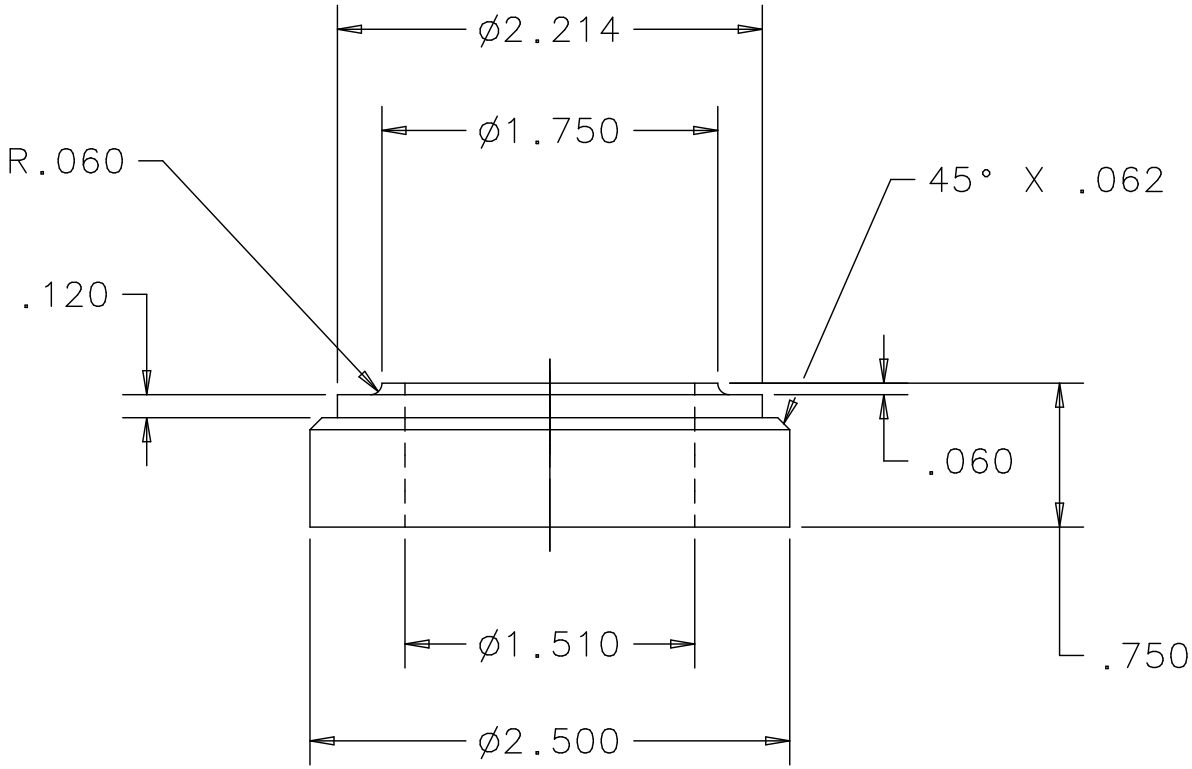

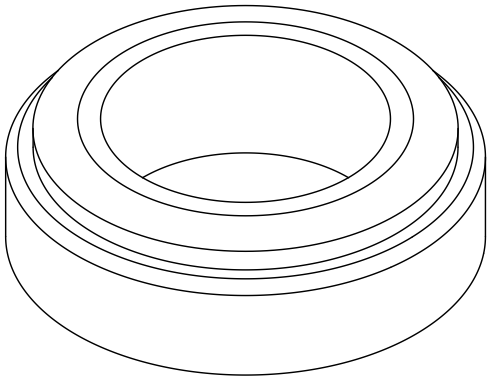

UNLESS OTHERWISE SPECIFIED			ORIGINATOR	BEN HANSEN	7.30.04
.XX	.XXX	ANGLES	DRAWN	Robert Hibbard	8.16.04
± .02	± .005	± .5°	CHECKED		
1. BREAK ALL SHARP EDGES 1/64 MAX.			APPROVED		
2. DO NOT SCALE DRAWING.			USED ON	1650-ME-381151	
3. DIMENSIONS BASED UPON ASME Y14.5M-1994					
4. MAX ALL MACH SURFACES 125			MATERIAL	STAINLESS STEEL, TYPE 304	

FERMI NATIONAL ACCELERATOR LABORATORY

UNITED STATES DEPARTMENT OF ENERGY

BEAMS CRYOGENIC SYSTEMS FLARE CONDENSER ASSEMBLY ADAPTER, KF FLANGE

SCALE	FILMED	DRAWING NUMBER	REV
FULL		1650-MA-381153	

CREATED WITH I-DEAS 8m2

Created: 16:54:02 on 23-10-07 (D-M-Y) By: hibbard State: 1-INITIAL

REV	DESCRIPTION	DRAWN / DATE
		APPROVED / DATE

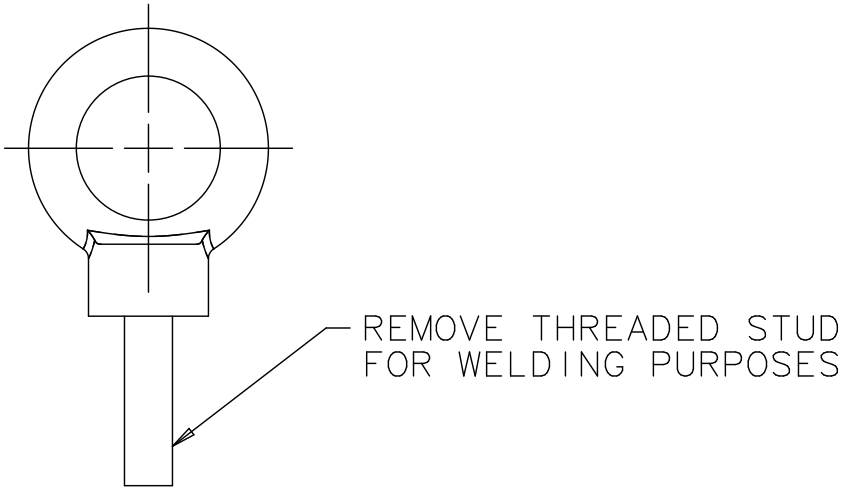

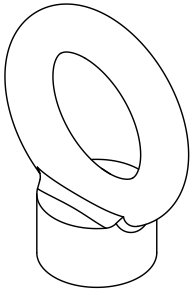

UNLESS OTHERWISE SPECIFIED			ORIGINATOR	BEN HANSEN	7.30.04
.XX	.XXX	ANGLES	DRAWN	Robert Hibbard	8.16.04
± .02	± .005	± .5°	CHECKED		
1. BREAK ALL SHARP EDGES 1/64 MAX.			APPROVED		
2. DO NOT SCALE DRAWING.			USED ON	1650-ME-381151	
3. DIMENSIONS BASED UPON ASME Y14.5M-1994					
4. MAX ALL MACH SURFACES 125			MATERIAL	GRAINGER #2G692	

FERMI NATIONAL ACCELERATOR LABORATORY

UNITED STATES DEPARTMENT OF ENERGY

BEAMS CRYOGENIC SYSTEMS EYEBOLT (MODIFIED) FLARE CONDENSER ASSEMBLY

SCALE	FILMED	DRAWING NUMBER	REV
FULL		1650-MA-381154	

CREATED WITH I-DEAS 8m2

Created: 16:51:43 on 23-10-07 (D-M-Y) By: hibbard State: 1-INITIAL

REV	DESCRIPTION	DRAWN / DATE
		APPROVED / DATE

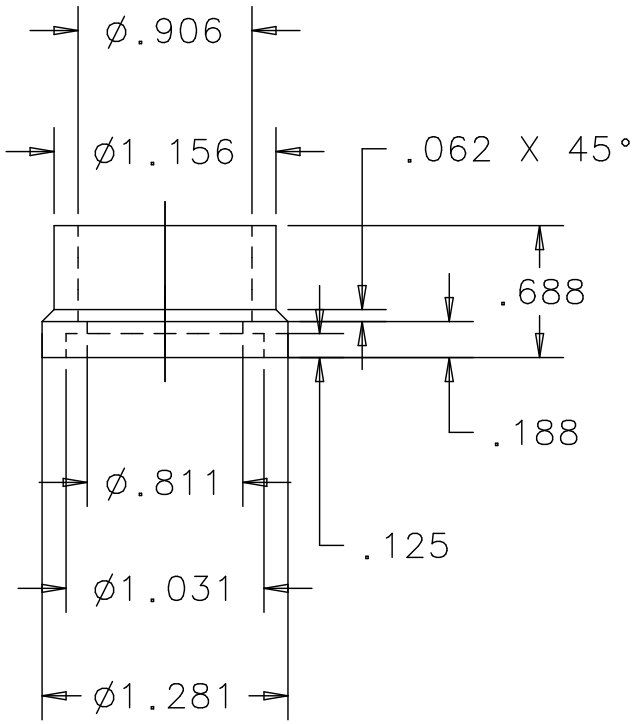

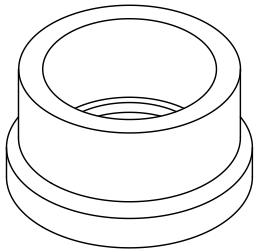

UNLESS OTHERWISE SPECIFIED			ORIGINATOR	BEN HANSEN	7.30.04
.XX	.XXX	ANGLES	DRAWN	Robert Hibbard	8.16.04
± .02	± .005	± .5°	CHECKED		
1. BREAK ALL SHARP EDGES 1/64 MAX.			APPROVED		
2. DO NOT SCALE DRAWING.			USED ON	1650-ME-381151	
3. DIMENSIONS BASED UPON ASME Y14.5M-1994					
4. MAX ALL MACH SURFACES 125			MATERIAL	STAINLESS STEEL, TYPE 304	

FERMI NATIONAL ACCELERATOR LABORATORY

UNITED STATES DEPARTMENT OF ENERGY

BEAMS CRYOGENIC SYSTEMS UNION FLARE CONDENSER ASSEMBLY

SCALE	FILMED	DRAWING NUMBER	REV
FULL		1650-MA-381155	

CREATED WITH I-DEAS 8m2

Created: 16:53:31 on 23-10-07 (D-M-Y) By: hibbard State: 1-INITIAL

REV	DESCRIPTION	DRAWN / DATE
		APPROVED / DATE

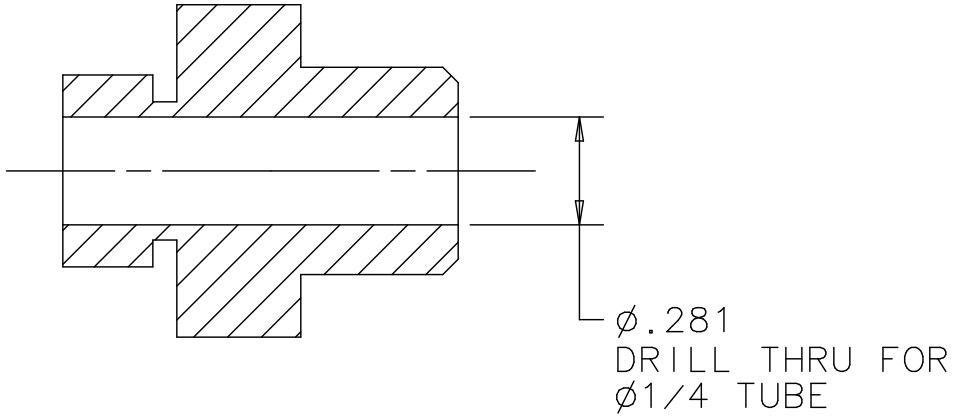

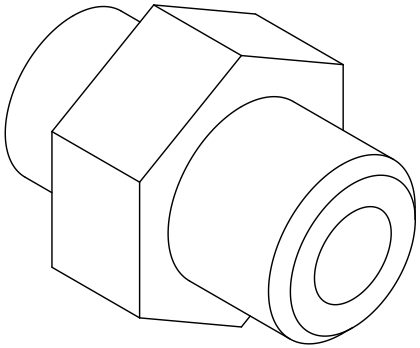

UNLESS OTHERWISE SPECIFIED			ORIGINATOR	BEN HANSEN	7.30.04
.XX	.XXX	ANGLES	DRAWN	Robert Hibbard	8.18.04
± .02	± .005	± .5°	CHECKED		
1. BREAK ALL SHARP EDGES 1/64 MAX.			APPROVED		
2. DO NOT SCALE DRAWING.			USED ON	1650-ME-381151	
3. DIMENSIONS BASED UPON ASME Y14.5M-1994					
4. MAX ALL MACH SURFACES 125			MATERIAL	SWAGELOK #SS-400-1-4W	

FERMI NATIONAL ACCELERATOR LABORATORY

UNITED STATES DEPARTMENT OF ENERGY

BEAMS CRYOGENIC SYSTEMS CONNECTOR, PIPE, MALE, MODIFIED FLARE CONDENSER ASSEMBLY

SCALE	FILMED	DRAWING NUMBER	REV
2:1		1650-MA-381156	

CREATED WITH I-DEAS 8m2

Created: 16:48:47 on 23-10-07 (D-M-Y) By: hibbard State: 1-INITIAL

REV	DESCRIPTION	DRAWN / DATE
		APPROVED / DATE

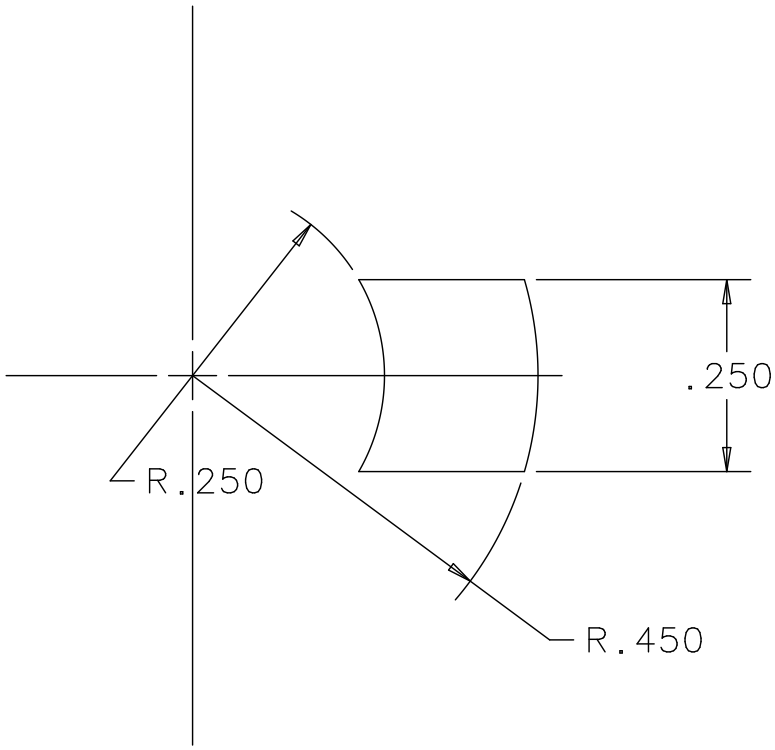

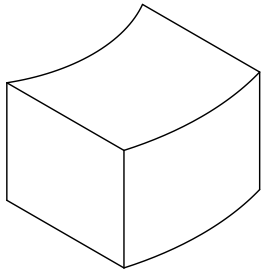

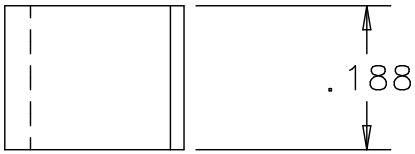

UNLESS OTHERWISE SPECIFIED			ORIGINATOR	BEN HANSEN	7.30.04
.XX	.XXX	ANGLES	DRAWN	Robert Hibbard	8.18.04
± .02	± .005	± .5°	CHECKED		
1. BREAK ALL SHARP EDGES 1/64 MAX.			APPROVED		
2. DO NOT SCALE DRAWING.			USED ON	1650-ME-381151	
3. DIMENSIONS BASED UPON ASME Y14.5M-1994					
4. MAX ALL MACH SURFACES 125			MATERIAL	STAINLESS STEEL, TYPE 304	

FERMI NATIONAL ACCELERATOR LABORATORY

UNITED STATES DEPARTMENT OF ENERGY

BEAMS CRYOGENIC SYSTEMS
ARGON SUPPORT TAB
FLARE CONDENSER ASSEMBLY

SCALE	FILMED	DRAWING NUMBER	REV
4:1		1650-MA-381157	

CREATED WITH I-DEAS 8m2

Created: 16:57:12 on 23-10-07 (D-M-Y) By: hibbard State: 1-INITIAL

REV	DESCRIPTION	DRAWN / DATE
		APPROVED / DATE

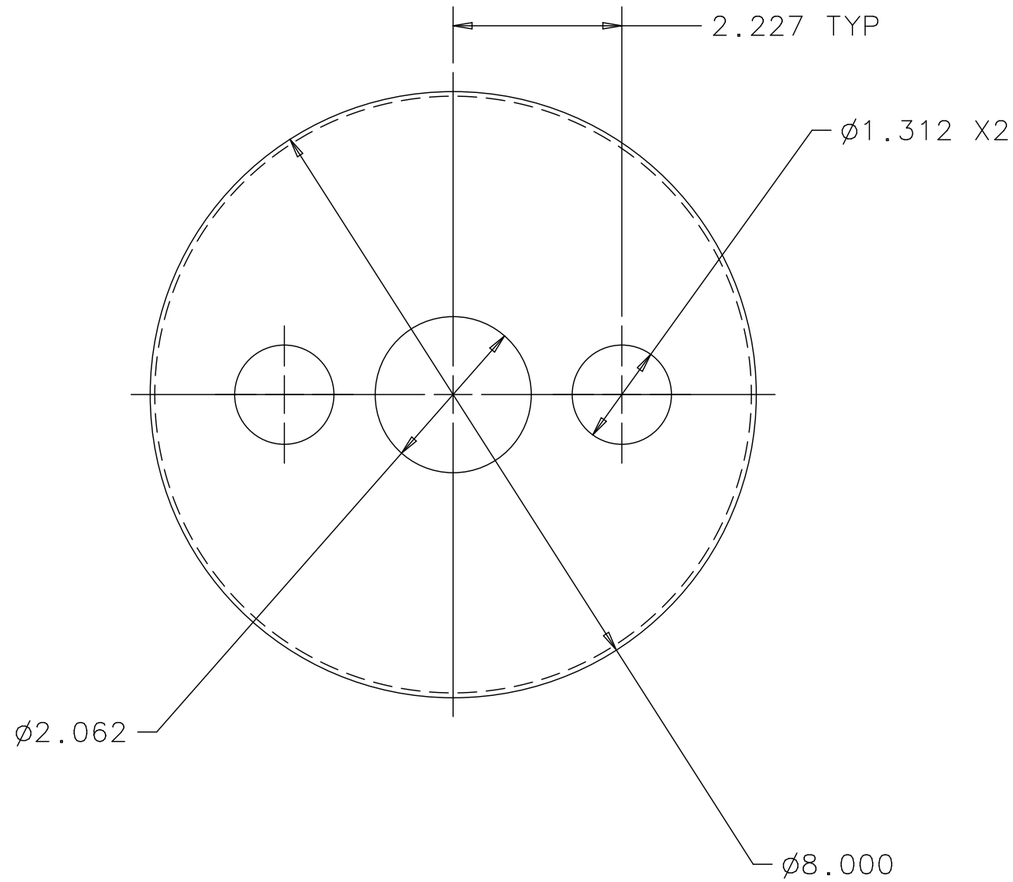

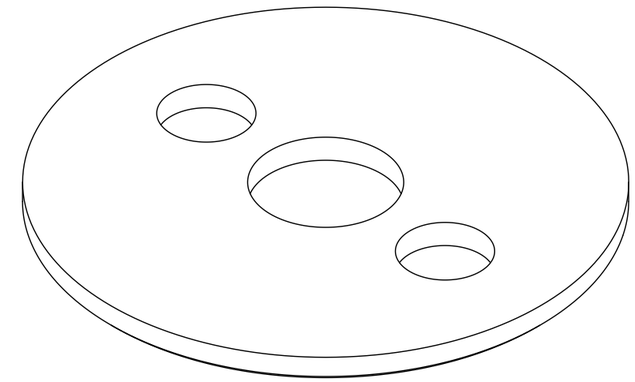

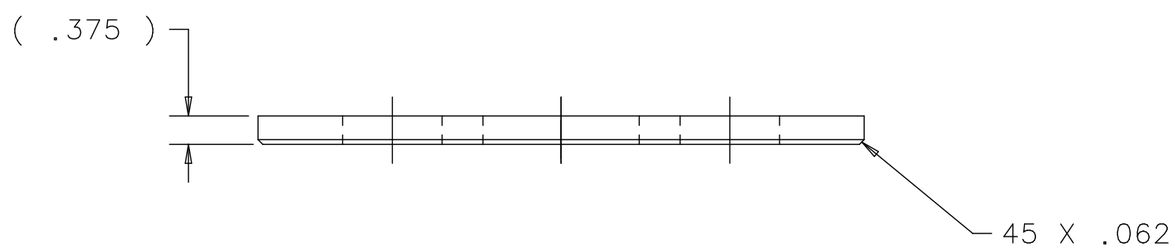

UNLESS OTHERWISE SPECIFIED			ORIGINATOR	BEN HANSEN	7.20.04
.XX	.XXX	ANGLES	DRAWN	Robert Hibbard	8.23.04
± .02	± .005	± .5°	CHECKED		
1. BREAK ALL SHARP EDGES 1/64 MAX.			APPROVED		
2. DO NOT SCALE DRAWING.			USED ON	1650-ME-381151	
3. DIMENSIONS BASED UPON ASME Y14.5M-1994					
4. MAX ALL MACH SURFACES 125			MATERIAL	3/8 PLATE, SST	

FERMI NATIONAL ACCELERATOR LABORATORY
UNITED STATES DEPARTMENT OF ENERGY

BEAMS CRYOGENIC SYSTEMS CAP, OUTER SHELL, UPPER FLARE CONDENSER ASSEMBLY

SCALE	FILMED	DRAWING NUMBER	REV
1/2		1650-MB-381158	

CREATED WITH I-DEAS 8m2

Created: 16:50:33 on 23-10-07 (D-M-Y) By: hibbard State: 1-INITIAL

REV	DESCRIPTION	DRAWN / DATE
		APPROVED / DATE

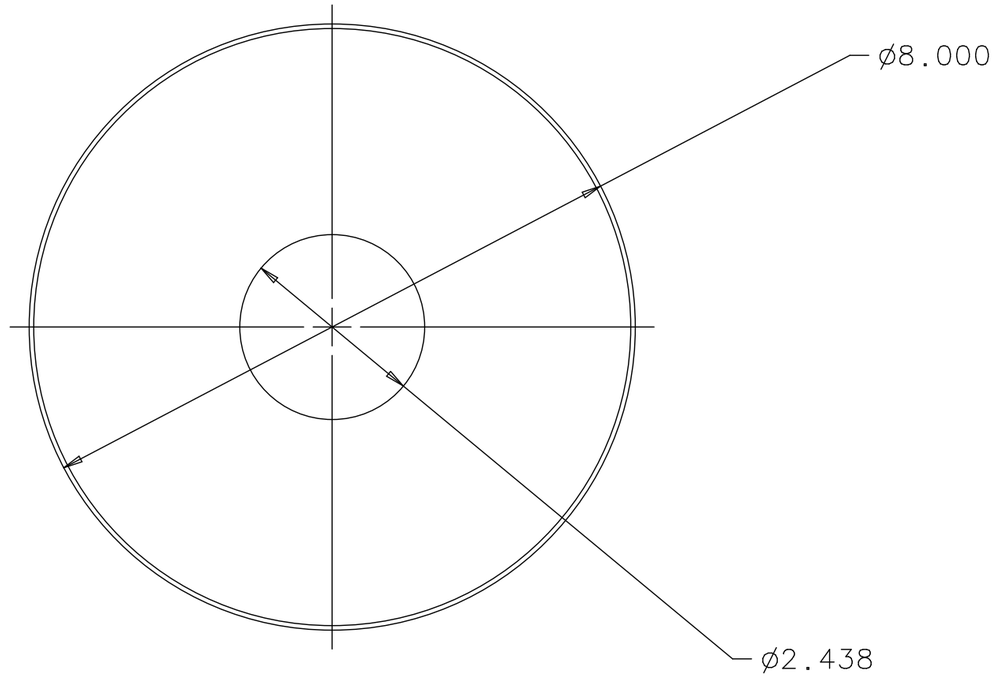

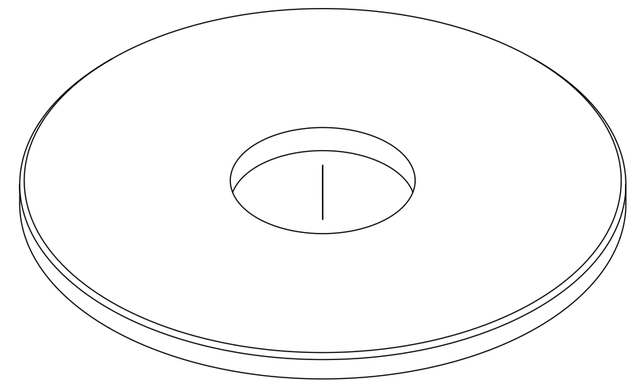

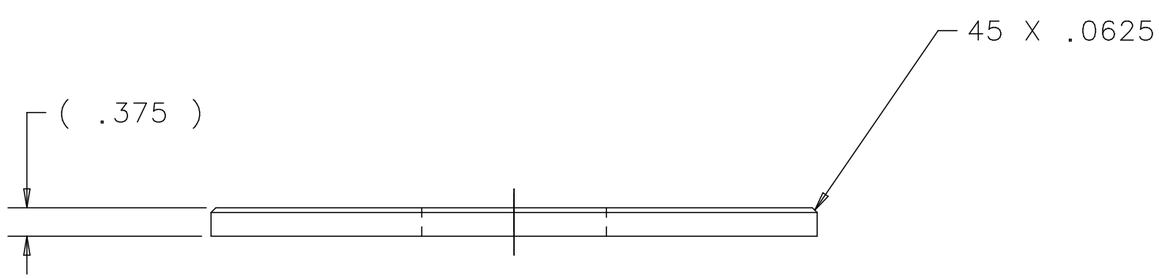

UNLESS OTHERWISE SPECIFIED			ORIGINATOR	BEN HANSEN	7.20.04
.XX	.XXX	ANGLES	DRAWN	Robert Hibbard	8.23.04
± .02	± .005	± .5°	CHECKED		
1. BREAK ALL SHARP EDGES 1/64 MAX.			APPROVED		
2. DO NOT SCALE DRAWING.			USED ON	1650-ME-381151	
3. DIMENSIONS BASED UPON ASME Y14.5M-1994					
4. MAX ALL MACH SURFACES 125			MATERIAL	3/8 PLATE, SST	

FERMI NATIONAL ACCELERATOR LABORATORY
UNITED STATES DEPARTMENT OF ENERGY

BEAMS CRYOGENIC SYSTEMS CAP, OUTER SHELL, BOTTOM FLARE CONDENSER ASSEMBLY

SCALE	FILMED	DRAWING NUMBER	REV
1/2		1650-MB-381159	

CREATED WITH I-DEAS 8m2

Created: 16:52:56 on 23-10-07 (D-M-Y) By: hibbard State: 1-INITIAL

REV	DESCRIPTION	DRAWN / DATE
		APPROVED / DATE

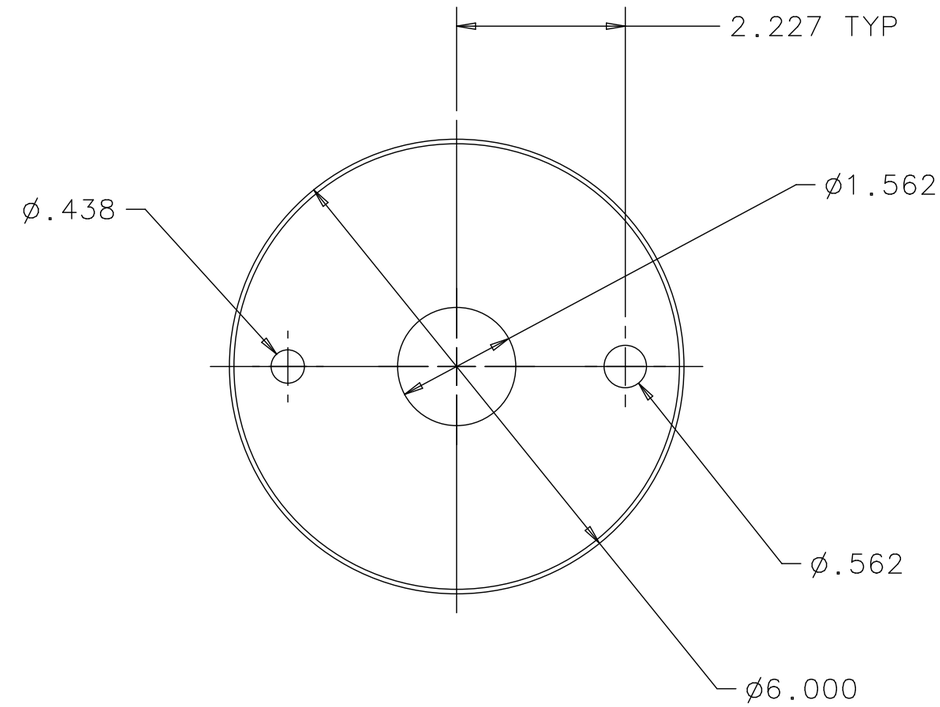

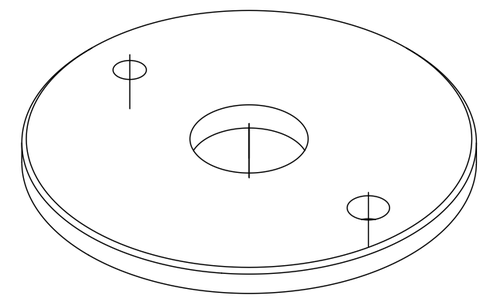

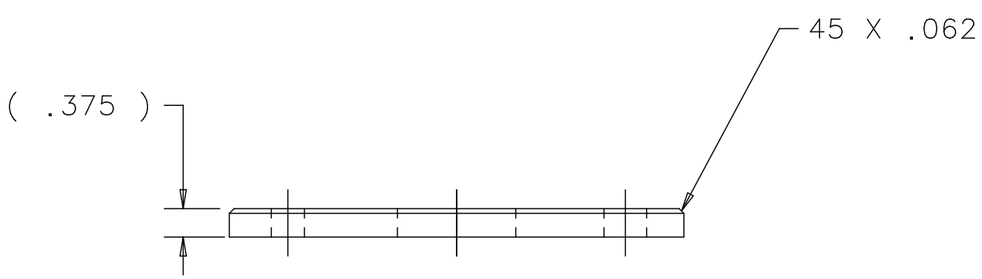

UNLESS OTHERWISE SPECIFIED			ORIGINATOR	BEN HANSEN	7.20.04
.XX	.XXX	ANGLES	DRAWN	Robert Hibbard	8.23.04
± .02	± .005	± .5°	CHECKED		
1. BREAK ALL SHARP EDGES 1/64 MAX.			APPROVED		
2. DO NOT SCALE DRAWING.			USED ON	1650-ME-381151	
3. DIMENSIONS BASED UPON ASME Y14.5M-1994					
4. MAX ALL MACH SURFACES 125			MATERIAL	3/8 PLATE, SST	

FERMI NATIONAL ACCELERATOR LABORATORY
UNITED STATES DEPARTMENT OF ENERGY

BEAMS CRYOGENIC SYSTEMS CAP, INNER SHELL, TOP FLARE CONDENSER ASSEMBLY

SCALE	FILMED	DRAWING NUMBER	REV
1/2		1650-MB-381160	

CREATED WITH I-DEAS 8m2

Created: 16:51:03 on 23-10-07 (D-M-Y) By: hibbard State: 1-INITIAL

REV	DESCRIPTION	DRAWN / DATE
		APPROVED / DATE

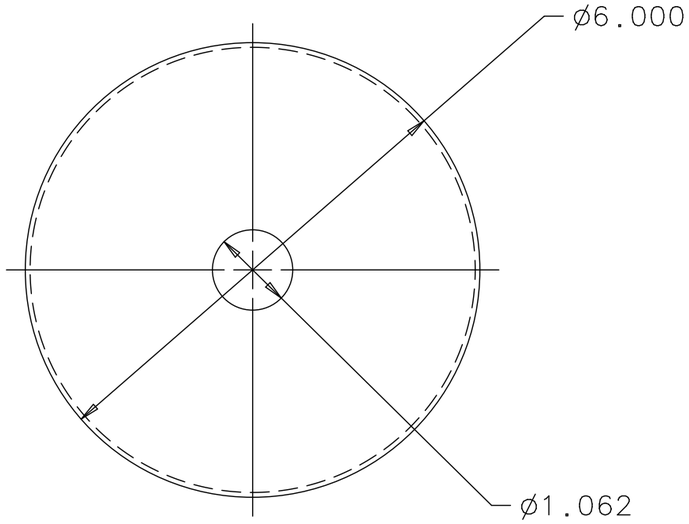

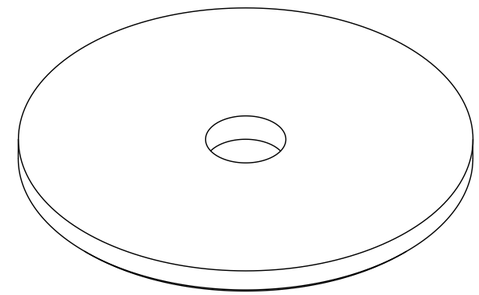

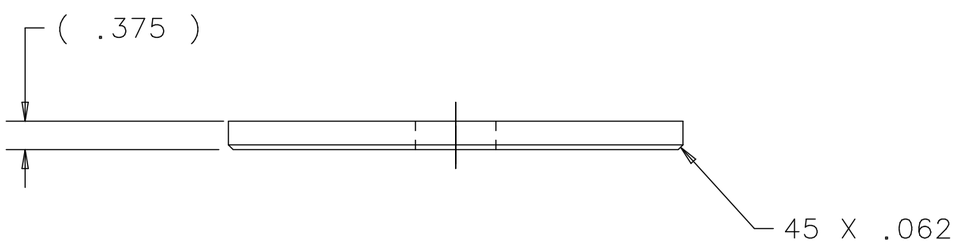

UNLESS OTHERWISE SPECIFIED			ORIGINATOR	BEN HANSEN	7.20.04
.XX	.XXX	ANGLES	DRAWN	Robert Hibbard	8.23.04
± .02	± .005	± .5°	CHECKED		
1. BREAK ALL SHARP EDGES 1/64 MAX.			APPROVED		
2. DO NOT SCALE DRAWING.			USED ON	1650-ME-381151	
3. DIMENSIONS BASED UPON ASME Y14.5M-1994					
4. MAX ALL MACH SURFACES 125			MATERIAL	3/8 PLATE, SST	

FERMI NATIONAL ACCELERATOR LABORATORY
UNITED STATES DEPARTMENT OF ENERGY

BEAMS CRYOGENIC SYSTEMS CAP, INNER SHELL, BOTTOM FLARE CONDENSER ASSEMBLY

SCALE	FILMED	DRAWING NUMBER	REV
1/2		1650-MB-381161	

CREATED WITH I-DEAS 8m2

Created: 16:52:37 on 23-10-07 (D-M-Y) By: hibbard State: 1-INITIAL

REV	DESCRIPTION	DRAWN / DATE
		APPROVED / DATE

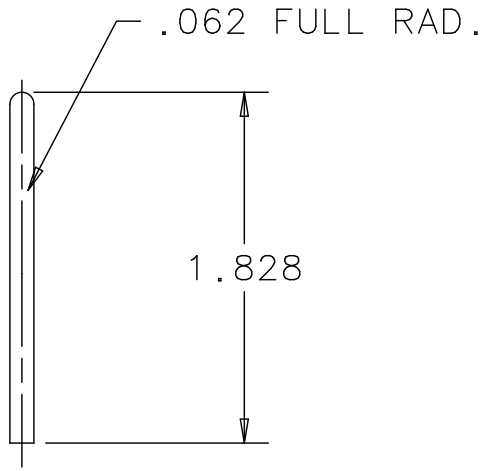

UNLESS OTHERWISE SPECIFIED			ORIGINATOR	BEN HANSEN	7.20.04
.XX	.XXX	ANGLES	DRAWN	Robert Hibbard	8.23.04
± .02	± .005	± .5°	CHECKED		
1. BREAK ALL SHARP EDGES 1/64 MAX.			APPROVED		
2. DO NOT SCALE DRAWING.			USED ON	1650-ME-381151	
3. DIMENSIONS BASED UPON ASME Y14.5M-1994					
4. MAX ALL MACH SURFACES 125			MATERIAL	ø1/8 COPPER	

FERMI NATIONAL ACCELERATOR LABORATORY

UNITED STATES DEPARTMENT OF ENERGY

BEAMS CRYOGENIC SYSTEMS STAND OFF, COPPER SHELL FLARE CONDENSER ASSEMBLY

SCALE	FILMED	DRAWING NUMBER	REV
FULL		1650-MA-381162	

CREATED WITH I-DEAS 8m2

Created: 16:56:02 on 23-10-07 (D-M-Y) By: hibbard State: 1-INITIAL

REV	DESCRIPTION	DRAWN / DATE
		APPROVED / DATE

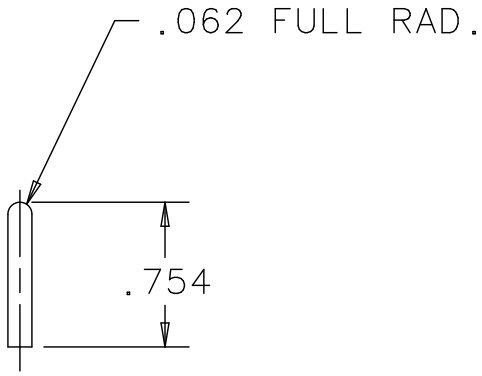

UNLESS OTHERWISE SPECIFIED			ORIGINATOR	BEN HANSEN	7.20.04
.XX	.XXX	ANGLES	DRAWN	Robert Hibbard	8.23.04
± .02	± .005	± .5°	CHECKED		
1. BREAK ALL SHARP EDGES 1/64 MAX.			APPROVED		
2. DO NOT SCALE DRAWING.			USED ON	1650-ME-381151	
3. DIMENSIONS BASED UPON ASME Y14.5M-1994					
4. MAX ALL MACH SURFACES 125			MATERIAL	ø1/8", SST	

FERMI NATIONAL ACCELERATOR LABORATORY

UNITED STATES DEPARTMENT OF ENERGY

BEAMS CRYOGENIC SYSTEMS STAND OFF, ARGON FLARE CONDENSER ASSEMBLY

SCALE	FILMED	DRAWING NUMBER	REV
FULL		1650-MA-381163	

CREATED WITH I-DEAS 8m2

Created: 16:56:27 on 23-10-07 (D-M-Y) By: hibbard State: 1-INITIAL

REV	DESCRIPTION	DRAWN / DATE
		APPROVED / DATE

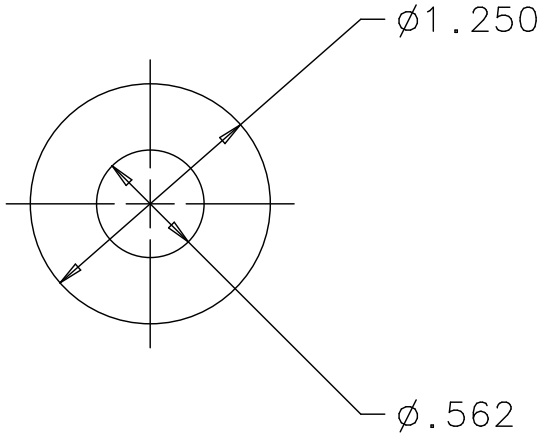

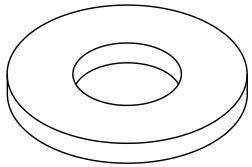

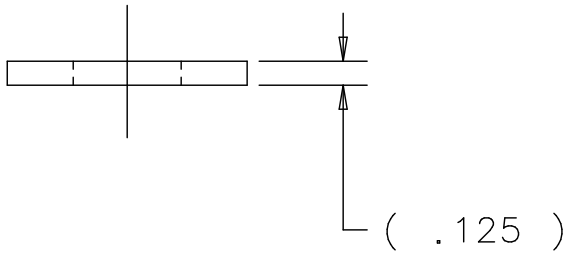

UNLESS OTHERWISE SPECIFIED			ORIGINATOR	BEN HANSEN	7.20.04
.XX	.XXX	ANGLES	DRAWN	Robert Hibbard	8.24.04
± .02	± .005	± .5°	CHECKED		
1. BREAK ALL SHARP EDGES 1/64 MAX.			APPROVED		
2. DO NOT SCALE DRAWING.			USED ON	1650-ME-381151	
3. DIMENSIONS BASED UPON ASME Y14.5M-1994					
4. MAX ALL MACH SURFACES 125			MATERIAL	1/8" THICK, SST	

FERMI NATIONAL ACCELERATOR LABORATORY

UNITED STATES DEPARTMENT OF ENERGY

BEAMS CRYOGENIC SYSTEMS
N2 BELLOW CAP
FLARE CONDENSER ASSEMBLY

SCALE	FILMED	DRAWING NUMBER	REV
FULL		1650-MA-381164	

CREATED WITH I-DEAS 8m2

Created: 16:54:49 on 23-10-07 (D-M-Y) By: hibbard State: 1-INITIAL

REV	DESCRIPTION	DRAWN / DATE
		APPROVED / DATE

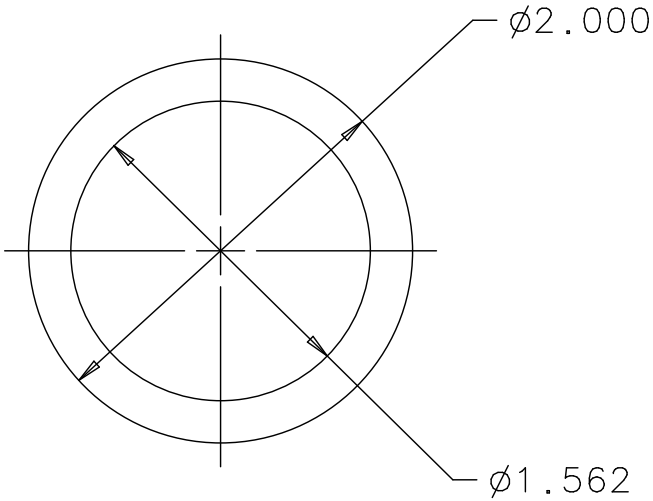

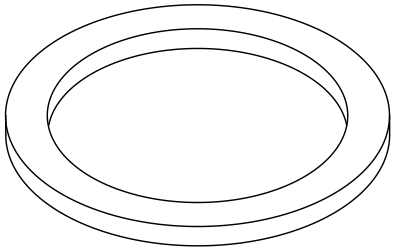

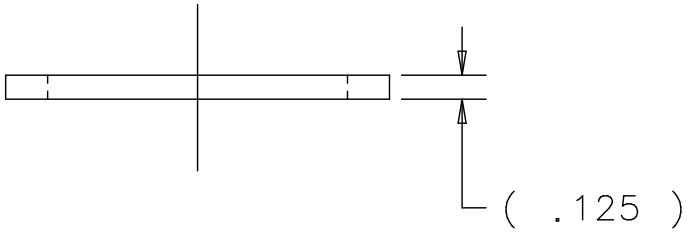

UNLESS OTHERWISE SPECIFIED			ORIGINATOR	BEN HANSEN	7.20.04
.XX	.XXX	ANGLES	DRAWN	Robert Hibbard	8.24.04
± .02	± .005	± .5°	CHECKED		
1. BREAK ALL SHARP EDGES 1/64 MAX.			APPROVED		
2. DO NOT SCALE DRAWING.			USED ON	1650-ME-381151	
3. DIMENSIONS BASED UPON ASME Y14.5M-1994			MATERIAL	1/8" THICK, SST	
4. MAX ALL MACH SURFACES 125					

FERMI NATIONAL ACCELERATOR LABORATORY
UNITED STATES DEPARTMENT OF ENERGY

BEAMS CRYOGENIC SYSTEMS
CAP, TOP
FLARE CONDENSER ASSEMBLY

SCALE	FILMED	DRAWING NUMBER	REV
FULL		1650-MA-381165	

CREATED WITH I-DEAS 8m2

Created: 16:49:36 on 23-10-07 (D-M-Y) By: hibbard State: 1-INITIAL

REV	DESCRIPTION	DRAWN / DATE
		APPROVED / DATE

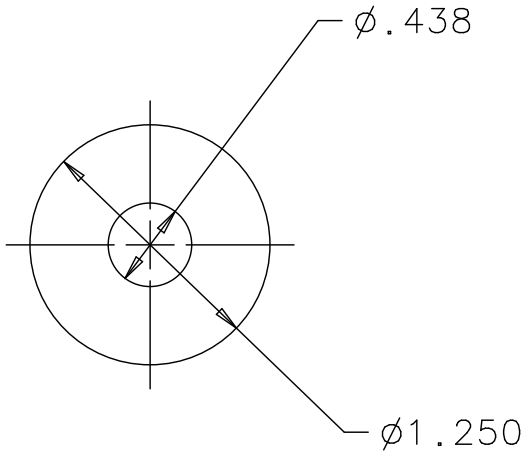

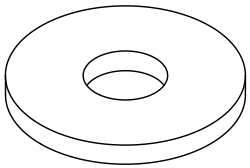

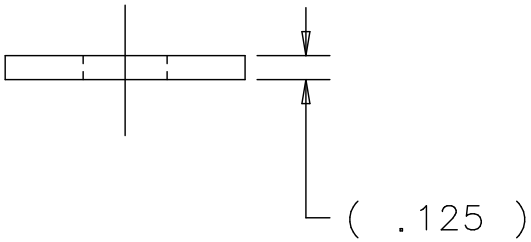

UNLESS OTHERWISE SPECIFIED			ORIGINATOR	BEN HANSEN	7.20.04
.XX	.XXX	ANGLES	DRAWN	Robert Hibbard	8.24.04
± .02	± .005	± .5°	CHECKED		
1. BREAK ALL SHARP EDGES 1/64 MAX.			APPROVED		
2. DO NOT SCALE DRAWING.			USED ON	1650-ME-381151	
3. DIMENSIONS BASED UPON ASME Y14.5M-1994					
4. MAX ALL MACH SURFACES 125			MATERIAL	1/8" THICK, SST	

FERMI NATIONAL ACCELERATOR LABORATORY

UNITED STATES DEPARTMENT OF ENERGY

BEAMS CRYOGENIC SYSTEMS CAP, LEVEL PROBE BELLOWS FLARE CONDENSER ASSEMBLY

SCALE	FILMED	DRAWING NUMBER	REV
FULL		1650-MA-381166	

CREATED WITH I-DEAS 8m2

Created: 16:49:59 on 23-10-07 (D-M-Y) By: hibbard State: 1-INITIAL

REV	DESCRIPTION	DRAWN / DATE
		APPROVED / DATE

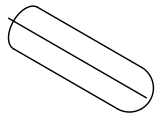

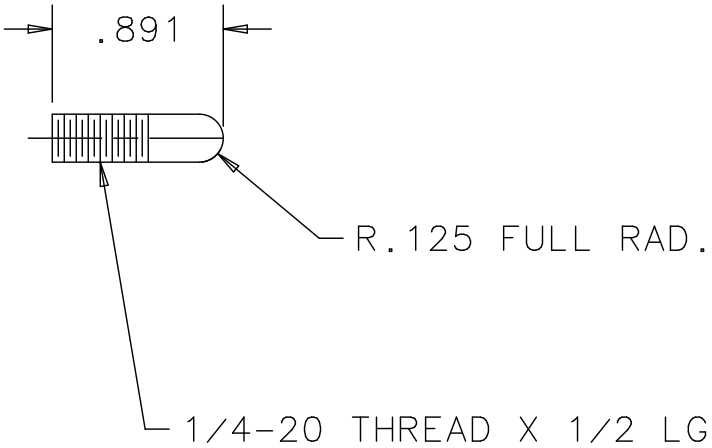

UNLESS OTHERWISE SPECIFIED			ORIGINATOR	BEN HANSEN	7.20.04
.XX	.XXX	ANGLES	DRAWN	Robert Hibbard	8.24.04
± .02	± .005	± .5°	CHECKED		
1. BREAK ALL SHARP EDGES 1/64 MAX.			APPROVED		
2. DO NOT SCALE DRAWING.			USED ON	1650-ME-381151	
3. DIMENSIONS BASED UPON ASME Y14.5M-1994					
4. MAX ALL MACH SURFACES 125			MATERIAL	ø1/4", G10	

FERMI NATIONAL ACCELERATOR LABORATORY

UNITED STATES DEPARTMENT OF ENERGY

BEAMS CRYOGENIC SYSTEMS STAND-OFF, G10 FLARE CONDENSER ASSEMBLY

SCALE	FILMED	DRAWING NUMBER	REV
FULL		1650-MA-381167	

CREATED WITH I-DEAS 8m2

Created: 16:52:16 on 23-10-07 (D-M-Y) By: hibbard State: 1-INITIAL

REV	DESCRIPTION	DRAWN / DATE
		APPROVED / DATE

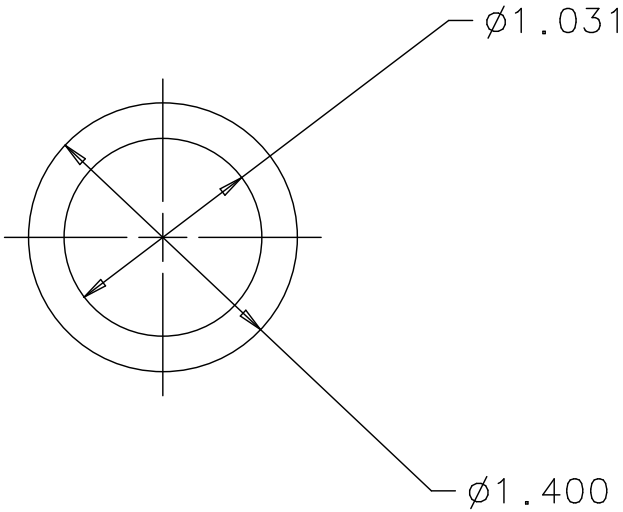

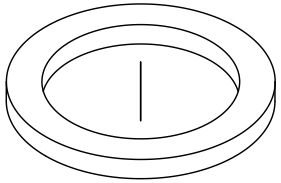

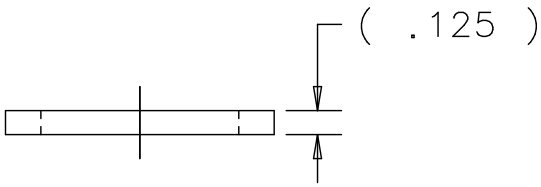

UNLESS OTHERWISE SPECIFIED			ORIGINATOR	BEN HANSEN	7.20.04
.XX	.XXX	ANGLES	DRAWN	Robert Hibbard	8.25.04
± .02	± .005	± .5°	CHECKED		
1. BREAK ALL SHARP EDGES 1/64 MAX.			APPROVED		
2. DO NOT SCALE DRAWING.			USED ON	1650-ME-381151	
3. DIMENSIONS BASED UPON ASME Y14.5M-1994					
4. MAX ALL MACH SURFACES 125			MATERIAL	1/8" THICK, SST	

FERMI NATIONAL ACCELERATOR LABORATORY

UNITED STATES DEPARTMENT OF ENERGY

BEAMS CRYOGENIC SYSTEMS
CAP, BOTTOM
FLARE CONDENSER ASSEMBLY

SCALE	FILMED	DRAWING NUMBER	REV
FULL		1650-MA-381168	

CREATED WITH I-DEAS 8m2

Created: 16:54:23 on 23-10-07 (D-M-Y) By: hibbard State: 1-INITIAL

REV	DESCRIPTION	DRAWN / DATE
		APPROVED / DATE

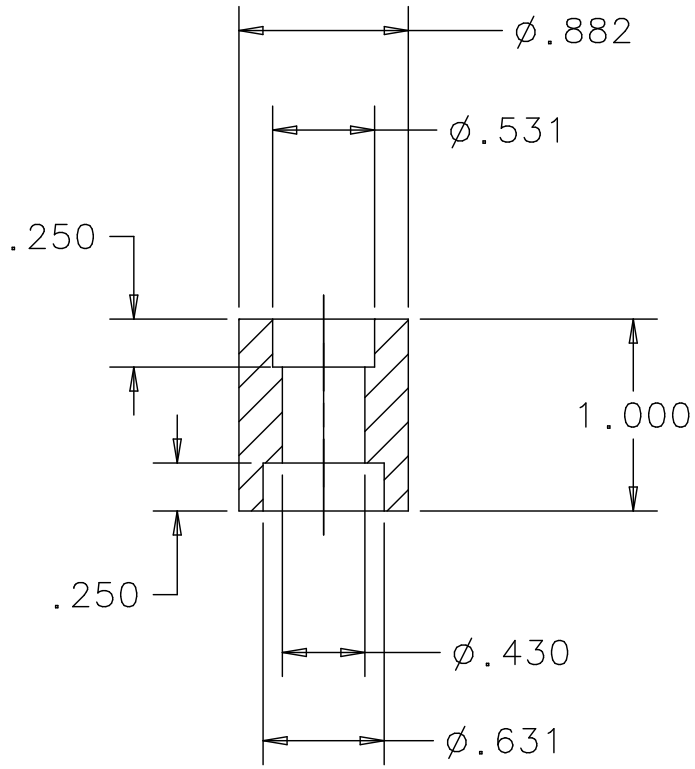

UNLESS OTHERWISE SPECIFIED			ORIGINATOR	BEN HANSEN	7.30.04
.XX	.XXX	ANGLES	DRAWN	Robert Hibbard	9.8.04
± .02	± .005	± .5°	CHECKED		
1. BREAK ALL SHARP EDGES 1/64 MAX.			APPROVED		
2. DO NOT SCALE DRAWING.			USED ON	1650-ME-381151	
3. DIMENSIONS BASED UPON ASME Y14.5M-1994					
4. MAX ALL MACH SURFACES 125			MATERIAL	STAINLESS STEEL, TYPE 304	

FERMI NATIONAL ACCELERATOR LABORATORY

UNITED STATES DEPARTMENT OF ENERGY

BEAMS CRYOGENIC SYSTEMS ADAPTER, TRANSITION FLARE CONDENSER ASSEMBLY

SCALE	FILMED	DRAWING NUMBER	REV
FULL		1650-MA-381169	

CREATED WITH I-DEAS 8m2

Created: 16:57:37 on 23-10-07 (D-M-Y) By: hibbard State: 1-INITIAL

REV	DESCRIPTION	DRAWN / DATE
		APPROVED / DATE

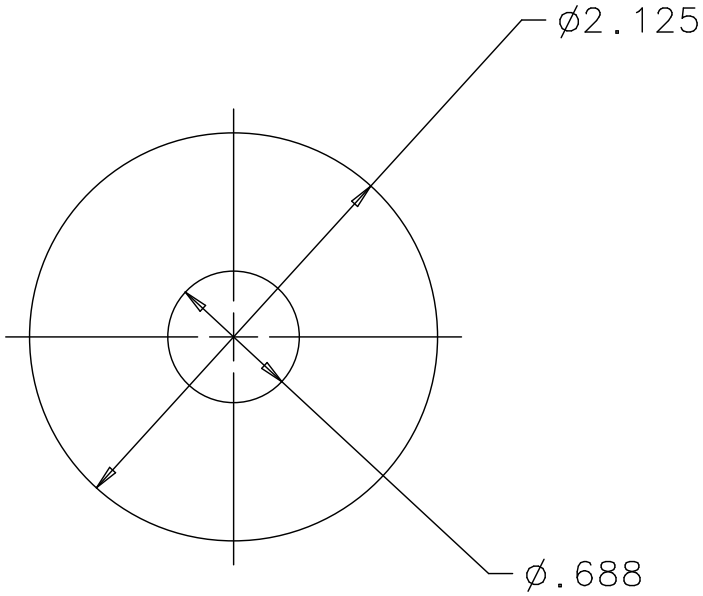

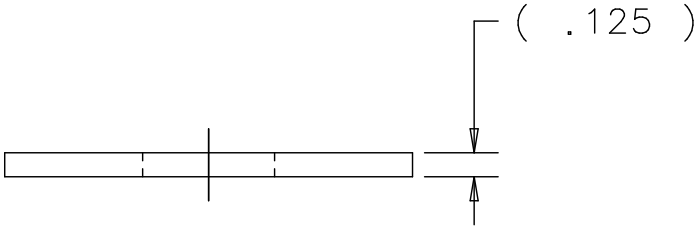

UNLESS OTHERWISE SPECIFIED			ORIGINATOR	BEN HANSEN	7.20.04
.XX	.XXX	ANGLES	DRAWN	Robert Hibbard	9.9.04
± .02	± .005	± .5°	CHECKED		
1. BREAK ALL SHARP EDGES 1/64 MAX.			APPROVED		
2. DO NOT SCALE DRAWING.			USED ON	1650-ME-381151	
3. DIMENSIONS BASED UPON ASME Y14.5M-1994					
4. MAX ALL MACH SURFACES 125			MATERIAL	1/8 PLATE, COPPER	

FERMI NATIONAL ACCELERATOR LABORATORY

UNITED STATES DEPARTMENT OF ENERGY

BEAMS CRYOGENIC SYSTEMS
CAP, COPPER SHELL
FLARE CONDENSER ASSEMBLY

SCALE	FILMED	DRAWING NUMBER	REV
FULL		1650-MA-381170	

CREATED WITH I-DEAS 8m2

Created: 16:55:38 on 23-10-07 (D-M-Y) By: hibbard State: 1-INITIAL