Bo LArTPC Preamp Fuse Panel - FET & DRV

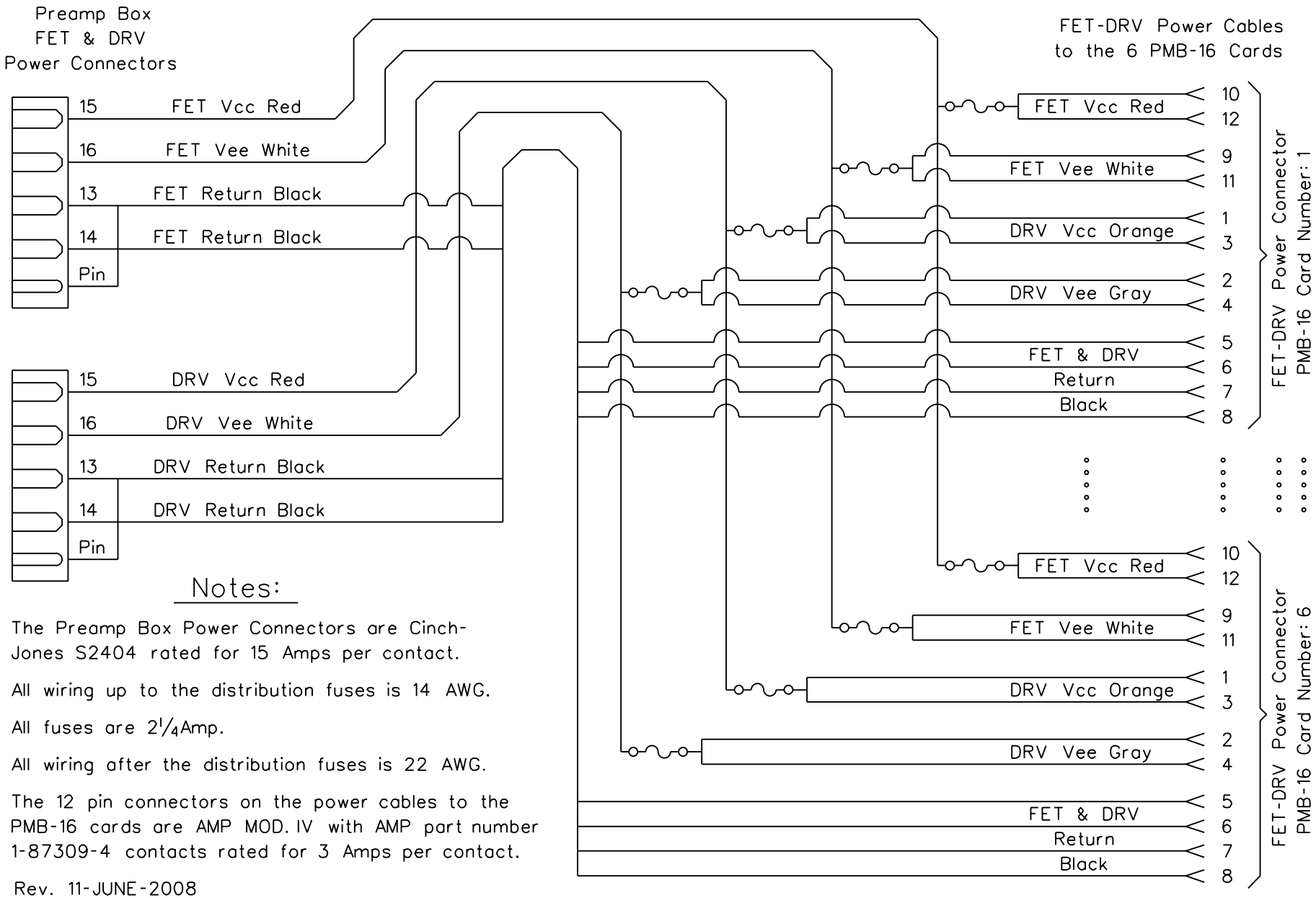

Notes:

The Preamp Box Power Connectors are Cinch-Jones S2404 rated for 15 Amps per contact.

All wiring up to the distribution fuses is 14 AWG.

All fuses are 2¼Amp.

All wiring after the distribution fuses is 22 AWG.

The 12 pin connectors on the power cables to the PMB-16 cards are AMP MOD. IV with AMP part number 1-87309-4 contacts rated for 3 Amps per contact.

Rev. 11-JUNE-2008