Bo LArTPC Preamp Fuse Panel - Filter

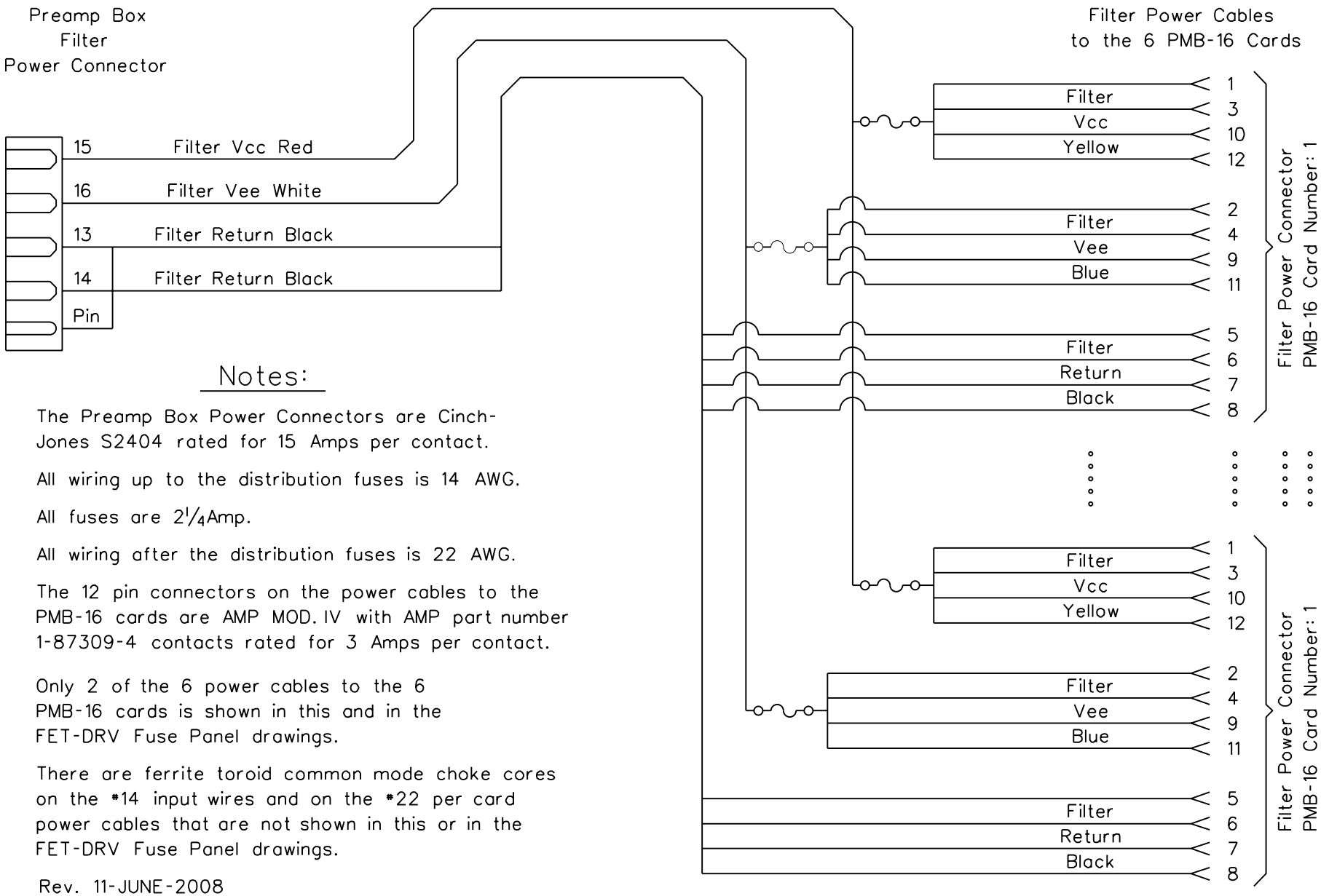

Notes:

The Preamp Box Power Connectors are Cinch-Jones S2404 rated for 15 Amps per contact.

All wiring up to the distribution fuses is 14 AWG.

All fuses are 2¼Amp.

All wiring after the distribution fuses is 22 AWG.

The 12 pin connectors on the power cables to the PMB-16 cards are AMP MOD. IV with AMP part number 1-87309-4 contacts rated for 3 Amps per contact.

Only 2 of the 6 power cables to the 6 PMB-16 cards is shown in this and in the FET-DRV Fuse Panel drawings.

There are ferrite toroid common mode choke cores on the #14 input wires and on the #22 per card power cables that are not shown in this or in the FET-DRV Fuse Panel drawings.

Rev. 11-JUNE-2008