Bo LArTPC Preamp Power Supply

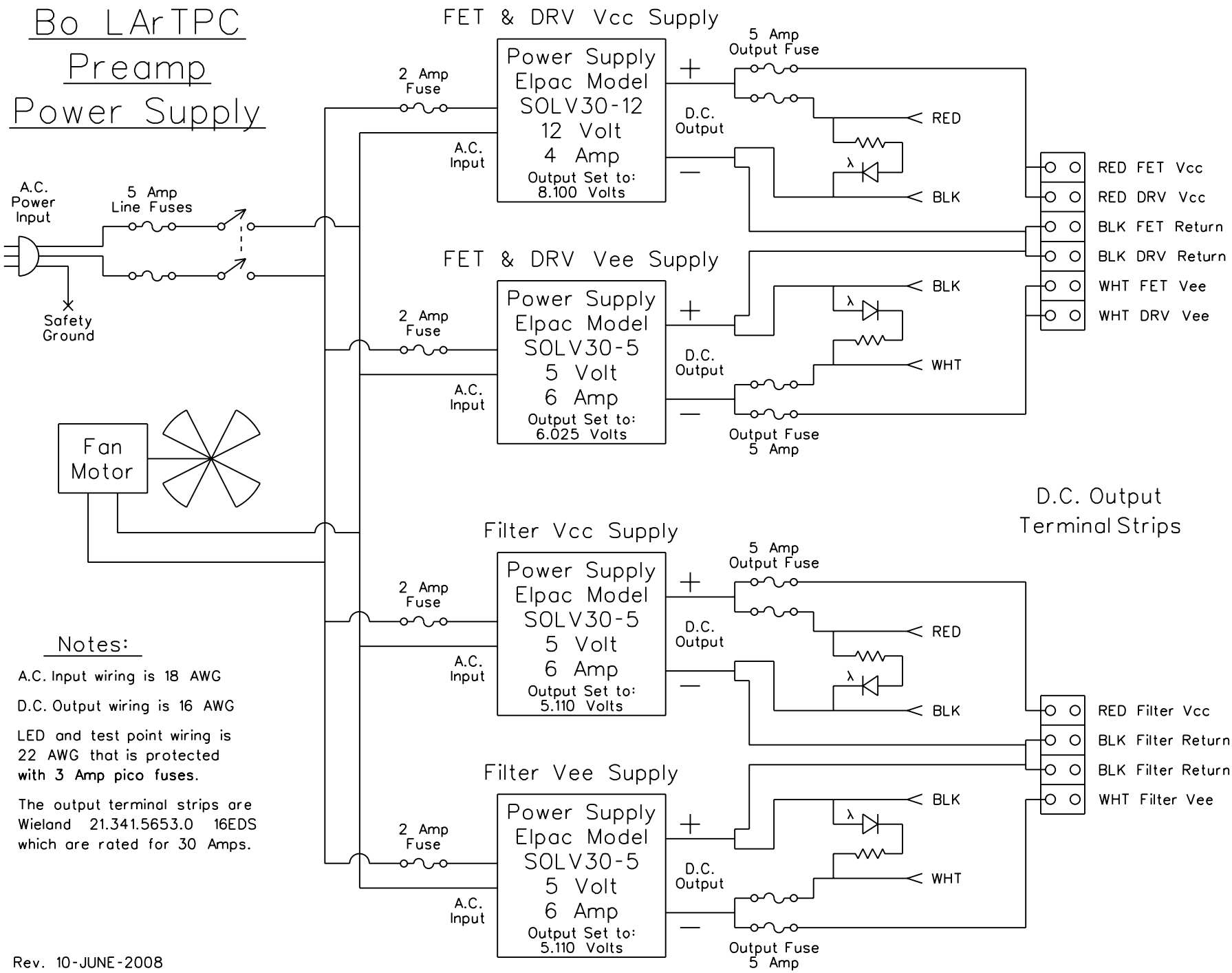

Notes:

A.C. Input wiring is 18 AWG

D.C. Output wiring is 16 AWG

LED and test point wiring is 22 AWG that is protected with 3 Amp pico fuses.

The output terminal strips are Wieland 21.341.5653.0 16EDS which are rated for 30 Amps.

Rev. 10-JUNE-2008