REV	DESCRIPTION	DRAWN	DATE
		APPROVED	DATE
A	REV. MATERIAL ON ITEM #14, WAS TYGON TUBING, 3/16 ID	PAT POLL	12/23/08
		J. KRIDER	12/23/08

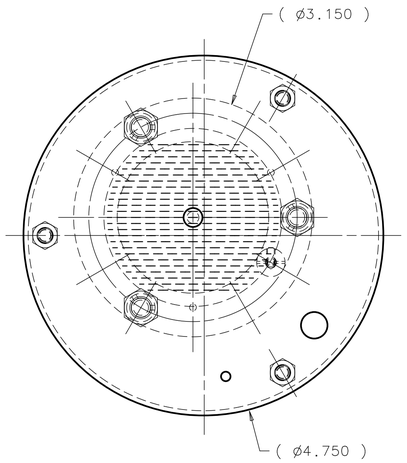

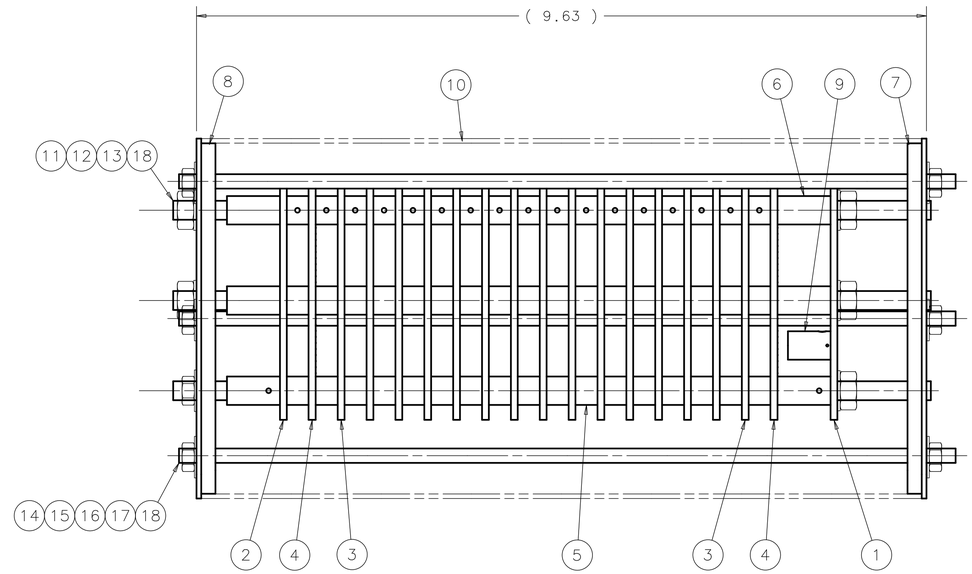

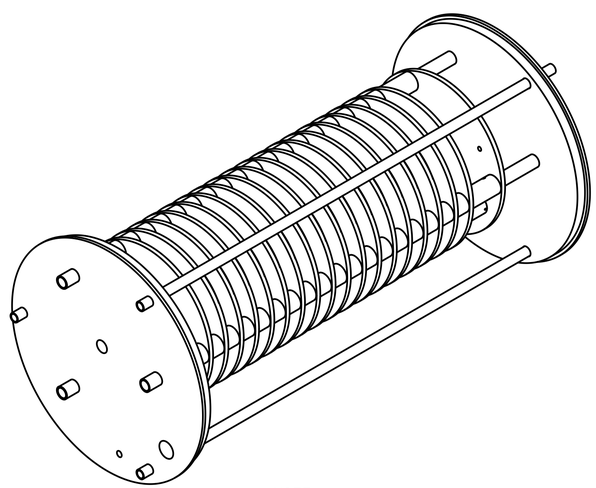

NOTE
MESH COVER NOT SHOWN FOR CLARITY

ITEM	PART NO.	DESCRIPTION OR SIZE	QTY.
18	COML.	FLAT WASHER, 1/4 SCREW SIZE, SST	9
17	COML.	HEX NUT, #10-32 UNF, 304 SST	6
16	McMASTER-CARR P/N 9713K59	BELLEVILLE DISC SPRING, ø.375 x ø.190 x .020; 110#, 302 SST	3
15	COML.	THREADED ROD, #10-32 UNF x 10.25 LG., 304 SST	3
14	McMASTER-CARR P/N 52355K14	TUBING, TEFLON FEP, 1/4" ID x 5/16" OD x 1/32 WALL, WHITE	3
13	COML.	HEX NUT, 1/4-20 UNC, 304 SST	6
12	McMASTER-CARR P/N 9716K47	CURVED DISC SPRING, ø.551 x ø.265 x .018; 21#, 301 SST	3
11	COML.	THREADED ROD, 1/4-20 UNC x 9.75" LG., PEEK	3
10	MB-444433	MESH COVER	1
9	MB-444512	QUARTZ FIBER HOLDER	1
8	MB-444429	END CAP, SOUTH	1
7	MB-444338	END CAP, NORTH	1
6	MB-444337 -1,-3,-4	CYLINDRICAL SPACER, LG.AS NOTED USED ON ROW WITH SOLDER TAB	19
5	MB-444337 -2,-5,-6	CYLINDRICAL SPACER, LG.AS NOTED	38
4	MB-444430	GRID RING, COPPER-CLAD G-10	2
3	MB-444335	ACCELERATOR RING	15
2	MB-444334	ANODE DISK	1
1	MB-444333	CATHODE DISK	1

PARTS LIST

UNLESS OTHERWISE SPECIFIED			ORIGINATOR	J.KRIDER	25-AUG-2006
.XX	.XXX	ANGLES	DRAWN	P.POLL	29-JAN-2007
± .02	± .005	± 1°	CHECKED	W.CYKO	14-SEP-2007
			APPROVED	J.KRIDER	18-SEP-2007

1. BREAK ALL SHARP EDGES --- MAX.
2. DO NOT SCALE DRAWING.
3. DIMENSIONS BASED UPON ASME Y14.5M-1994
4. MAX. ALL MACH. SURFACES ---√
5. DRAWING UNITS: U.S. INCH

USED ON: MD-444332

MATERIAL: 304-SST

FERMI NATIONAL ACCELERATOR LABORATORY
UNITED STATES DEPARTMENT OF ENERGY

FLARE-MECHANICAL DETECTORS PURITY MONITOR ASSEMBLY

SCALE	DRAWING NUMBER	SHEET	REV
1:1	3942.330-MD-444332	1 OF 1	A

CREATED WITH : Ideas12NXSeries | GROUP: PPD/MECHANICAL DEPARTMENT

NOTICE: IMAGE OBTAINED FROM FERMILAB WEB SITE

This information is provided for REFERENCE use only. Not for MANUFACTURE, or DESIGN INFORMATION. All information contained in this document represents work sponsored by an agency of the U.S. Government. Neither the U.S. Government nor any agency thereof, nor Universities Research Association, Inc., nor any of their employees or officers, makes any warranty, express or implied, or assumes any legal liability or responsibility for the accuracy, completeness, or usefulness of any information, apparatus, product or process disclosed, or represents that its use would not infringe privately owned rights.