REV	DESCRIPTION	DRAWN	DATE
		APPROVED	DATE

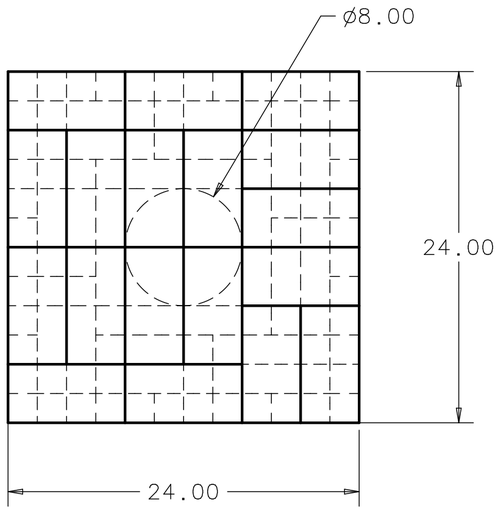

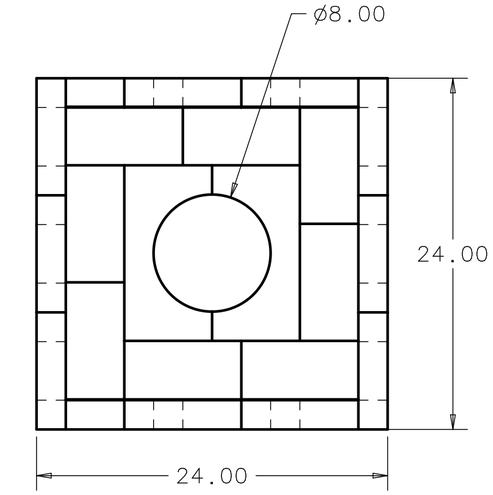

Inner layers of lead shield

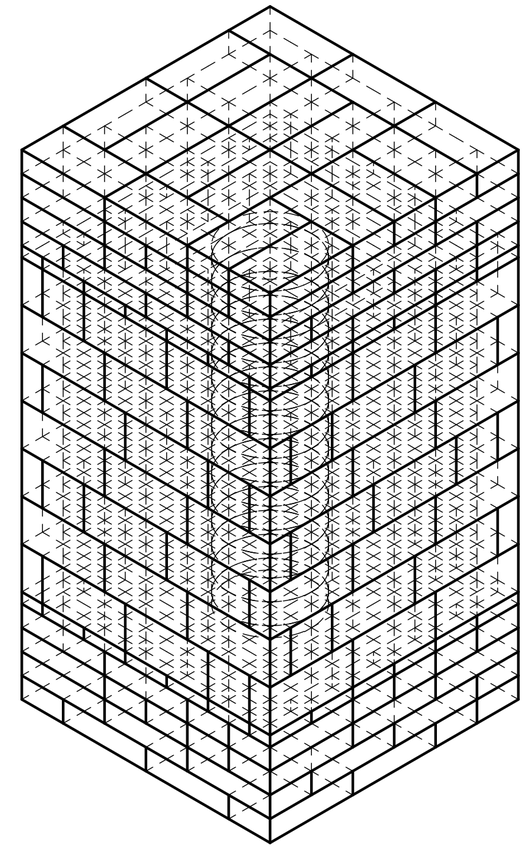

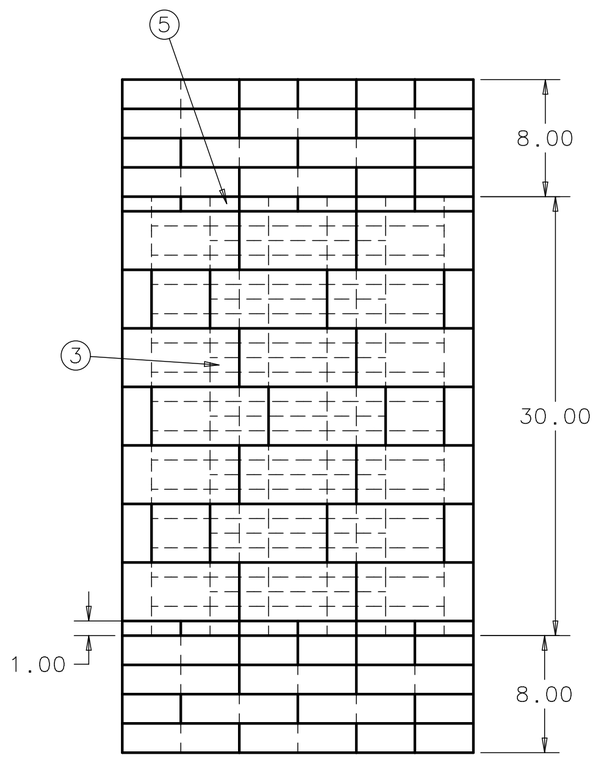

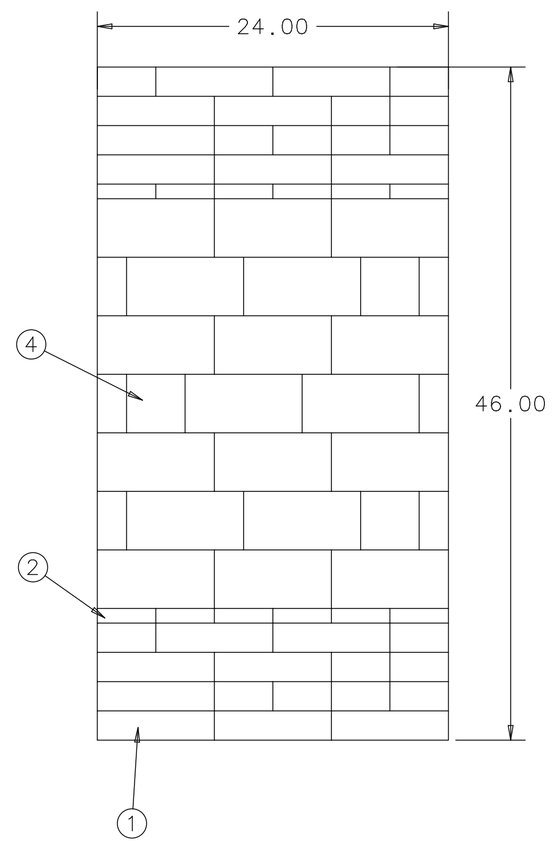

ITEM	PART NO.	DESCRIPTION OR SIZE	QTY.
5	466470-2	1" Thick "Special" Brick	4
4	466470-4	2" x 4" x 4" Lead Brick	14
3	466470-1	2" Thick "Special" Brick	28
2	466470-5	1" x 2" x 4" Lead Brick	44
1	466470-3	2" x 4" x 8" Lead Brick	334

PARTS LIST

UNLESS OTHERWISE SPECIFIED			ORIGINATOR	A.SONNENSCHEIN	
.XX			DRAWN	C.MARTIN	15-JUN-2009
± 1/16	±	±	CHECKED		
			APPROVED		

1. BREAK ALL SHARP EDGES MAX.
2. DO NOT SCALE DRAWING.
3. DIMENSIONS BASED UPON ASME Y14.5M-1994
4. MAX. ALL MACH. SURFACES ✓
5. DRAWING UNITS: U.S. INCH

USED ON

MATERIAL
SEE PARTS LIST ABOVE

FERMI NATIONAL ACCELERATOR LABORATORY
UNITED STATES DEPARTMENT OF ENERGY

DUSEL
LEAD SHIELDING
COMPLETE LEAD SHIELDING

SCALE	DRAWING NUMBER	SHEET	REV
1:8	9214.000-MC-466469	1 OF 1	

CREATED WITH : Ideas12NXSeries | GROUP: PPD/MECHANICAL DEPARTMENT

INCHES 0 1 2 METRIC 0 10 20 30 40 50

Created: 13:29:17 on 17-06-09 (D-M-Y) By: cmartin1 State: 1-INITIAL