REV	DESCRIPTION	DRAWN	DATE
		APPROVED	DATE

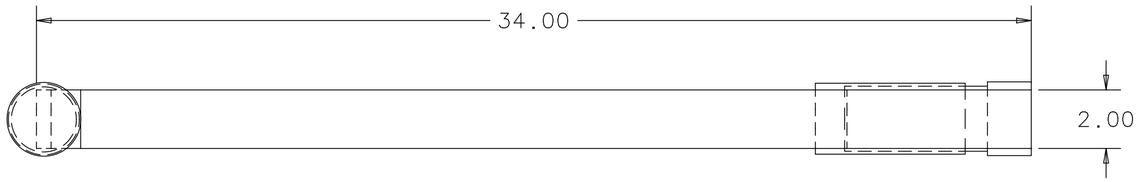

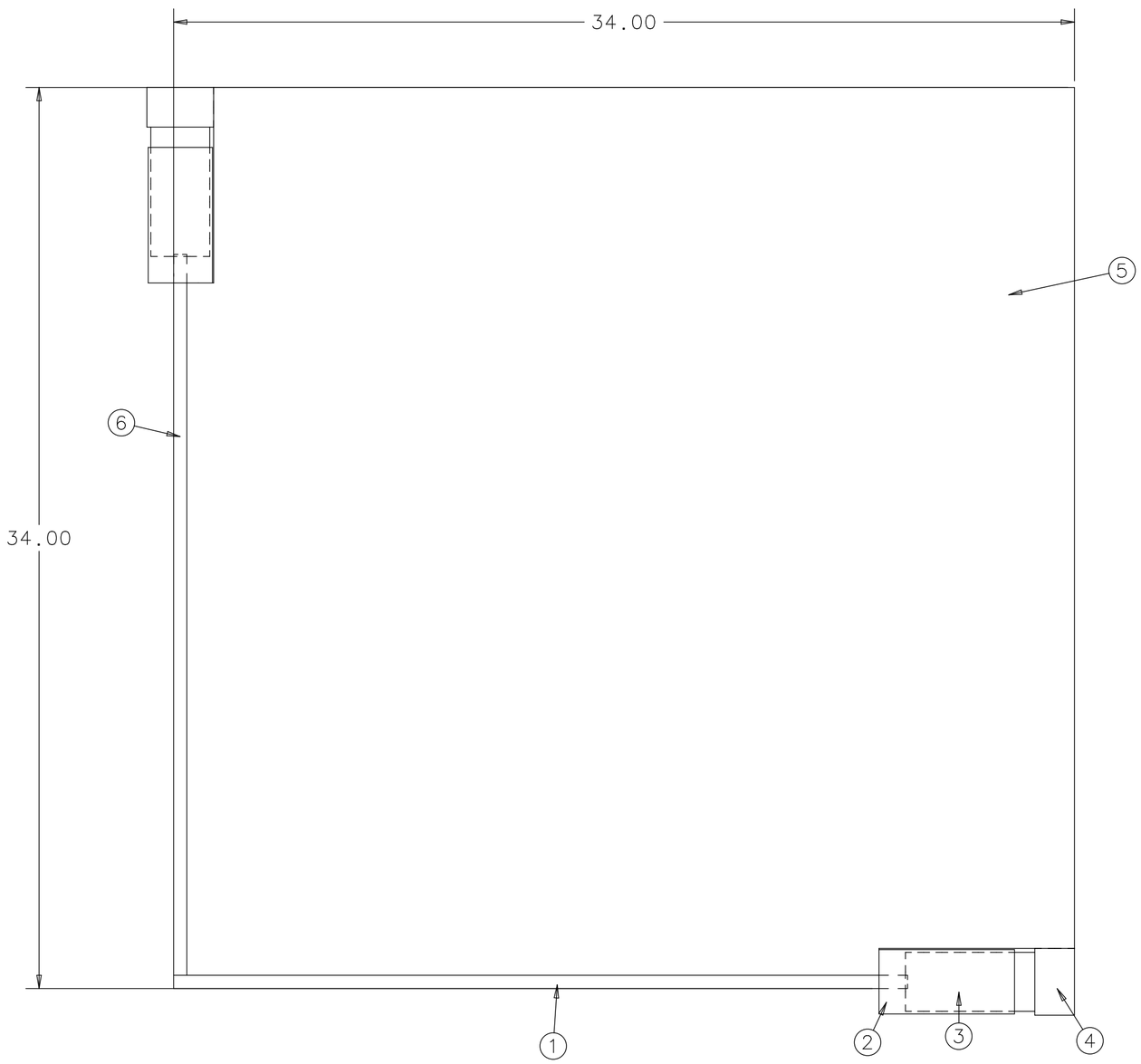

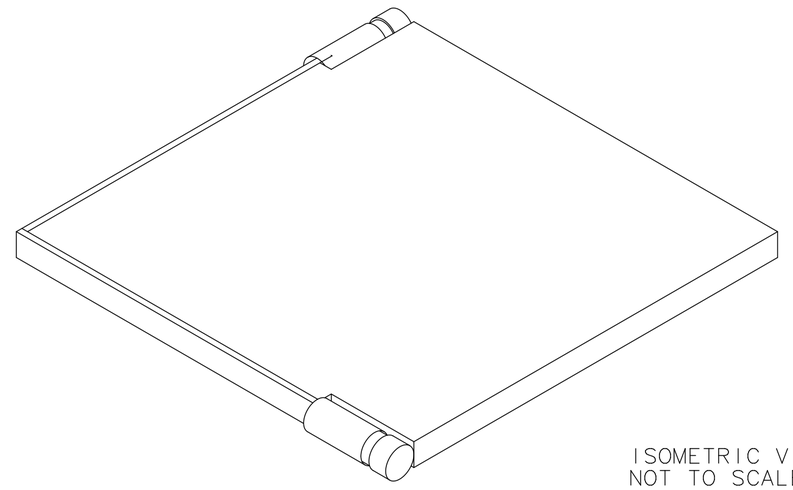

ISOMETRIC VIEW
NOT TO SCALE

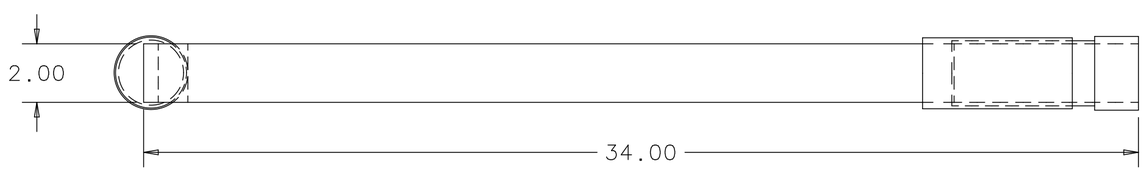

ITEM	PART NO.	DESCRIPTION OR SIZE	QTY.
6	MC-466456	TOP WLS BAR B	1
5	MC-466455	TOP SCINTILLATOR	1
4	COML	D-TYPE SOCKET ASSEMBLY HAMAMATSU E1198-23	2
3	COML	PMT HAMAMATSU R550	2
2	COML	PMT MAGNETIC SHIELD HAMAMATSU E989-05	2
1	MC-466453	TOP WLS BAR A	1

PARTS LIST

UNLESS OTHERWISE SPECIFIED
.XX
± 0.01 ± ±

1. BREAK ALL SHARP EDGES MAX.
2. DO NOT SCALE DRAWING.
3. DIMENSIONS BASED UPON ASME Y14.5M-1994
4. MAX. ALL MACH. SURFACES
5. DRAWING UNITS: U.S. INCH

ORIGINATOR	C.J.MARTOFF	
DRAWN	C.MARTIN	29-MAY-2009
CHECKED		
APPROVED		

USED ON

MATERIAL
SEE PARTS LIST

FERMI NATIONAL ACCELERATOR LABORATORY
UNITED STATES DEPARTMENT OF ENERGY

DUSEL
MUON VETO COUNTER
TOP MUON VETO SHEET

SCALE	DRAWING NUMBER	SHEET	REV
1:4	9214.000-MC-466457	1 OF 1	

CREATED WITH : Ideas12NXSeries GROUP: PPD/MECHANICAL DEPARTMENT

Created: 12:52:11 on 17-06-09 (D-M-Y) By: cmartin1 State: 1-INITIAL