REV	DESCRIPTION	DRAWN	DATE
		APPROVED	DATE

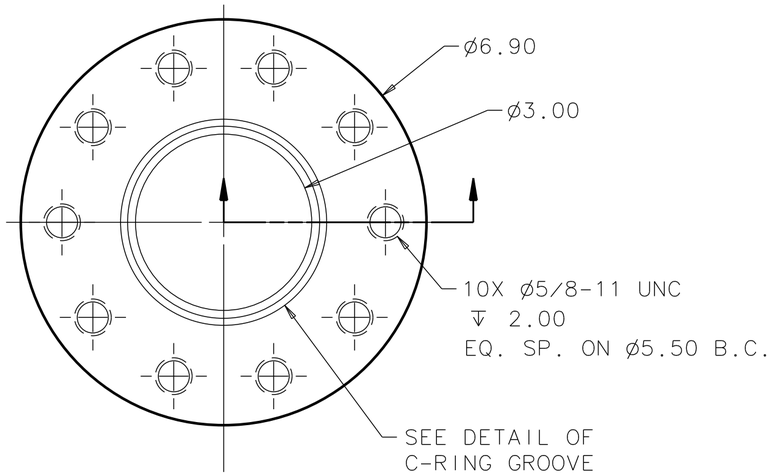

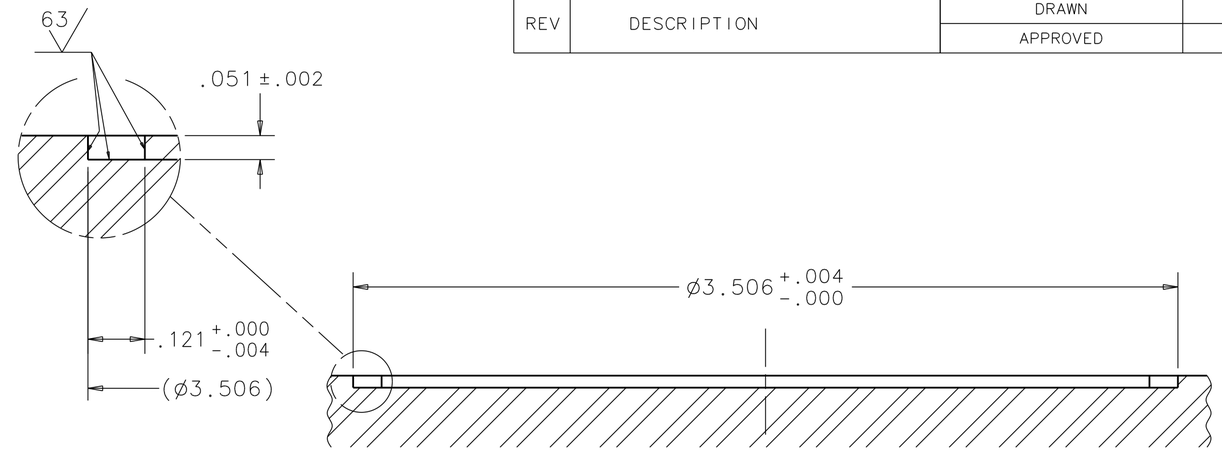

METAL C-RING GROOVE

SCALE= 2:1

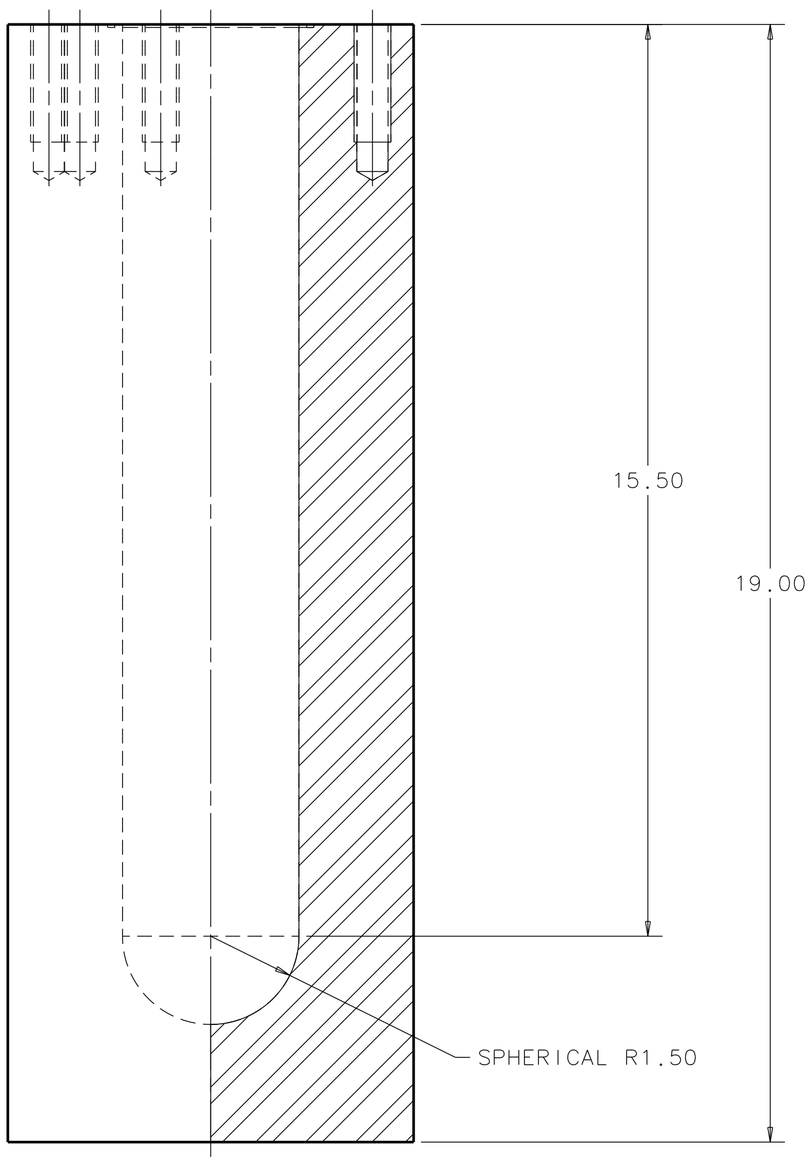

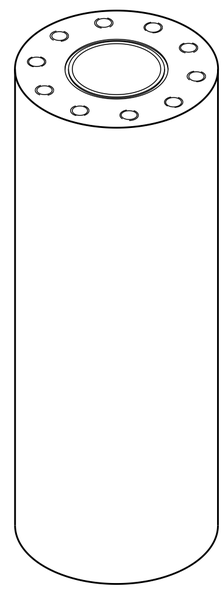

UNLESS OTHERWISE SPECIFIED			ORIGINATOR	K.KREMPETZ	06-APR-2009
.XX	.XXX	ANGLES	DRAWN	P.POLL	13-APR-2009
± .02	± .005	± 1°	CHECKED		
			APPROVED		

1. BREAK ALL SHARP EDGES .015 MAX.
2. DO NOT SCALE DRAWING.
3. DIMENSIONS BASED UPON ASME Y14.5M-1994
4. MAX. ALL MACH. SURFACES 125
5. DRAWING UNITS: U.S. INCH

USED ON: MC-466392

MATERIAL: ALLOY C10100 OFHC COPPER

FERMI NATIONAL ACCELERATOR LABORATORY
UNITED STATES DEPARTMENT OF ENERGY

DUSEL
ARGON HIGH PRESURE TEST VESSEL
VESSEL CYLINDER

SCALE	DRAWING NUMBER	SHEET	REV
1:2	9214.000-MC-466393	1 OF 1	

CREATED WITH : Ideas12NXSeries | GROUP: PPD/MECHANICAL DEPARTMENT