Materials Qualification for long drift Liquid Argon TPC

Effect of water on electron drift lifetime

Plans

Argon Source, Materials Test System, and Electronics Test System

Develop purification, check detector materials, TPC for electronics development

Schematic of Materials Test Stand

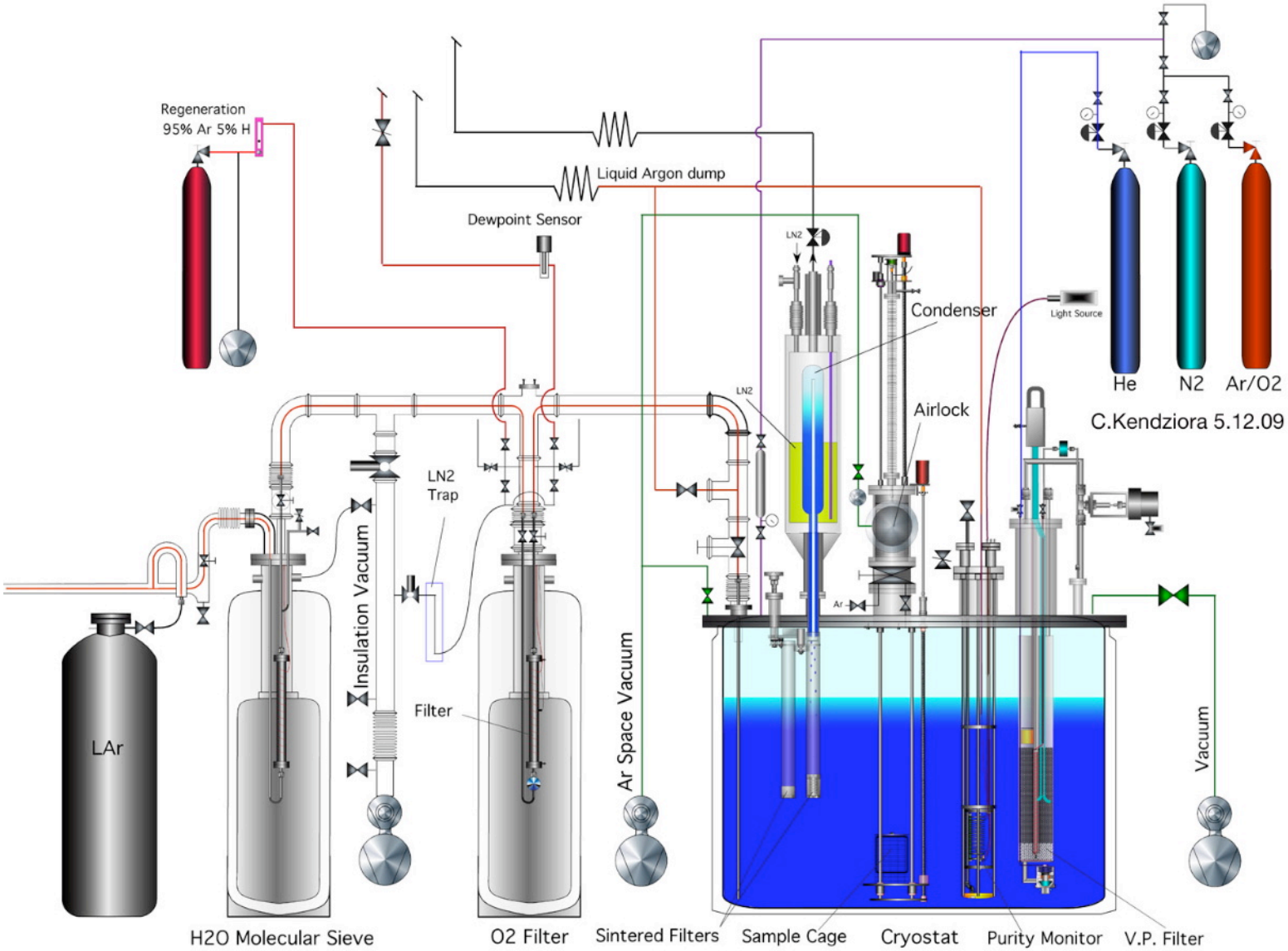

Materials Test Stand

Features of Materials Test Stand

- Can insert materials into known clean argon.
- Can insert materials after purging only or after pumping on them.
- Can position materials into liquid and into ullage with range of temperatures.
- Can insert known amounts of contaminant gases
- Nitrogen-based condenser can maintain liquid for long (weeks) studies
- Internal filter-pump can remove contamination introduced by materials

o Measure electron drift lifetime with ICARUS style purity monitor

o Measure Oxygen (0.3 ppb sensitivity) with oxygen meter

o Measure H20 in gas (0.3 ppb sensitivity) with water meter

oCryogenic data, Lifetime Data, analytic instrumentation data in single data-base

Insertion of a material sample into the airlock (argonlock) basket

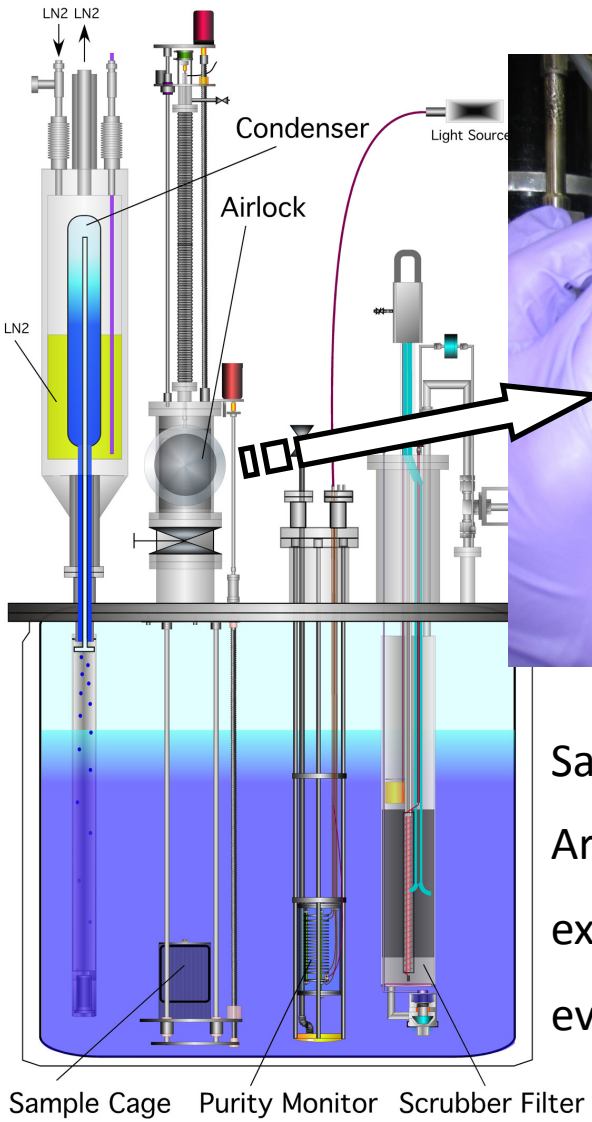

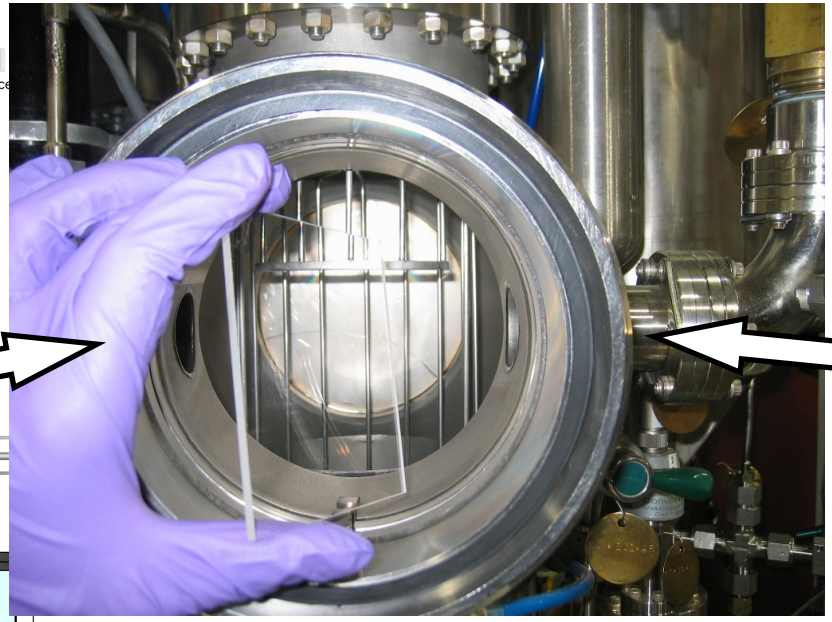

Sample volume 10 cm x 10 cm x 10 cm

Argonlock can be purged with external argon, cryostat argon, and/or evacuated

Cryogenics Control Screen

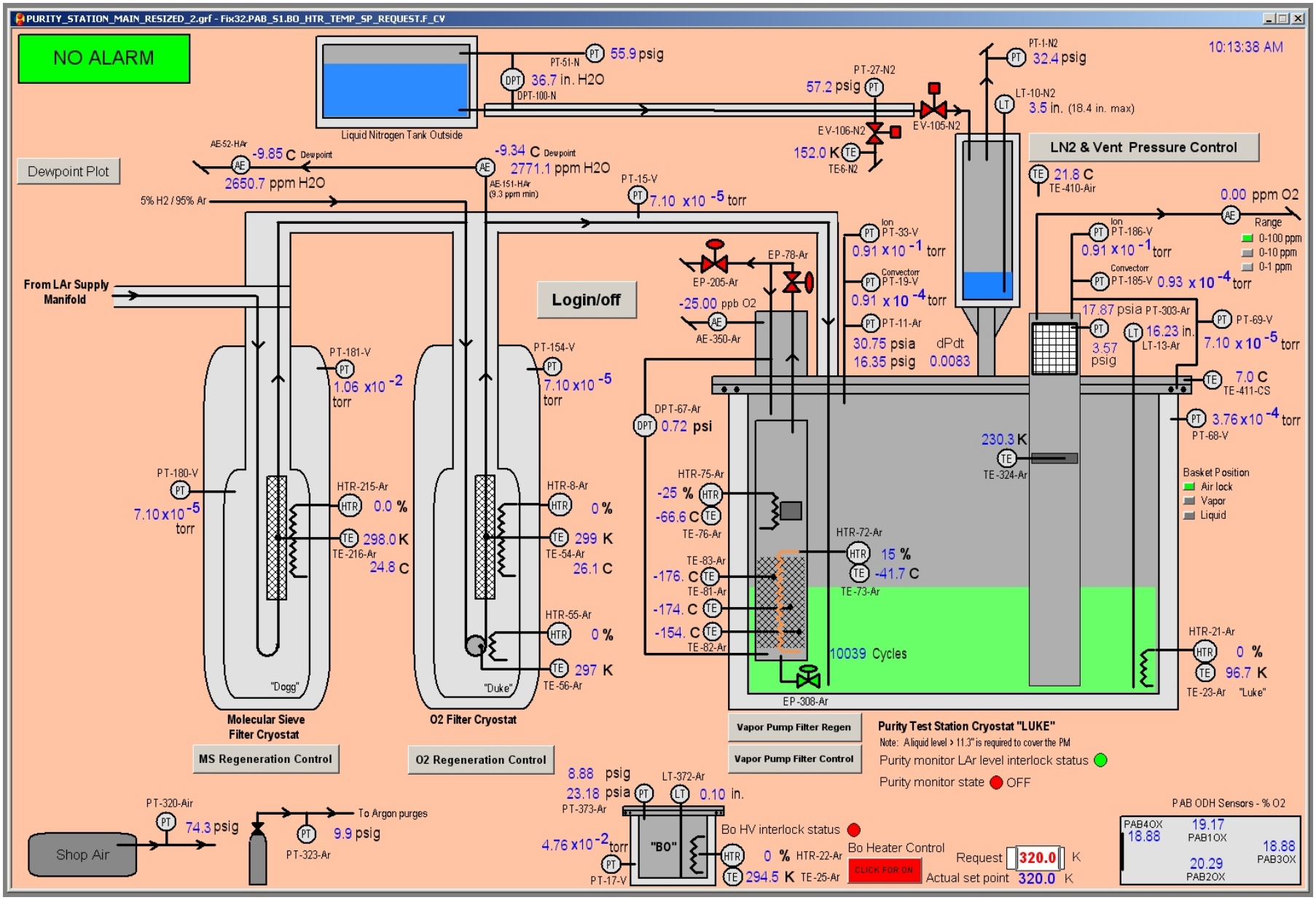

Electron Drift Lifetime Monitor

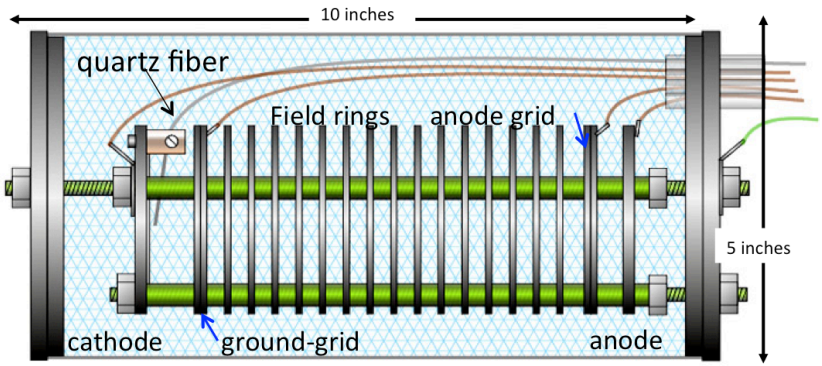

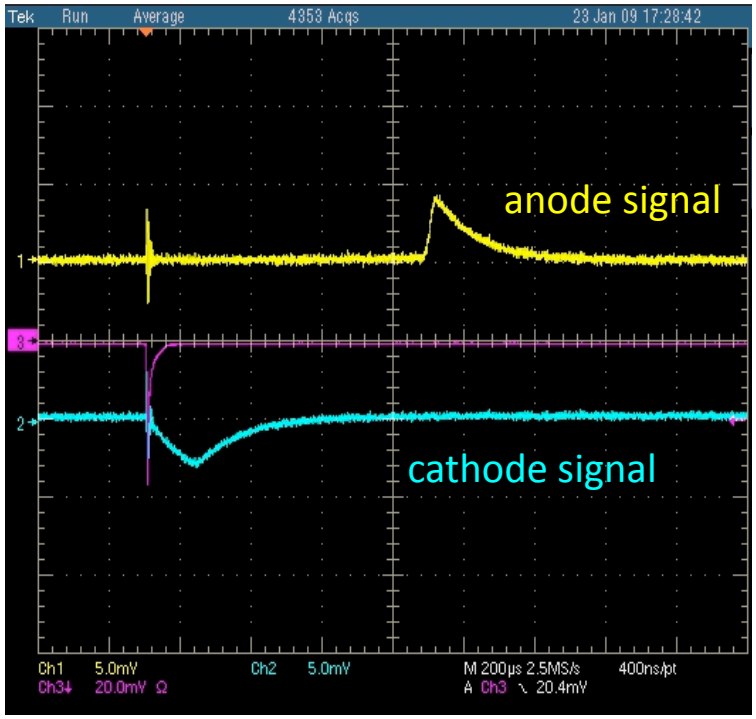

PrM scope signal

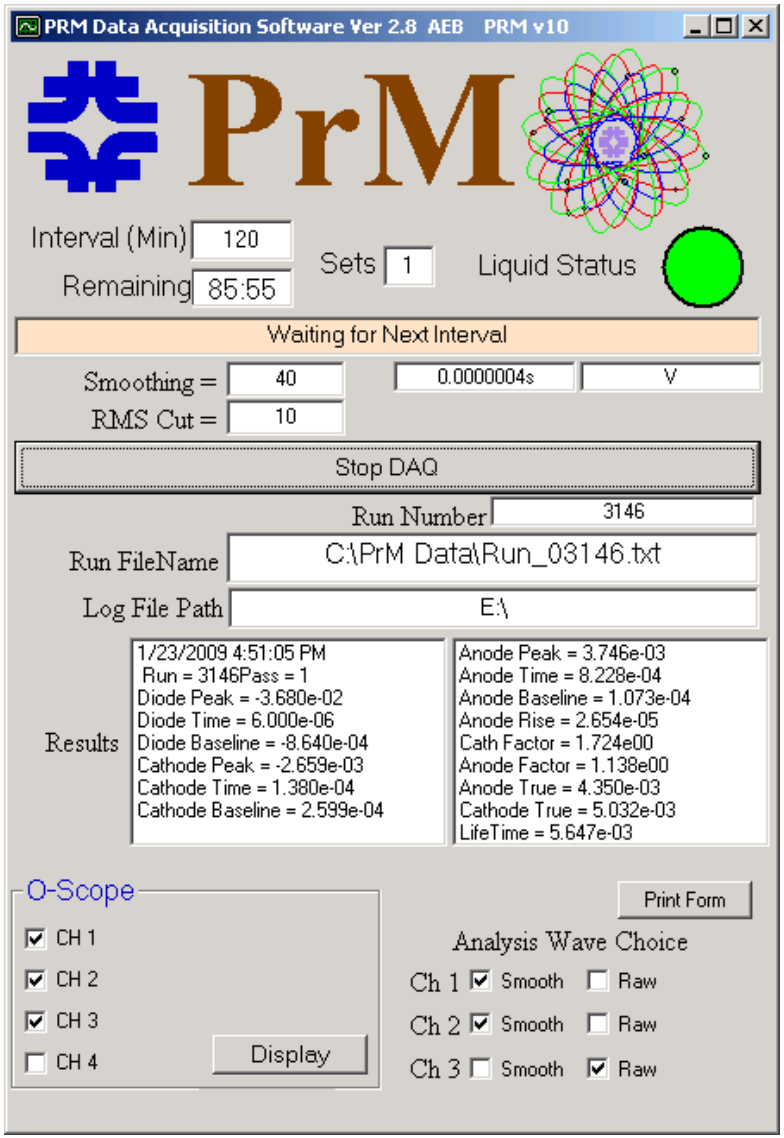

PrM automation software

In summary:

We have a set of tools, hardware and software, to measure effect of materials on electron drift lifetime.

Program : Test all candidate detector components.

An example set of measurements with the Materials Test System

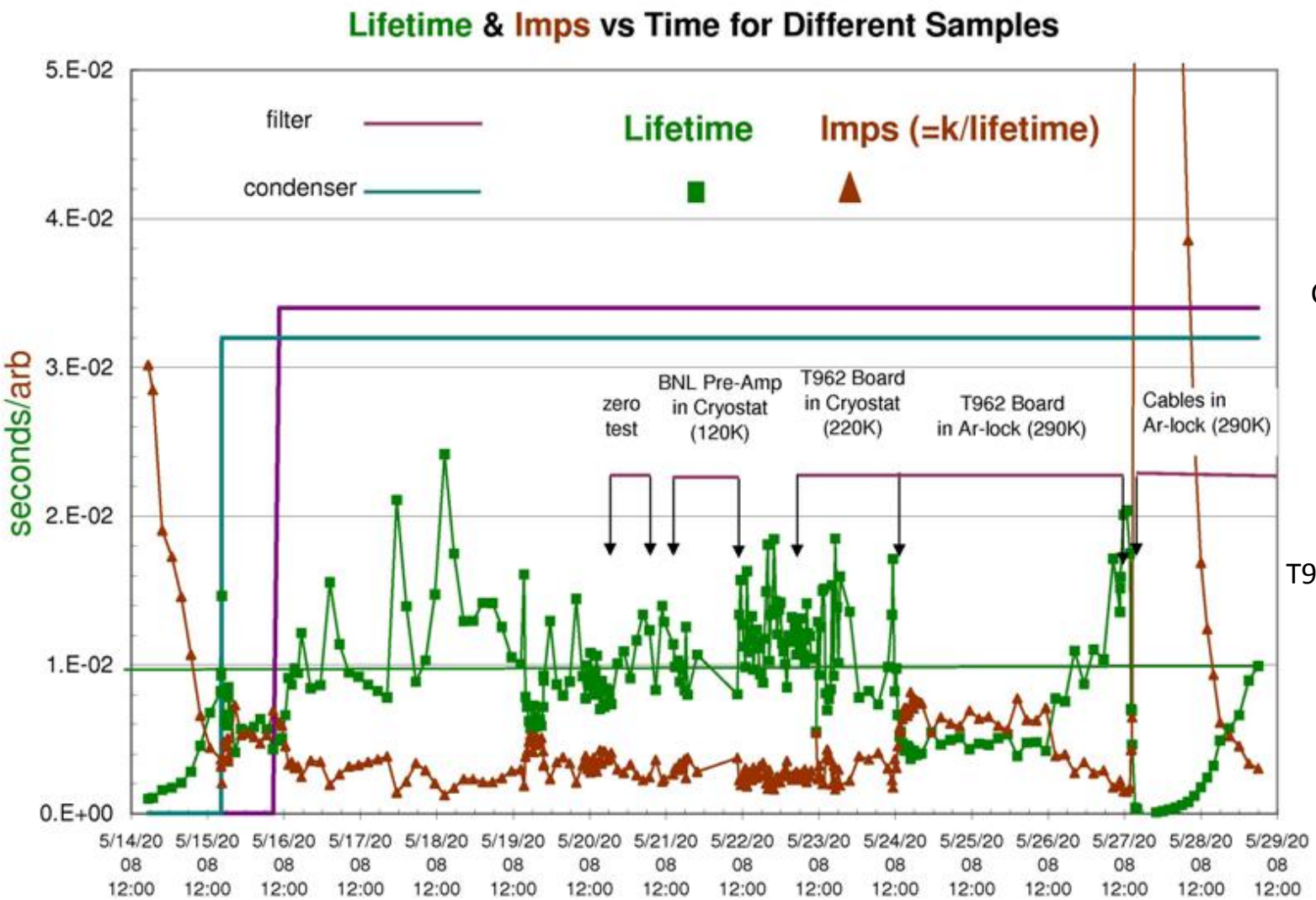

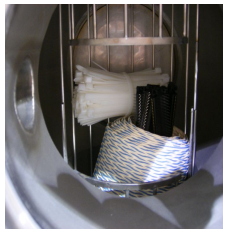

Cables & Cable ties

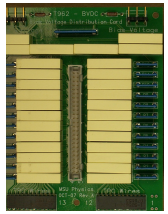

T962 DecouplingBoard

Cold pre-amp

Some Materials Tested

Material	Sample Surface Area (cm^2)	Effect of Material on Electron Drift Lifetime (LT)			Comments
		94 K liquid	≈120 K vapor	≈225 K Vapor	
Red-X Corona Dope[a]	100	None	None	LT Reduced from 8 to 1 ms; recovery observed.	H_2O concentration not monitored.
Deactivated Rosin Flux[b]	200	None	Not Tested	LT reduced from 8 to 1.5 ms recovery observed	H_2O concentration not monitored.
FR4	1000	None	Not Tested	LT reduced from 8 to <1 ms	Outgassed enough H_2O at 225 K to saturate sintered metal return.
Taconic[c]	600	None	Not Tested	LT reduced.	Sample outgases water at 225 K.
Hitachi BE 67G[d]	300	None	Not Tested	LT reduced; recovery observed	Sample outgases water at 225K; outgassing reduced over time.
TacPreg[e]	200	None	None	LT reduced; recovery observed	Sample outgases water at 225 K; outgassing reduced over time.
FR4, y-plane wire endpoint for uBooNE	225	None	None	LT reduced from 8 to 3 ms	Sample outgases water at 225 K.
FR4, y-plane wire endpoint for uBooNE	225	None	None	None	Sample was evacuated in airlock prior to testing
FR4, y-plane wire cover for uBooNE	225	None	None	None	Sample was evacuated in airlock prior to testing
Devcon 5-min epoxy	100	None	None	LT reduced from 10 to 6 ms; some recovery observed	Sample outgases water at 225 K.

[a]GC Electronics, Part # 10-5002

[b]Kester Soldering Flux, Formula #1587, heated to approximately 450 F for 1 minute.

[c]Taconic #TPG-30-0045-35, Grade TPG-30, Lot #CBD7002 107053001

[d]Fiberglass laminate of non-halogenated material.

[e]Taconic #TLG-30-0600-HH/HH, Lot #10707111B, copper cladding mechanically removed from one side.

Some Materials Tested

Material	Sample Surface Area (cm^2)	Effect of Material on Electron Drift Lifetime (LT)			Comments
		94 K liquid	≈120 K vapor	≈225 K Vapor	
Red-X Corona Dope[a]	100	None	None	LT Reduced from 8 to 1 ms; recovery observed.	H_2O concentration not monitored.
Deactivated Rosin Flux[b]	200	None	Not Tested	LT reduced from 8 to 1.5 ms recovery observed	H_2O concentration not monitored.
FR4	1000	None	Not Tested	LT reduced from 8 to <1 ms	Outgassed enough H_2O at 225 K to saturate sintered metal return.
Taconic[c]	600	None	Not Tested	LT reduced.	Sample outgases water at 225 K.
Hitachi BE 67G[d]	300	None	Not Tested	LT reduced; recovery observed	Sample outgases water at 225K; outgassing reduced over time.
TacPreg[e]	200	None	None	LT reduced; recovery observed	Sample outgases water at 225 K; outgassing reduced over time.
FR4, y-plane wire endpoint for uBooNE	225	None	None	LT reduced from 8 to 3 ms	Sample outgases water at 225 K.
FR4, y-plane wire endpoint for uBooNE	225	None	None	None	Sample was evacuated in airlock prior to testing
FR4, y-plane wire cover for uBooNE	225	None	None	None	Sample was evacuated in airlock prior to testing
Devcon 5-min epoxy	100	None	None	LT reduced from 10 to 6 ms; some recovery observed	Sample outgases water at 225 K.

– no effect on lifetime when material in LAr

The effect of H20

First Operation of the Condenser on the MTS Cryostat

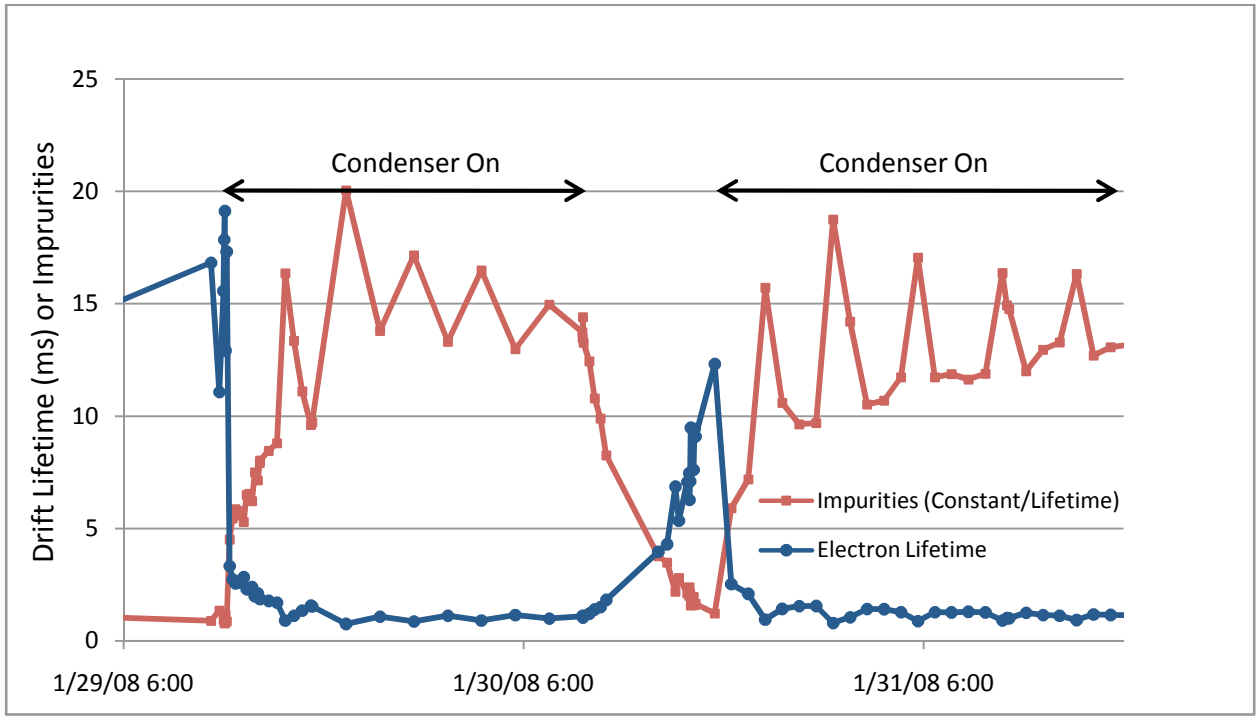

A disaster – electron drift lifetime destroyed in 30 minutes

The effect of H20

Hypotheses for Condenser Problem:

Condenser Introduced contamination

Electrostatics - charge build up on drops of LAr

Neither – full story in
NIM, A 608 (2009), pp. 251-258

Remedy (found before understanding)

Return condensed Argon through fine metal filter (originally installed to discharge `ions').

Ion-rod disproved ion theory.

When filter clogged and lifetime deteriorated, we suspected icing, and found ppb sensitive water monitor.

Condenser is efficient at injecting any contaminant in ullage back into the liquid.

Now run with return pipe of sintered metal filled with Molecular Sieve.

Original Condenser Installation

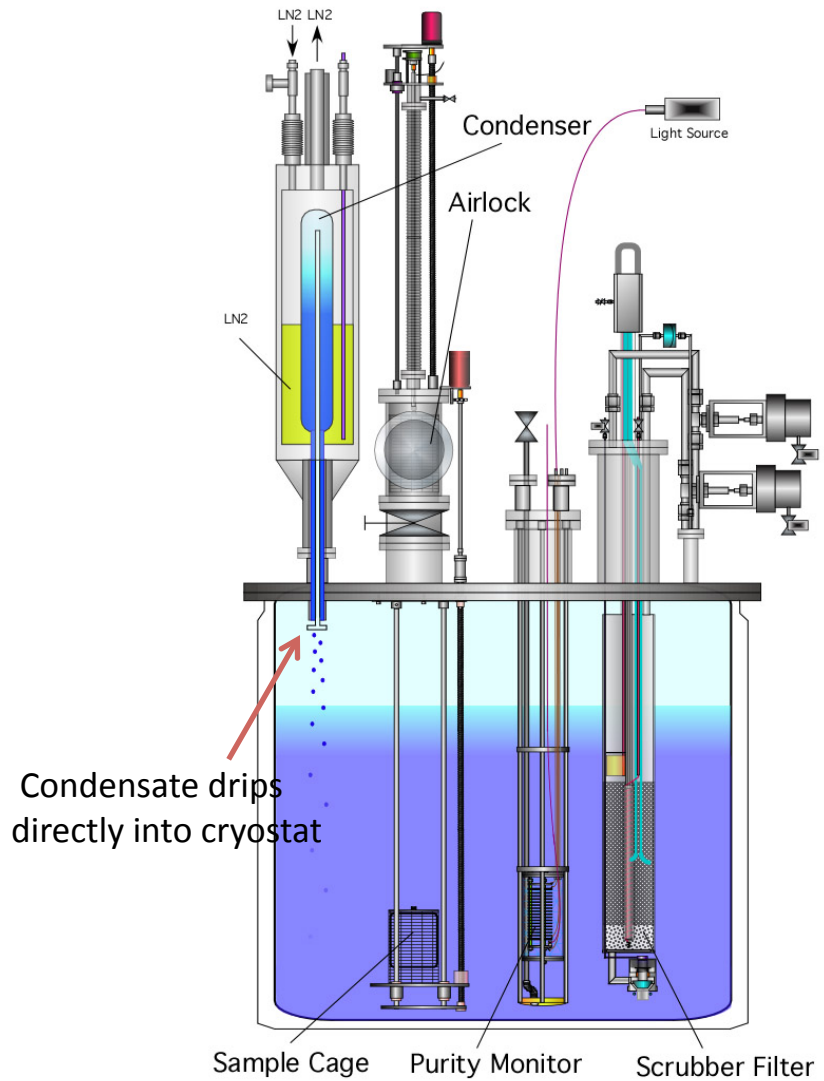

The effect of H20

FR-4 based circuit board – from Argonlock *with evacuation*

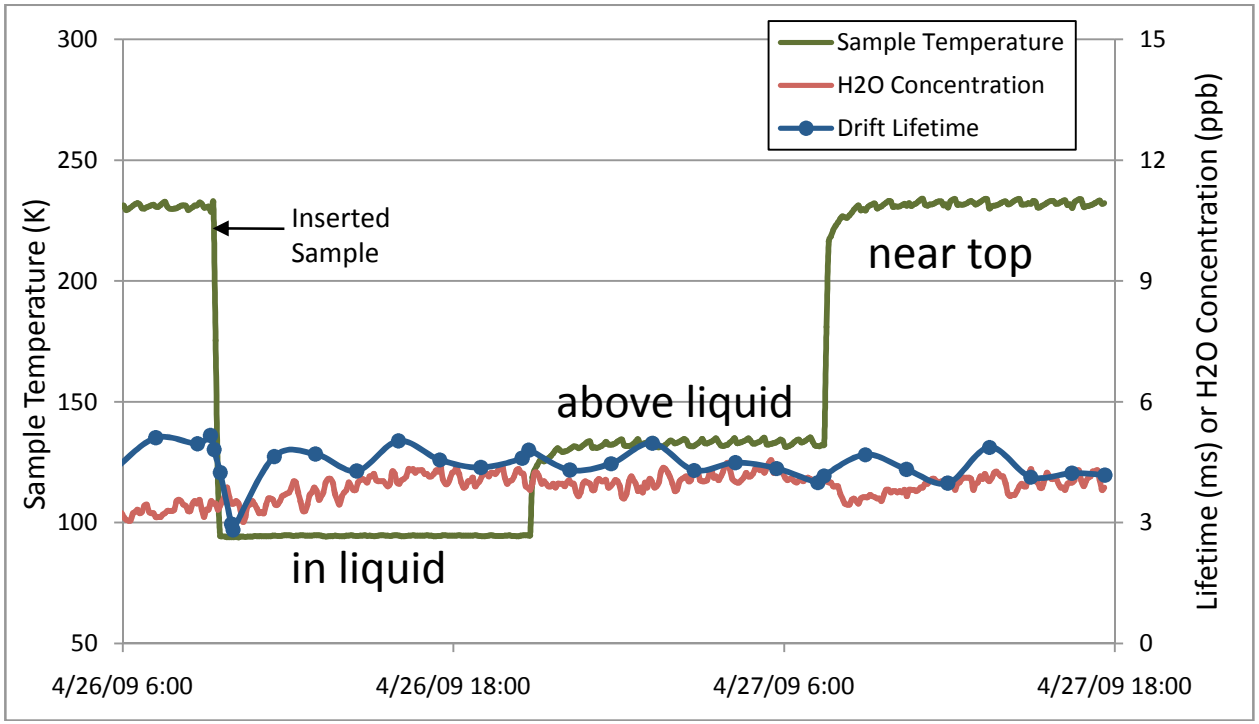

Little change in H20 reading and little change in lifetime

The effect of H20

FR-4 based circuit board – from Argonlock *with purging only*

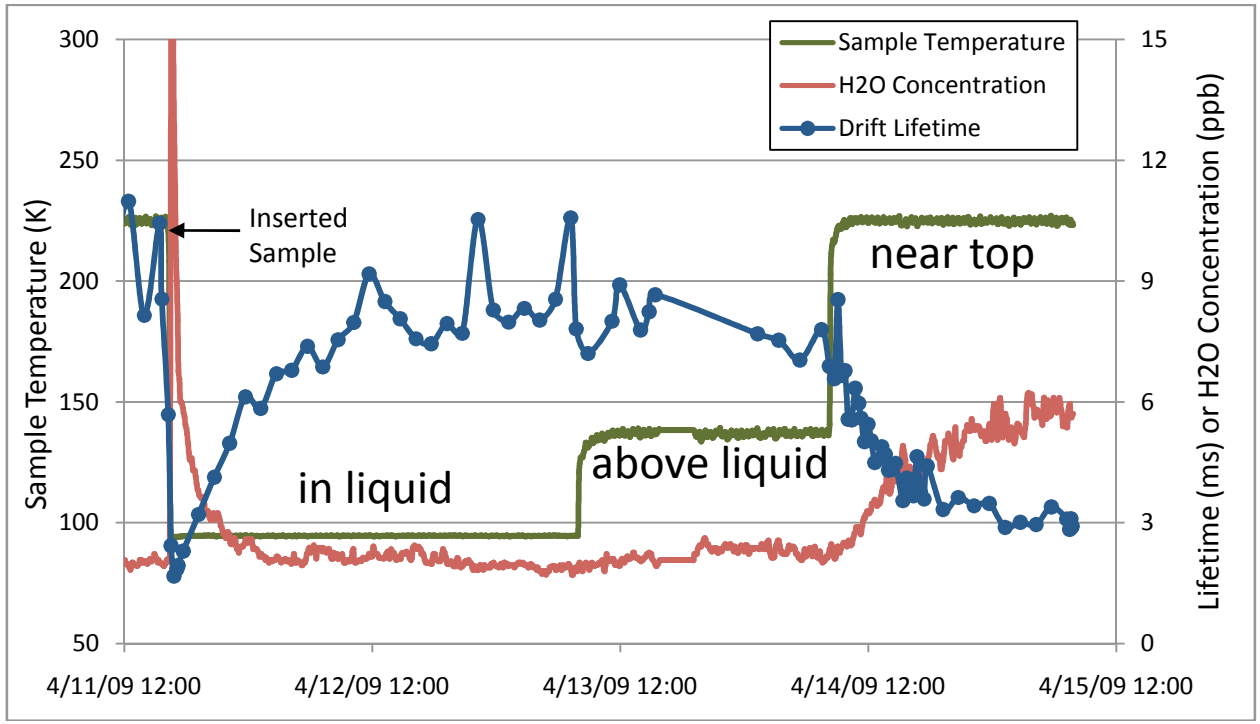

Significant change in H20 reading and significant reduction in lifetime

Also – note initial lifetime better – and H20 reading lower

The effect of H20

In general: Lifetime inversely proportional to H20 concentration in gas

Constant of proportionality independent of material
– so H20 is not just a marker and is probably the prime contaminant

Calculations of effective concentration in liquid suggest H20 as bad 02

Implications for material choice and further testing.

Filter Materials

We make and regenerate our own filters using material from BASF (originally Engelhard) for O2 and Molecular Sieve from Aldrich

We have the capability to use other materials but have not pursued that (yet?)

We are interested in the capacity of filter materials before `breakthrough' - the capacity seems much less than one would calculate from the quoted area of copper.

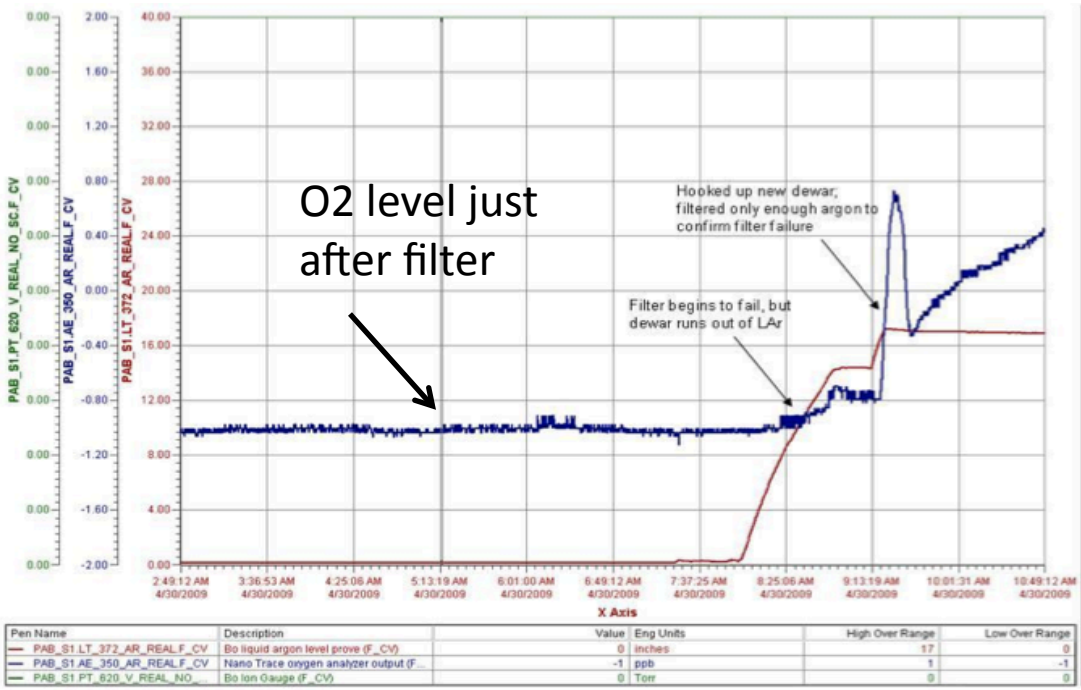

Plot of O2 level after ~ 0.5 g O2 through filter. Note the `breakthrough' style of behavior.

Plans in the Purity Business at PAB

Run materials in the Materials Test Stand

Measure H20 outgassing rates of materials
- can infer from the MTS data,
- make a dedicated apparatus (thinking how to)

Measure Capacity of Filter Materials and parameters thereof (eg flow rate dependence)

Install Condenser with liquid and/or gas phase filtration to test effectiveness of each.

Condenser, filter and vapor pump all in one.

(under assembly at present)

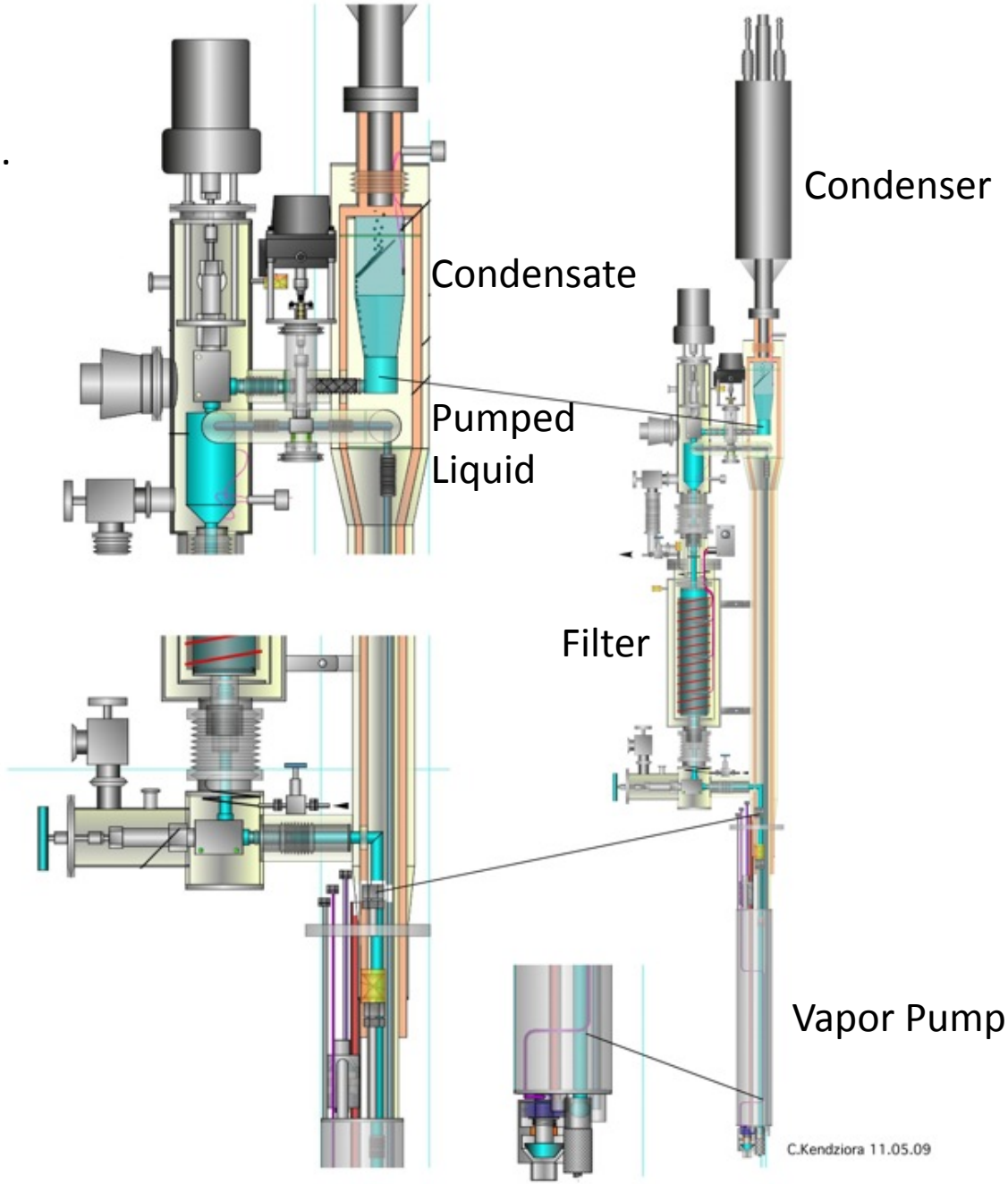

For testing passive filters

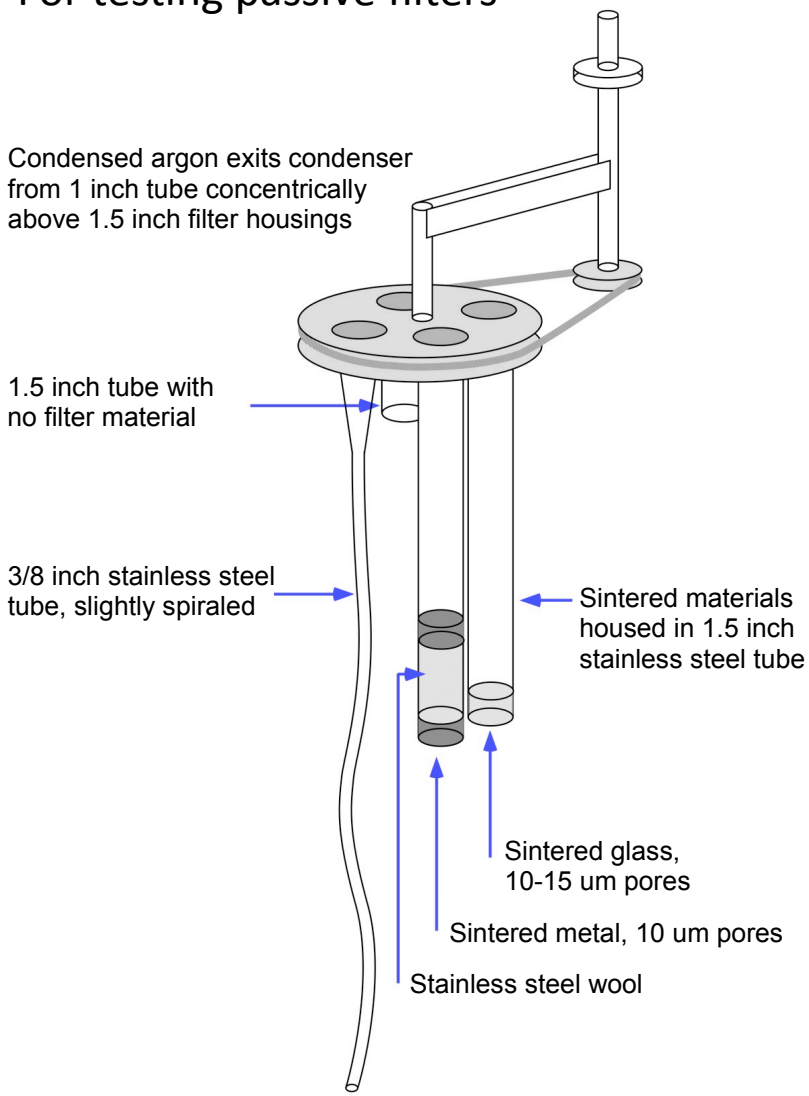

Schematic of condenser inlet and return

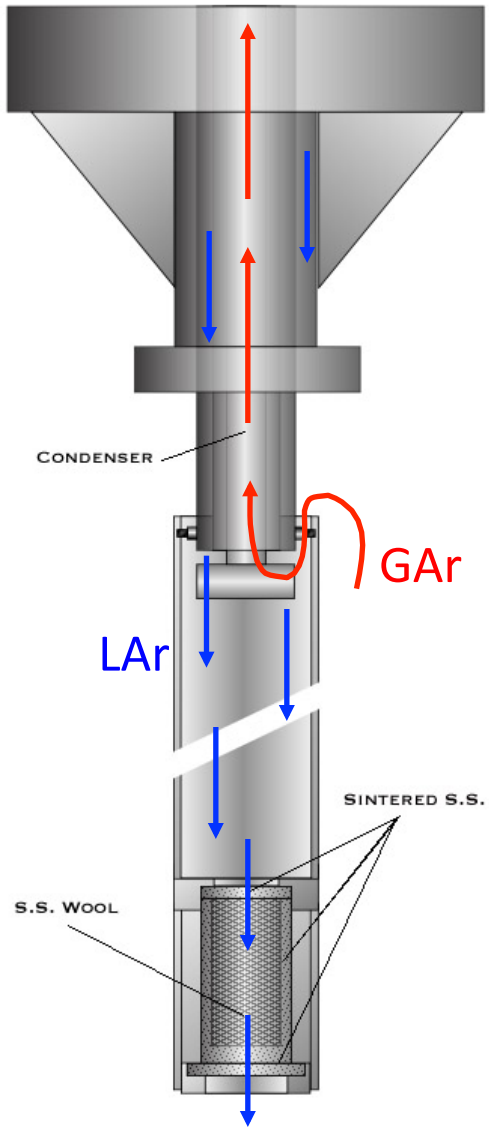

The effect of H20

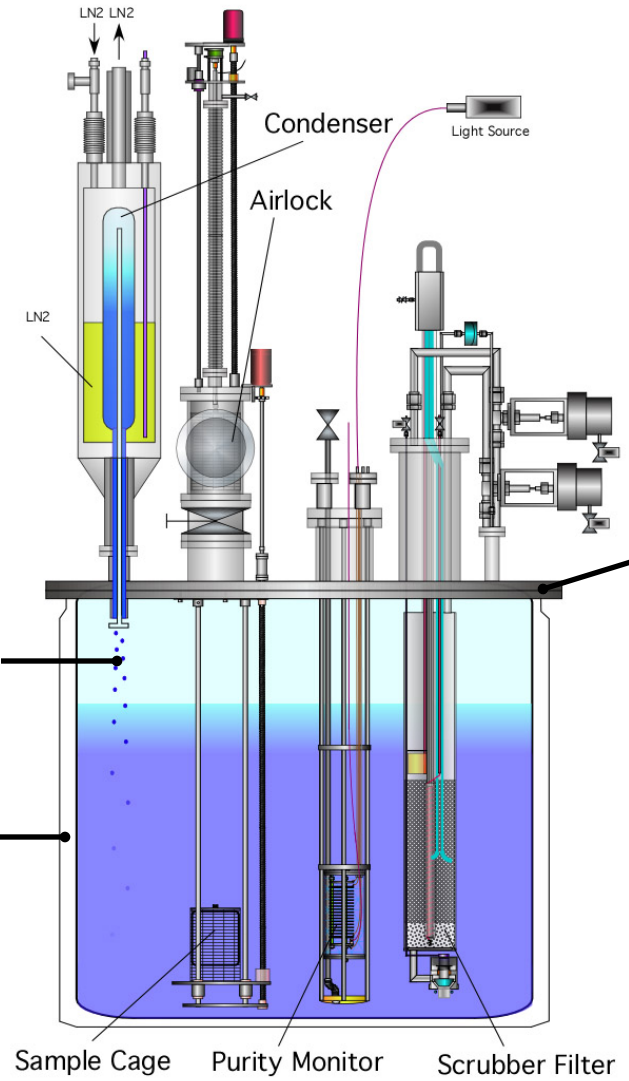

Liquid from condenser fell back into cryostat unfiltered

Vacuum jacketed sides

Un-insulated removable top flange, typically near room temperature, sealed with double o-rings