Argon Purity

Materials Qualification for long drift Liquid Argon TPC

Effect of water on electron drift lifetime

Plans **Material Tests, purging and H20 studies,**
Purity in a large tank without evacuation (LAPD) – Brian Rebel
MicroBooNE

Acknowledge enormous and continuing contribution of ICARUS and other European programs

Argon Source, Materials Test System, and Electronics Test System

Develop purification, check detector materials, TPC for electronics development

Schematic of Materials Test Stand

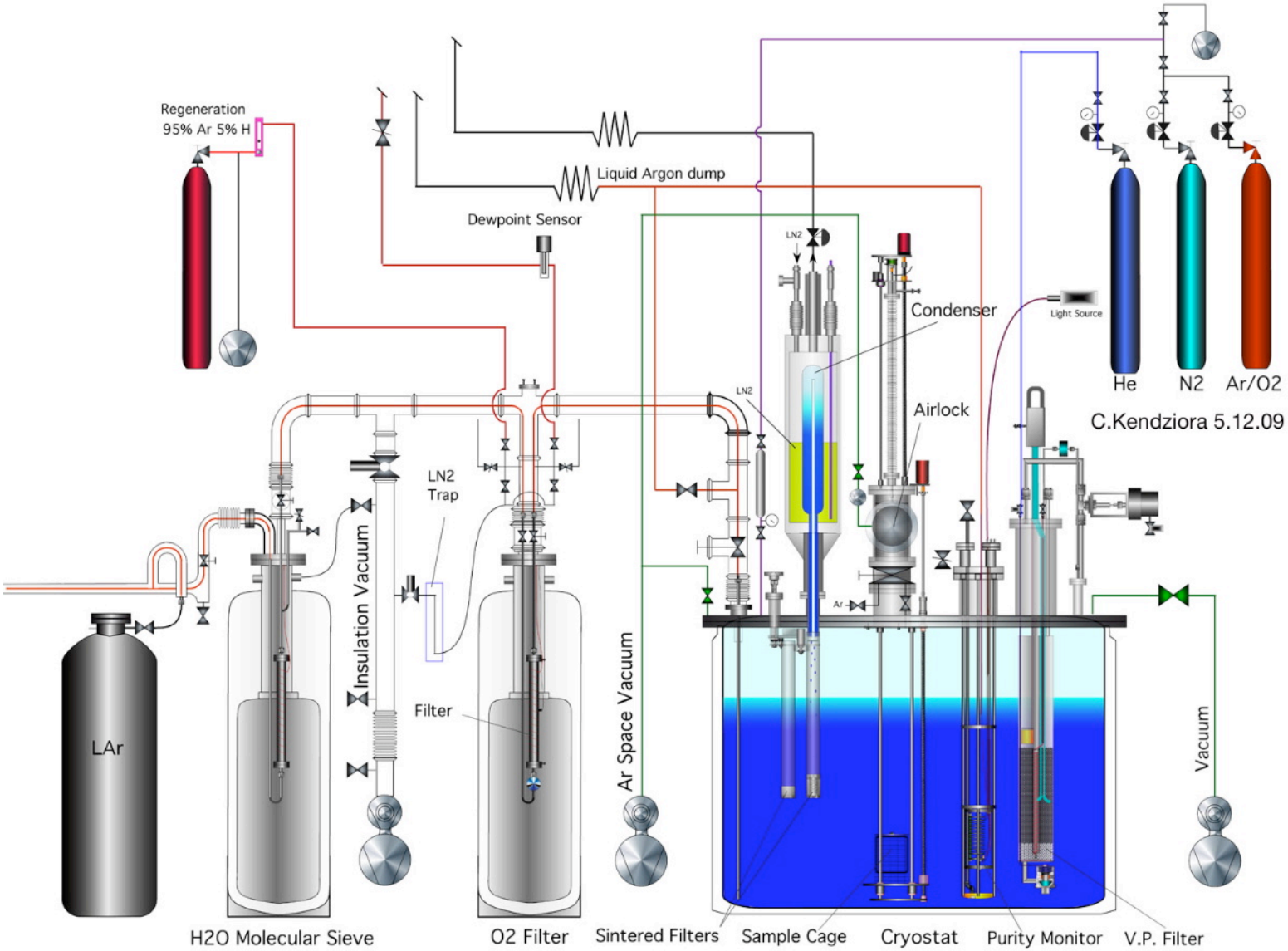

Materials Test Stand

Features of Materials Test Stand

- Can insert materials into known clean argon
- Can insert materials after purging only or after pumping on them.
- Can position materials into liquid and into ullage with range of temperatures.
- Can insert known amounts of contaminant gases
- Nitrogen-based condenser can maintain liquid for long (weeks) studies
- Internal filter-pump can remove contamination introduced by materials – 2hr cycle
- Sample points at Argon Source, after single-pass filters, in cryostat gas and liquid

Measurement Features of Materials Test Stand

- Measure electron drift lifetime with ICARUS style purity monitor
- Measure Oxygen (0.3 ppb sensitivity) with oxygen meter (Delta-F & Tiger Optics)
- Measure H20 in gas (0.3 ppb sensitivity) with water meter (Tiger Optics)
- Cryogenic data, Lifetime Data, analytic instrumentation data in single data-base

Insertion of a material sample into the airlock (argonlock) basket

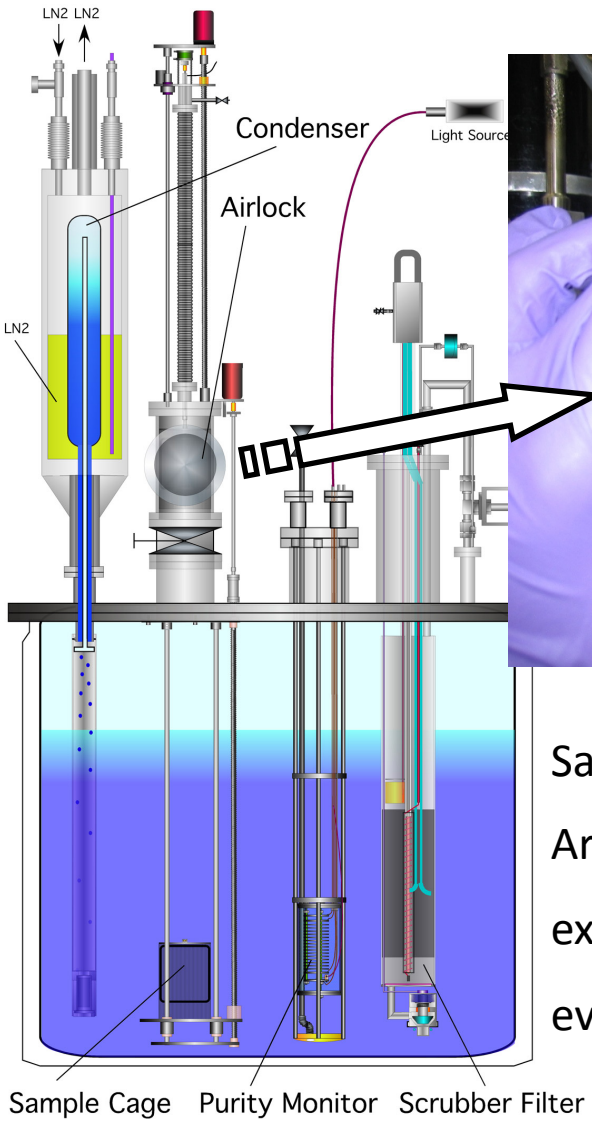

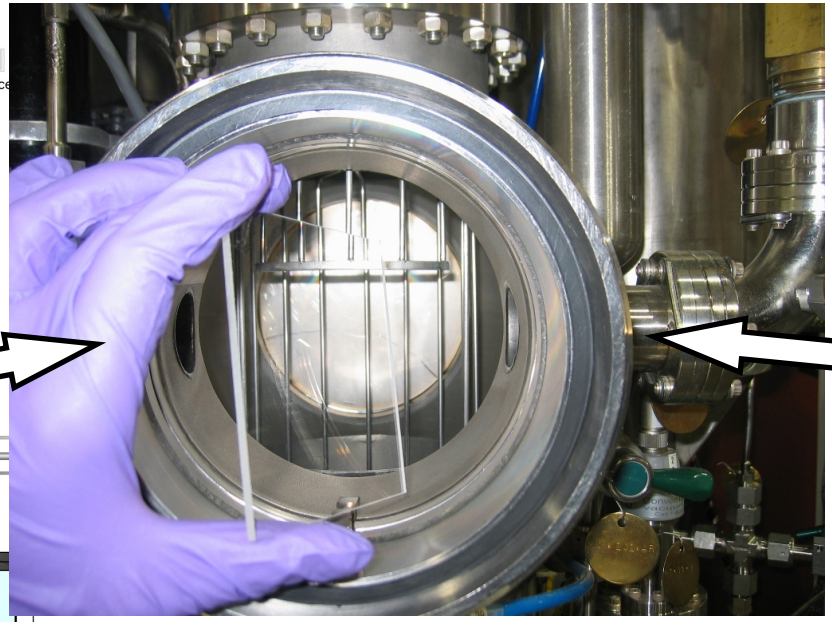

Sample volume 10 cm x 10 cm x 10 cm

Argonlock can be purged with external argon, cryostat argon, and/or evacuated

Cryogenics Control Screen

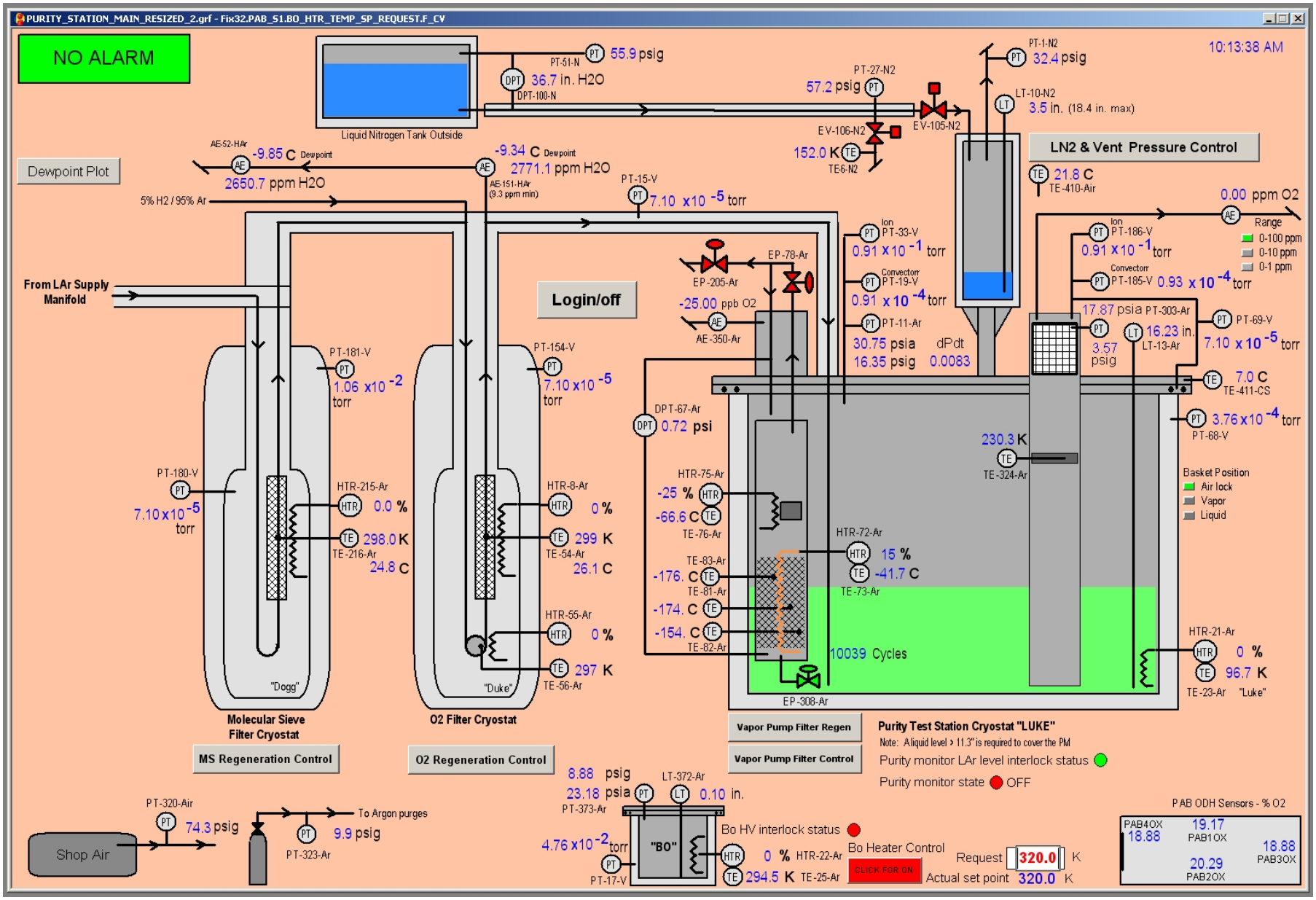

Electron Drift Lifetime Monitor

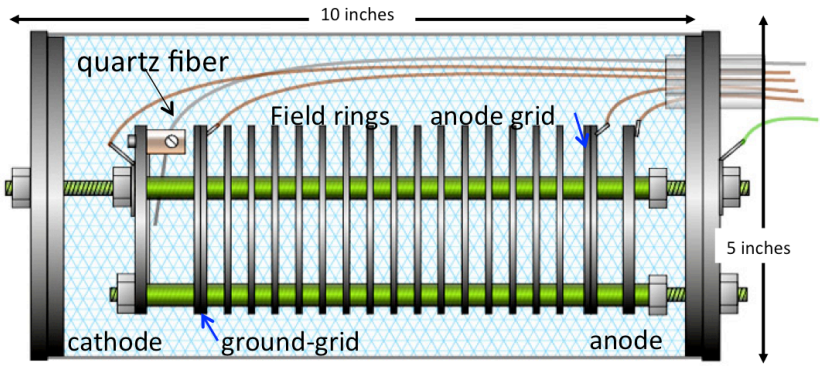

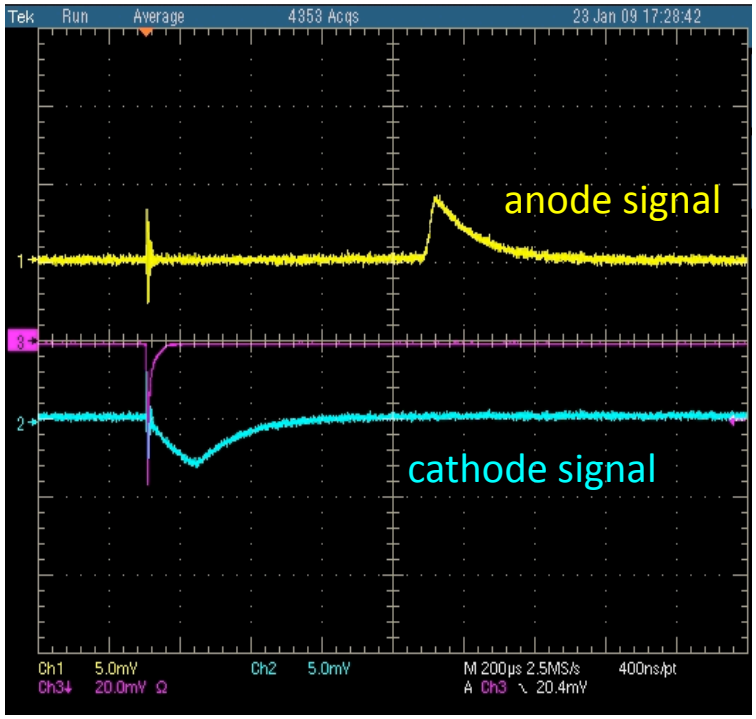

PrM scope signal

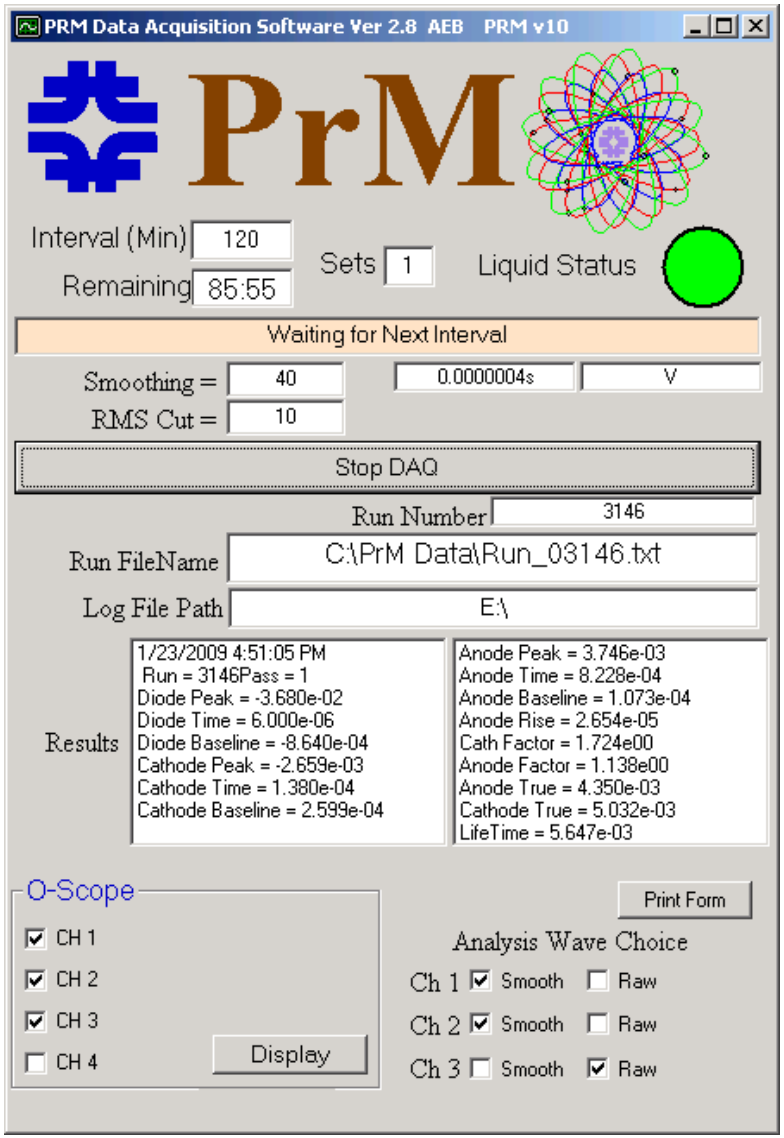

PrM automation software

An example set of measurements with the Materials Test System

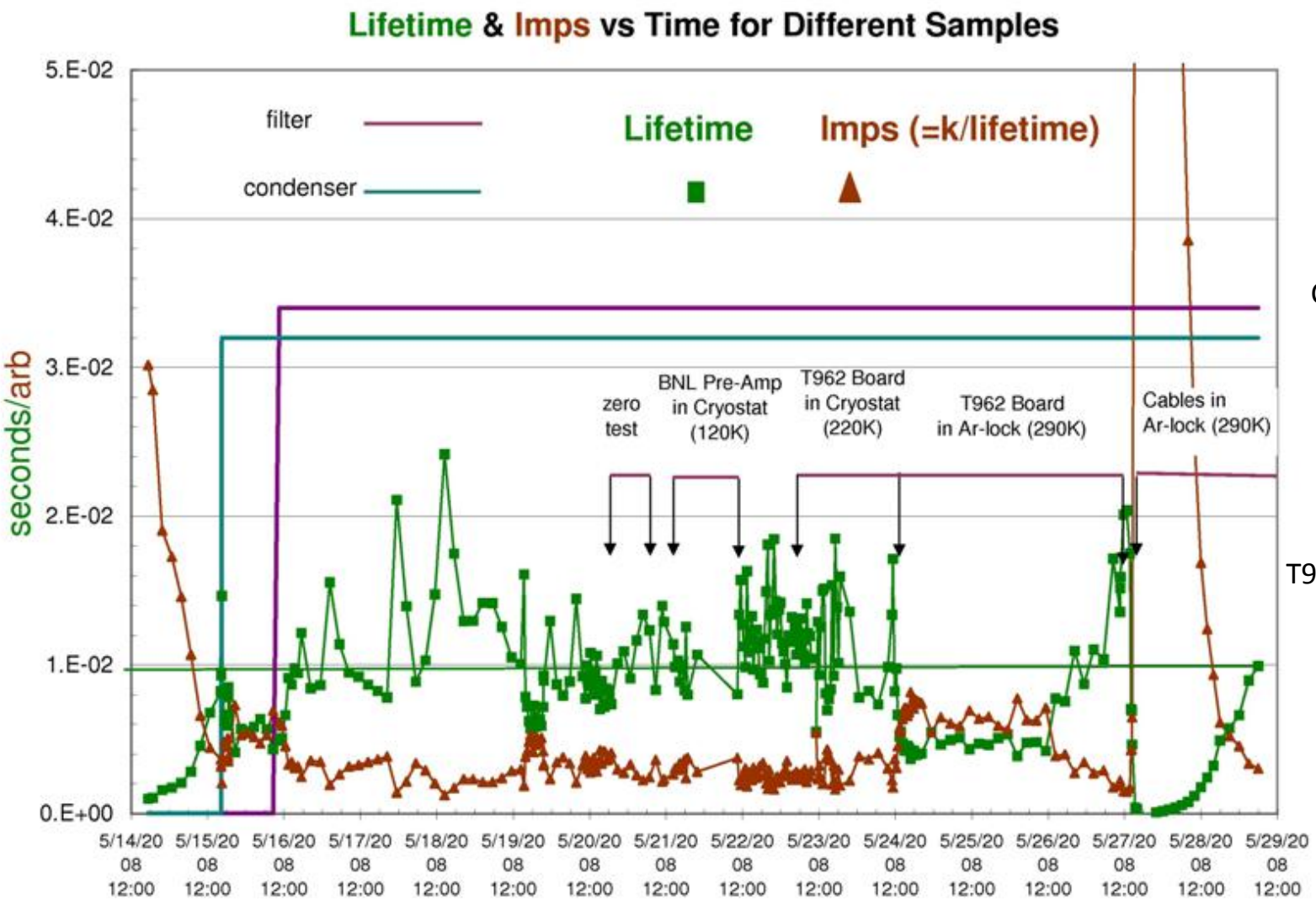

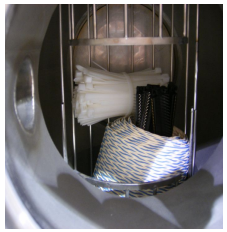

Cables & Cable ties

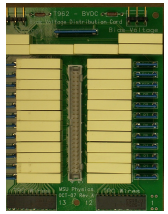

T962 DecouplingBoard

Cold pre-amp

Learning how to do what has been done by others

(cryogenics, purification, purity monitoring - all are now designed & built in the US)

New stuff - our own filter systems,
material test systems,
the effect of H_20,

FERMILAB-TM-2384-E: efficiency of slow purging to remove atmosphere to ppm levels

A regenerable filter for liquid argon purification

A. Curioni [b], B.T. Fleming [b], W. Jaskierny [a], C. Kendziora [a], J. Krider [a], S. Pordes [a], M. Soderberg [b], J. Spitz [b,*], T. Tope [a], T. Wongjirad [b]

[a] Particle Physics Division, Fermi National Accelerator Laboratory, Chicago, IL, USA
[b] Department of Physics, Yale University, New Haven, CT, USA

NIM-A 605:306-311,2009.

A system to test the effect of materials on electron drift lifetime in liquid argon and the effect of water

R. Andrews, W. Jaskierny, H. Jöstlein, C. Kendziora, S. Pordes *, T. Tope

Particle Physics Division, Fermi National Accelerator Laboratory, Batavia, IL 60510, USA

NIM-A 608:251-258,2009.

Some Materials Tested

Material	Sample Surface Area (cm^2)	Effect of Material on Electron Drift Lifetime (LT)			Comments
		94 K liquid	≈120 K vapor	≈225 K Vapor	
Red-X Corona Dope[a]	100	None	None	LT Reduced from 8 to 1 ms; recovery observed.	H_2O concentration not monitored.
Deactivated Rosin Flux[b]	200	None	Not Tested	LT reduced from 8 to 1.5 ms recovery observed	H_2O concentration not monitored.
FR4	1000	None	Not Tested	LT reduced from 8 to <1 ms	Outgassed enough H_2O at 225 K to saturate sintered metal return.
Taconic[c]	600	None	Not Tested	LT reduced.	Sample outgases water at 225 K.
Hitachi BE 67G[d]	300	None	Not Tested	LT reduced; recovery observed	Sample outgases water at 225K; outgassing reduced over time.
TacPreg[e]	200	None	None	LT reduced; recovery observed	Sample outgases water at 225 K; outgassing reduced over time.
FR4, y-plane wire endpoint for uBooNE	225	None	None	LT reduced from 8 to 3 ms	Sample outgases water at 225 K.
FR4, y-plane wire endpoint for uBooNE	225	None	None	None	Sample was evacuated in airlock prior to testing
FR4, y-plane wire cover for uBooNE	225	None	None	None	Sample was evacuated in airlock prior to testing
Devcon 5-min epoxy	100	None	None	LT reduced from 10 to 6 ms; some recovery observed	Sample outgases water at 225 K.

– no effect on lifetime when material in LAr

In summary:

We have a set of tools, hardware and software, to measure effect of materials on electron drift lifetime.

We plan to carry these tools throughout the liquid argon program

Materials Test Stand Program : Test all candidate detector components.

The effect of H20

FR-4 based circuit board – from Argonlock *with evacuation*

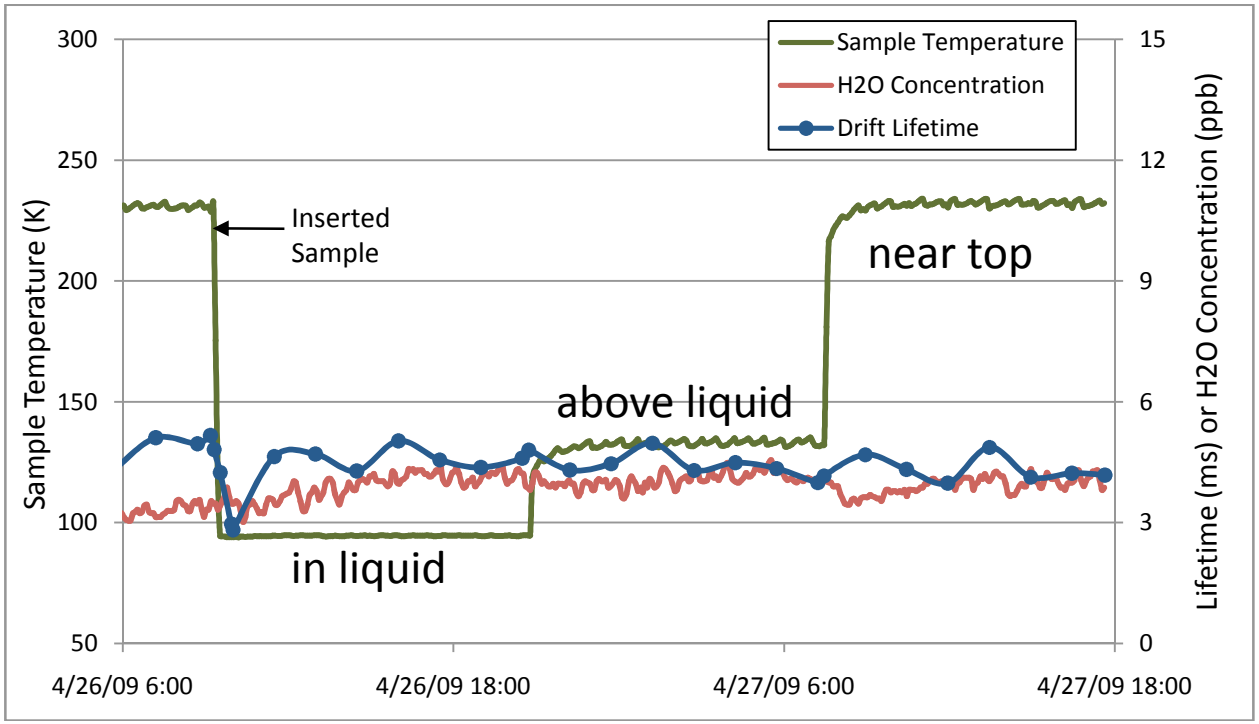

Little change in H20 reading and little change in lifetime

The effect of H20

FR-4 based circuit board – from Argonlock *with purging only*

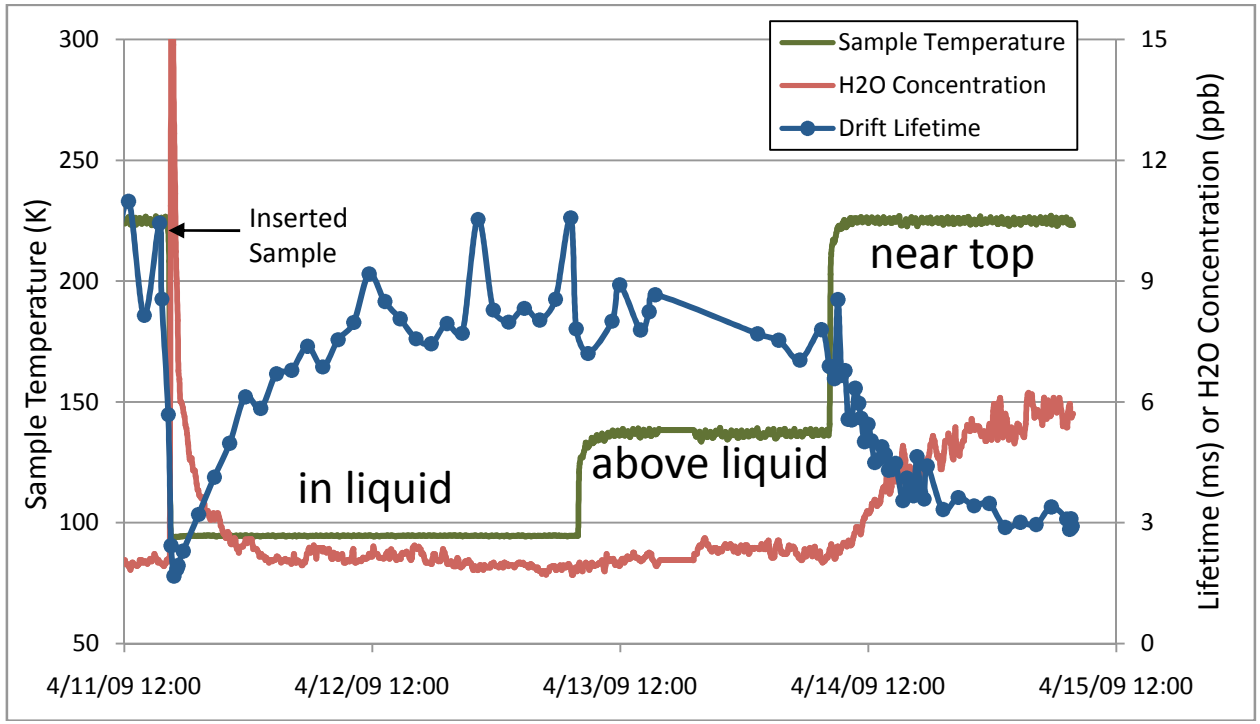

Significant change in H20 reading and significant reduction in lifetime

Also – note initial lifetime better – and H20 reading lower

Effect of H20

Material	Sample Surface Area (cm^2)	Effect of Material on Electron Drift Lifetime (LT)			Comments
		94 K liquid	≈120 K vapor	≈225 K Vapor	
Red-X Corona Dope[a]	100	None	None	LT Reduced from 8 to 1 ms; recovery observed.	H_2O concentration not monitored.
Deactivated Rosin Flux[b]	200	None	Not Tested	LT reduced from 8 to 1.5 ms recovery observed	H_2O concentration not monitored.
FR4	1000	None	Not Tested	LT reduced from 8 to <1 ms	Outgassed enough H_2O at 225 K to saturate sintered metal return.
Taconic[c]	600	None	Not Tested	LT reduced.	Sample outgases water at 225 K.
Hitachi BE 67G[d]	300	None	Not Tested	LT reduced; recovery observed	Sample outgases water at 225K; outgassing reduced over time.
TacPreg[e]	200	None	None	LT reduced; recovery observed	Sample outgases water at 225 K; outgassing reduced over time.
FR4, y-plane wire endpoint for uBooNE	225	None	None	LT reduced from 8 to 3 ms	Sample outgases water at 225 K.
FR4, y-plane wire endpoint for uBooNE	225	None	None	None	Sample was evacuated in airlock prior to testing
FR4, y-plane wire cover for uBooNE	225	None	None	None	Sample was evacuated in airlock prior to testing
Devcon 5-min epoxy	100	None	None	LT reduced from 10 to 6 ms; some recovery observed	Sample outgases water at 225 K.

The effect of H20

In general: Lifetime inversely proportional to H20 concentration in gas

Constant of proportionality independent of material
– so H20 is not just a marker and is probably the prime contaminant

Calculations of effective concentration in liquid suggest H20 as bad 02

Lessons Learned

Condensate must be filtered before return

Need to understand effectiveness of purging in removing water

Filter Materials

We make and regenerate our own filters using material from BASF (originally Engelhard) for O2 and Molecular Sieve from Aldrich

We have the capability to use other materials but have not pursued that (yet?)

We are interested in the capacity of filter materials before `breakthrough' - the capacity seems much less than one would calculate from the quoted area of copper.

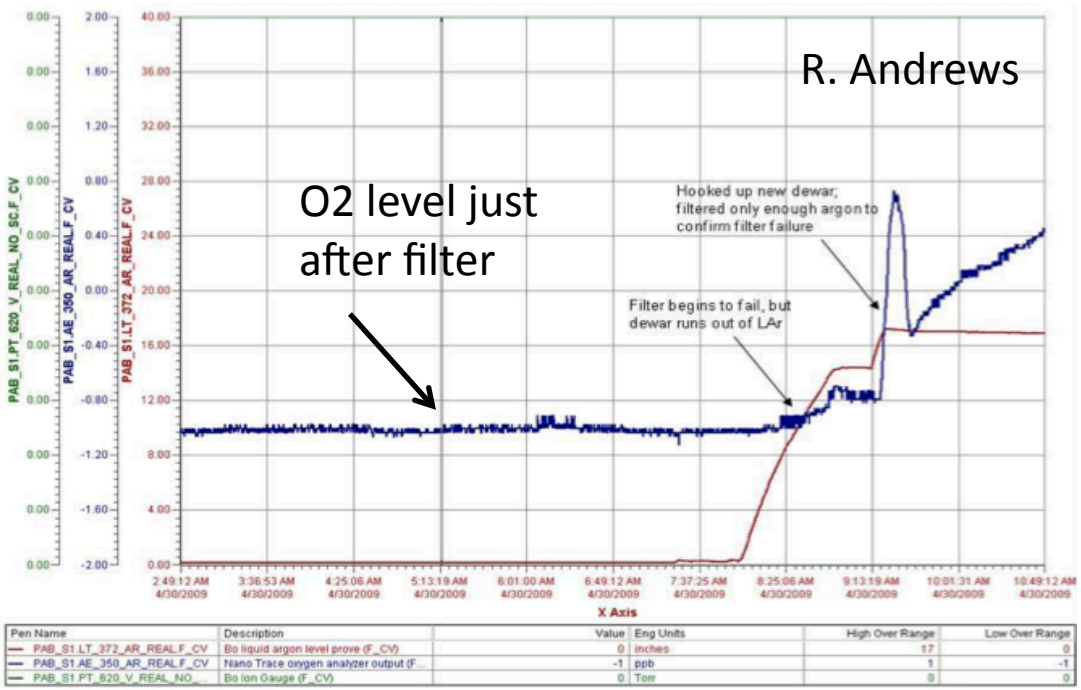

Plot of O2 level after ~ 0.5 g O2 through filter.
Note the `breakthrough' style of behavior.

Plans in the Purity Business at PAB

Run materials in the Materials Test Stand

Measure H20 out-gassing rates of materials
- can infer from the MTS data,
- make a dedicated apparatus (thinking how to)

Measure effectiveness of purging vs time and temperature

Measure Capacity of Filter Materials and parameters thereof (eg flow rate dependence)

Install Condenser with liquid and gas phase filtration capability to test effectiveness of each.

Condenser, filter and vapor pump all in one.

(under assembly at present)

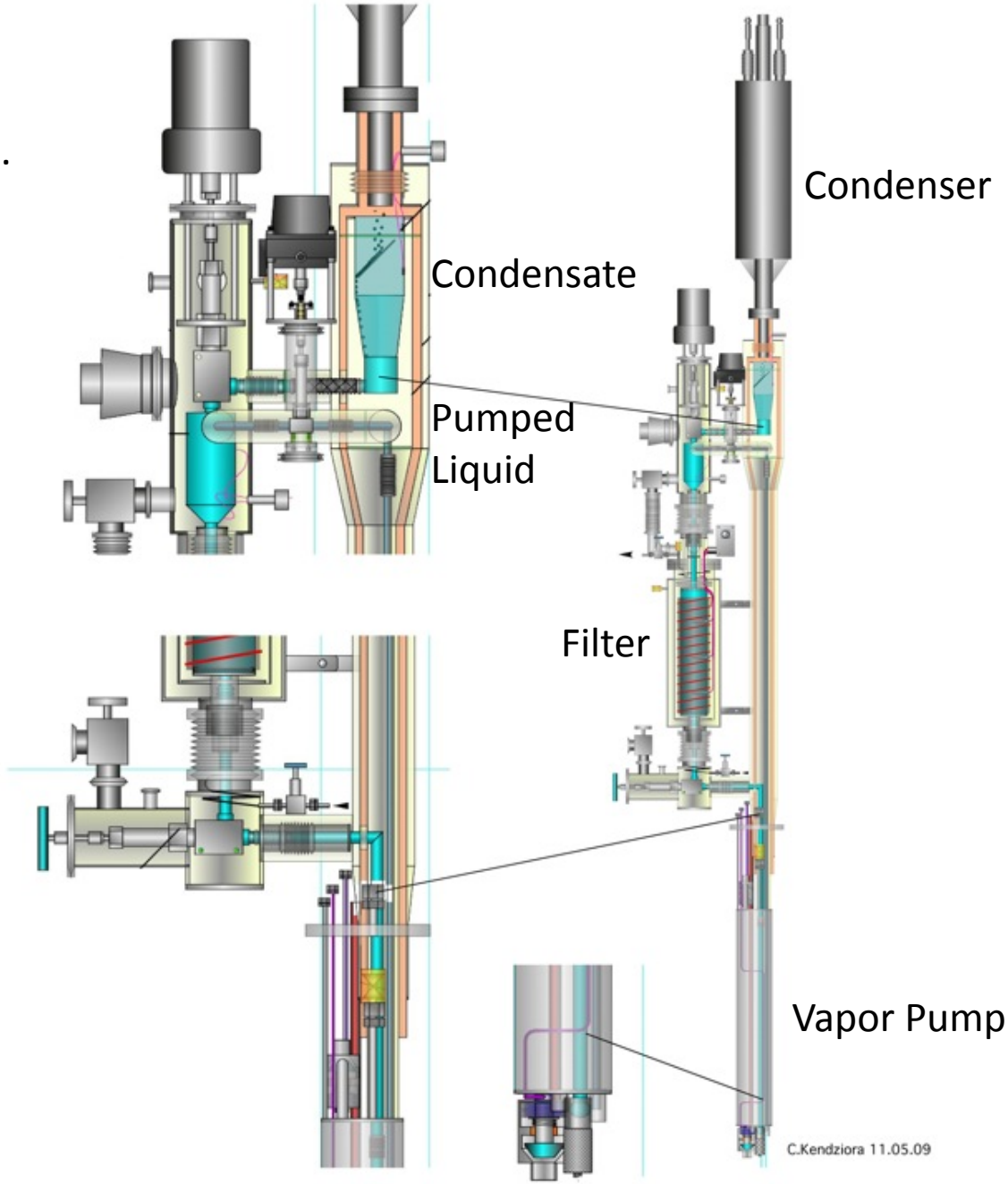

MicroBooNE

Single-wall, Foam Insulated Evacuable Cryostat – 200 tons Liquid Argon

~ 9,000 Wire TPC – drift distance 2.6 m

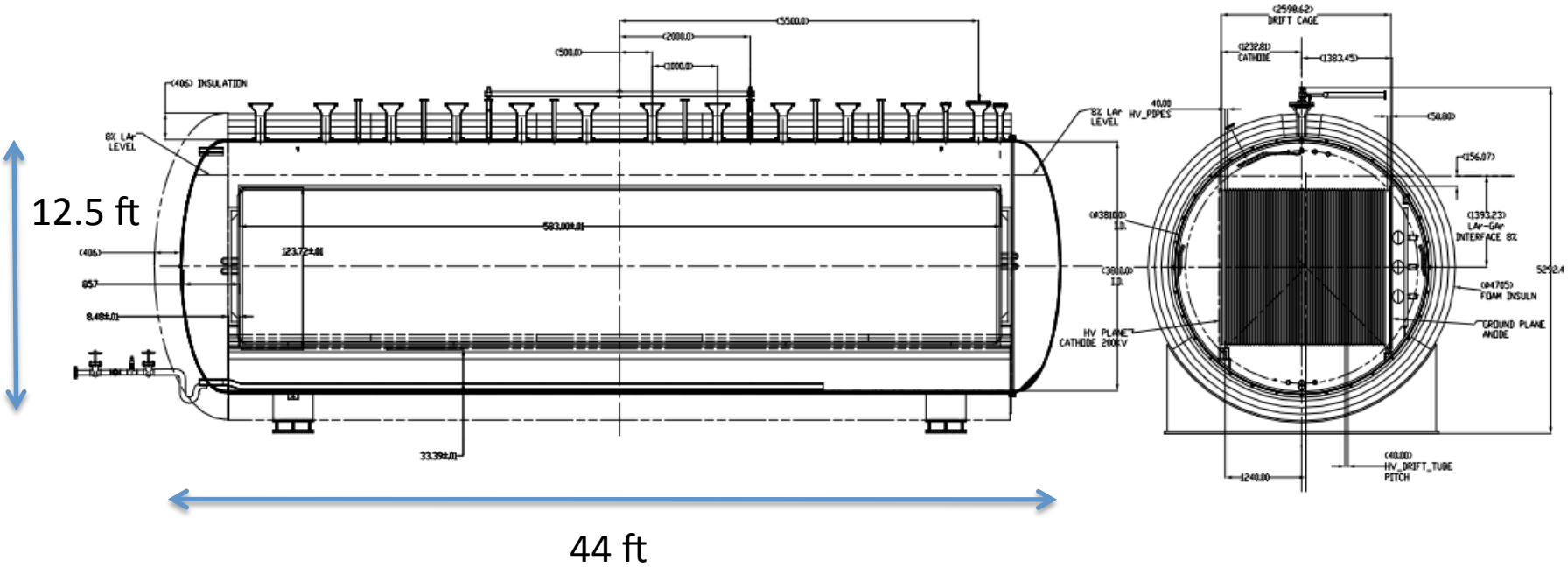

MicroBooNE Cryogenics and Purification Schematic

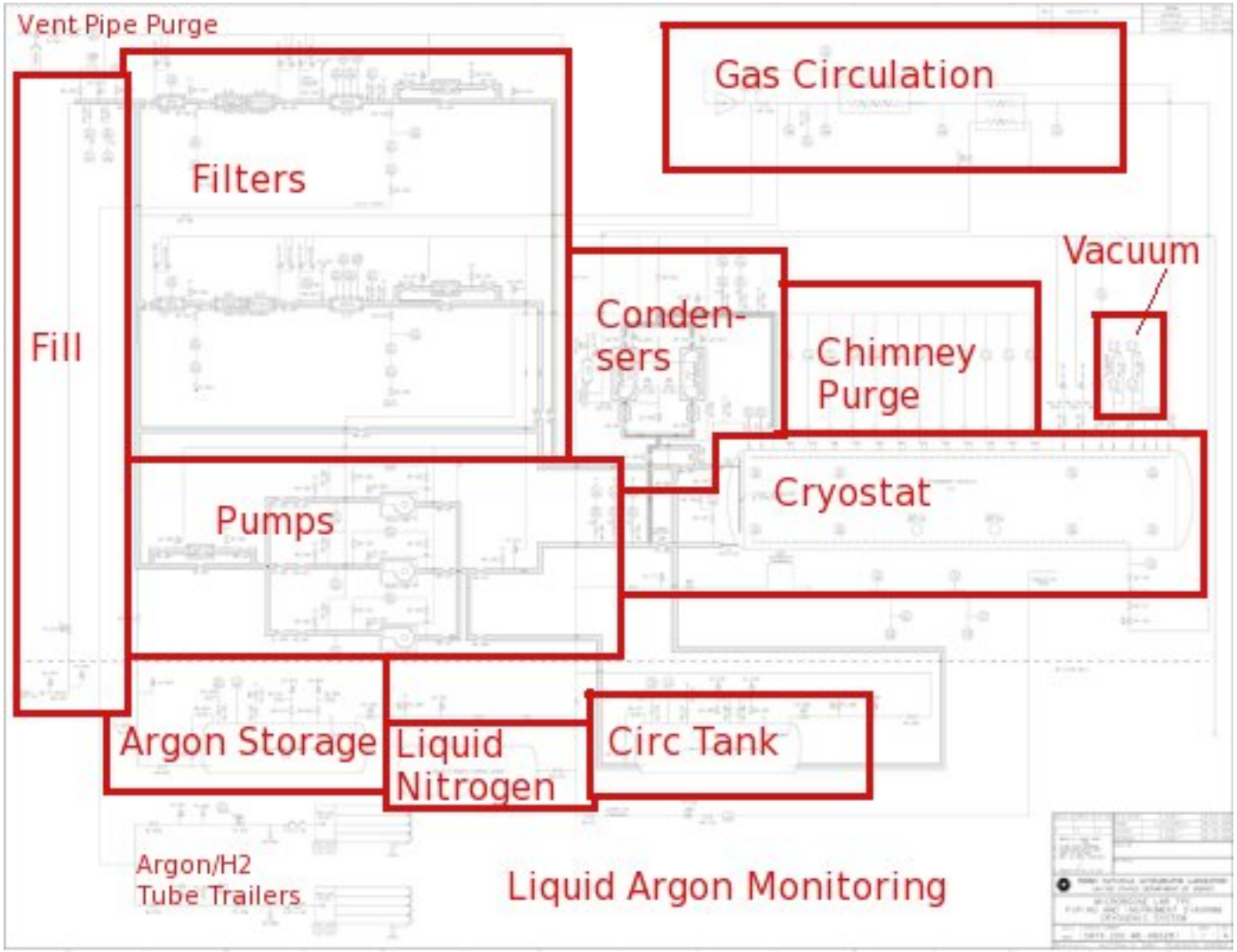

Role of MicroBooNE

Plan is to purge vessel to `purity' – details will be based on LAPD experience.

Liquid Recirculation and Purification specified - for 1 day cycle

Design of the Gas Circulation for Purification is under development –
needs input from MTS and other purging studies.

If MicroBooNE purging to purity works, it is full validation of plan to go without evacuation

FIN

Purging Tests

Argon `piston' well modeled

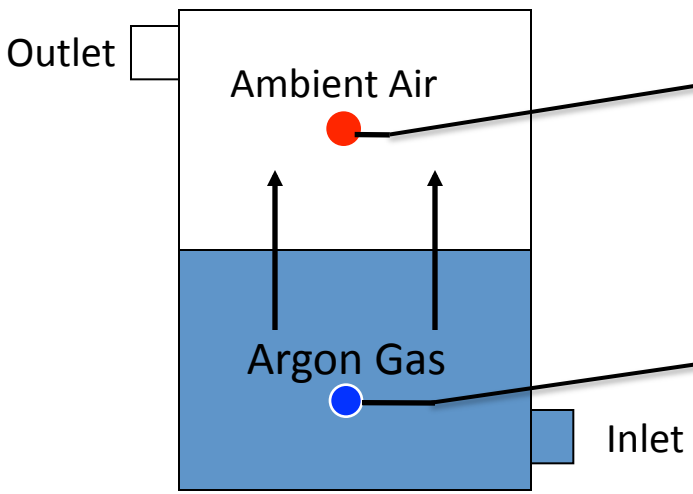

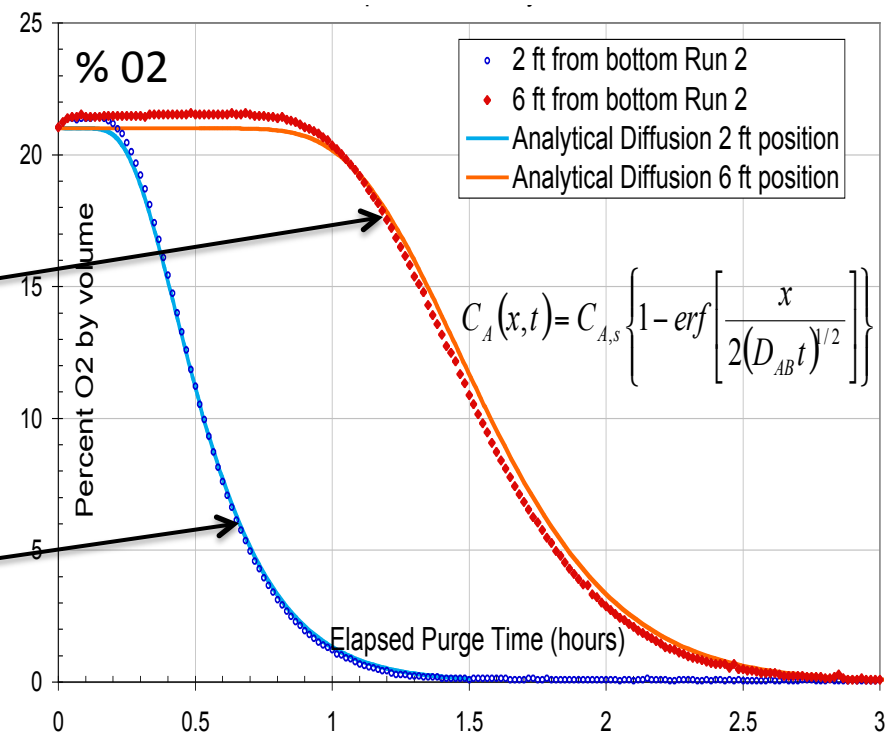

O2 Monitors

Purge limit test of industrial tank

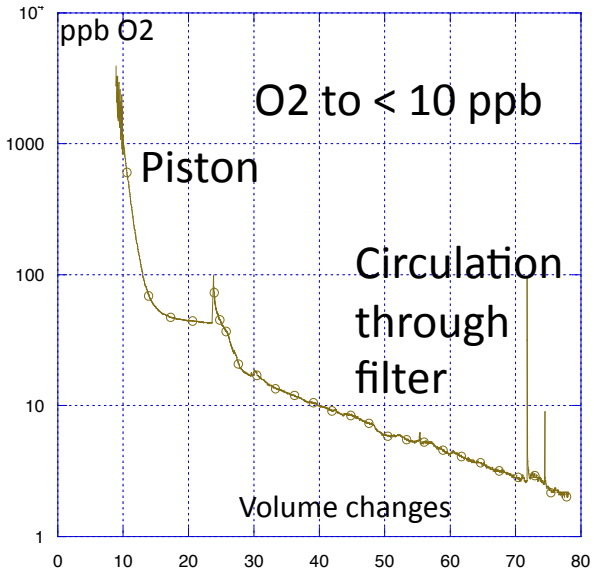

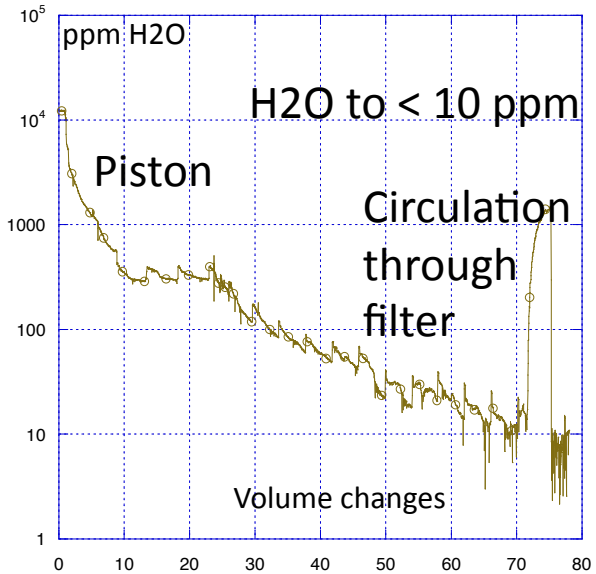

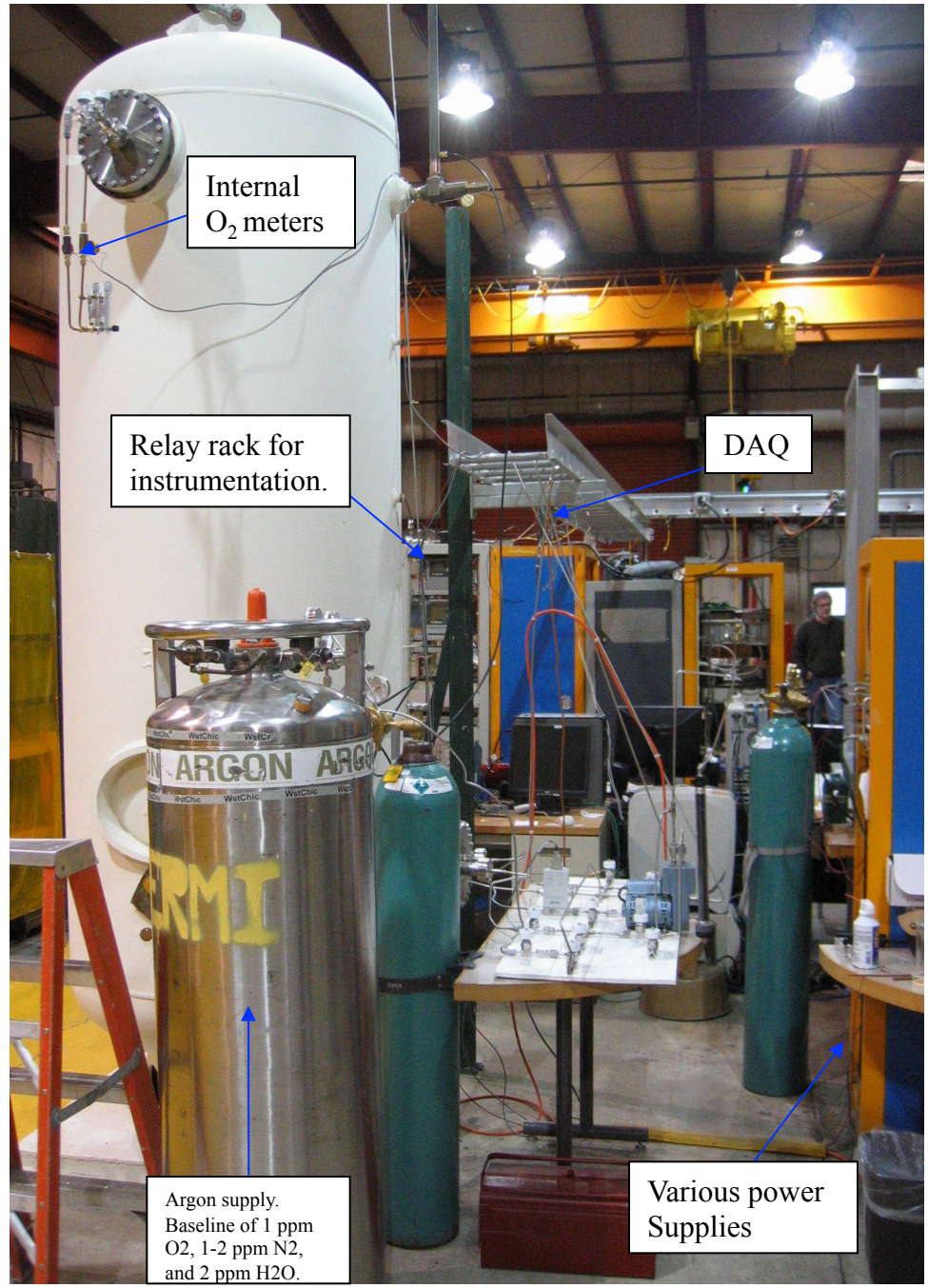

The effect of H20

First Operation of the Condenser on the MTS Cryostat

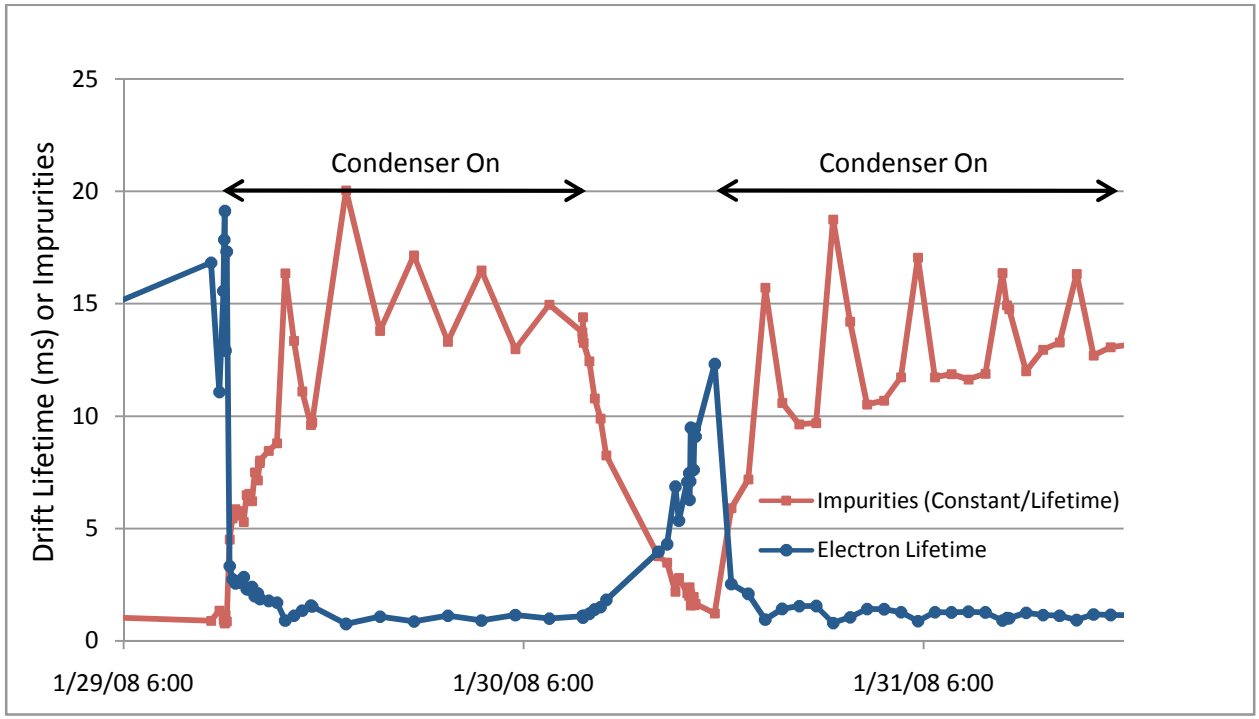

A disaster – electron drift lifetime destroyed in 30 minutes

The effect of H20

Hypotheses for Condenser Problem:

Condenser Introduced contamination

Electrostatics - charge build up on drops of LAr

Neither – full story in
NIM, A 608 (2009), pp. 251-258

Remedy (found before understanding)

Return condensed Argon through fine metal filter (originally installed to discharge `ions').

Ion-rod disproved ion theory.

When filter clogged and lifetime deteriorated, we suspected icing, and found ppb sensitive water monitor.

Condenser is efficient at injecting any contaminant in ullage back into the liquid.

Now run with return pipe of sintered metal filled with Molecular Sieve.

Original Condenser Installation

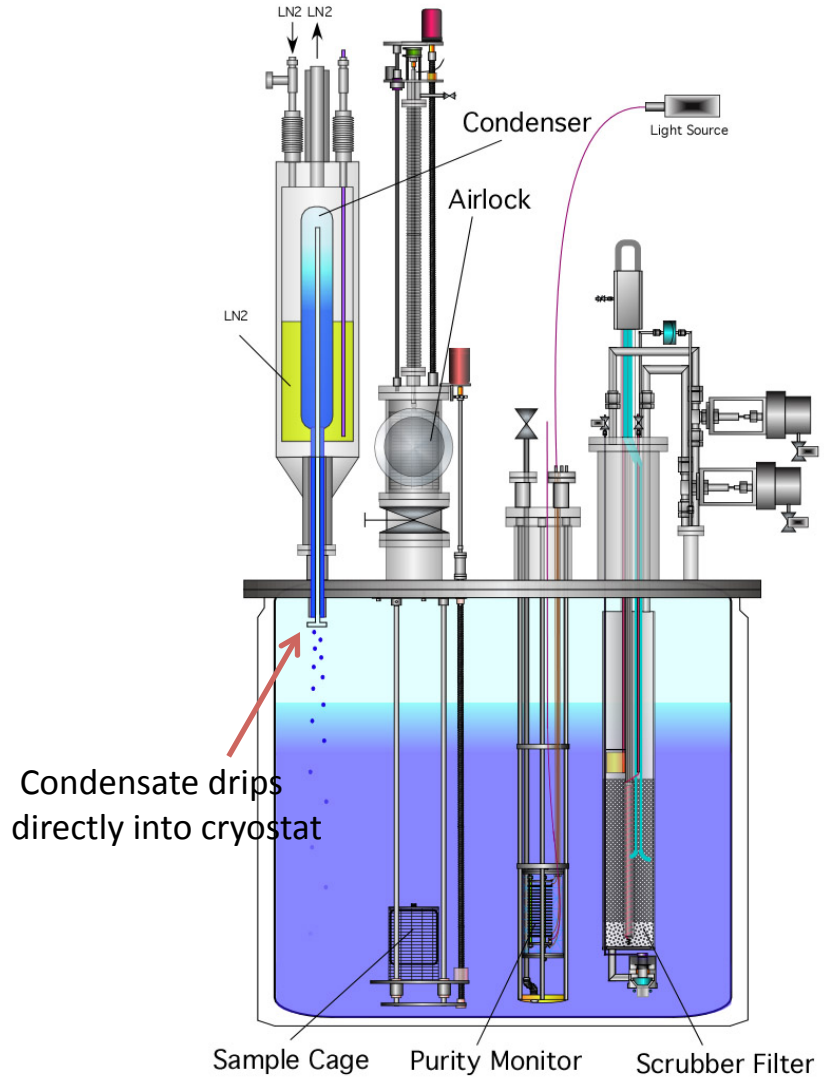

For testing passive filters

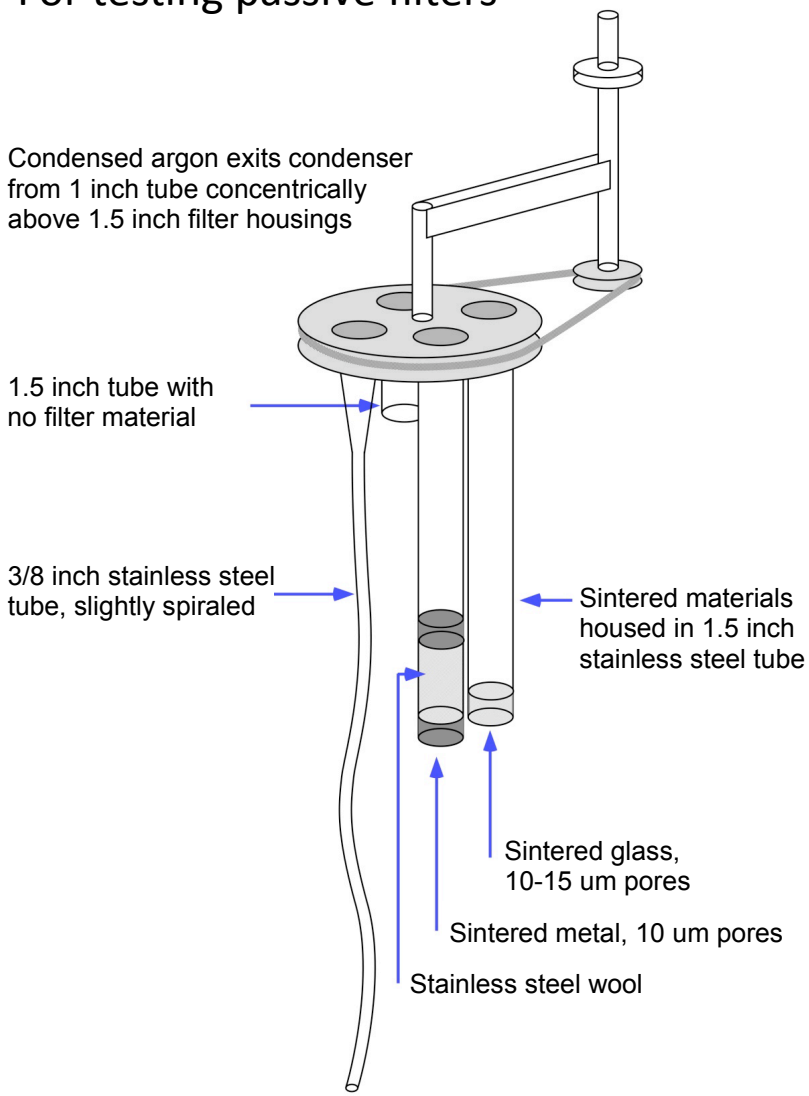

Schematic of condenser inlet and return

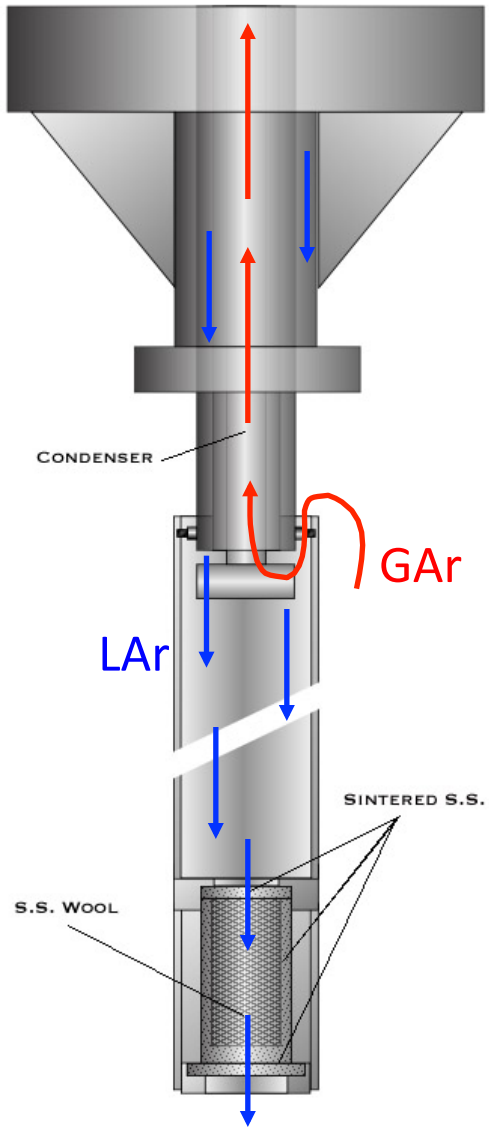

Some Materials Tested

Material	Sample Surface Area (cm^2)	Effect of Material on Electron Drift Lifetime (LT)			Comments
		94 K liquid	≈120 K vapor	≈225 K Vapor	
Red-X Corona Dope[a]	100	None	None	LT Reduced from 8 to 1 ms; recovery observed.	H_2O concentration not monitored.
Deactivated Rosin Flux[b]	200	None	Not Tested	LT reduced from 8 to 1.5 ms recovery observed	H_2O concentration not monitored.
FR4	1000	None	Not Tested	LT reduced from 8 to <1 ms	Outgassed enough H_2O at 225 K to saturate sintered metal return.
Taconic[c]	600	None	Not Tested	LT reduced.	Sample outgases water at 225 K.
Hitachi BE 67G[d]	300	None	Not Tested	LT reduced; recovery observed	Sample outgases water at 225K; outgassing reduced over time.
TacPreg[e]	200	None	None	LT reduced; recovery observed	Sample outgases water at 225 K; outgassing reduced over time.
FR4, y-plane wire endpoint for uBooNE	225	None	None	LT reduced from 8 to 3 ms	Sample outgases water at 225 K.
FR4, y-plane wire endpoint for uBooNE	225	None	None	None	Sample was evacuated in airlock prior to testing
FR4, y-plane wire cover for uBooNE	225	None	None	None	Sample was evacuated in airlock prior to testing
Devcon 5-min epoxy	100	None	None	LT reduced from 10 to 6 ms; some recovery observed	Sample outgases water at 225 K.

[a]GC Electronics, Part # 10-5002

[b]Kester Soldering Flux, Formula #1587, heated to approximately 450 F for 1 minute.

[c]Taconic #TPG-30-0045-35, Grade TPG-30, Lot #CBD7002 107053001

[d]Fiberglass laminate of non-halogenated material.

[e]Taconic #TLG-30-0600-HH/HH, Lot #10707111B, copper cladding mechanically removed from one side.