OTS Pumps & Compressors

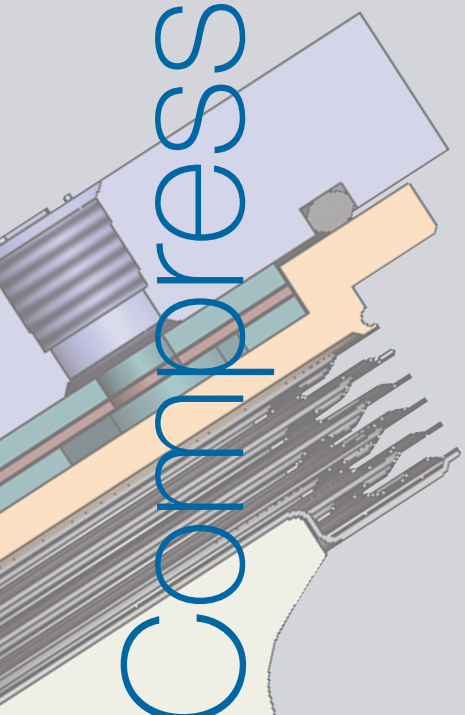

Metal Bellows Vacuum Pumps And Compressors
Off-The- Shelf Solutions to Your Toughest Pumping Applications

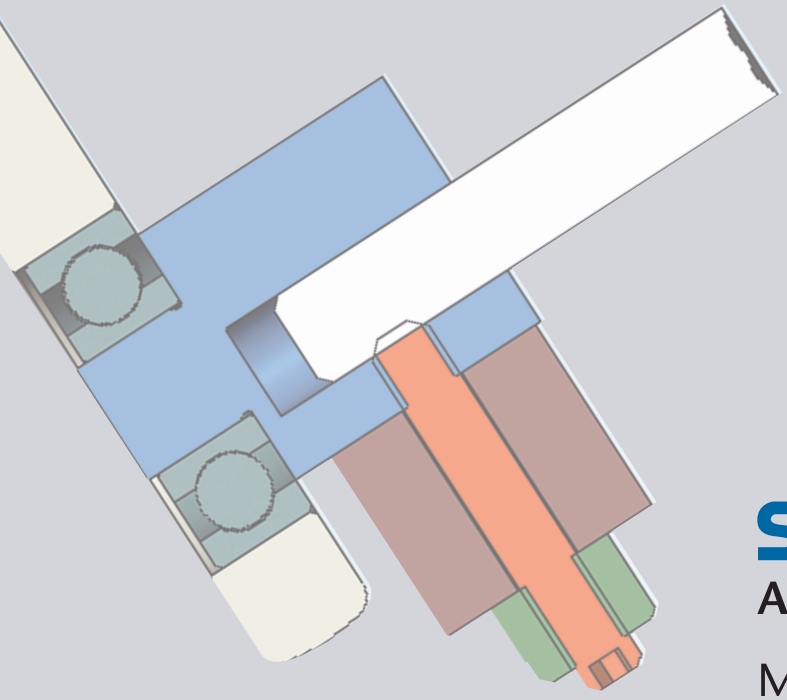

Senior Aerospace

Metal Bellows

Contents

Features, Descriptions and Applications	**1**
Vaccum Pumps and Compressors	**2-8**
MB-21 MB-41	2
MB-118 MB-158	3
MB-111 MB-151	4
MB-302	5
MB-601	6
MB-602	7
MODEL PWSC 28823-7	8
High Temperature Models	**9-12**
MB-21HT MB-41HT	9
MB-118HT MB158HT	10
MB-302HT	11
MB-601HT	12
Off The Shelf Parts	**13**
Double Containment Pumps and Compressors	**14**
High Pressure Models	**15**
Making the Correct Pump Selection	**16**

Features, Descriptions, Applications

Standard MET BEL® vacuum pumps and compressors are frequently modified to meet unique customer requirements. Customized applications may include all metal construction, ability to withstand extreme operating temperatures, or such special electrical characteristics as explosion proof motors, variable speed motors, DC motors and various voltage requirements. SAMB also offers double containment units for radioactive, toxic, and rare gas applications.

Whether they are off-the shelf or specially designed for a particular application, Met Bel pumps share these common features:

- **Long Life** – uniform, symmetrical welds that assure long life
- **Stainless Steel** – all wetted surfaces made from corrosion resistant 300 Series stainless steel except for the valve assembly gaskets which are either Teflon or Viton (all metal surfaces available on request)
- **No Maintenance** – no wearing surfaces and no lubrication required
- **Hermetically Sealed** – hermetically sealed welded bellows that provide positive containment. Every pump is pressure tested to assure leak-tight integrity, with certification to mass spectrometer leak testing available
- **Infinite Number of Cycles** – bellows and valves designed with stress levels below defined endurance limits of materials allowing for an infinite number of cycles
- **Sealed Ball Bearings** – motor and drive assembly containing permanently lubricated and sealed ball bearings
- **Positive Bellows Displacement** – eccentric between the bearings and the motor shaft that provides motion for positive bellows displacement

MET BEL Concept

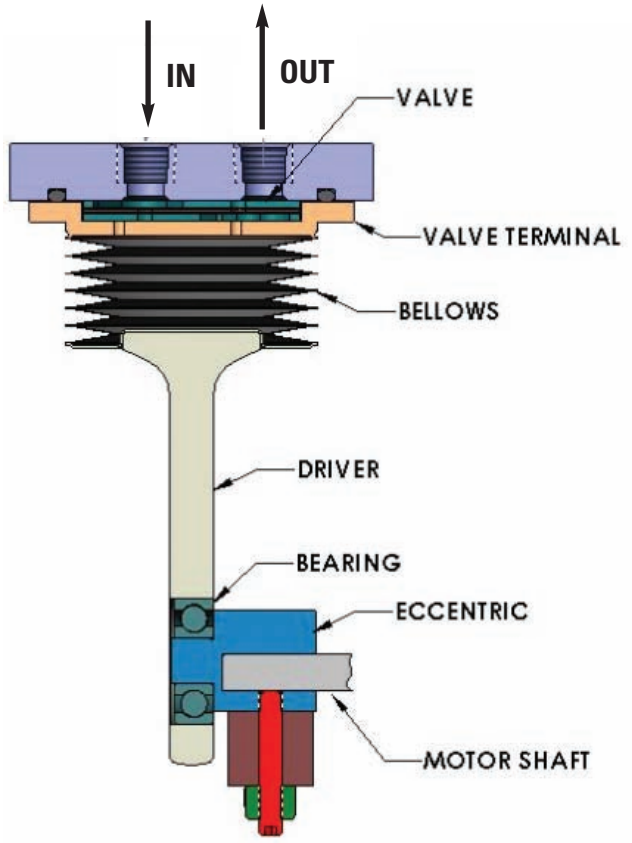

Applications

- Gas analysis, analytical instrumentation sampling
- Nuclear radiation monitoring
- High voltage electronics cooling and wave guide pressurization
- High temperature engine exhaust analysis
- Ambient air sampling
- Radioactive, toxic, costly gas processing
- Research and laboratory experiments providing contaminant free samples
- Commercial aircraft potable water pressurization system
- Semiconductor process gas handling

Note:

Performance curves in this catalog are based on:

- Atmospheric pressure at the inlet for pressure curves and
- Atmospheric pressure at the discharge for vacuum curves.

For other conditions see Page 16

Vacuum Pumps And Compressors

MB-21 MB-41

SPECIFICATIONS

General

Housing Body	Cast Aluminum
Bellows	AM-350 Stainless Steel
All other wetted surfaces	300 Series Stainless Steel except for Valve Assembly Teflon Valve Gaskets and Viton O-Rings
Bearings	Permanently Lubricated Ball Type
Weight	6 lbs.
Port Connections	1/8 N.P.T.

Electrical

Standard	115V 50/60 Hz.
Current at 115V/60hz	2.3 Amps (max)
Motor Specification	1/40 H.P. Shaded Pole Induction Motor with Ball Bearings and Thermal Overload Protection
Operating Speed @ 60 Hz.	3000 R.P.M.
Insulation	Class B

Optional Features: 240V 50 Hz., D.C. Motors, Viton Valve Gaskets, VCR Fittings

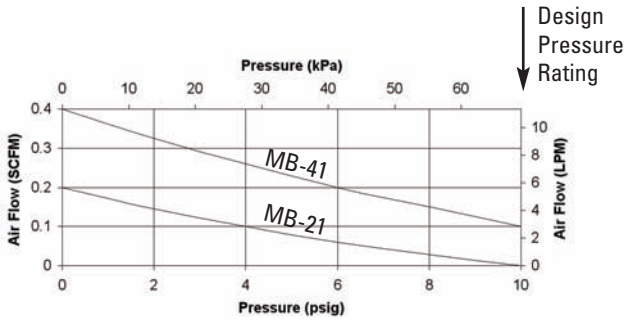

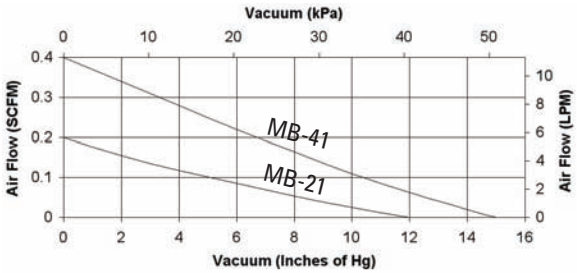

Flows depicted are at 60Hz. Flows at 50 Hz are 5/6 of 60 Hz flows.

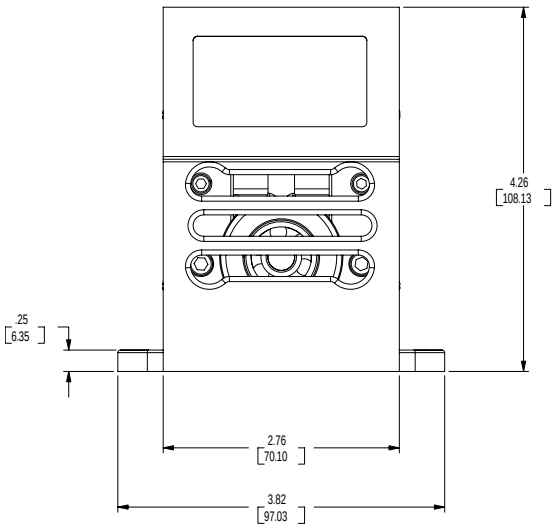

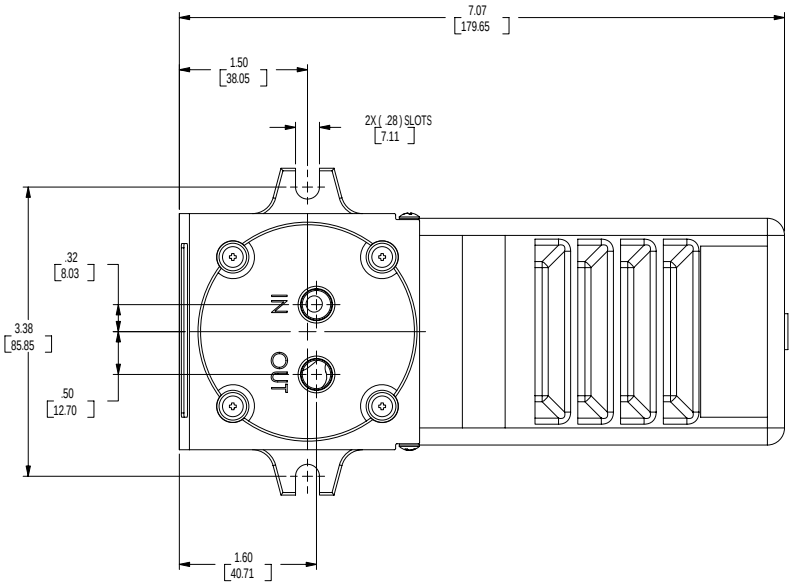

MB-118 MB-158

SPECIFICATIONS

General

Housing Body	Cast Aluminum
Bellows	AM-350 Stainless Steel
All other wetted surfaces	300 Series Stainless Steel except for Valve Assembly Viton Valve Gaskets
Bearings	Permanently Lubricated Ball Type
Weight	14 lbs.
Port Connections	1/4 N.P.T.

Electrical

Standard	115V 50/60 Hz.
Current at 115V/60Hz	1.4 Amps (max)
Motor Specification	1/10 H.P.
Operating Speed @ 60 Hz.	1725 R.P.M.
Insulation	Class B

Optional Features: 230V 50 Hz., D.C. Motors, Teflon Valve Gaskets, Aluminum O-Ring Seals, VCR Fittings

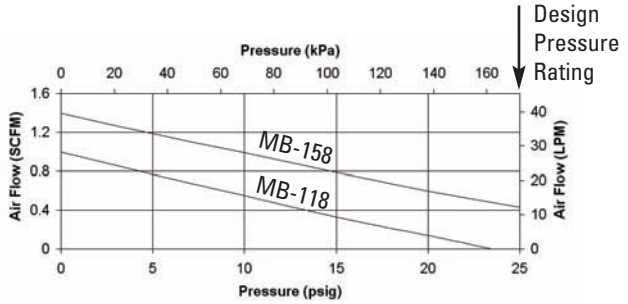

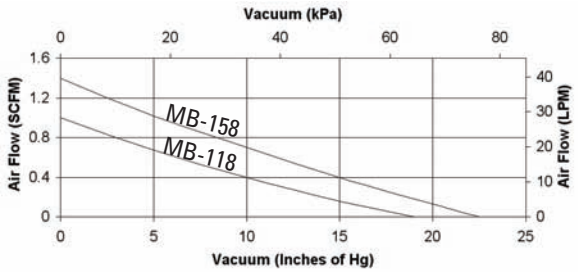

Flows depicted are at 60Hz. Flows at 50 Hz are 5/6 of 60 Hz flows.

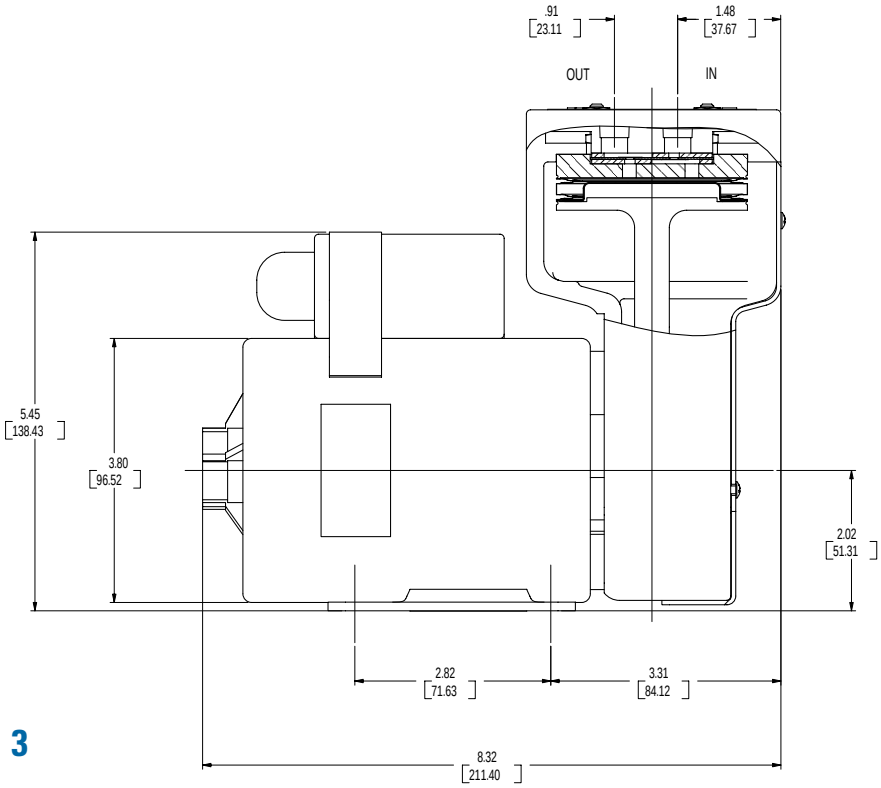

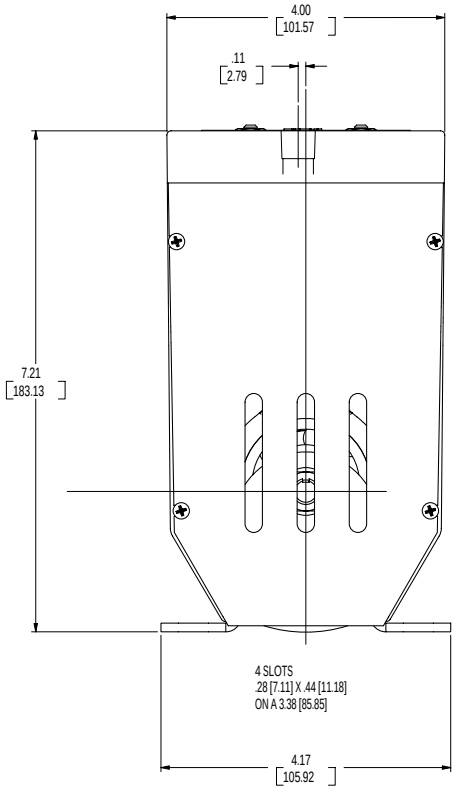

MB-111 MB-151

SPECIFICATIONS

General

Housing Body	Cast Aluminum
Bellows	AM-350 Stainless Steel
All other wetted surfaces	300 Series Stainless Steel except for Valve Assembly Teflon Valve Gaskets and Viton O-Rings
Bearings	Permanently Lubricated Ball Type
Weight	24 lbs.
Port Connections	1/4 N.P.T.

Electrical

Standard	115/230V 50/60 Hz.
Current at 115V/60Hz	5.4 Amps (max)
Motor Specification	1/4 H.P. Single Phase ODP - Open Drip Proof Motor
Operating Speed @ 60 Hz.	1725 R.P.M.
Insulation	Class B

Optional Features: Explosion Proof Motor, Totally Enclosed Fan Cooled (TEFC) Motor, Variable Speed Motor, Viton Valve Gaskets, Aluminum O-Ring Seals, VCR Fittings, High Pressure Models (See Page 15)

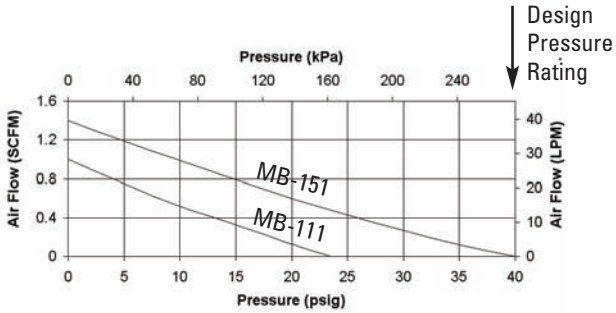

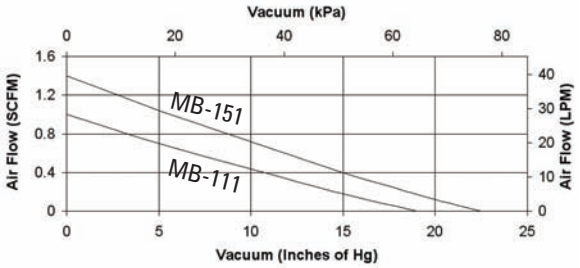

Flows depicted are at 60Hz. Flows at 50 Hz are 5/6 of 60 Hz flows.

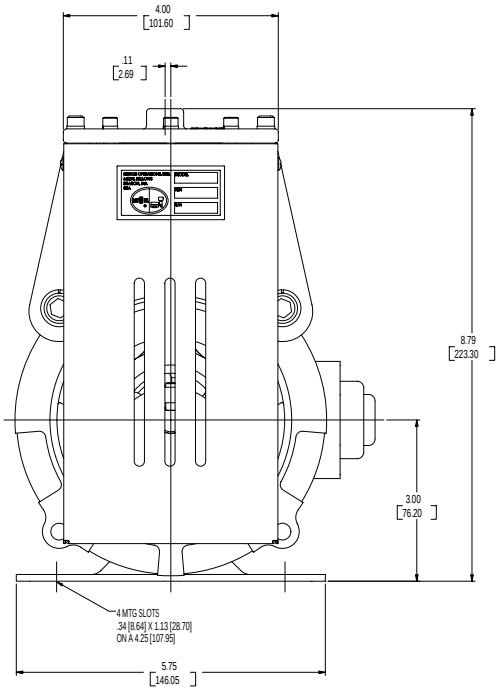

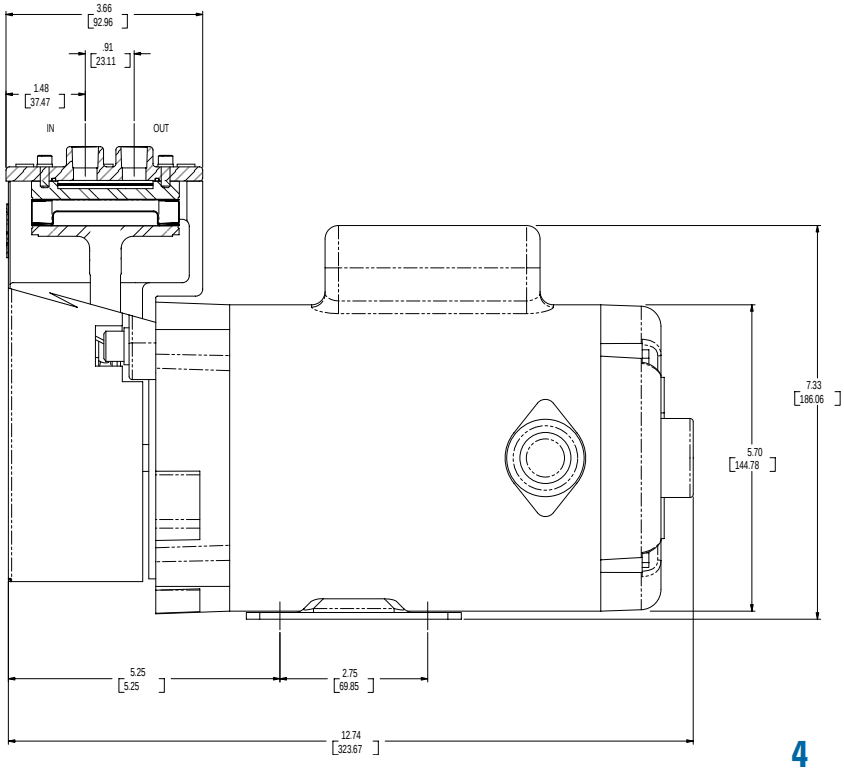

MB-302

SPECIFICATIONS

General

Housing Body	Cast Aluminum
Bellows	AM-350 Stainless Steel
All other wetted surfaces	300 Series Stainless Steel except for Valve Assembly Teflon Valve Gaskets and Viton O-Rings
Bearings	Permanently Lubricated Ball Type
Weight	26 lbs.
Port Connections	3/8 N.P.T.

Electrical

Standard	115/230V 50/60 Hz.
Current at 115V/60Hz	6.6 Amps (max)
Motor Specification	1/2 H.P. Single Phase ODP - Open Drip Proof Motor
Operating Speed @ 60 Hz.	3450 R.P.M.
Insulation	Class B

Optional Features: Explosion Proof Motor, Polyphase Motor, Totally Enclosed Fan Cooled (TEFC) Motor, Viton Valve Gaskets, VCR Fittings

Design Pressure Rating

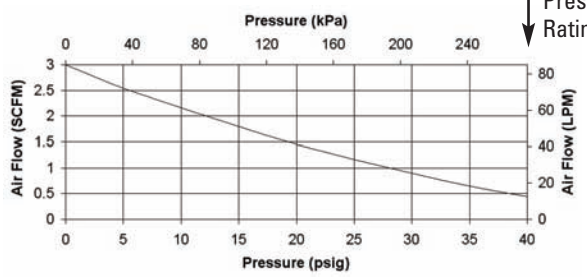

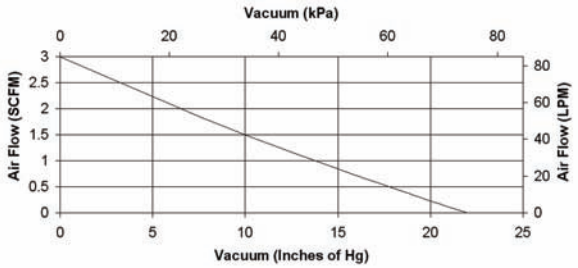

Flows depicted are at 60Hz. Flows at 50 Hz are 5/6 of 60 Hz flows.

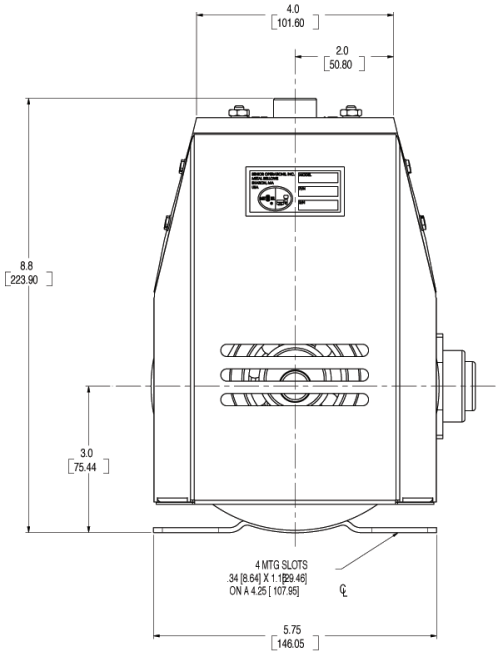

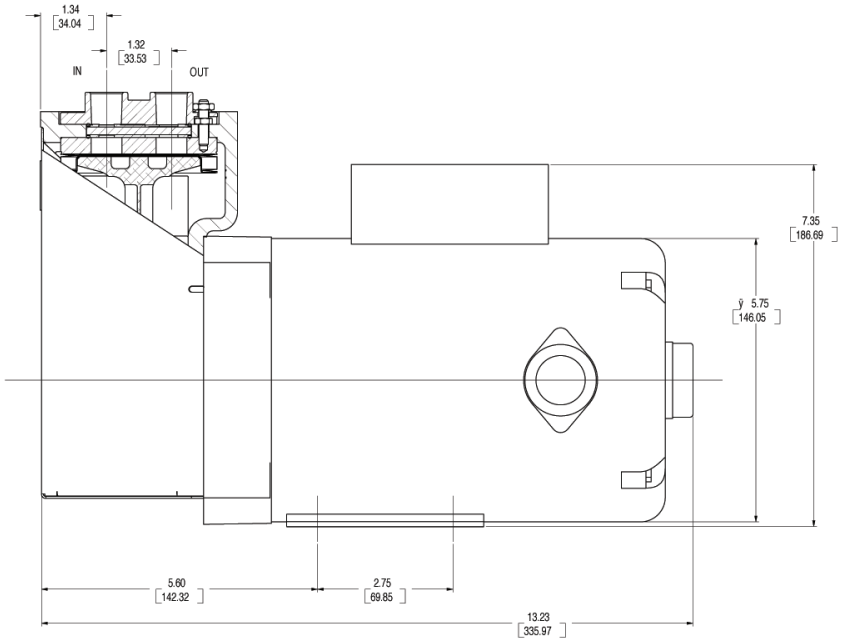

MB-601

SPECIFICATIONS

General

Housing Body	Cast Aluminum
Bellows	AM-350 Stainless Steel
All other wetted surfaces	300 Series Stainless Steel except for Valve Assembly Teflon Valve Gaskets and Viton O-Rings
Bearings	Permanently Lubricated Ball Type
Weight	48 lbs.
Port Connections	3/8 N.P.T.

Electrical

Standard	115/230V 50/60 Hz.
Current at 115V/60 Hz	6.6 Amps (max)
Motor Specification	3/4 H.P. Single Phase ODP - Open Drip Proof Motor
Operating Speed @ 60 Hz.	1725 R.P.M.
Insulation	Class B

Optional Features: Explosion Proof Motor, Polyphase Motor, Totally Enclosed Fan Cooled (TEFC) Motor, Variable Speed Motor, VCR Fittings, Viton Valve Gaskets, Aluminum O-Ring Seals, High Pressure Models (See Page 15)

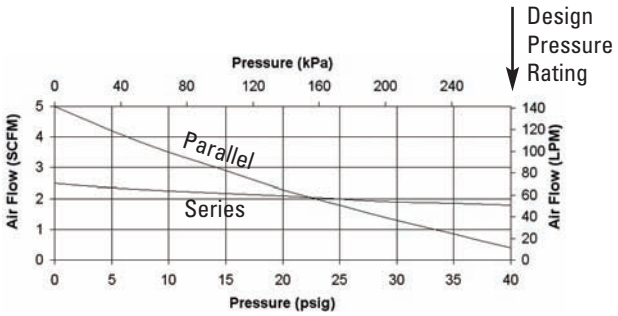

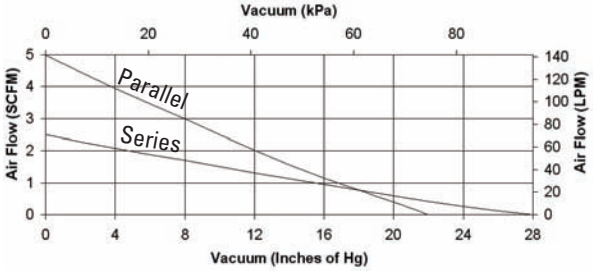

Flows depicted are at 60Hz. Flows at 50 Hz are 5/6 of 60 Hz flows.

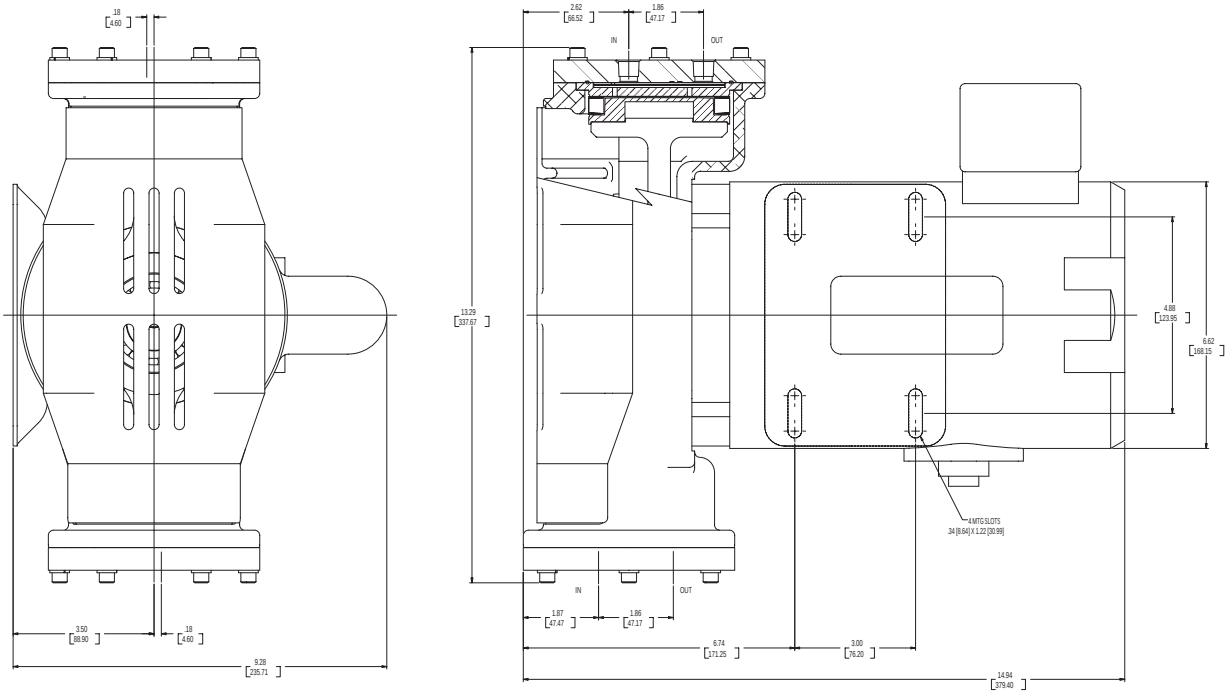

MB-602

SPECIFICATIONS

General

Housing Body	Cast Aluminum
Bellows	AM-350 Stainless Steel
All other wetted surfaces	300 Series Stainless Steel except for Valve Assembly Teflon Valve Gaskets and Viton O-Rings
Bearings	Permanently Lubricated Ball Type
Weight	30 lbs
Port Connections	3/8 N.P.T.

Electrical

Standard	115/230V 50/60 Hz.
Current at 115V/60 Hz	6.6 Amps (max)
Motor Specification	1/2 H.P. Single Phase ODP - Open Drip Proof Motor
Operating Speed @ 60 Hz.	3450 R.P.M.
Insulation	Class B

Optional Features: Explosion Proof Motor, Polyphase Motor, Totally Enclosed Fan Cooled (TEFC) Motor, VCR Fittings, Viton Valve Gaskets

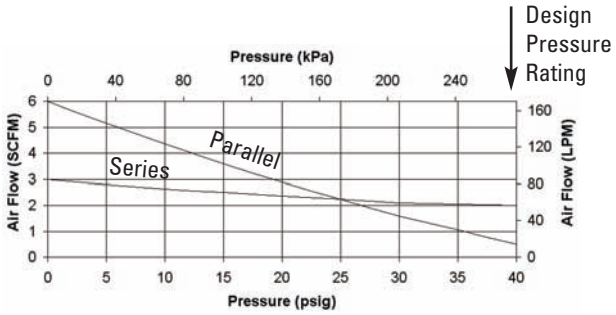

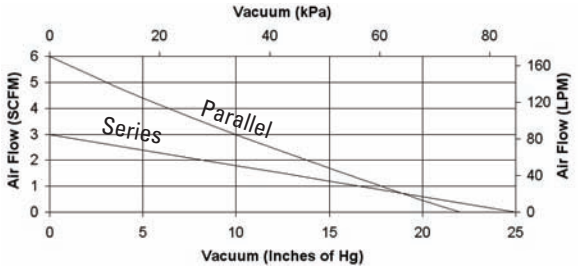

Flows depicted are at 60Hz. Flows at 50 Hz are 5/6 of 60 Hz flows.

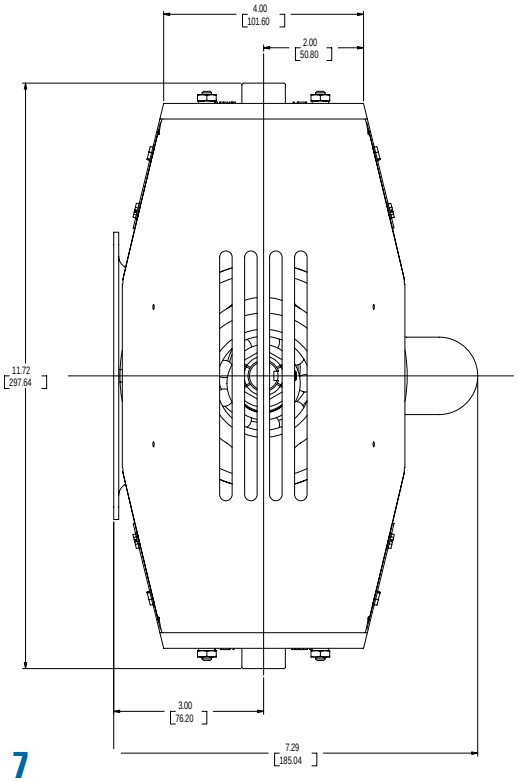

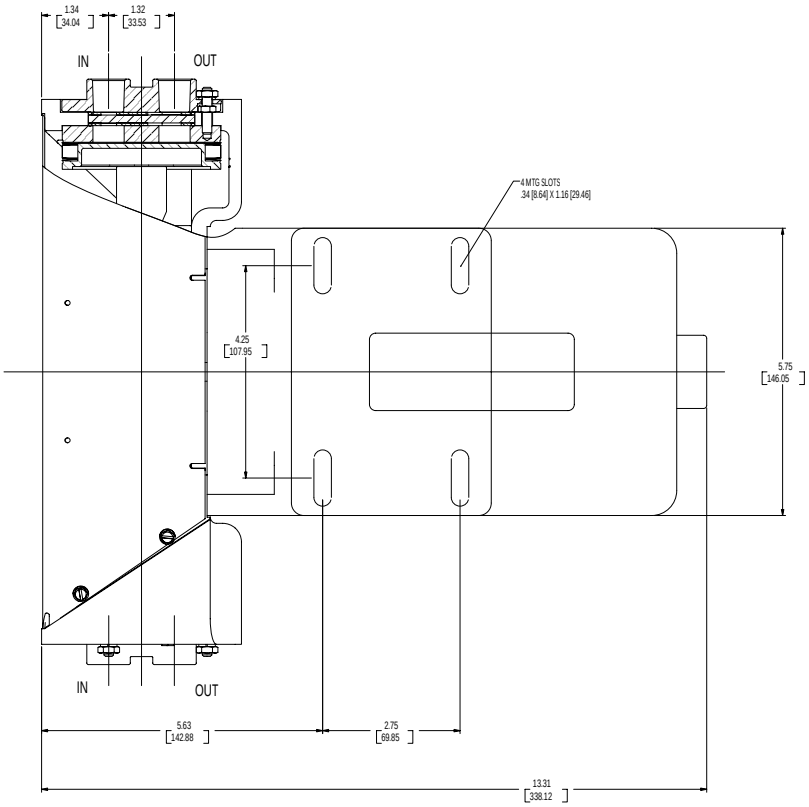

MODEL PWSC 28823-7

SPECIFICATIONS

General

Bellows	AM-350 Stainless Steel
All other wetted surfaces	300 Series Stainless Steel except for Valve Assembly Teflon Valve Gaskets, Silicone O-rings
Pump Housing, Cap, and Connecting Rods	Cast Aluminum
Bearings	Permanently Lubricated Ball Type
Port Connections	MS33649 with Series Connected Manifold
Overhaul & Maintenance Manual	Available to ATA 100 Specifications
Weight	12.0 lbs.

Electrical

Power	115/200 V 400 Hz., 3 Phase, 600 Watts maximum power Consumption
Motor Specification	Designed in conformance with MIL-M-7969 and is self cooling with direct acting automatic reset thermal protector
Operating Speed @400 Hz.	3600 R.P.M.

Optional Features: Custom Electrical Connectors, Custom Manifolds

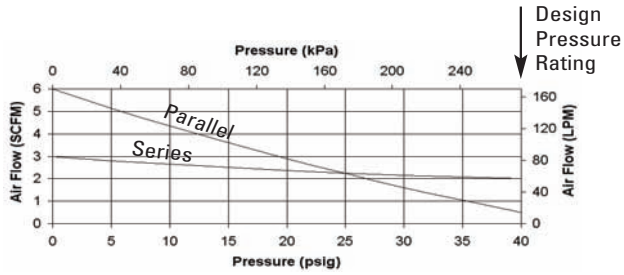

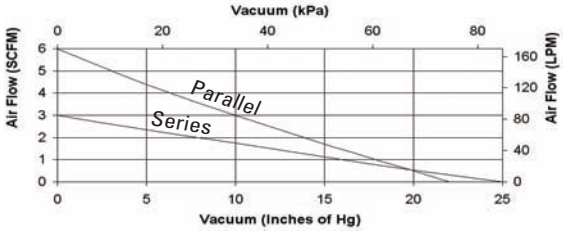

Flows depicted are at 60Hz. Flows at 50 Hz are 5/6 of 60 Hz flows.

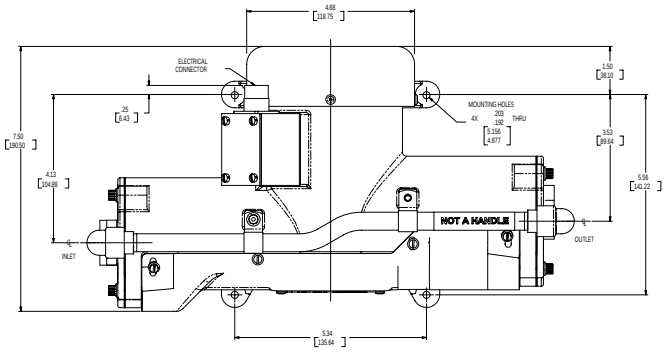

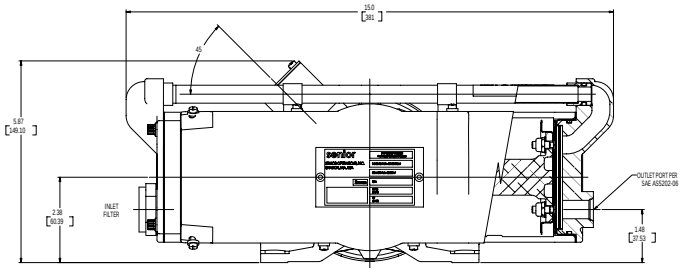

DUPLEX PUMPS OPERATED IN SERIES/PARALLEL

Shown below is the correct plumbing procedure

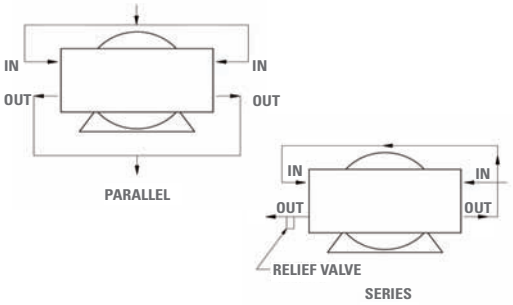

DUPLEX PUMPS OPERATED IN SERIES/PARALLEL PLUMBING A MET BEL® DUPLEX VACUUM PUMP COMPRESSOR IN SERIES

Any MET BEL® Duplex Vacuum Pump/Compressor can be connected in series and operated as a two-stage pump. This results in a lower absolute inlet pressure when operated as a vacuum pump and a higher flow at maximum rated pressure when operated as a compressor (see flow curves). To do this, connect the outlet port of the first stage to the inlet port of the second stage with a manifold. For compressor operation, connect service line to the outlet port of the second stage. For vacuum operation, connect the service line to the inlet port of the first stage.

Caution: Never operate with the outlet port of the second stage fully closed. This will cause extremely high pressure build up in the second stage that can damage the pump. It is recommended that a relief valve set at 40 PSIG be used in the outlet line to prevent this over pressurization.

High Temperature Models

MB-21HT MB-41HT

SPECIFICATIONS

General

Housing Body	Nickel Plated Cast Iron
Bellows	AM-350 Stainless Steel
All other wetted surfaces	300 Series Stainless Steel except for Valve Assembly Teflon Valve Gaskets
Bearings	Permanently Lubricated and Shielded, Heat Stabilized Ball Type
Weight	10 1/2 lbs.
Ambient Temp	450°F Max for Pump Head/105°F Max for Motor
Port Connections	1/8 N.P.T.

Electrical

Standard	115/230V 50/60 Hz.
Current at 115V/60 Hz	2.0 Amps (max)
Motor Specification	1/15 H.P.
Operating Speed @ 60 Hz.	3000 R.P.M.
Insulation	Class B

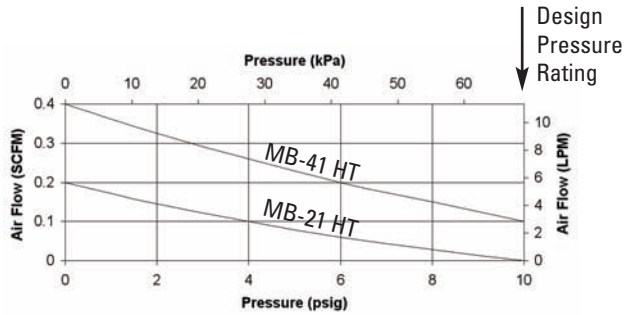

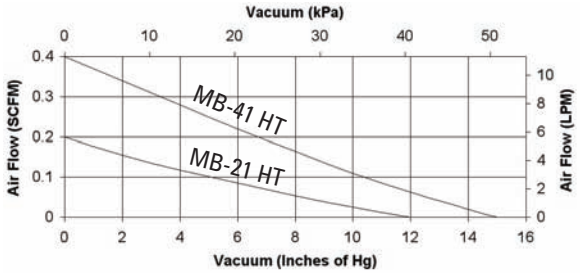

Flows depicted are at 60Hz. Flows at 50 Hz are 5/6 of 60 Hz flows.

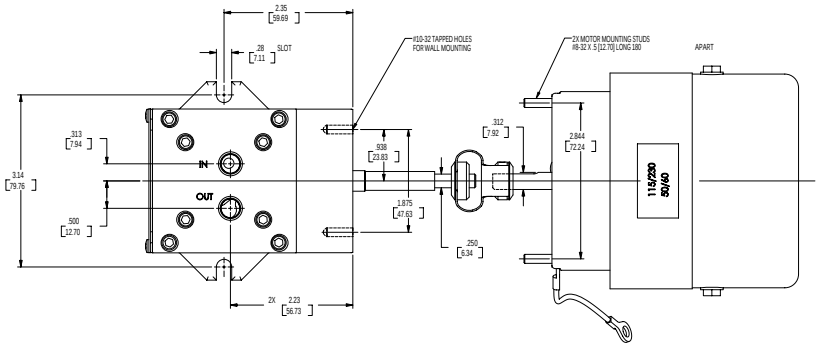

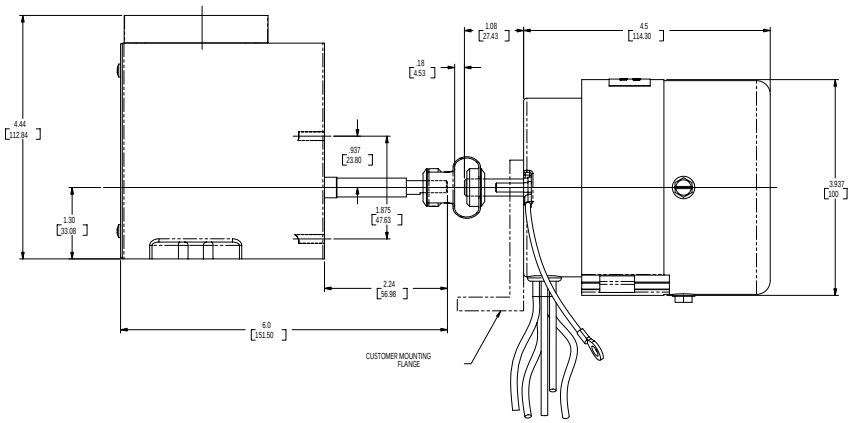

MB-118HT MB158HT

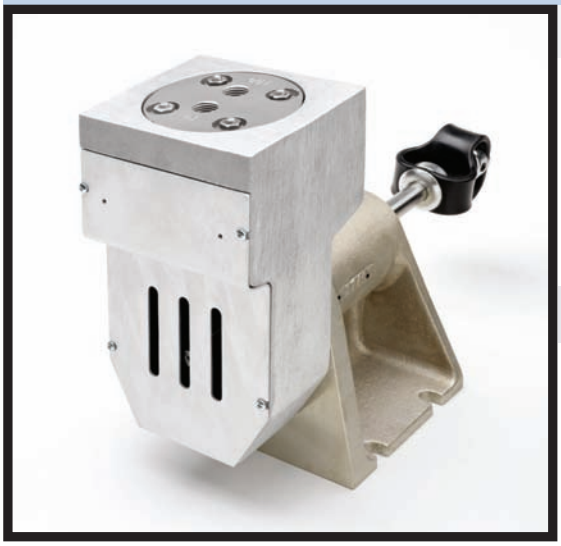

SPECIFICATIONS

General

Housing Body	Nickel Plated Cast Iron and Aluminum
Bellows	AM-350 Stainless Steel
All other wetted surfaces	300 Series Stainless Steel except for Valve Assembly, Teflon Valve Gaskets
Bearings	Permanently Lubricated and Shielded, Heat Stabilized Ball Type
Weight	26 lbs.
Ambient Temp	450°F Max for Pump Head/105°F Max for Motor
Port Connections	1/4 N.P.T.

Electrical

Standard	115/230V 50/60 Hz.
Current at 115V/60 Hz	5.4 Amps (max)
Motor Specification	1/4 H.P. Single Phase ODP - Open Drip Proof Motor
Operating Speed @ 60 Hz.	1725 R.P.M.
Insulation	Class B

Optional Features: Explosion Proof Motor, Totally Enclosed Fan Cooled (TEFC) Motor, Shaft Lengths to 8"

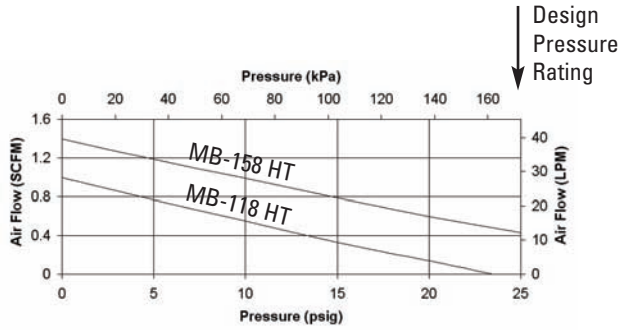

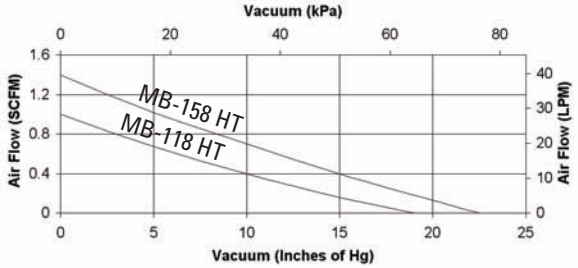

Flows depicted are at 60Hz. Flows at 50 Hz are 5/6 of 60 Hz flows.

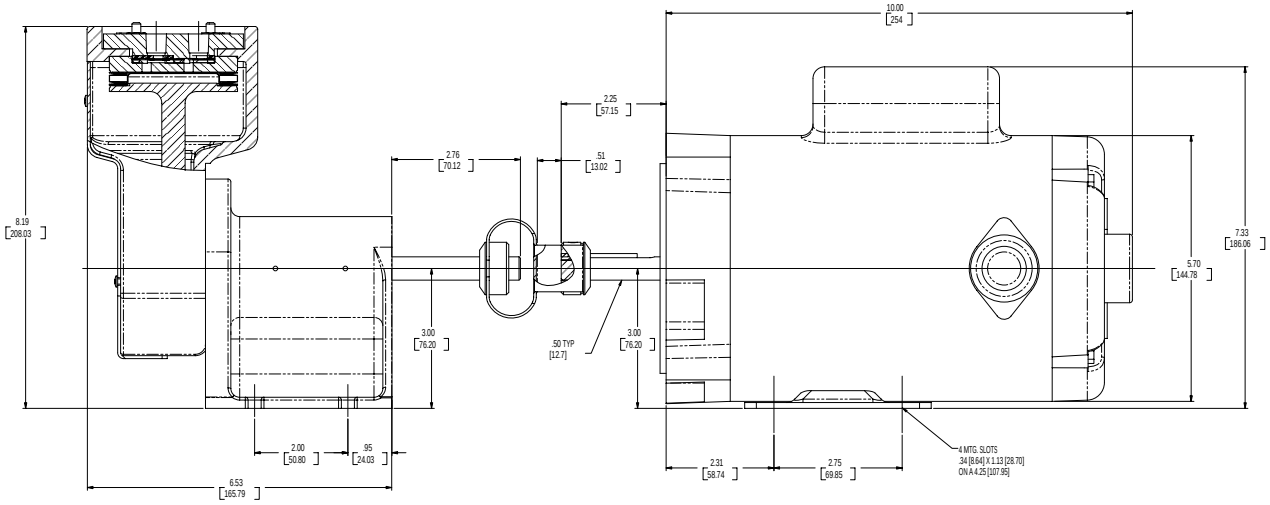

MB-302HT

SPECIFICATIONS

General

Housing Body	Nickel Plated Cast Iron and Aluminum
Bellows	AM-350 Stainless Steel
All other wetted surfaces	300 Series Stainless Steel except for Valve Assembly Teflon Valve Gaskets and Viton O-Rings
Bearings	Permanently Lubricated and Shielded, Heat Stabilized Ball Type
Weight	37 lbs.
Ambient Temp	450ºF Max for Pump Head/105ºF Max for Motor
Port Connections	3/8 N.P.T.

Electrical

Standard	115/230V 50/60 Hz.
Current at 115V/60 Hz	7.4 Amps (max)
Motor Specification	1/2 H.P. Single Phase ODP - Open Drip Proof Motor
Operating Speed @ 60 Hz.	1725 R.P.M.
Insulation	Class B

Optional Features: Explosion Proof Motor, Polyphase Motor, Totally Enclosed Fan Cooled (TEFC) Motor

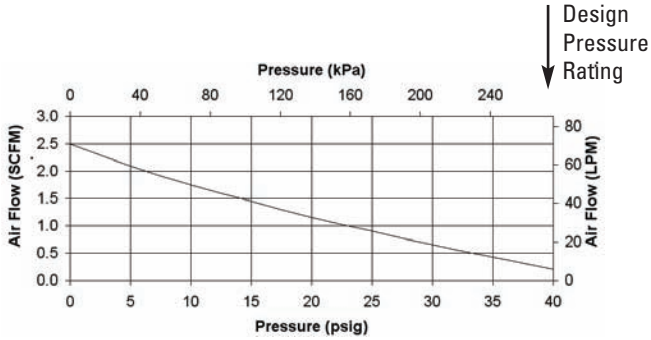

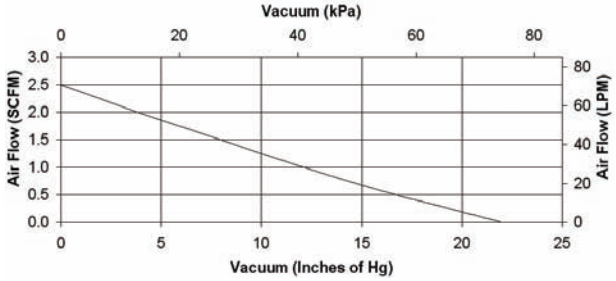

Flows depicted are at 60Hz. Flows at 50 Hz are 5/6 of 60 Hz flows.

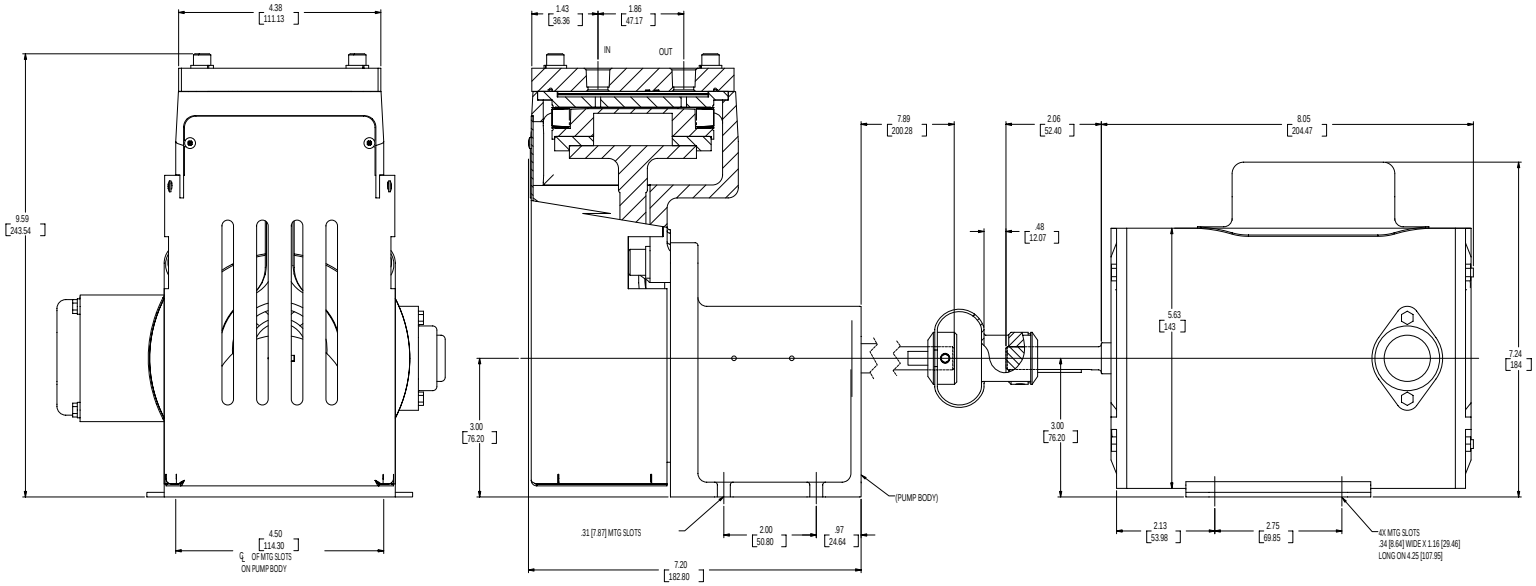

MB-601HT

SPECIFICATIONS

General

Housing Body	Nickel Plated Cast Iron and Aluminum
Bellows	AM-350 Stainless Steel
All other wetted surfaces	300 Series Stainless Steel except for Valve Assembly Teflon Valve Gaskets, Viton O-Rings
Bearings	Permanently Lubricated and Shielded, Heat Stabilized Ball Type
Weight	61 lbs.
Ambient Temp	450°F Max for Pump Head/105°F Max for Motor
Port Connections	3/8 N.P.T.

Electrical

Standard	115/230V 50/60 Hz.
Current at 115V/60 Hz	6.6 Amps (max)
Motor Specification	3/4 H.P. Single Phase ODP - Open Drip Proof
Operating Speed @ 60 Hz.	1725 R.P.M.
Insulation	Class B

Optional Features: Explosion Proof Motor, Polyphase Motor, Totally Enclosed Fan Cooled (TEFC) Motor

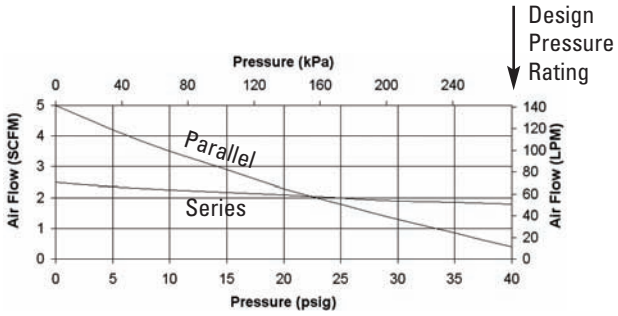

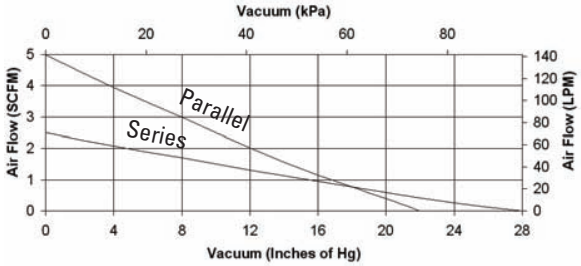

Flows depicted are at 60Hz. Flows at 50 Hz are 5/6 of 60 Hz flows.

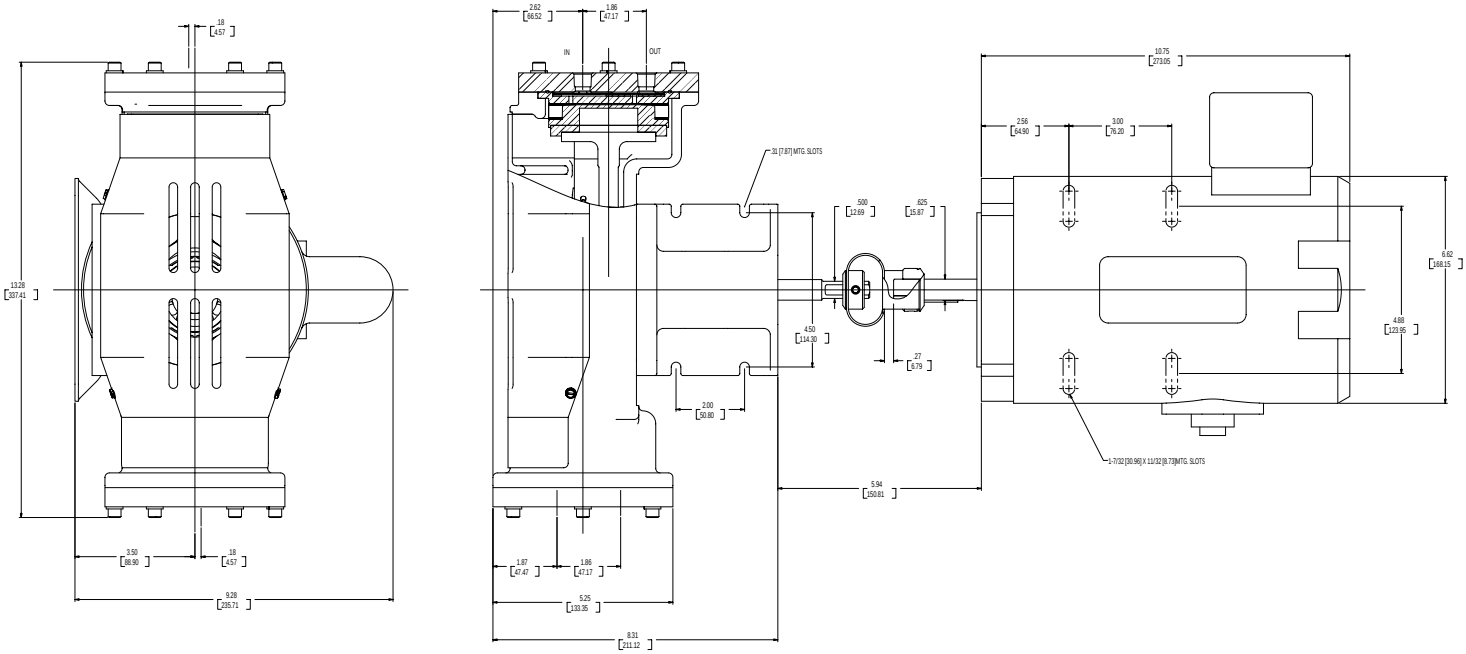

Off-The-Shelf Parts

STANDARD MODELS
ADAPTATIONS of STANDARDS
CUSTOM DESIGNS

Whatever your application requires, SAMB stands ready to help you find a solution. Our Sales and Engineering Personnel will help you select a standard pump, resolve a modification to a standard or define a custom design to meet your needs. Custom designs are available for system pressures below 50 torr and high pressure models to 100 psi.

CALL METAL BELLOWS FOR ASSISTANCE

Sales personnel will assist you in resolving your needs. If your application requires a special system, we will put you directly in touch with the proper technical specialist.

MET BEL® pump replacement parts are also available. For further information call (781)784-1400.

Pumps will pass a reasonable amount of condensation but will be damaged by significant amounts of liquid.

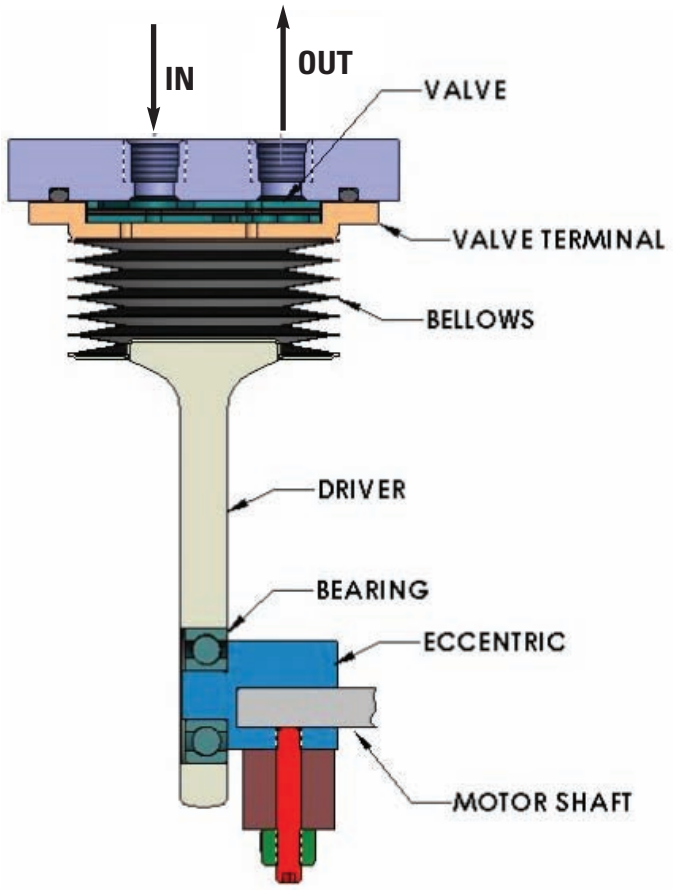

Motor Assemblies
- due to the number of models, call (781) 784.1400 for the latest replacement motor model for your pump type.

*** Bellows Unit - Bellows, eccentric, bearing,driver terminal and valve terminal**

**** Bellows Unit - Bellows, valve terminal and drive terminal**

MET BEL® SPECIFICATIONS

	MODEL	BELLOWS UNITS	REPLACEMENT DRIVER	VALVE ASSEMBLY	QUANTITY PER PUMP
SINGLE	MB-21 MB-21HT	28686* 27514*		26328 28905	1 1
	MB-41 MB-41HT	29007* 27008*		26328 28905	1 1
	MB-111	26865*		25871	1
	MB-118 MB-118 HT	28347* 29192*		27995 29568	1 1
	MB-151	25427*		25871	1
	MB-158 MB-158 HT	28334* 29190*		27995 29568	1 1
	MB-302 (prior to S/N 1600) (S/N 1600 and above) MB-302 HT	29217** 45402** 29670-1**	29582 45403 Factory Only	31722 31722 27456	1 1 1
DUPLEX	MB-601 MB-601 HT	29670-1** 29670-1**	Factory Only Factory Only	27456 27456	2 2
	MB-602	29217**	29582	31722	2

DOUBLE CONTAINMENT PUMPS & COMPRESSORS

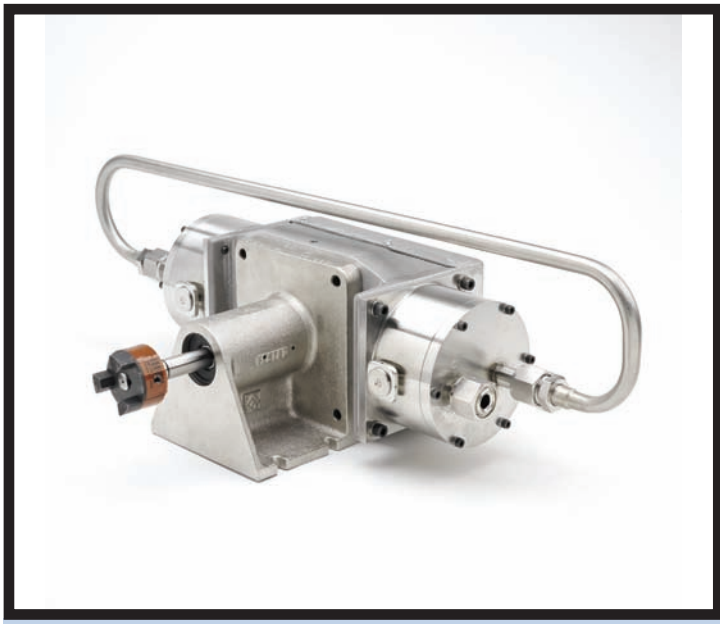

Specifications

General

Pressure Shell	300 Series Stainless Steel
All other wetted surfaces	300 Series Stainless Steel with either Aluminum O-Rings, Teflon Valve Gaskets, or Viton Valve Gaskets
Bellows	AM-350 S.S. (347 S.S Optional)
Bearings	Permanently Lubricated Ball Type
Port Connections	300 series Stainless Steel Tubing (Length Optional up to 18") or VCR Weld Glands

Electrical

Motor Specification	As Required by Application
Power Rating	1/4 H.P. to 1 1/2 H.P.
Operating Speed @ 60 Hz.	1725 R.P.M.
Insulation	As Required by Application

Performance

Vacuum	28 inches Hg (maximum, duplex, low pressure)
Pressure	85 PSIG (maximum, MB-601, high pressure)
Flow	5 SCFM Free Flow (maximum, MB-601)

Optional Features

- Explosion Proof Motor
- Special Electrical Insulation (Radiation Resistant) and Voltages
- Leak Detector Port Location Optional
- Pedestal Mount

Features and Benefits

Met Bel Double Containment Pumps and Compressors solve unique containment problems where radioactive gases are involved or where loss of gas could be hazardous or costly. Using secondary bellows as leak-tight seals, they are used primarily in nuclear industrial applications to control, contain, and distribute the flow of such gases as xenon, krypton, hydrogen, and tritium.

In addition to the conventional inlet-outlet construction of typical compressors, double containment pumps and compressors have third port connections to a vacuum leak detector that monitors the integrity of the pumping system. They are available in both single and duplex design, leak tight to less than $2x10^{-10}$ scc/sec He. Should the bellows rupture due to excessive pressure or contamination, the vacuum would be lost. This would cause a pressure switch or leak detector to be triggered, setting off an alarm and shutting down the system. The pumped gas does not escape.

HIGH PRESSURE MODELS

Specifications

General

Housing Body	Cast Aluminum
Bellows	AM-350 Stainless Steel
All other wetted surfaces	300 Series Stainless Steel with either Aluminum O-Rings, Teflon Valve Gaskets, or Viton Valve Gaskets
Bearings	Permanently Lubricated Ball Type
Port Connections	1/4 or 3/8 NPT

Electrical

Motor Specification	115/230V 50/60Hz
Power Rating	1/4 H.P. to 1 1/2 H.P.
Operating Speed @ 60 Hz.	1725 R.P.M.
Insulation	Class B

Performance

Discharge Pressure	100 PSIG (maximum, MB-601)
Flow	5 SCFM Free Flow (maximum, MB-601)

Optional Features

Various Motor Types and Voltages
Duplex Model – one or two high pressure stages
VCR Fittings

Features and Benefits

Designed to solve unique pressure problems where contaminant free samples must be processed with leak-tight integrity, these compressors operate at pressures much higher than standard models. They are available in both single and duplex design; leak tight to less than $2x10^{-10}$ scc/sec He.

MAKING THE CORRECT PUMP SELECTION

When neither the inlet nor the discharge is at atmospheric pressure, a rough sizing of the pump can be determined.

Example:

- Required discharge pressure 12 PSIG
- Required inlet pressure is 10 in Hg.
- Required flow is 1 SCFM

Step 1. Eliminate all pumps that will not produce sufficient flow, i.e. pumps smaller than the MB-302 will not produce 1 SCFM at 10" Hg not to mention the further constraint of 12 PSIG at the discharge.

Step 2. Select either the MB-302 or the MB-602.

Step 3. Selecting the MB-602 draw a vertical line on the pressure curve graph from 12 PSIG to the point where the line intersects the MB-602 flow curve. Read horizontally to flow = 4.4 SCFM

Step 4. On the vacuum curve graph draw a line from 4.4 SCFM parallel to the MB-602 flow curve.

Step 5. Draw a vertical line from 10" Hg intersecting new vacuum flow curve. Read horizontally to flow of approximately 1.3 SCFM

Note: When results are marginal check with the factory before ordering.

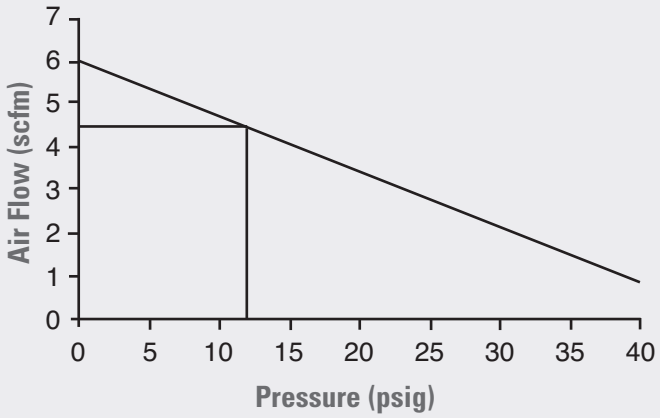

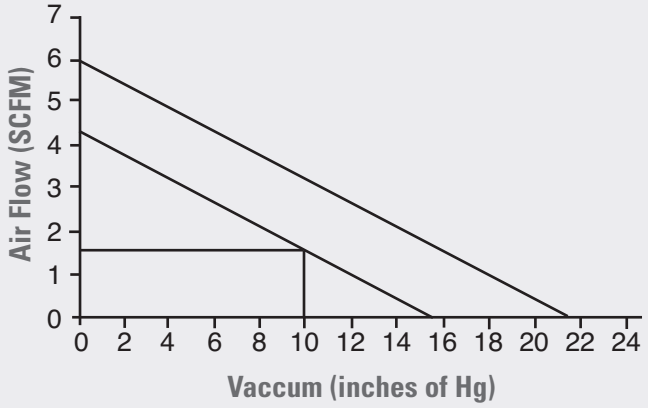

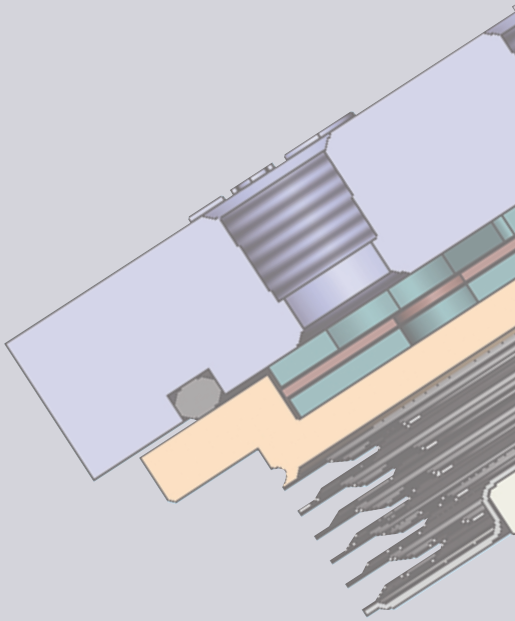

Senior Aerospace

Metal Bellows

1075 Providence Highway
Sharon, Massachusetts 02067
Phone: 781-784-1400
1(800)BELLOWS
Fax: 781-784-1405
Web Site: www.metalbellows.com
Email: marketing@metalbellows.com