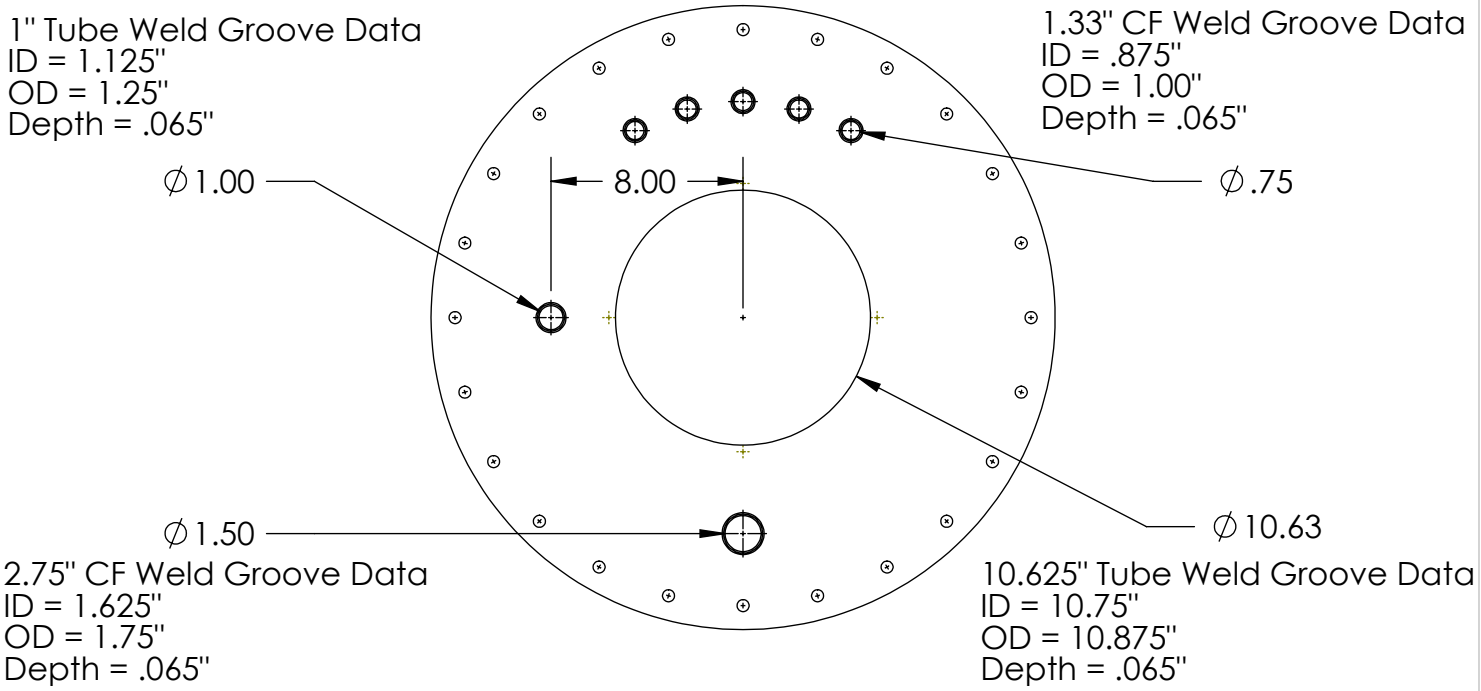

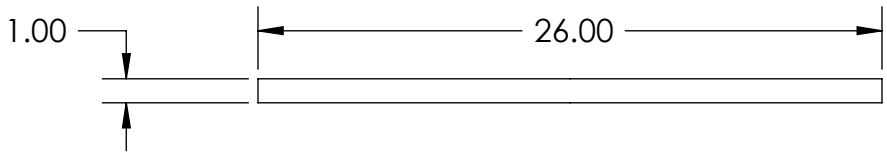

Feedthrough Ports on 18" BC

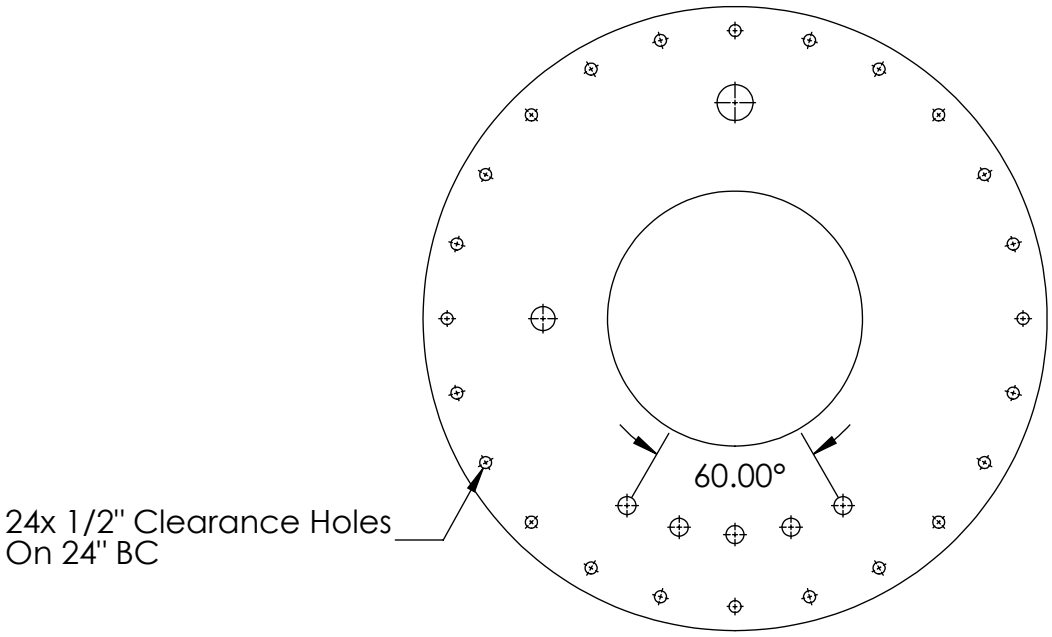

PROPRIETARY AND CONFIDENTIAL
THE INFORMATION CONTAINED IN THIS DRAWING IS THE SOLE PROPERTY OF PRINCETON UNIVERSITY. ANY REPRODUCTION IN PART OR AS A WHOLE WITHOUT THE WRITTEN PERMISSION OF PRINCETON UNIVERSITY IS PROHIBITED.

DIMENSIONS ARE IN INCHES
TOLERANCES:
FRACTIONAL ±
ANGULAR: MACH ± BEND ±
TWO PLACE DECIMAL ±
THREE PLACE DECIMAL ±

MATERIAL
304 Stainless Steel

FINISH

DO NOT SCALE DRAWING

	NAME	DATE
DRAWN	TH	4/10/09
CHECKED		
ENG APPR.		
MFG APPR.		
Q.A.		

COMMENTS:
Any Questions Call Tristen Hohman:
Office # - 609-258-6761
Cell # - 908-399-0783

Drawn By: Tristen Hohman

Blank Flange for Bottom Dewar Lid

SIZE A | DWG. NO. bottom medium dewar lid blank | REV. 1

SCALE:1:12 | WEIGHT: | SHEET 1 OF 1

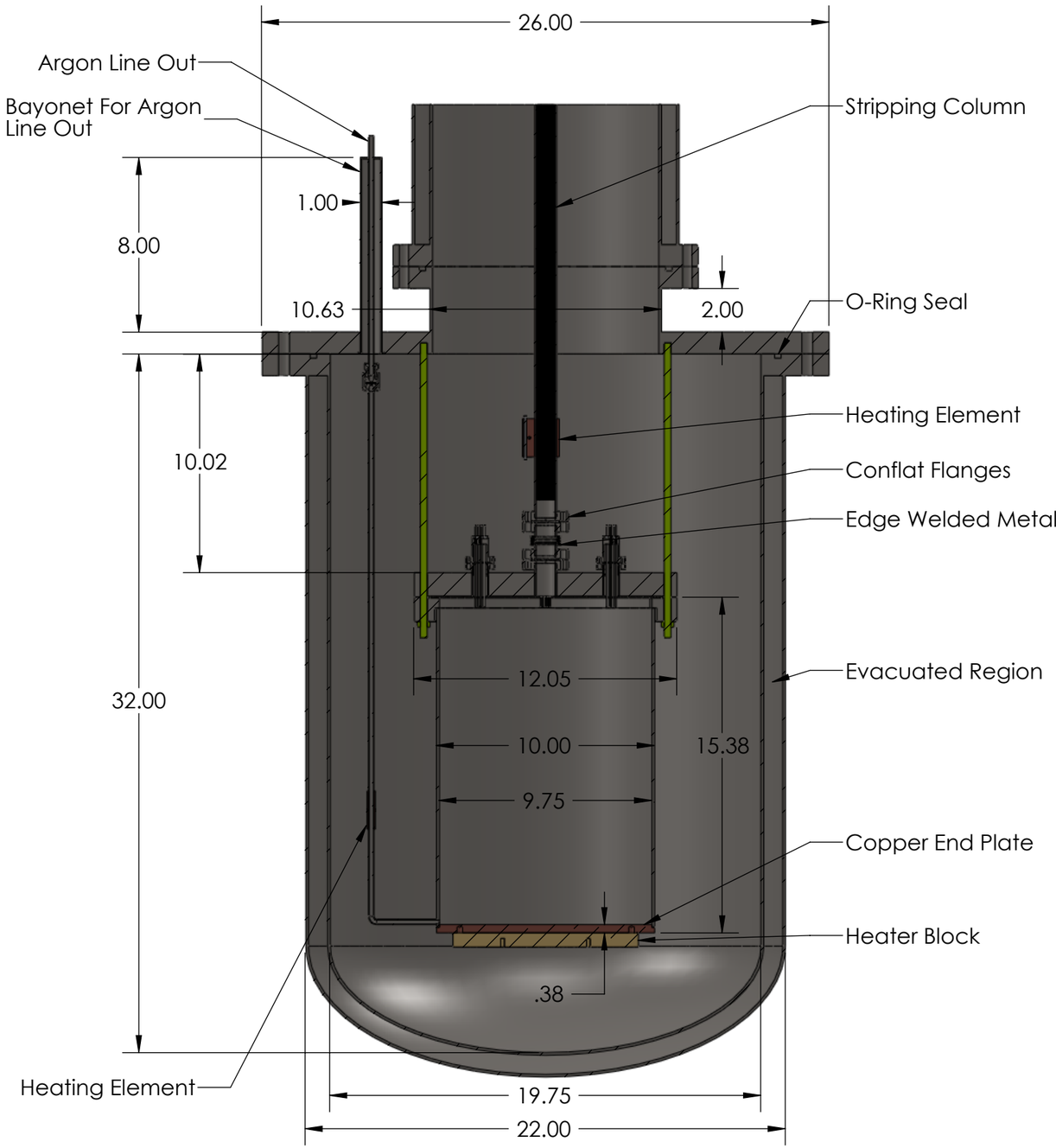

SECTION C-C
SCALE 1 : 6

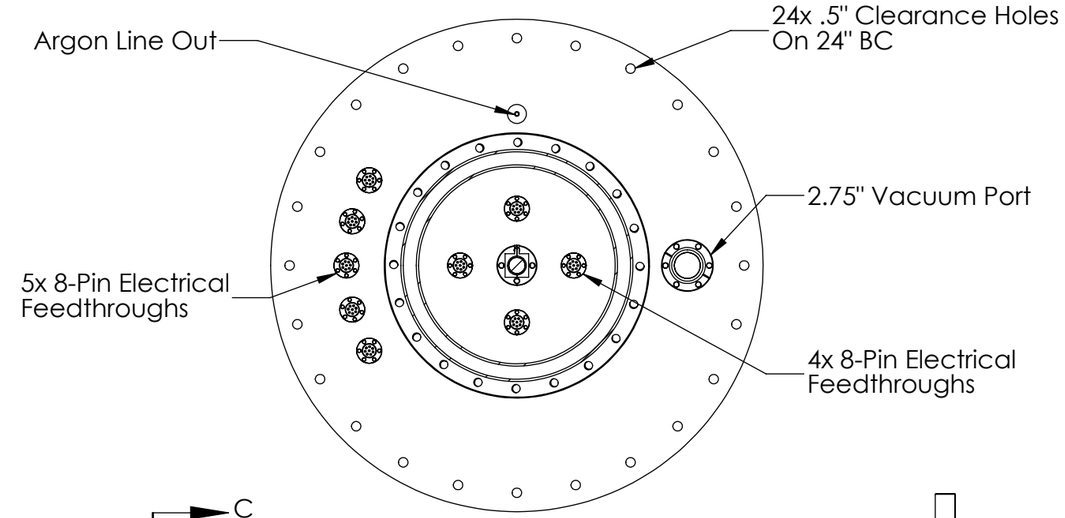

SECTION B-B
SCALE 1 : 8

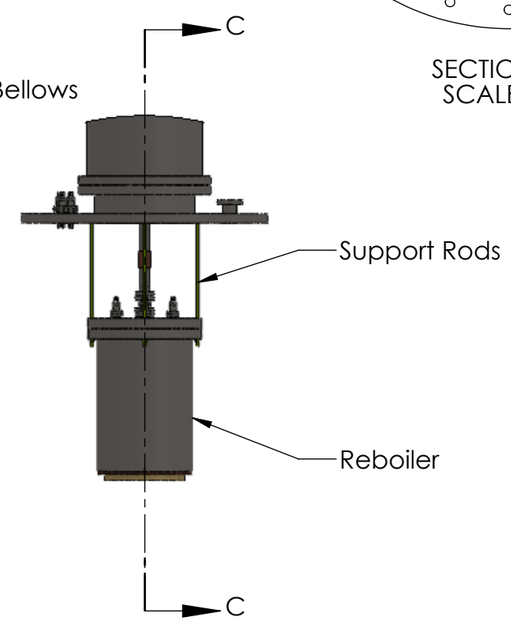

DETAIL A
SCALE 1 : 16

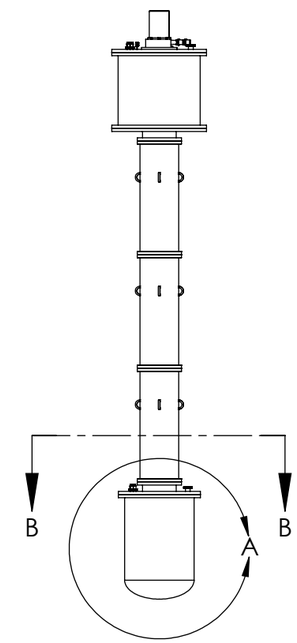

PROPRIETARY AND CONFIDENTIAL

THE INFORMATION CONTAINED IN THIS DRAWING IS THE SOLE PROPERTY OF PRINCETON UNIVERSITY. ANY REPRODUCTION IN PART OR AS A WHOLE WITHOUT THE WRITTEN PERMISSION OF PRINCETON UNIVERSITY IS PROHIBITED.

UNLESS OTHERWISE SPECIFIED:		NAME	DATE
DIMENSIONS ARE IN INCHES TOLERANCES: FRACTIONAL ± ANGULAR: MACH ± BEND ± TWO PLACE DECIMAL ± THREE PLACE DECIMAL ±	DRAWN	TH	4/13/09
	CHECKED		
	ENG APPR.		
	MFG APPR.		
INTERPRET GEOMETRIC TOLERANCING PER:	Q.A.		
MATERIAL Mostly 304 Stainless Steel	COMMENTS: Any Questions Call Tristen Hohman: Office # - 609-258-6761 Cell # - 908-399-0783		
FINISH			
DO NOT SCALE DRAWING			

Drawn By: Tristen Hohman

TITLE:

Bottom Of Cryostripping Column

SIZE	DWG. NO.	REV
B	cryostripping column revised 3 bottom	3

SCALE: 1:48 WEIGHT: SHEET 1 OF 1

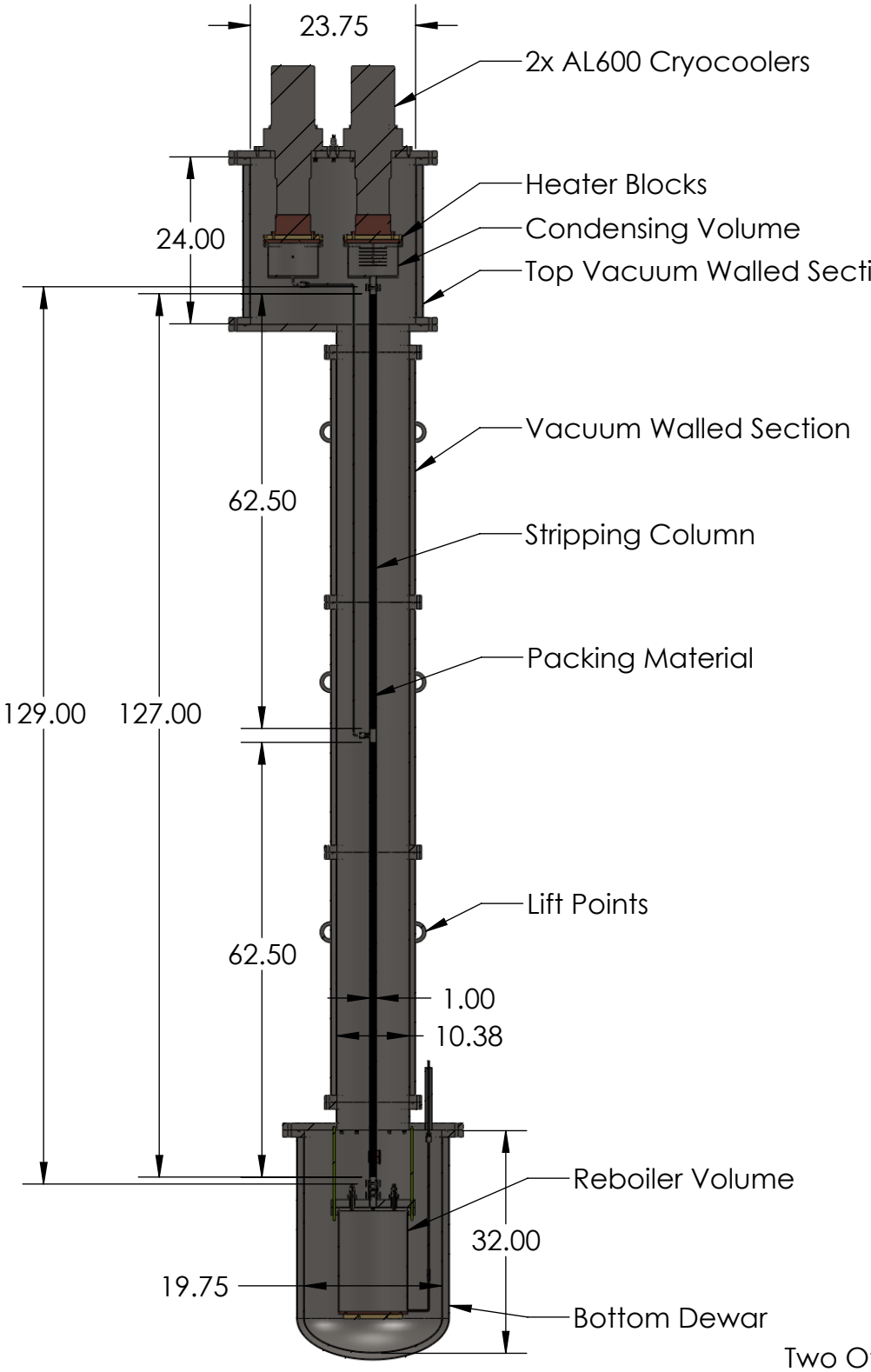

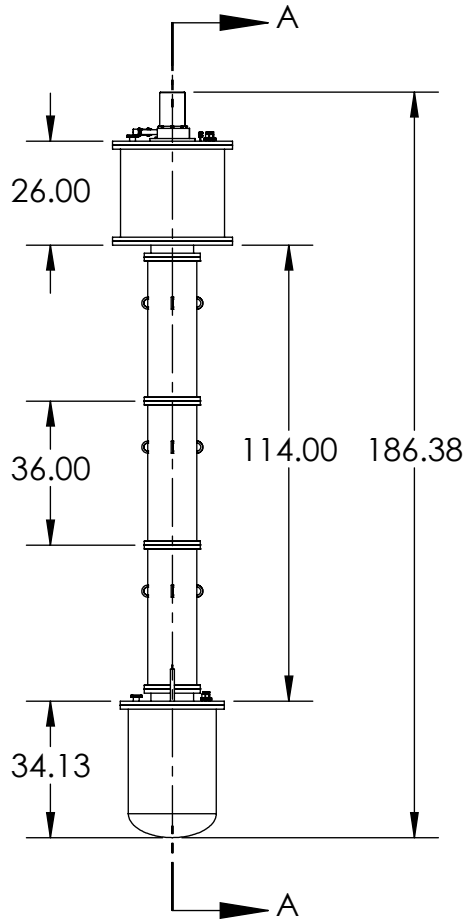

Two Of The Three Vacuum Walled Sections Will Be Supplied Along With The 2 AL600 Cryocoolers And The Three Heater Blocks.

SECTION A-A
SCALE 1 : 24

		NAME	DATE
DIMENSIONS ARE IN INCHES TOLERANCES: FRACTIONAL ± ANGULAR: MACH ± BEND ± TWO PLACE DECIMAL ± THREE PLACE DECIMAL ±	DRAWN	TH	4/13/09
	CHECKED		
	ENG APPR.		
	MFG APPR.		
MATERIAL Mostly 304 Stainless Steel	Q.A.		
FINISH	COMMENTS: Any Questions Call Tristen Hohman: Office # - 609-258-6761 Cell # -908-399-0783		
DO NOT SCALE DRAWING			

Drawn By: Tristen Hohman

Main View of Cryostripping Column

SIZE	DWG. NO.	REV.
A	cryostripping column revised 3	3
SCALE:1:48	WEIGHT:	SHEET 1 OF 1

PROPRIETARY AND CONFIDENTIAL
THE INFORMATION CONTAINED IN THIS DRAWING IS THE SOLE PROPERTY OF PRINCETON UNIVERSITY. ANY REPRODUCTION IN PART OR AS A WHOLE WITHOUT THE WRITTEN PERMISSION OF PRINCETON UNIVERSITY IS PROHIBITED.

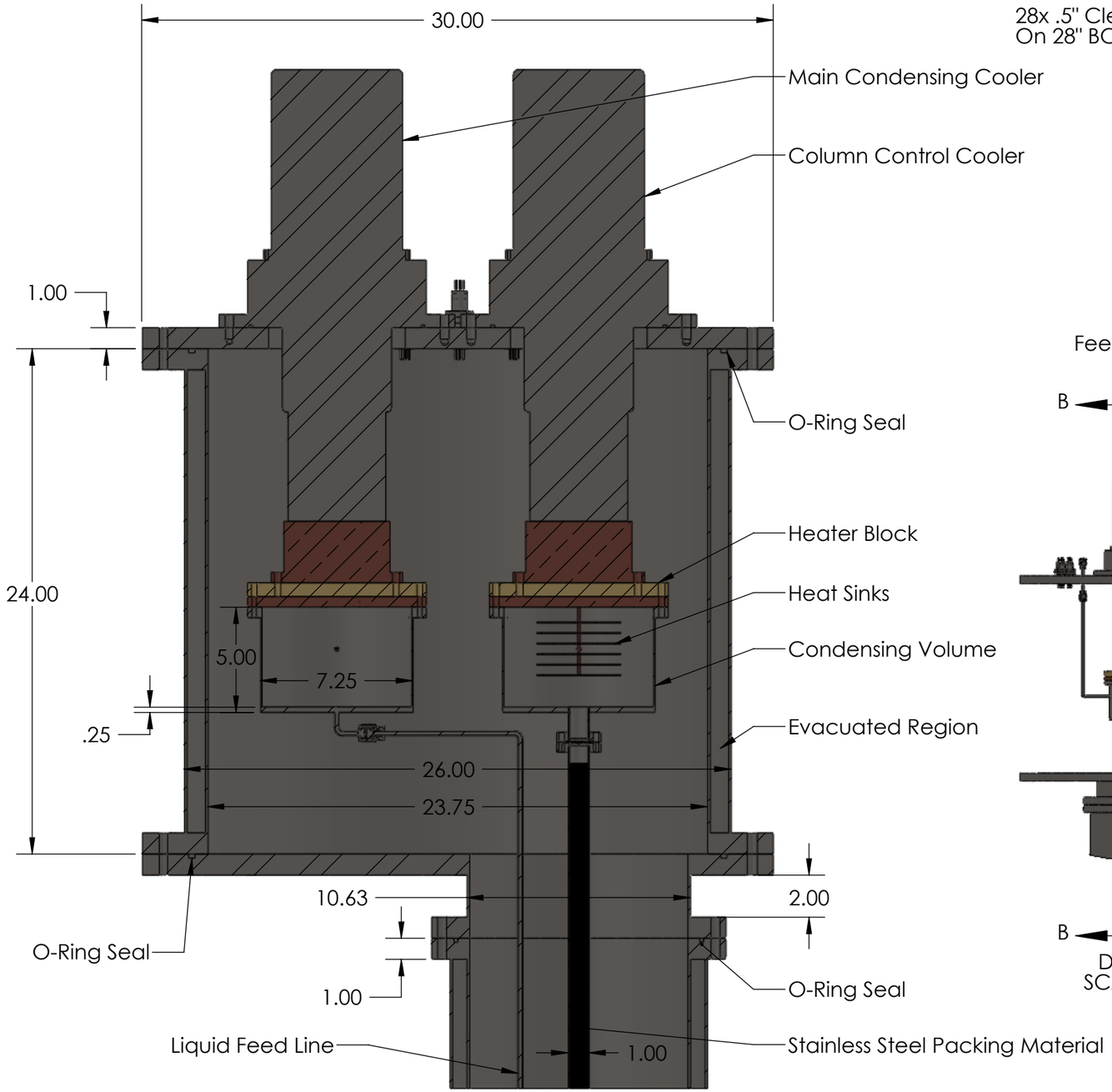

SECTION B-B
SCALE 1 : 6

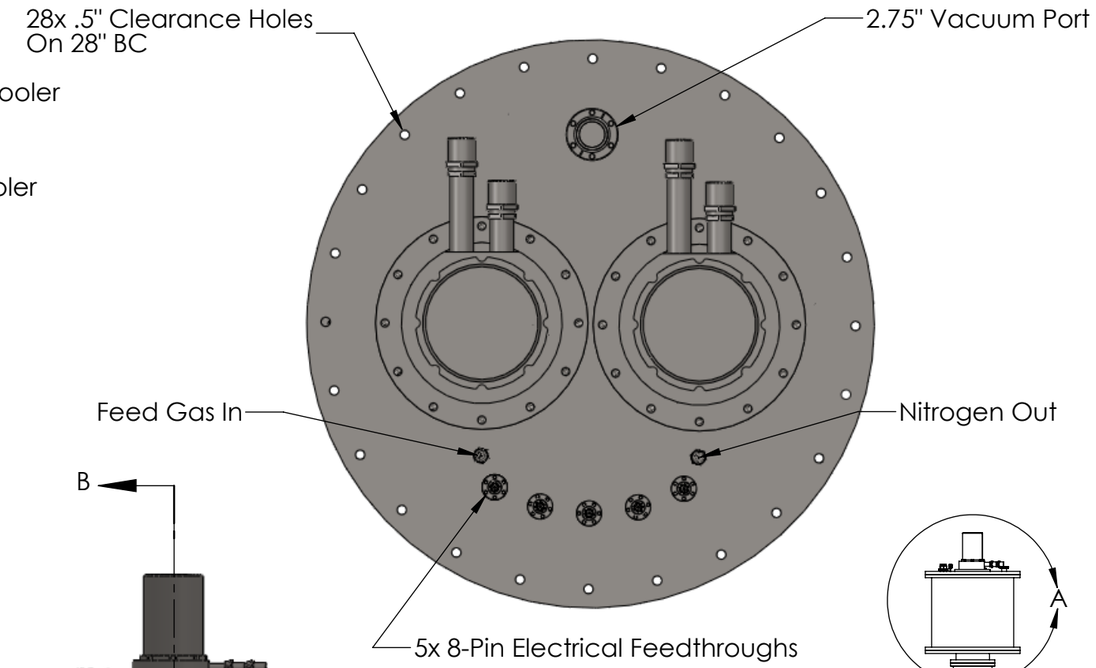

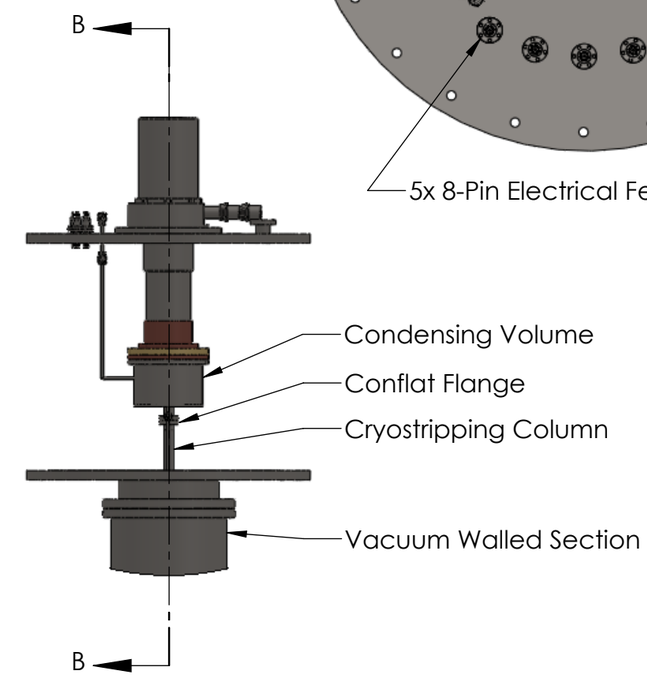

DETAIL A
SCALE 1 : 16

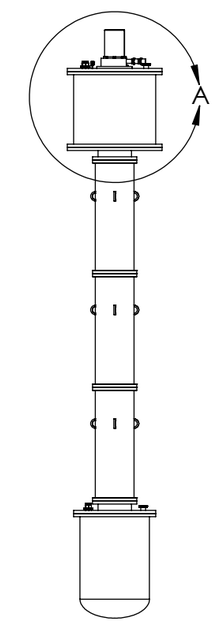

PROPRIETARY AND CONFIDENTIAL
THE INFORMATION CONTAINED IN THIS DRAWING IS THE SOLE PROPERTY OF PRINCETON UNIVERSITY. ANY REPRODUCTION IN PART OR AS A WHOLE WITHOUT THE WRITTEN PERMISSION OF PRINCETON UNIVERSITY IS PROHIBITED.

UNLESS OTHERWISE SPECIFIED:		NAME	DATE
DIMENSIONS ARE IN INCHES TOLERANCES: FRACTIONAL ± ANGULAR: MACH ± BEND ± TWO PLACE DECIMAL ± THREE PLACE DECIMAL ±	DRAWN	TH	4/13/09
	CHECKED		
	ENG APPR.		
	MFG APPR.		
INTERPRET GEOMETRIC TOLERANCING PER:	Q.A.		
MATERIAL Mostly 304 Stainless Steel	COMMENTS: Any Questions Call Tristen Hohman: Office # - 609-258-6761 Cell # - 908-399-0783		
FINISH			
DO NOT SCALE DRAWING			

Drawn By: Tristen Hohman

TITLE:

Top Of Cryostripping Column

SIZE	DWG. NO.	REV
B	cryostripping column revised 3 top	3
SCALE: 1:48	WEIGHT:	SHEET 1 OF 1

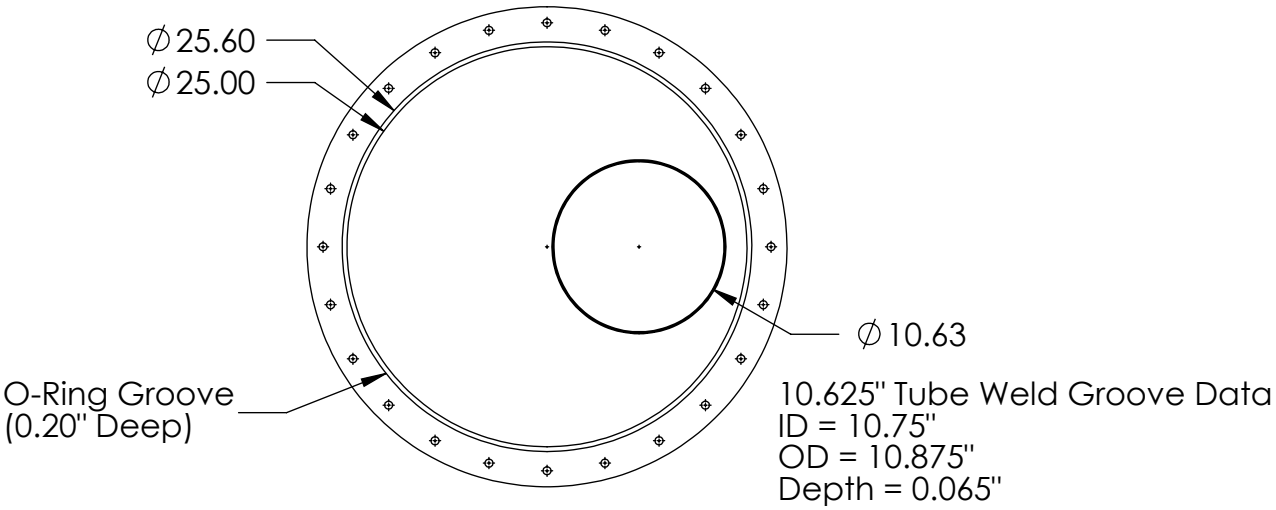

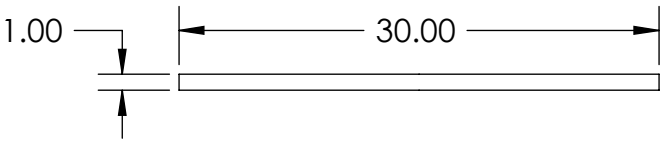

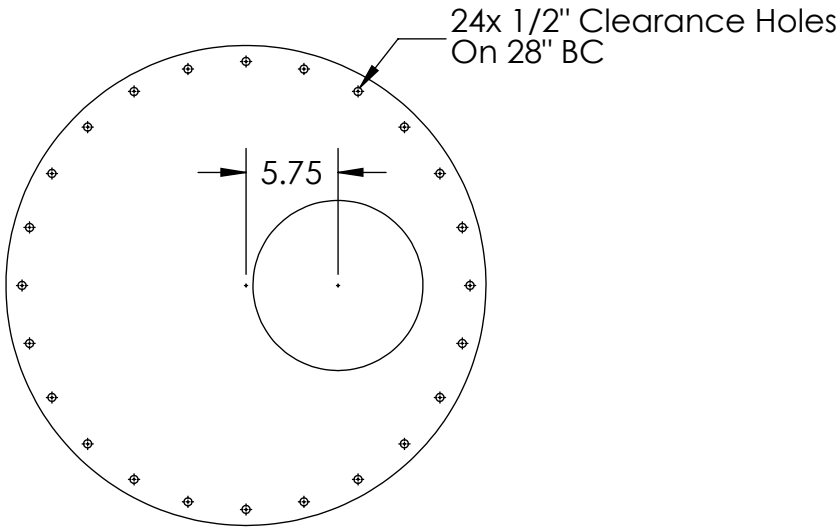

DIMENSIONS ARE IN INCHES TOLERANCES: FRACTIONAL ± ANGULAR: MACH ± BEND ± TWO PLACE DECIMAL ± THREE PLACE DECIMAL ±		NAME	DATE
	DRAWN	TH	4/13/09
	CHECKED		
	ENG APPR.		
	MFG APPR.		
	Q.A.		
MATERIAL 304 Stainless Steel	COMMENTS: Any Questions Call Tristen Hohman: Office # - 609-258-6761 Cell # - 908-399-0783		
FINISH			
DO NOT SCALE DRAWING			

Drawn By: Tristen Hohman

Blank Bottom Flange for Large Top Dewar

SIZE	DWG. NO.	REV.
A	large top dewar bottom flange 2 condensers blank	1
SCALE:1:16	WEIGHT:	SHEET 1 OF 1

PROPRIETARY AND CONFIDENTIAL
THE INFORMATION CONTAINED IN THIS DRAWING IS THE SOLE PROPERTY OF PRINCETON UNIVERSITY. ANY REPRODUCTION IN PART OR AS A WHOLE WITHOUT THE WRITTEN PERMISSION OF PRINCETON UNIVERSITY IS PROHIBITED.

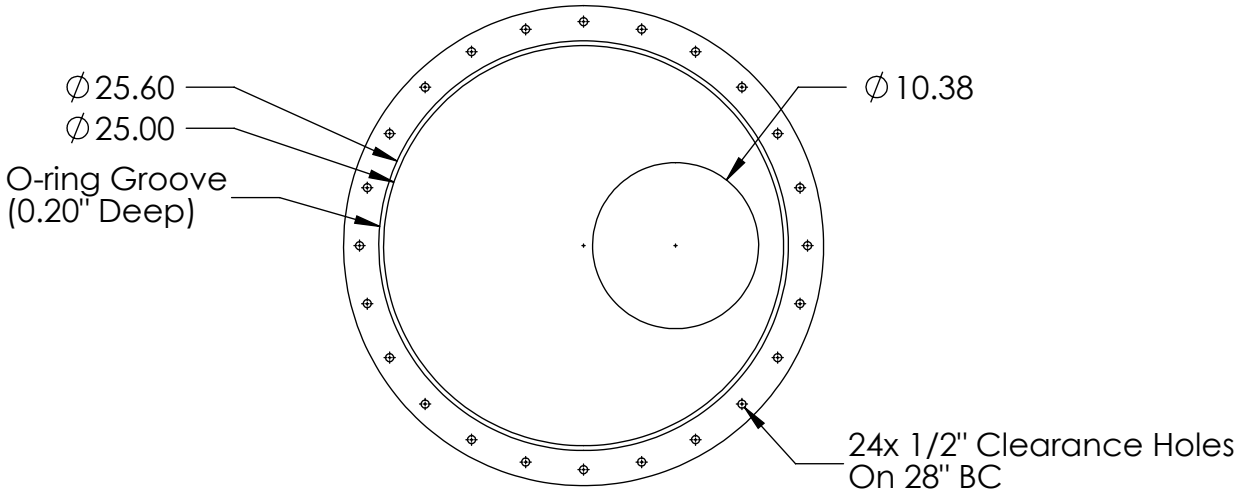

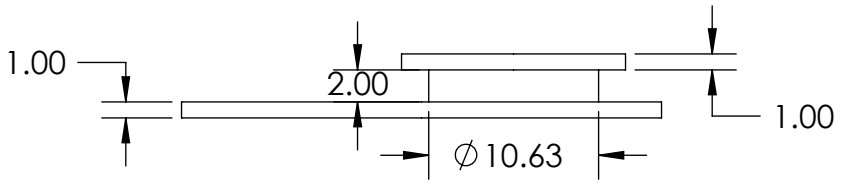

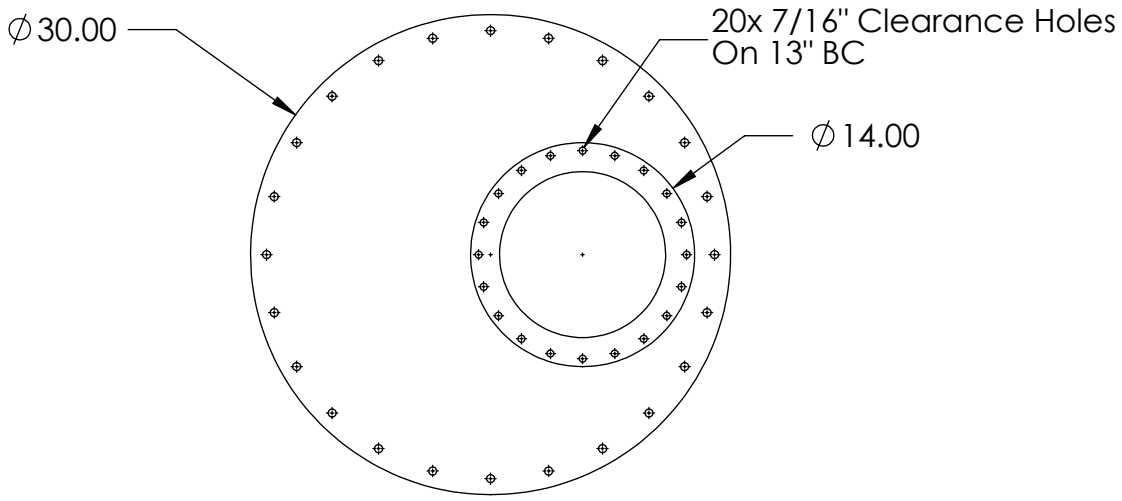

PROPRIETARY AND CONFIDENTIAL
THE INFORMATION CONTAINED IN THIS DRAWING IS THE SOLE PROPERTY OF PRINCETON UNIVERSITY. ANY REPRODUCTION IN PART OR AS A WHOLE WITHOUT THE WRITTEN PERMISSION OF PRINCETON UNIVERSITY IS PROHIBITED.

DIMENSIONS ARE IN INCHES
TOLERANCES:
FRACTIONAL ±
ANGULAR: MACH ± BEND ±
TWO PLACE DECIMAL ±
THREE PLACE DECIMAL ±

MATERIAL
304 Stainless Steel

FINISH

DO NOT SCALE DRAWING

	NAME	DATE
DRAWN	TH	4/13/09
CHECKED		
ENG APPR.		
MFG APPR.		
Q.A.		

COMMENTS:
Any Questions Call Tristen Hohman:
Office # - 609-258-6761
Cell # - 908-399-0783

Drawn By: Tristen Hohman

Assembled Bottom Flange for Large Top Dewar

SIZE	DWG. NO.	REV.
A	large top dewar bottom flange 2 condensers	1

SCALE:1:16 WEIGHT: SHEET 1 OF 1

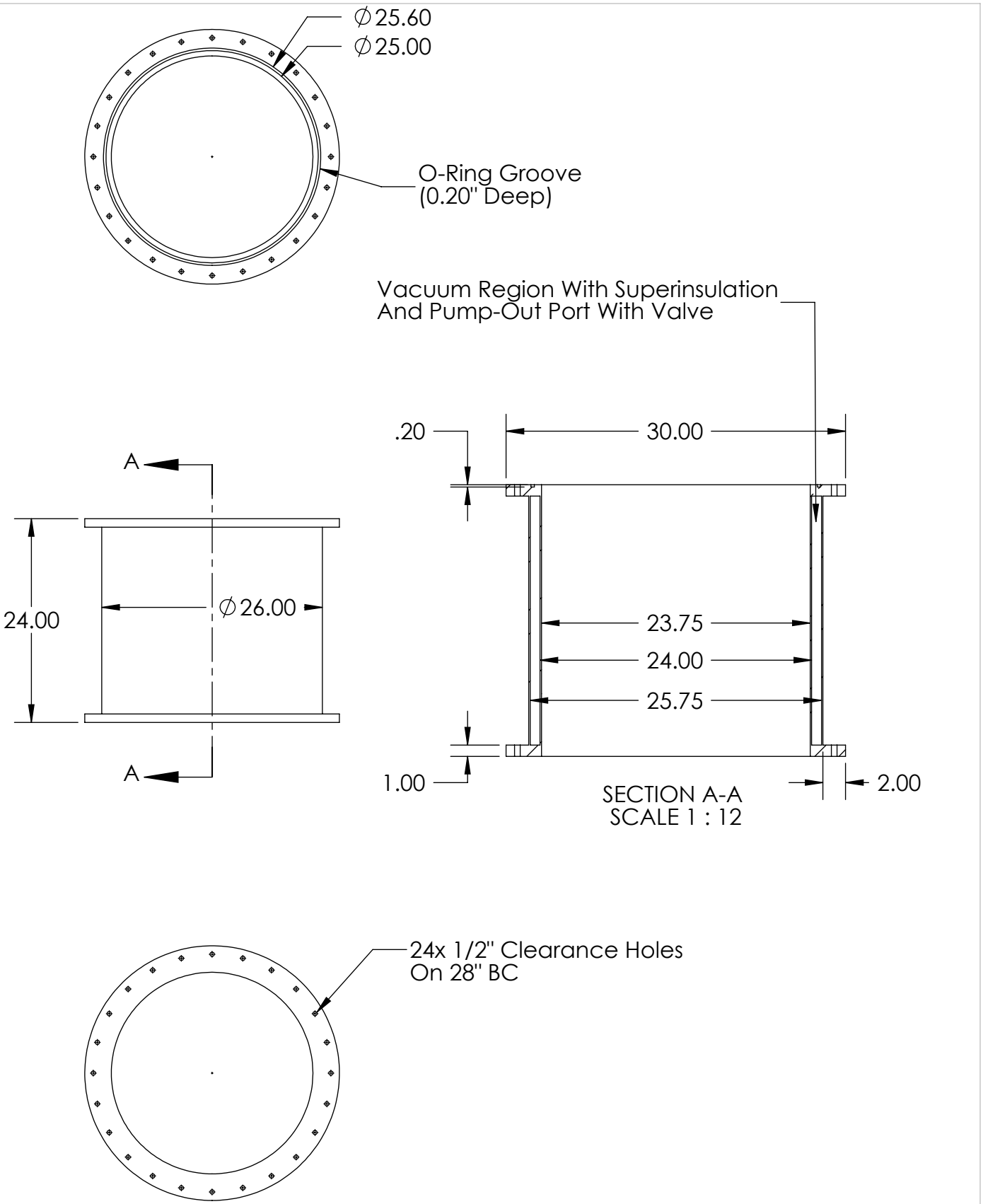

		NAME	DATE
DIMENSIONS ARE IN INCHES TOLERANCES: FRACTIONAL ± ANGULAR: MACH ± BEND ± TWO PLACE DECIMAL ± THREE PLACE DECIMAL ±	DRAWN	TH	4/10/09
	CHECKED		
	ENG APPR.		
	MFG APPR.		
MATERIAL 304 Stainless Steel	Q.A.		
FINISH	COMMENTS: Any Questions Call Tristen Hohman: Office # - 609-258-6761 Cell # - 908-399-0783		
DO NOT SCALE DRAWING			

Drawn By: Tristen Hohman

Top Dewar Section for Two Condensers

SIZE	DWG. NO.	REV.
A	large top dewar for two condensers	1
SCALE:1:16	WEIGHT:	SHEET 1 OF 1

PROPRIETARY AND CONFIDENTIAL
THE INFORMATION CONTAINED IN THIS DRAWING IS THE SOLE PROPERTY OF PRINCETON UNIVERSITY. ANY REPRODUCTION IN PART OR AS A WHOLE WITHOUT THE WRITTEN PERMISSION OF PRINCETON UNIVERSITY IS PROHIBITED.

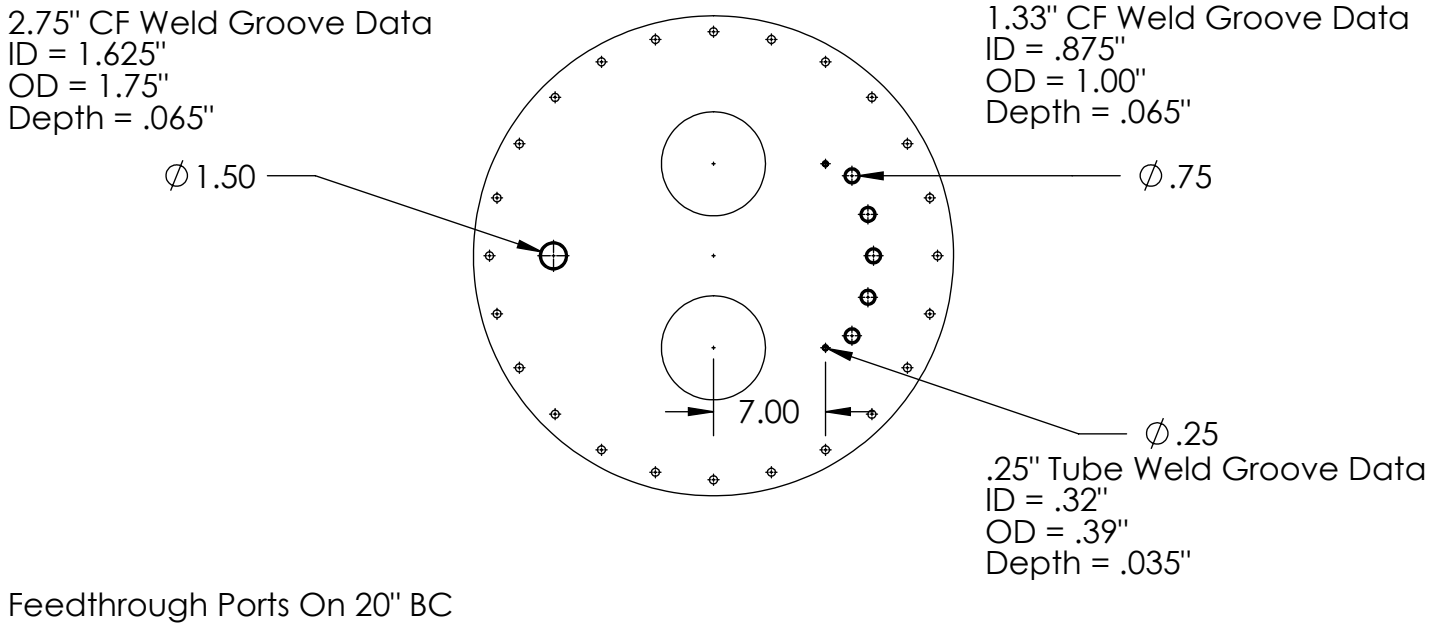

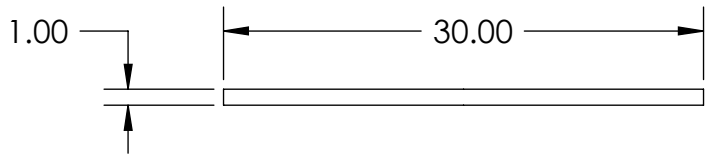

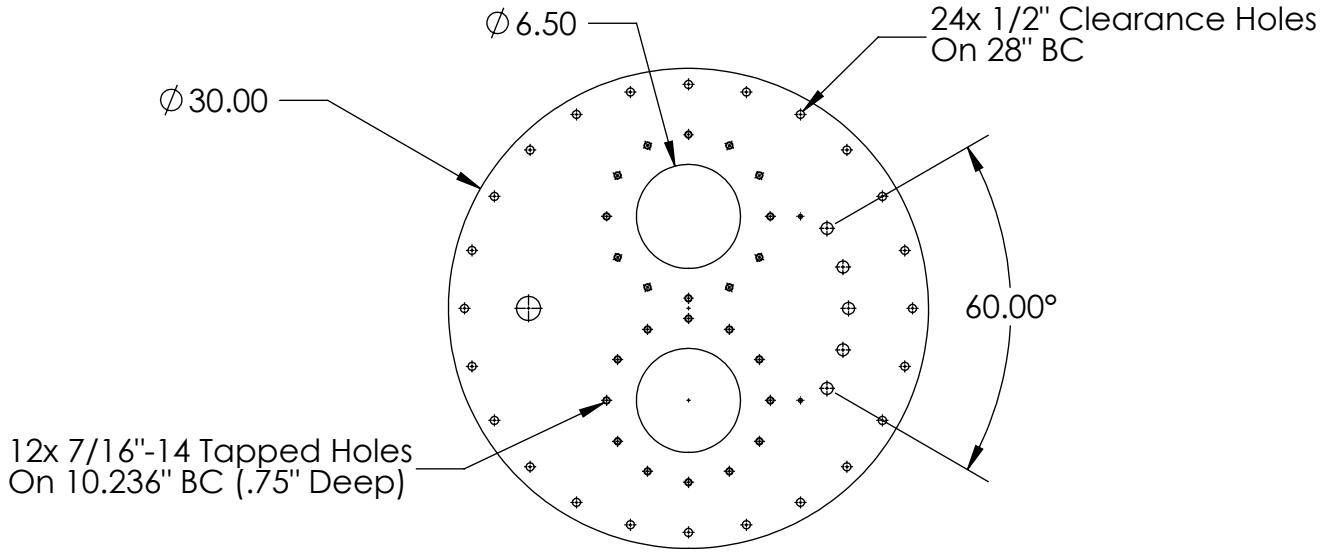

PROPRIETARY AND CONFIDENTIAL
THE INFORMATION CONTAINED IN THIS DRAWING IS THE SOLE PROPERTY OF PRINCETON UNIVERSITY. ANY REPRODUCTION IN PART OR AS A WHOLE WITHOUT THE WRITTEN PERMISSION OF PRINCETON UNIVERSITY IS PROHIBITED.

DIMENSIONS ARE IN INCHES
TOLERANCES:
FRACTIONAL ±
ANGULAR: MACH ± BEND ±
TWO PLACE DECIMAL ±
THREE PLACE DECIMAL ±

MATERIAL 304 Stainless Steel

FINISH

DO NOT SCALE DRAWING

	NAME	DATE
DRAWN	TH	4/10/09
CHECKED		
ENG APPR.		
MFG APPR.		
Q.A.		

COMMENTS:
Any Questions Call Tristen Hohman:
Office # - 609-258-6761
Cell # - 908-399-0783

Drawn By: Tristen Hohman

Blank Flange for
Top Lid of Top Dewar

SIZE A | DWG. NO. large top dewar lid 2 condensers blank | REV. 1

SCALE:1:16 | WEIGHT: | SHEET 1 OF 1

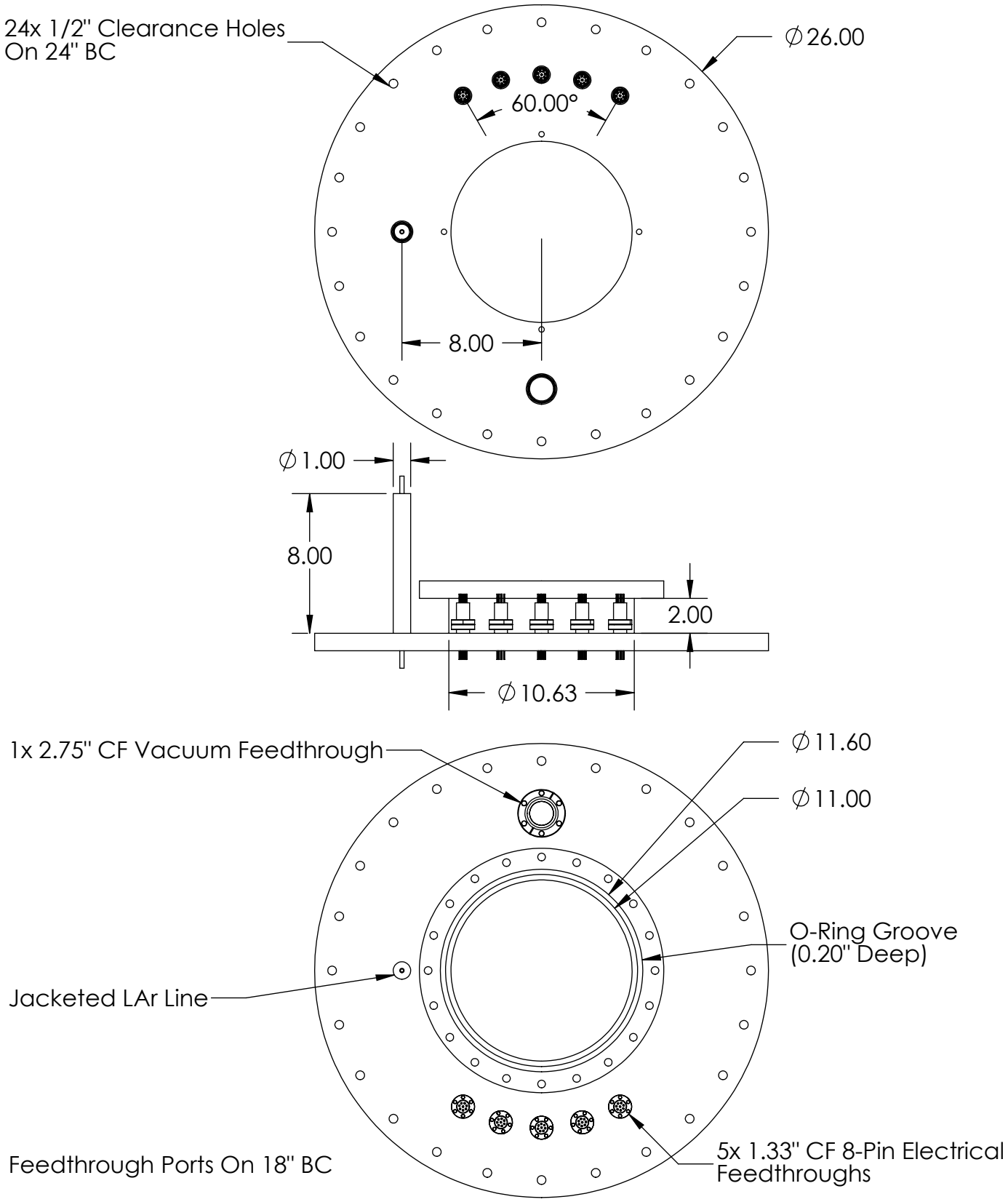

PROPRIETARY AND CONFIDENTIAL
THE INFORMATION CONTAINED IN THIS DRAWING IS THE SOLE PROPERTY OF PRINCETON UNIVERSITY. ANY REPRODUCTION IN PART OR AS A WHOLE WITHOUT THE WRITTEN PERMISSION OF PRINCETON UNIVERSITY IS PROHIBITED.

DIMENSIONS ARE IN INCHES
TOLERANCES:
FRACTIONAL ±
ANGULAR: MACH ± BEND ±
TWO PLACE DECIMAL ±
THREE PLACE DECIMAL ±

MATERIAL
304 Stainless Steel

FINISH

DO NOT SCALE DRAWING

	NAME	DATE
DRAWN	TH	4/10/09
CHECKED		
ENG APPR.		
MFG APPR.		
Q.A.		

COMMENTS:
Any Questions Call Tristen Hohman:
Office # - 609-258-6761
Cell # - 908-399-0783

Drawn By: Tristen Hohman

Assembled Top Flange for Bottom Dewar

SIZE	DWG. NO.	REV.
A	medium bottom dewar flange assem	1

SCALE:1:12 WEIGHT: SHEET 1 OF 1

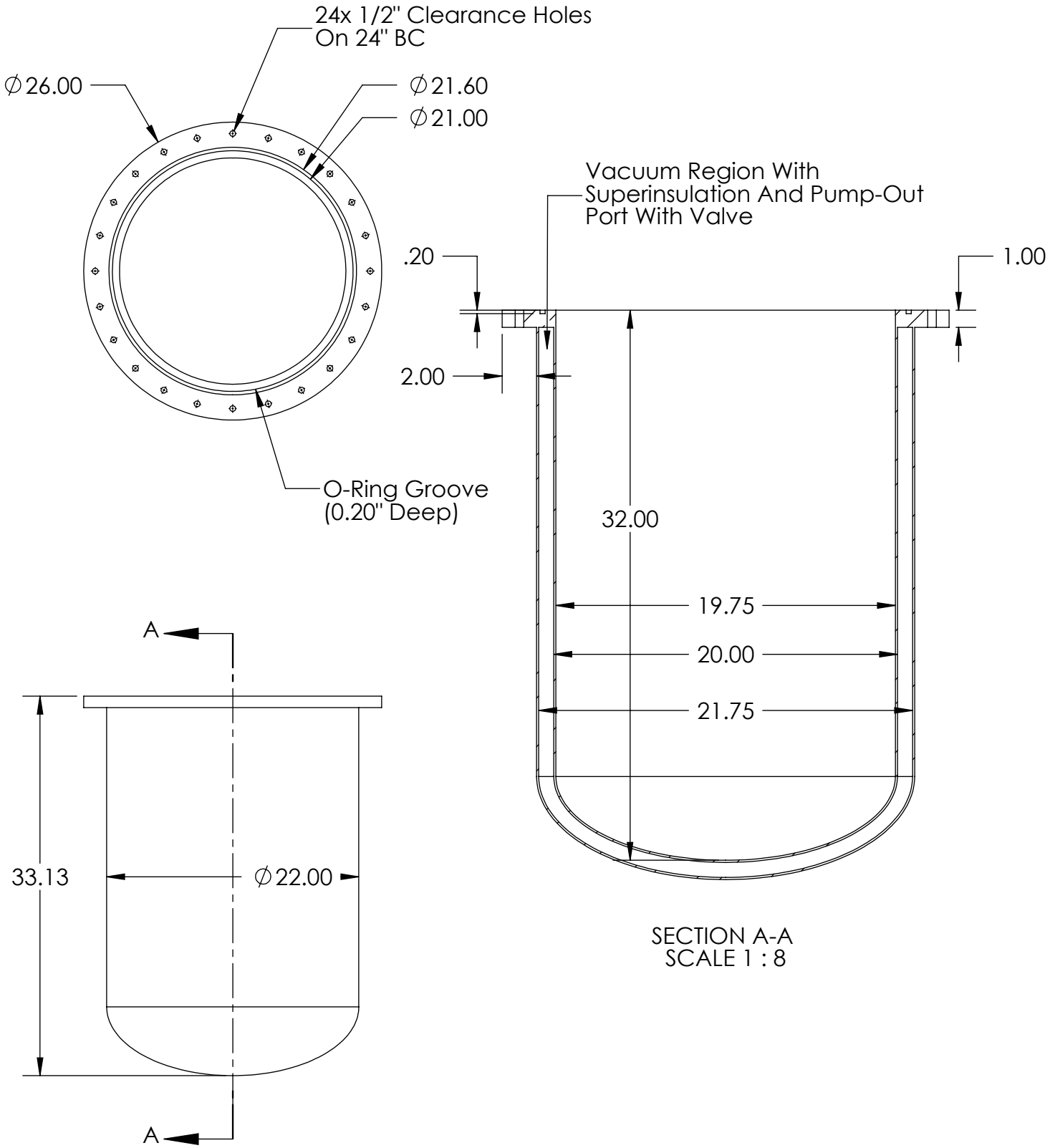

PROPRIETARY AND CONFIDENTIAL
THE INFORMATION CONTAINED IN THIS DRAWING IS THE SOLE PROPERTY OF PRINCETON UNIVERSITY. ANY REPRODUCTION IN PART OR AS A WHOLE WITHOUT THE WRITTEN PERMISSION OF PRINCETON UNIVERSITY IS PROHIBITED.

DIMENSIONS ARE IN INCHES
TOLERANCES:
FRACTIONAL ±
ANGULAR: MACH ± BEND ±
TWO PLACE DECIMAL ±
THREE PLACE DECIMAL ±

MATERIAL
304 Stainless Steel

FINISH

DO NOT SCALE DRAWING

	NAME	DATE
DRAWN	TH	4/10/09
CHECKED		
ENG APPR.		
MFG APPR.		
Q.A.		

COMMENTS:
Any Questions Call Tristen Hohman:
Office # - 609-258-6761
Cell # - 908-399-0783

Drawn By: Tristen Hohman

Bottom Dewar

SIZE	DWG. NO.	REV.
A	medium bottom dewar	1
SCALE:1:12	WEIGHT:	SHEET 1 OF 1

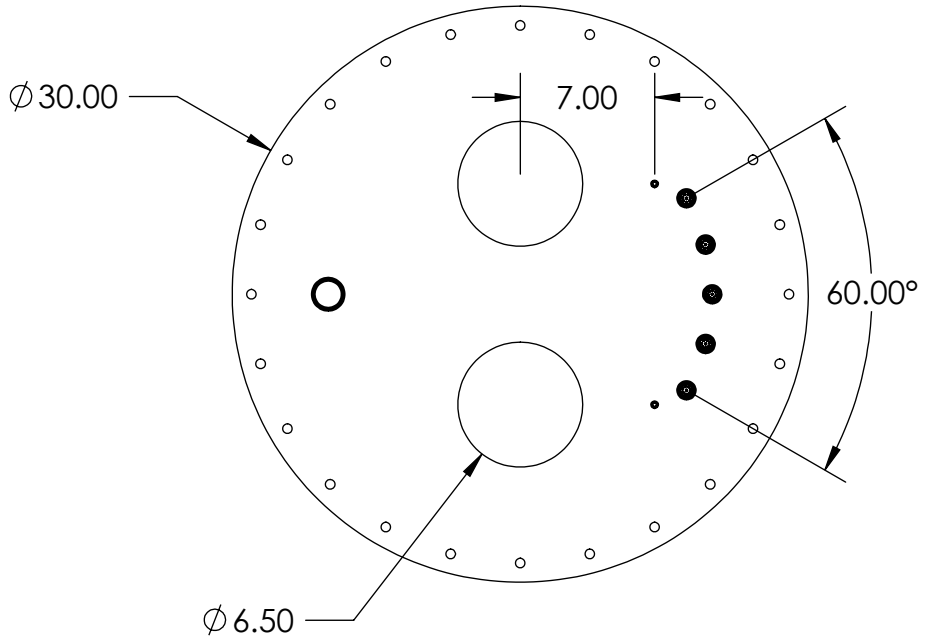

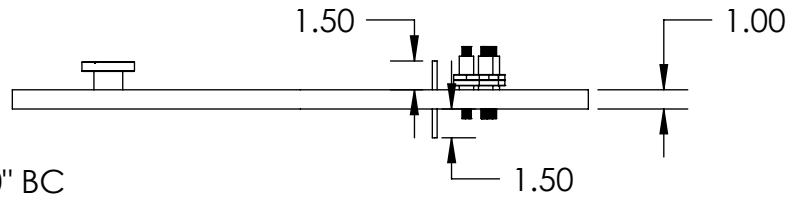

Feedthrough Ports on 20" BC

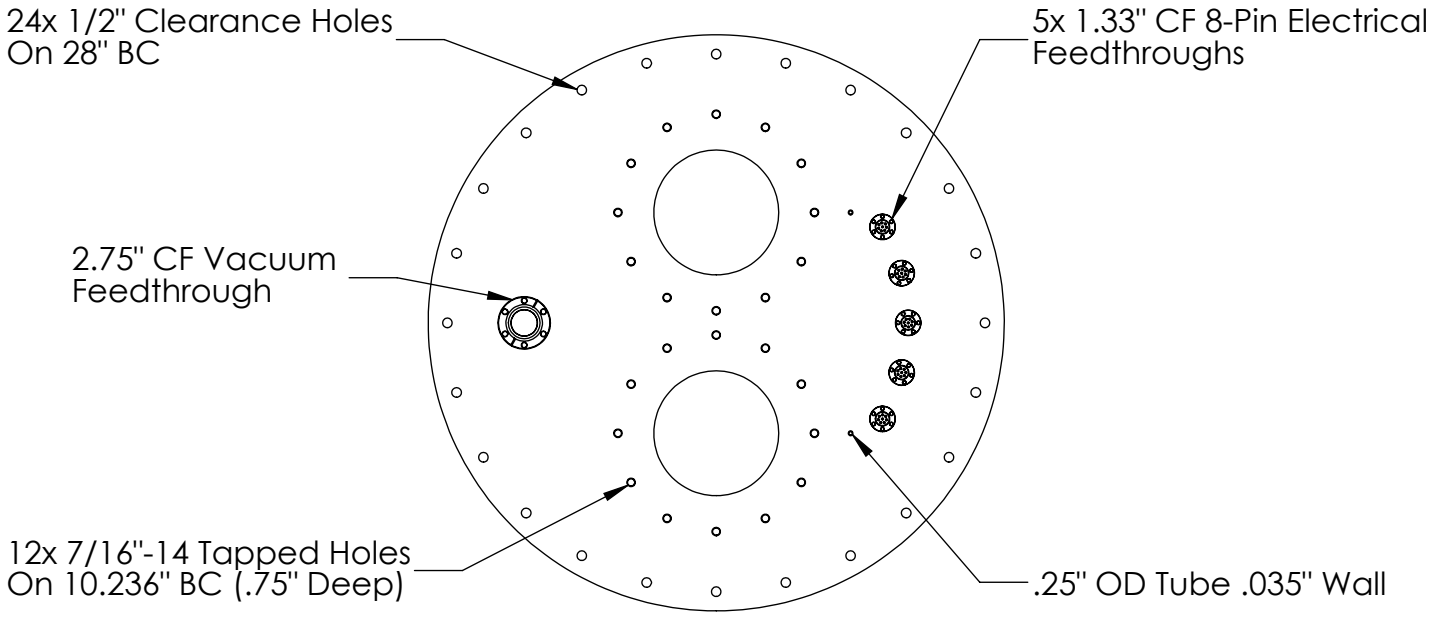

		NAME	DATE
DIMENSIONS ARE IN INCHES TOLERANCES: FRACTIONAL ± ANGULAR: MACH ± BEND ± TWO PLACE DECIMAL ± THREE PLACE DECIMAL ±	DRAWN	TH	4/10/09
	CHECKED		
	ENG APPR.		
	MFG APPR.		
MATERIAL 304 Stainless Steel	Q.A.		
FINISH	COMMENTS: Any Questions Call Tristen Hohman: Office # - 609-258-6761 Cell # - 908-399-0783		
DO NOT SCALE DRAWING			

Drawn By: Tristen Hohman

Assembled Top FLange
for Top Dewar

SIZE	DWG. NO.	REV.
A	top dewar top flange assem	1
SCALE:1:16	WEIGHT:	SHEET 1 OF 1

PROPRIETARY AND CONFIDENTIAL
THE INFORMATION CONTAINED IN THIS DRAWING IS THE SOLE PROPERTY OF PRINCETON UNIVERSITY. ANY REPRODUCTION IN PART OR AS A WHOLE WITHOUT THE WRITTEN PERMISSION OF PRINCETON UNIVERSITY IS PROHIBITED.

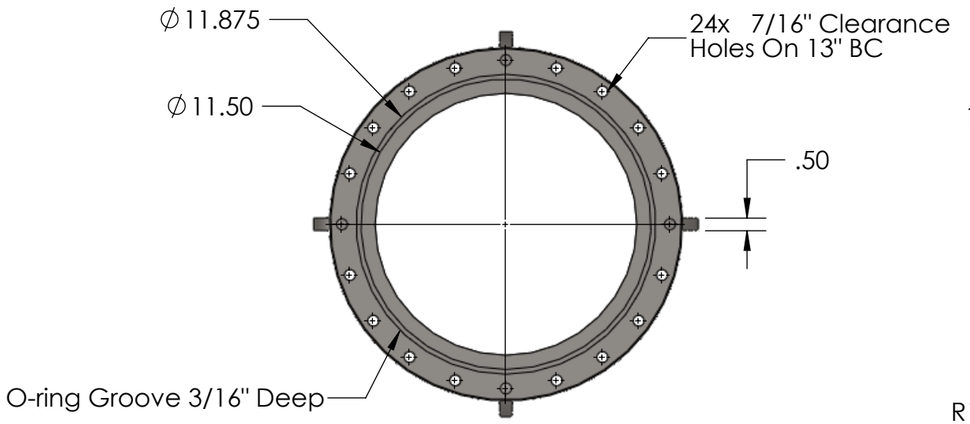

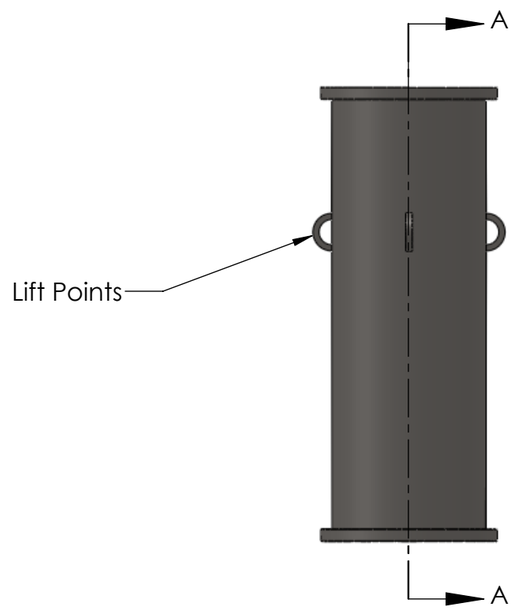

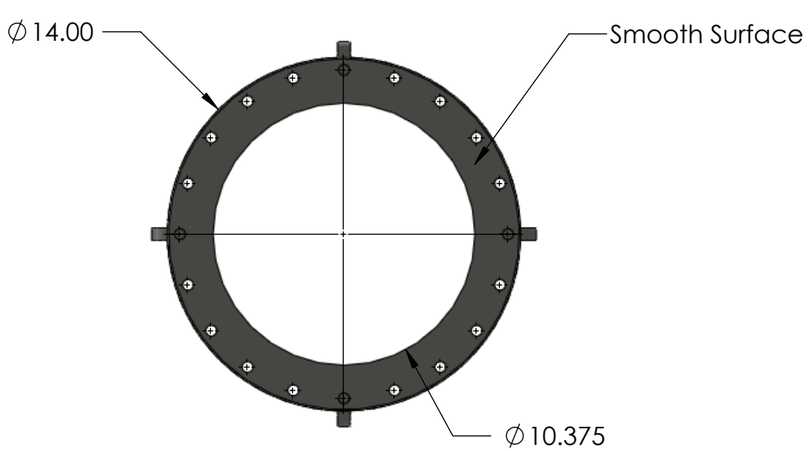

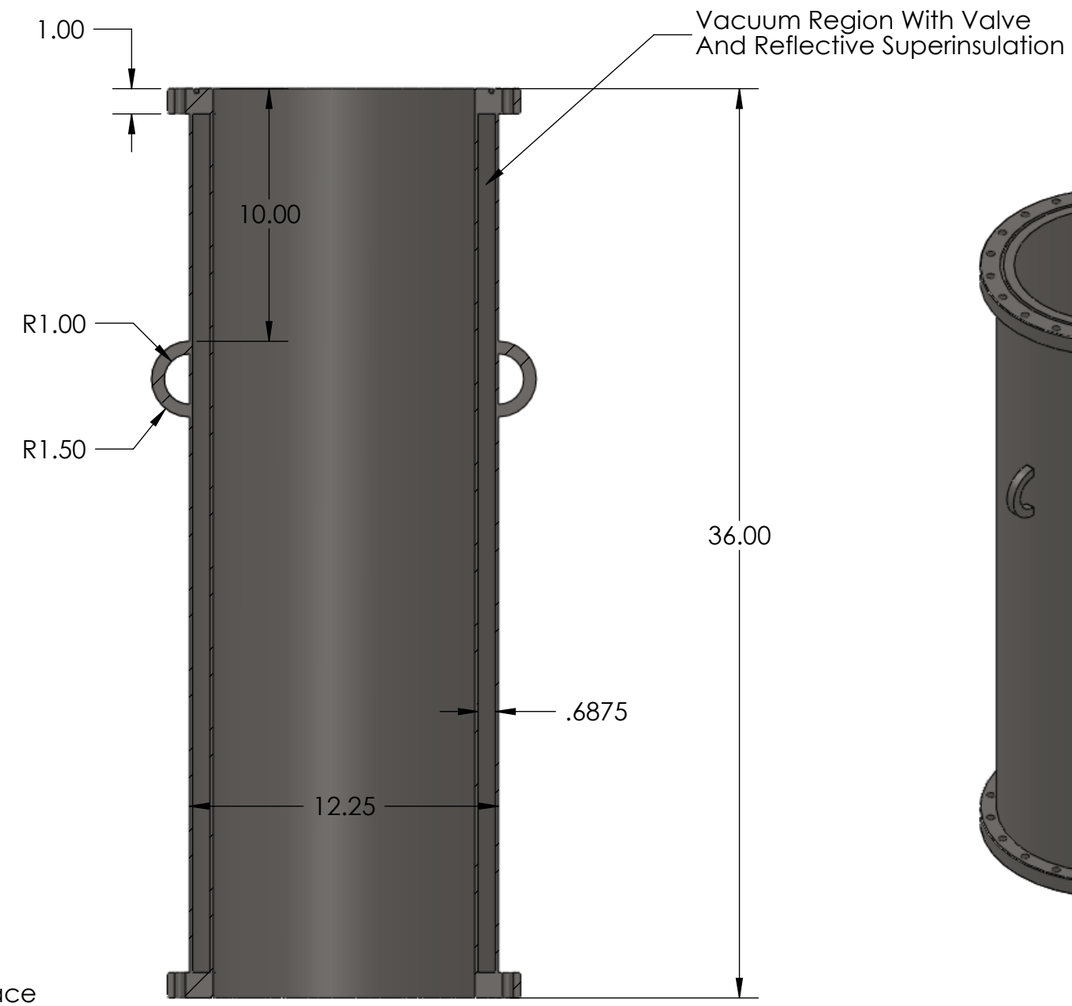

SECTION A-A
SCALE 1 : 6

PROPRIETARY AND CONFIDENTIAL
THE INFORMATION CONTAINED IN THIS DRAWING IS THE SOLE PROPERTY OF PRINCETON UNIVERSITY. ANY REPRODUCTION IN PART OR AS A WHOLE WITHOUT THE WRITTEN PERMISSION OF PRINCETON UNIVERSITY IS PROHIBITED.

UNLESS OTHERWISE SPECIFIED:		NAME	DATE
DIMENSIONS ARE IN INCHES TOLERANCES: FRACTIONAL ± ANGULAR: MACH ± BEND ± TWO PLACE DECIMAL ± THREE PLACE DECIMAL ±	DRAWN	TH	3/17/09
	CHECKED		
	ENG APPR.		
	MFG APPR.		
INTERPRET GEOMETRIC TOLERANCING PER:	Q.A.		
MATERIAL 304 Stainless Steel	COMMENTS: Any Questions Call Tristen Hohman: Office # - 609-258-6761 Cell # - 908-399-0783		
FINISH			
DO NOT SCALE DRAWING			

Drawn By: Tristen Hohman

TITLE:
Vacuum Insulated Tube

SIZE	DWG. NO.	REV
B	vacuum walled tube	1

SCALE: 1:12 WEIGHT: SHEET 1 OF 1