LAPD Procedure Summary

The following three dewar and bottle change procedures can be performed at anytime.

Dewar change procedure (argon source #1)

Bottle change procedure (argon source #2)

Bottle change procedure (argon source #3)

The following procedures should be performed in order:

1. High purity argon piping preparation procedure
2. Oxygen and molecular sieve filter regeneration procedure – prior to system startup
3. Tank configuration prior to system startup procedure
4. Tank purging procedure
5. Tank gas recirculation procedure
6. Tank filling procedure
    a. Warm
    b. Cold
7. Tank refrigeration procedure
8. Tank refrigeration with liquid pump – Normal Operating Configuration
9. Tank emptying procedure

If the filters need to be regenerated while the system is cold the following procedure should be followed:

10. Oxygen and molecular sieve filter regeneration procedure – with liquid in tank

These three bottle and dewar change procedures may be performed by PPD techs trained in these procedures or by PPD techs under the supervision of a PPD engineer. Each of the three argon sources has a PLC alarm which will alert personnel when the source is empty. Argon is used for tank purging, relief valve purging, pneumatic valve actuation, etc.

Dewar change procedure (argon source #1)

1. Close MV-116-Ar.
2. Close the gas use isolation valve on each of the four dewars.
3. Open MV-115-Ar and blow down the manifold to 0 psig as indicated on PI-176-Ar.
4. Close MV-115-Ar.
5. Disconnect all four dewars from the manifold braided flexible hoses.
6. Connect four new dewars to the CGA-580 connection on the braided flexible hoses.
7. Open the gas use valve on one of the four dewars and pressurize the manifold. Snoop all four flexible hose to dewar connections. Close the gas use valve.
8. Blow down the manifold thru MV-115-Ar to a 0 psig.
9. Repeat the pressurizing from the dewar gas use isolation valve and subsequent blow down thru MV-115 five times for each dewar.
10. Open all four dewar gas use valves.
11. Open MV-116-Ar.

Bottle change procedure (argon source #2)

1. Close MV-126-Ar (3-way valve).
2. Close the gas use isolation valve on each of the four bottles.
3. Open MV-118-Ar (3-way valve) to its vent position and blow down the manifold to 0 psig as indicated on PI-181-Ar.
4. Close MV-118-Ar.
5. Disconnect all four bottles from the manifold braided flexible hoses.
6. Connect four new bottles to the CGA-580 connection on the braided flexible hoses.
7. Open the gas use valve on one of the four bottles and pressurize the manifold. Snoop all four flexible hose to bottle connections. Close the bottle gas use valve.
8. Blow down the manifold thru MV-118-Ar to a 0 psig.
9. Repeat the pressurizing from the bottle gas use isolation valve and subsequent blow down thru MV-118 five times for each bottle.
10. Open all four bottle gas use valves.
11. Open MV-126-Ar.

Bottle change procedure (argon source #3)

1. Close MV-137-Ar (3-way valve).
2. Close the gas use isolation valve on each of the four bottles.
3. Open MV-135-Ar (3-way valve) to its vent position and blow down the manifold to 0 psig as indicated on PI-183-Ar.
4. Close MV-135-Ar.
5. Disconnect all four bottles from the manifold braided flexible hoses.
6. Connect four new bottles to the CGA-580 connection on the braided flexible hoses.
7. Open the gas use valve on one of the four bottles and pressurize the manifold. Snoop all four flexible hose to bottle connections. Close the bottle gas use valve.
8. Blow down the manifold thru MV-135-Ar to a 0 psig.
9. Repeat the pressurizing from the bottle gas use isolation valve and subsequent blow down thru MV-135 five times for each bottle.
10. Open all four bottle gas use valves.
11. Open MV-137-Ar.

1 - High purity argon piping preparation procedure

A PPD engineer must be present for all steps of this procedure. This procedure configures the argon purification piping prior to system startup by removing all air from the piping.

1. Lock closed the valves shown in the attached schematic. Lock open MV-483-Ar and attach SP-484-Ar to its outlet. The tank will breathe thru SP-484-Ar to adjust to atmospheric pressure changes.
2. Other system valves should also be configured per the attached schematic. Highlighted valves are to be put in the open position. Valves not highlighted are to remain closed.
3. Open MV-513-Ar, MV-540-Ar, MV-565-Ar, and MV-573-Ar.
4. Close MV-237-Ar.
5. Open MV-152-N2.
6. Flow 500 SCFH as indicated by FI-592-HAr of N2 thru the filters for 15 minutes.
7. Close MV-152-N2.
8. Open MV-154-HAr.
9. Flow 500 SCFH as indicated by FI-592-HAr of H2/Ar thru the filters for 15 minutes.
10. Close MV-154-HAr.
11. Open MV-237-Ar
12. Flow 500 SCFH as indicated by FI-592-HAr of argon thru the filters for 30 minutes.
13. Close MV-513-HAr, MV-565-HAr, MV-540-HAr, and MV-573-HAr.
14. Open MV-486-Ar and MV-339-Ar.
15. Flow 5 SCFM of argon gas thru FCVE-300-Ar for 30 minutes. Control FCVE-300-Ar with the PLC.
16. Close MV-486-Ar and MV-339-Ar.
17. Open MV-608-Ar and MV-609-Ar.
18. Flow 30 SCFH of argon gas thru FCVE-606-Ar for 30 minutes. Control FCVE-606-Ar with the PLC.
19. Close MV-608-Ar and MV-609-Ar.
20. Open MV-472-Ar.
21. Open AV-432-Ar for 10 minutes using the PLC and then close the valve.
22. Close MV-472-Ar.
23. Connect a dry roughing vacuum pump to MV-694-Ar.
24. Open MV-694-Ar and evacuate the yellow highlighted sections of piping.
25. Connect a dry roughing vacuum pump to MV-486-Ar.
26. Open MV-486-Ar and evacuate the yellow highlighted sections of piping.
27. Close MV-486-Ar and MV-694-Ar.
28. Back fill the evacuated piping by opening MV-513-HAr and pressurizing the piping with 5 psig of argon gas as indicated by PI-571-Ar.
29. Repeat steps 23 thru 28 3 times.
30. Proceed to “Oxygen and molecular sieve filter regeneration procedure – prior to system startup.”

1 - High purity argon piping preparation procedure

A PPD engineer must be present for all steps of this procedure. This procedure configures the argon purification piping prior to system startup by removing all air from the piping.

1. Lock closed MV-1005-N2, MV-5001-Ar, and MV-5002-Ar.
2. System valves should be configured per the attached schematic. Highlighted valves are to be put in the open position. Valves not highlighted are to remain closed.
3. Open MV-513-Ar, MV-540-Ar, MV-565-Ar, and MV-573-Ar.
4. Close MV-667-Ar and MV-553-Ar to isolate the filters.
5. Close MV-237-Ar.
6. Open MV-152-N2.
7. Flow 500 SCFH as indicated by FI-592-HAr of N2 thru the filters for 15 minutes.
8. Close MV-152-N2.
9. Open MV-154-HAr.
10. Flow 500 SCFH as indicated by FI-592-HAr of H2/Ar thru the filters for 15 minutes.
11. Close MV-154-HAr.
12. Open MV-237-Ar
13. Flow 500 SCFH as indicated by FCV-592-HAr and 100 SCFH as indicated by FCV-714-HAr of Ar thru the filters for 30 minutes.
14. Close MV-513-HAr, MV-565-HAr, MV-540-HAr, and MV-573-HAr.
15. Open MV-667-Ar and MV-553-Ar.
16. Open MV-486-Ar and MV-339-Ar.
17. Flow 5 SCFM of argon gas thru FCVE-300-Ar for 30 minutes. Control FCVE-300-Ar with the PLC.
18. Close MV-486-Ar and MV-339-Ar.
19. Open MV-608-Ar. Unplug outlet of MV-609-Ar. Open MV-609-Ar.
20. Flow 30 SCFH of argon gas thru FCVE-606-Ar for 30 minutes. Control FCVE-606-Ar with the PLC.
21. Close MV-608-Ar and MV-609-Ar. Plug outlet of MV-609-Ar.
22. Unplug MV-472-Ar and attach a 0-100 SCFH flowmeter. Open MV-472-Ar.
23. Open AV-432-Ar for and adjust the flowmeter to 100 SCFH. Flow 100 SCFH for 10 minutes.
24. Close MV-472-Ar. Remove flowmeter and plug the outlet of MV-472-Ar.
25. Unplug MV-694-Ar and connect a dry roughing vacuum pump to MV-694-Ar.
26. Open MV-694-Ar and evacuate the yellow highlighted sections of piping.
27. Connect a dry roughing vacuum pump to MV-486-Ar.
28. Open MV-486-Ar and evacuate the yellow highlighted sections of piping.
29. Close MV-486-Ar and MV-694-Ar.
30. Back fill the evacuated piping by opening MV-513-HAr and pressurizing the piping with 5 psig of argon gas as indicated by PI-571-Ar.

31. Repeat the pump and back fill 3 times.
32. Disconnect vacuum pumps and plug MV-694-Ar.
33. Proceed to “Oxygen and molecular sieve filter regeneration procedure – prior to system startup.”

REV	DESCRIPTION	DRAWN	DATE
		APPROVED	DATE
M	MISC. REVISIONS MADE.	J.CATALANELLO	22-MAY-2012
F	MISC. REVISIONS MADE.	J.CATALANELLO	26-FEB-2010
		M.ADAMOWSKI	26-FEB-2010
G	MISC. REVISIONS MADE.	J.CATALANELLO	10-JAN-2011
		T.TOPE	12-JAN-2012
H	MISC. REVISIONS MADE.	J.CATALANELLO	10-JAN-2011
		T.TOPE	03-FEB-2011
J	MISC. REVISIONS MADE.	J.CATALANELLO	23-FEB-2011
		T.TOPE	28-FEB-2011
K	MISC. REVISIONS MADE.	J.CATALANELLO	04-MAR-2011
		T.TOPE	22-JUN-2011
L	MISC. REVISIONS MADE.	J.CATALANELLO	11-JUL-2011
		T.TOPE	01-MAR-2012
A	ADDED TAG NUMBERS TO VALVE TYPES	V. MAJDANSKI	25FEB08
		R. SCHMITT	26FEB08
B	MOVE CONDENSOR OUTSIDE TANK	J.CATALANELLO	07-DEC-2008
		R.SCHMITT	10-DEC-2008
C	MISC. REVISIONS MADE.	J.CATALANELLO	23-DEC-2008
		R.SCHMITT	06-JAN-2009
D	MISC. REVISIONS MADE.	J.CATALANELLO	17-NOV-2009
		T.TOPE	14-DEC-2009
E	MISC. REVISIONS MADE.	J.CATALANELLO	17-NOV-2009
		T.TOPE	15-JAN-2010

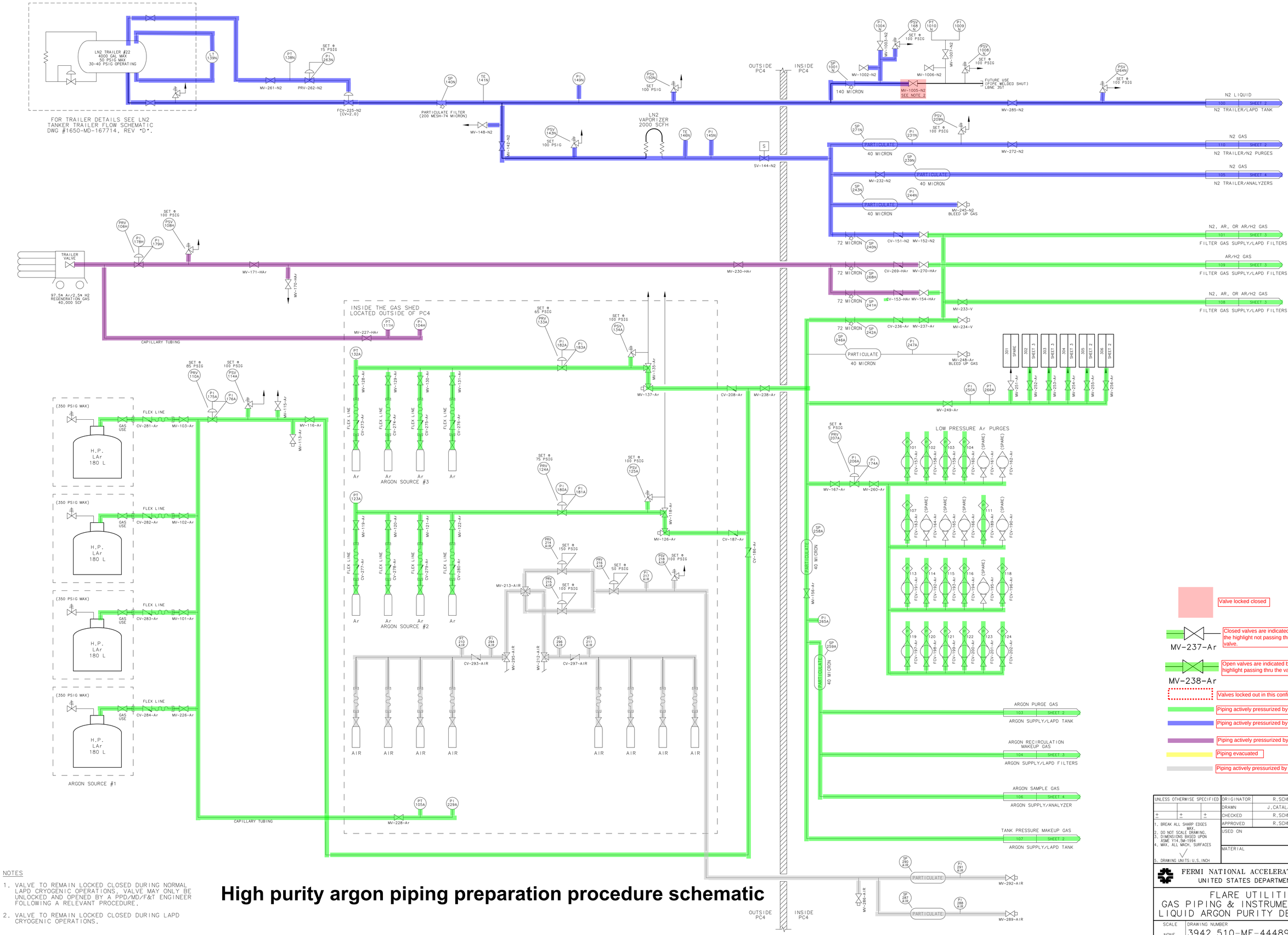

NOTES

1. VALVE TO REMAIN LOCKED CLOSED DURING NORMAL LAPD CRYOGENIC OPERATIONS. VALVE MAY ONLY BE UNLOCKED AND OPENED BY A PPD/MD/F&T ENGINEER FOLLOWING A RELEVANT PROCEDURE.
2. VALVE TO REMAIN LOCKED CLOSED DURING LAPD CRYOGENIC OPERATIONS.

High purity argon piping preparation procedure schematic

UNLESS OTHERWISE SPECIFIED	ORIGINATOR	R.SCHMITT	26-JUN-2007
	DRAWN	J.CATALANELLO	07-DEC-2007
± ± ±	CHECKED	R.SCHMITT	12-DEC-2007
1. BREAK ALL SHARP EDGES MAX.	APPROVED	R.SCHMITT	12-DEC-2007
2. DO NOT SCALE DRAWING. 3. DIMENSIONS BASED UPON ASME Y14.5M-1994 4. MAX. ALL MACH. SURFACES	USED ON		
5. DRAWING UNITS: U.S. INCH	MATERIAL		

FERMI NATIONAL ACCELERATOR LABORATORY
UNITED STATES DEPARTMENT OF ENERGY

FLARE UTILITIES
GAS PIPING & INSTRUMENT DIAGRAM
LIQUID ARGON PURITY DEMONSTRAT'N

SCALE	DRAWING NUMBER	SHEET	REV
NONE	3942.510-ME-444897	1 OF 4	M

CREATED WITH : Ideas12NXSeries | GROUP: PPD/MECHANICAL DEPARTMENT

version 11.13.12 page 7

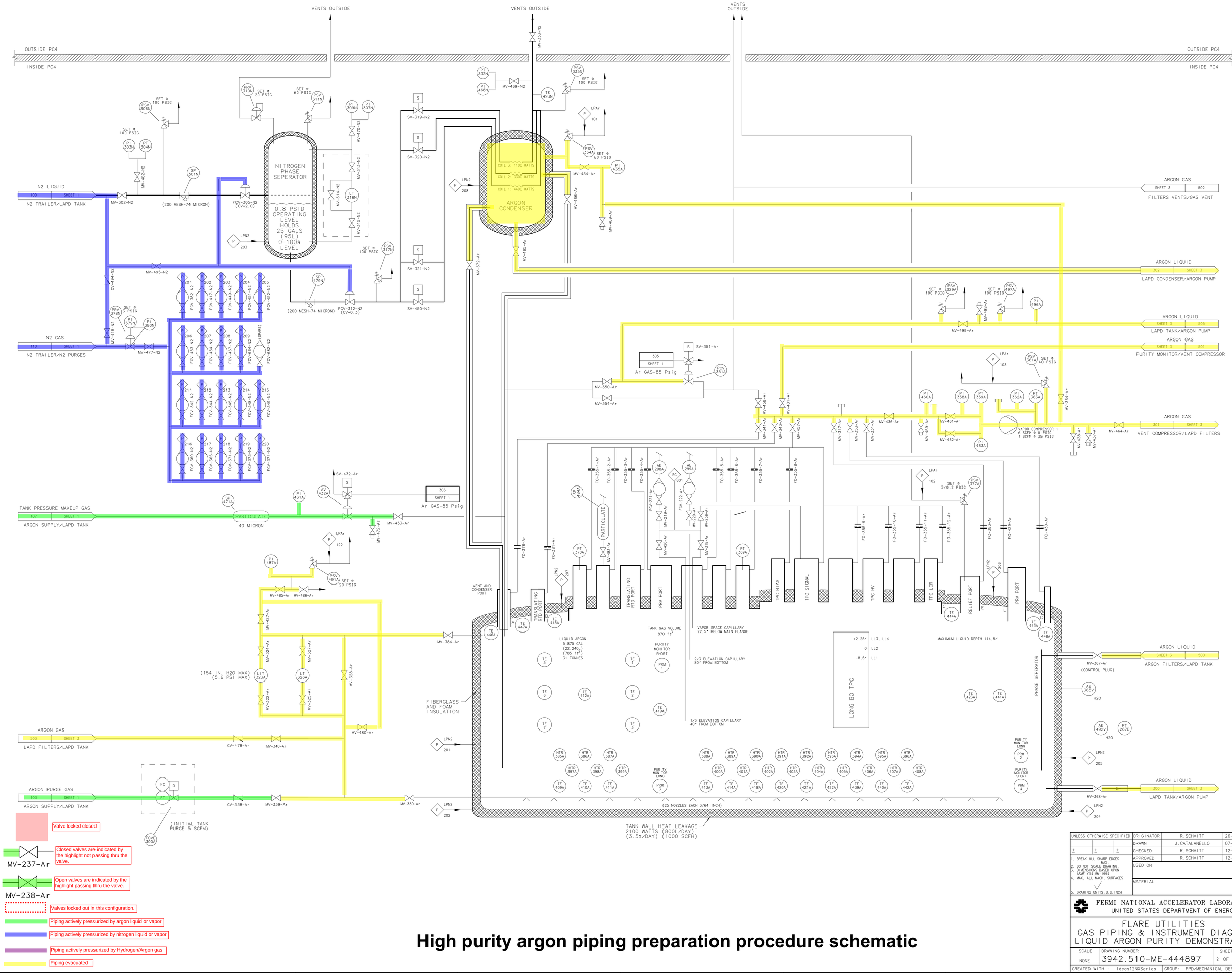

High purity argon piping preparation procedure schematic

UNLESS OTHERWISE SPECIFIED			ORIGINATOR	R.SCHMITT	26-JUN-2007
			DRAWN	J.CATALANELLO	07-DEC-2007
±	±	±	CHECKED	R.SCHMITT	12-DEC-2007
1. BREAK ALL SHARP EDGES MAX. 2. DO NOT SCALE DRAWING. 3. DIMENSIONS BASED UPON ASME Y14.5M-1994 4. MAX. ALL MACH. SURFACES 5. DRAWING UNITS: U.S. INCH			APPROVED	R.SCHMITT	12-DEC-2007
			USED ON		
			MATERIAL		

FERMI NATIONAL ACCELERATOR LABORATORY
UNITED STATES DEPARTMENT OF ENERGY

FLARE UTILITIES
GAS PIPING & INSTRUMENT DIAGRAM
LIQUID ARGON PURITY DEMONSTRAT'N

SCALE	DRAWING NUMBER	SHEET	REV
NONE	3942.510-ME-444897	2 OF 4	M

CREATED WITH : Ideas12NXSeries | GROUP: PPD/MECHANICAL DEPARTMENT

version 11.13.12 page 6

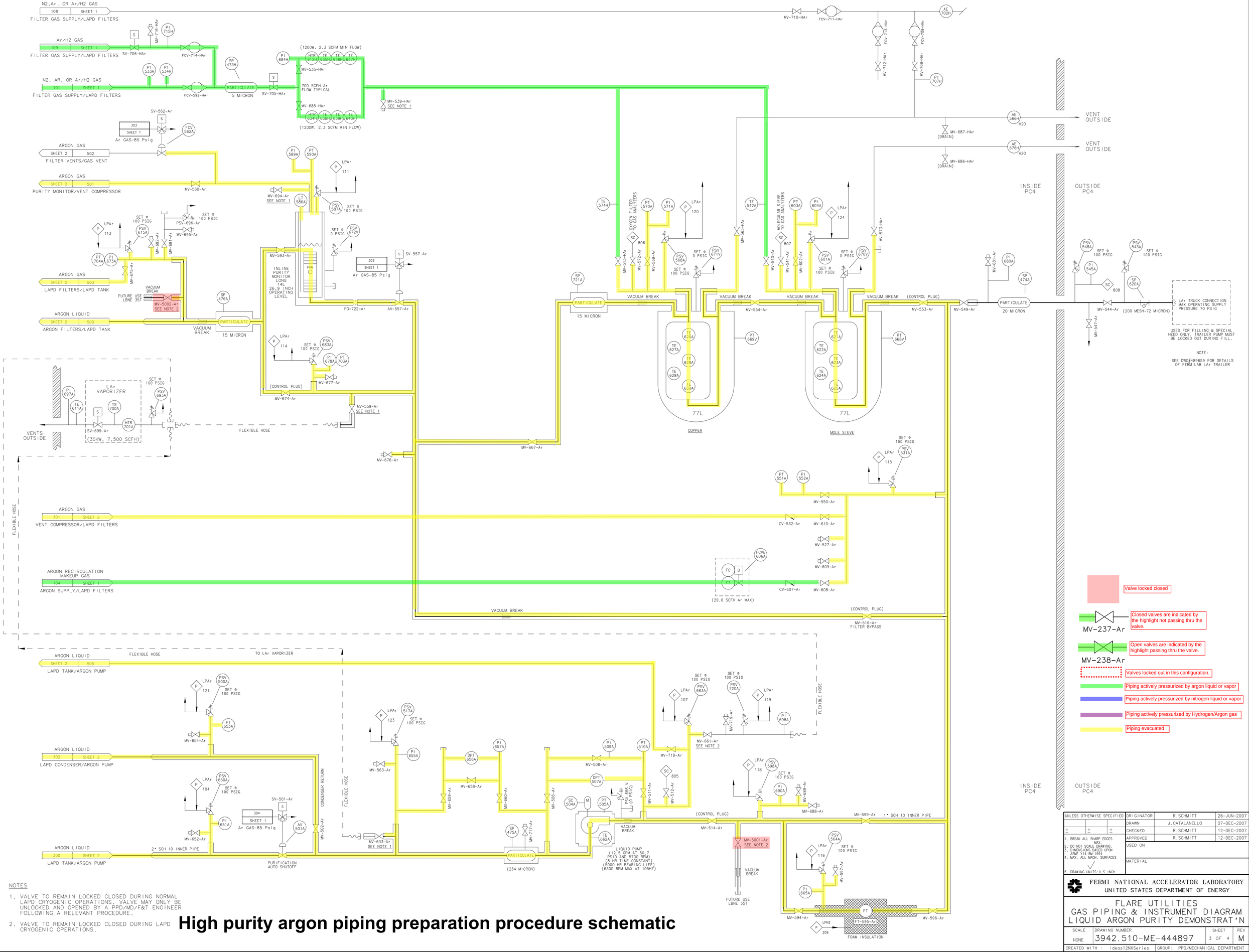

NOTES

1. VALVE TO REMAIN LOCKED CLOSED DURING NORMAL LAPD CRYOGENIC OPERATIONS. VALVE MAY ONLY BE UNLOCKED AND OPENED BY A PPD/MD/F&T ENGINEER FOLLOWING A RELEVANT PROCEDURE.
2. VALVE TO REMAIN LOCKED CLOSED DURING LAPD CRYOGENIC OPERATIONS.

High purity argon piping preparation procedure schematic

UNLESS OTHERWISE SPECIFIED	ORIGINATOR	R.SCHMITT	26-JUN-2007
	DRAWN	J.CATALANELLO	07-DEC-2007
± ± ±	CHECKED	R.SCHMITT	12-DEC-2007
1. BREAK ALL SHARP EDGES MAX.	APPROVED	R.SCHMITT	12-DEC-2007
2. DO NOT SCALE DRAWING. 3. DIMENSIONS BASED UPON ASME Y14.5M-1994 4. MAX. ALL MACH. SURFACES	USED ON		
5. DRAWING UNITS: U.S. INCH	MATERIAL		

FERMI NATIONAL ACCELERATOR LABORATORY
UNITED STATES DEPARTMENT OF ENERGY

FLARE UTILITIES
GAS PIPING & INSTRUMENT DIAGRAM
LIQUID ARGON PURITY DEMONSTRAT'N

SCALE	DRAWING NUMBER	SHEET	REV
NONE	3942.510-ME-444897	3 OF 4	M

CREATED WITH : Ideas12NXSeries | GROUP: PPD/MECHANICAL DEPARTMENT

version 11.13.12 page 9

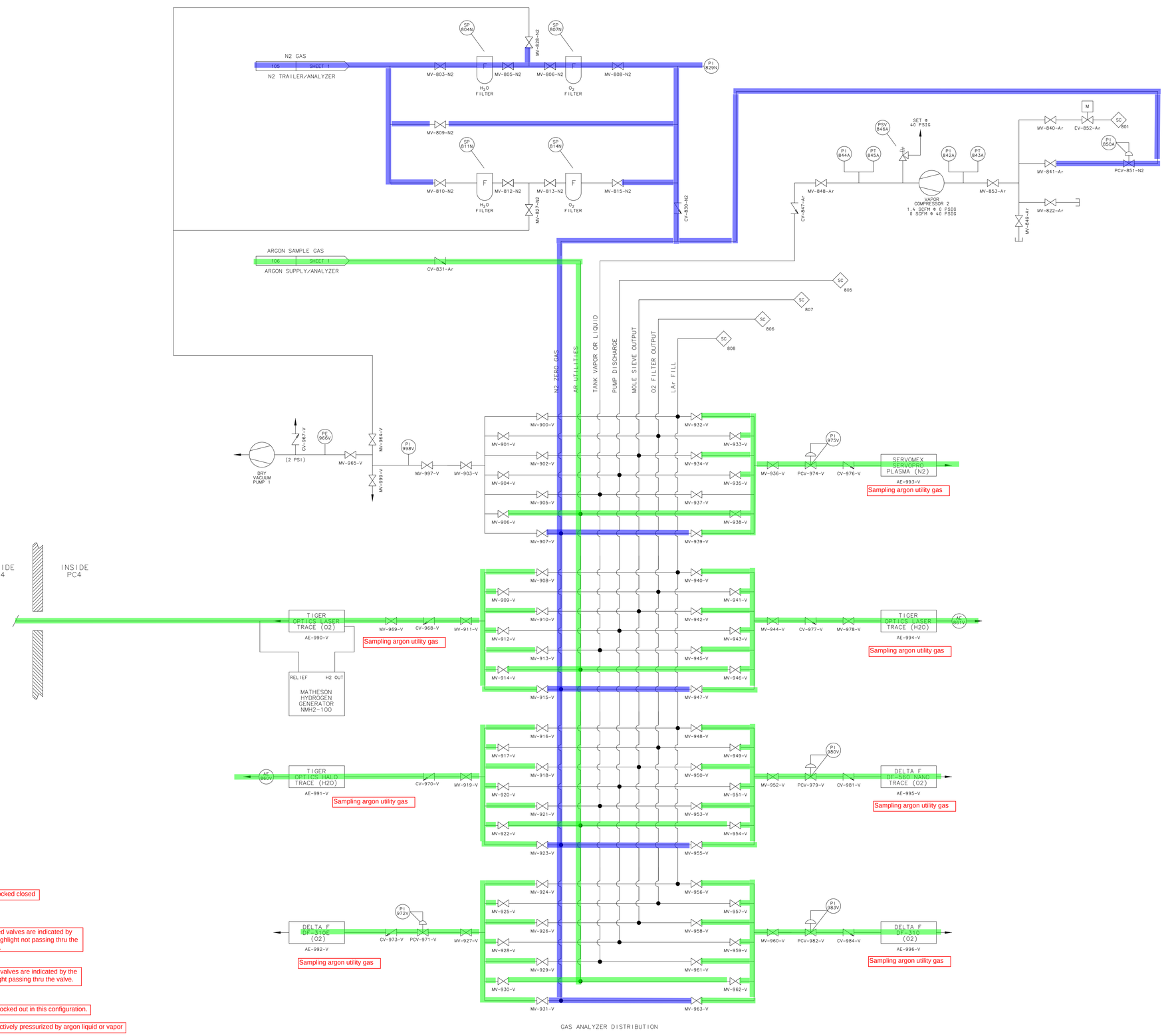

Valve locked closed

MV-237-Ar — Closed valves are indicated by the highlight not passing thru the valve.

MV-238-Ar — Open valves are indicated by the highlight passing thru the valve.

Valves locked out in this configuration.

Piping actively pressurized by argon liquid or vapor

Piping actively pressurized by nitrogen liquid or vapor

Piping actively pressurized by Hydrogen/Argon gas

Piping evacuated

High purity argon piping preparation procedure schematic

UNLESS OTHERWISE SPECIFIED	ORIGINATOR	R.SCHMITT	26-JUN-2007
	DRAWN	J.CATALANELLO	07-DEC-2007
± ± ±	CHECKED	R.SCHMITT	12-DEC-2007
1. BREAK ALL SHARP EDGES MAX. 2. DO NOT SCALE DRAWING. 3. DIMENSIONS BASED UPON ASME Y14.5M-1994 4. MAX. ALL MACH. SURFACES	APPROVED	R.SCHMITT	12-DEC-2007
	USED ON		
5. DRAWING UNITS: U.S.INCH	MATERIAL		

FERMI NATIONAL ACCELERATOR LABORATORY
UNITED STATES DEPARTMENT OF ENERGY

FLARE UTILITIES
GAS PIPING & INSTRUMENT DIAGRAM
LIQUID ARGON PURITY DEMONSTRAT'N

SCALE	DRAWING NUMBER	SHEET	REV
NONE	3942.510-ME-444897	4 OF 4	M

CREATED WITH : Ideas12NXSeries | GROUP: PPD/MECHANICAL DEPARTMENT

version 11.13.12 page 10

Created: 08:12:24 on 18-10-12 (D-M-Y) By: catalan State: 1-INITIAL

2 - Oxygen and molecular sieve filter regeneration procedure – prior to system startup

A PPD engineer must be present for each step of the filter regeneration procedure. The PLC controlled portions may be unattended if PPD has authorized unattended operation and the PPD engineer decides the system is stable. This procedure regenerates the molecular sieve and oxygen filters so that they are at full capacity prior to the startup of the argon purifying system.

1. **Configure the system valves as shown in the attached schematic entitled "Oxygen filter regeneration prior to tank purge procedure schematic."**
2. Open FCV-592-HAr and adjust to 500 SCFH.
3. Turn on the oxygen filter regeneration heater PLC control loop. Make the heater set points 150 C and heater power limit 50%. Wait for the filter bed temperatures to stabilize. This may take several hours.
4. Slowly open FCV-714-HAr and adjust the flow of 2.5%H2 / 97.5%Ar to 10 SCFH. Watch for filter bed self-heating at all subsequent steps. If self heating occurs then pause until conditions stabilize. Reduce H2/Ar flow if its necessary to reduce self heating in this step or subsequent steps.
5. After 1 hour, increase the flow of H2 / Ar to 30 SCFH as indicated by FCV-714-HAr.
6. After 1 hour, increase the flow of H2 / Ar to 60 SCFH as indicated by FCV-714-HAr.
7. After 1 hour, increase the flow of H2 / Ar to 100 SCFH as indicated by FCV-714-HAr.
8. After 1 hour, increase the heater set points to 175 C and heater power limit to 75%.
9. After 1 hour, increase the heater set points to 200 C and heater power limit to 100%.
10. After 1 hour, increase the heater set points to 225 C.
11. After 1 hour, increase the heater set points to 250 C.
12. Allow bed temperatures to stabilize. Once the bed temperatures are stable, oxygen filter regeneration is complete when AE-566-Ar reaches an asymptotic low.
13. After the oxygen filter regeneration is complete turn off the gas heaters using the PLC.
14. Close both FCV-592-HAr and FCV-714-HAr.
15. Close MV-565-HAr.
16. Close MV-535-HAr and MV-685-HAr.
17. Close MV-270-HAr.
18. Connect a turbo vacuum cart to MV-539-HAr.
19. Open MV-539-HAr and vacuum pump on the oxygen filter while it cools to room temperature.
20. Close MV-539-HAr and disconnect the turbo vacuum cart.

21. Turn on “Dry Vacuum Pump 1” and measure the base vacuum using PE-996-V. When the base vacuum is less then 100 microns proceed to the next step.
22. Open MV-965-V, MV-997-V, MV-903-V, MV-901-V and evacuate to 100 microns as indicated by PE-996-V.
23. Close MV-965-V.
24. Open MV-906-V and back fill the oxygen filter with argon utility gas to 15 psig. Modulate the flow using MV-901-V to keep the pressure indicated by PI-998-V positive.
25. Close MV-906-V, MV-997-V, MV-903-V, MV-901-V.
26. **Configure the system valves as shown in the attached schematic entitled “Molecular sieve filter regeneration prior to tank purge schematic**.”
27. Open FCV-592-HAr and adjust flow 500 SCFH.
28. Turn on the molecular sieve filter regeneration heater PLC control loop. Make the heater set points 250 C and heater power limit 100%. Wait for the filter bed temperatures to stabilize. This may take several hours.
29. Molecular sieve filter regeneration is complete when AE-576-Ar reaches an asymptotic low.
30. After the molecular sieve filter regeneration is complete turn off the gas heaters using the PLC.
31. Close FCV-592-HAr.
32. Close MV-573-HAr.
33. Close MV-535-HAr and MV-685-HAr.
34. Connect a turbo vacuum cart to MV-539-HAr.
35. Open MV-539-HAr and vacuum pump the molecular sieve filter while it cools to room temperature.
36. Close MV-539-HAr and disconnect the turbo vacuum cart.
37. Turn on “Dry Vacuum Pump 1” and measure the base vacuum using PE-996-V. When the base vacuum is less then 100 microns proceed to the next step.
38. Open MV-965-V, MV-997-V, MV-903-V, MV-902-V and evacuate to 100 microns as indicated by PE-996-V.
39. Close MV-965-V.
40. Open MV-906-V and back fill the oxygen filter with argon utility gas to 15 psig. Modulate the flow using MV-902-V to keep the pressure indicated by PI-998-V positive.
41. Close MV-906-V, MV-997-V, MV-903-V, MV-902-V
42. Proceed to “Tank configuration prior to system startup procedure”.

REV	DESCRIPTION	DRAWN	DATE
		APPROVED	DATE
M	MISC. REVISIONS MADE.	J.CATALANELLO	22-MAY-2012
F	MISC. REVISIONS MADE.	J.CATALANELLO	26-FEB-2010
		M.ADAMOWSKI	26-FEB-2010
G	MISC. REVISIONS MADE.	J.CATALANELLO	10-JAN-2011
		T.TOPE	12-JAN-2012
H	MISC. REVISIONS MADE.	J.CATALANELLO	10-JAN-2011
		T.TOPE	03-FEB-2011
J	MISC. REVISIONS MADE.	J.CATALANELLO	23-FEB-2011
		T.TOPE	28-FEB-2011
K	MISC. REVISIONS MADE.	J.CATALANELLO	04-MAR-2011
		T.TOPE	22-JUN-2011
L	MISC. REVISIONS MADE.	J.CATALANELLO	11-JUL-2011
		T.TOPE	01-MAR-2012
A	ADDED TAG NUMBERS TO VALVE TYPES	V. MAJDANSKI	25FEB08
		R. SCHMITT	26FEB08
B	MOVE CONDENSOR OUTSIDE TANK	J.CATALANELLO	07-DEC-2008
		R.SCHMITT	10-DEC-2008
C	MISC. REVISIONS MADE.	J.CATALANELLO	23-DEC-2008
		R.SCHMITT	06-JAN-2009
D	MISC. REVISIONS MADE.	J.CATALANELLO	17-NOV-2009
		T.TOPE	14-DEC-2009
E	MISC. REVISIONS MADE.	J.CATALANELLO	17-NOV-2009
		T.TOPE	15-JAN-2010

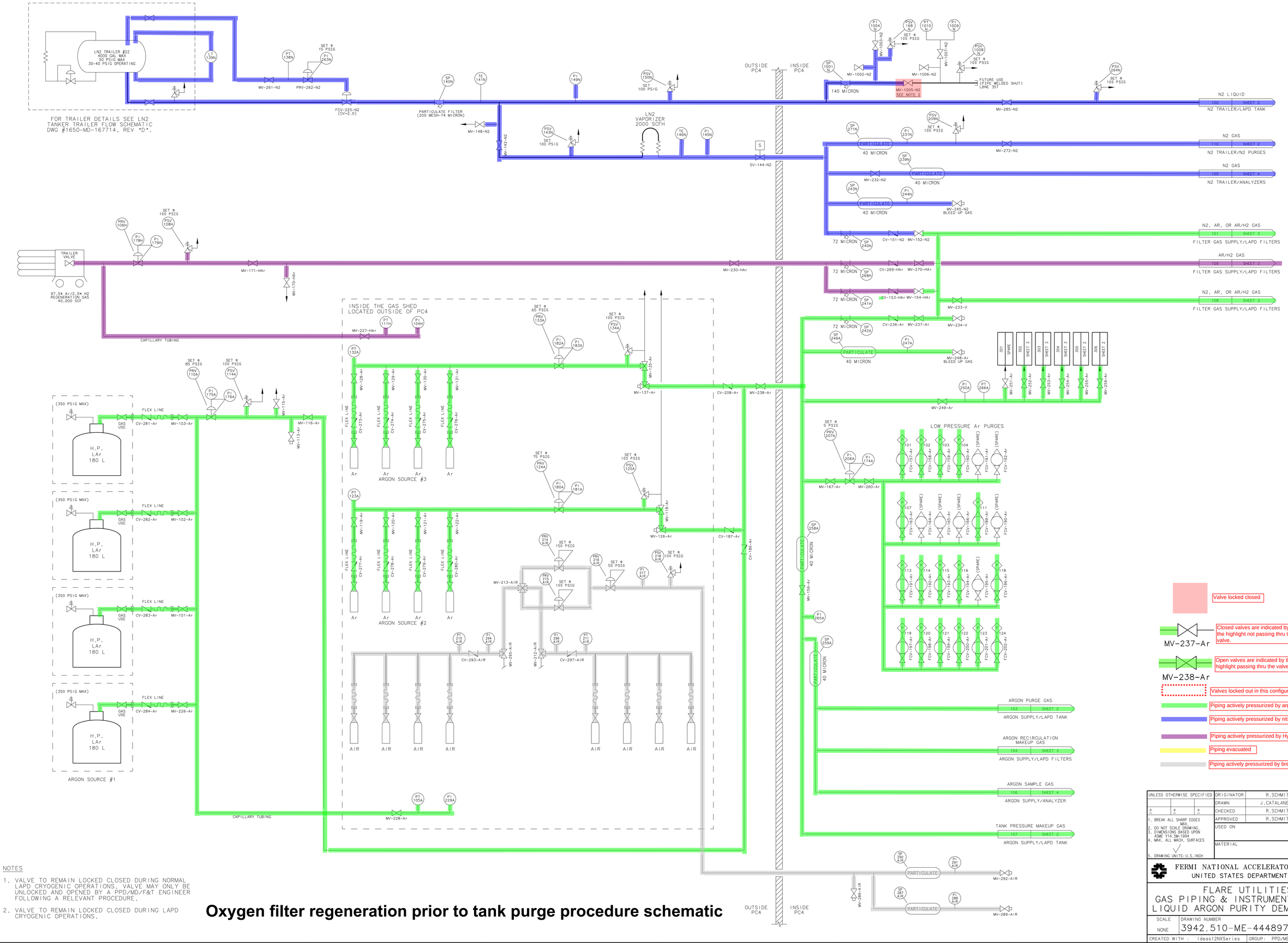

Valve locked closed

MV-237-Ar — Closed valves are indicated by the highlight not passing thru the valve.

MV-238-Ar — Open valves are indicated by the highlight passing thru the valve.

Valves locked out in this configuration.

Piping actively pressurized by argon liquid or vapor

Piping actively pressurized by nitrogen liquid or vapor

Piping actively pressurized by Hydrogen/Argon gas

Piping evacuated

Piping actively pressurized by breathable air

NOTES

1. VALVE TO REMAIN LOCKED CLOSED DURING NORMAL LAPD CRYOGENIC OPERATIONS. VALVE MAY ONLY BE UNLOCKED AND OPENED BY A PPD/MD/F&T ENGINEER FOLLOWING A RELEVANT PROCEDURE.
2. VALVE TO REMAIN LOCKED CLOSED DURING LAPD CRYOGENIC OPERATIONS.

Oxygen filter regeneration prior to tank purge procedure schematic

UNLESS OTHERWISE SPECIFIED:	ORIGINATOR	R.SCHMITT	26-JUN-2007
	DRAWN	J.CATALANELLO	07-DEC-2007
± ± ±	CHECKED	R.SCHMITT	12-DEC-2007
1. BREAK ALL SHARP EDGES MAX.	APPROVED	R.SCHMITT	12-DEC-2007
2. DO NOT SCALE DRAWING. 3. DIMENSIONS BASED UPON ASME Y14.5M-1994 4. MAX. ALL MACH. SURFACES	USED ON		
5. DRAWING UNITS: U.S. INCH	MATERIAL		

FERMI NATIONAL ACCELERATOR LABORATORY
UNITED STATES DEPARTMENT OF ENERGY

FLARE UTILITIES
GAS PIPING & INSTRUMENT DIAGRAM
LIQUID ARGON PURITY DEMONSTRAT'N

SCALE	DRAWING NUMBER	SHEET	REV
NONE	3942.510-ME-444897	1 OF 4	M

CREATED WITH : Ideas12NXSeries | GROUP: PPD/MECHANICAL DEPARTMENT

Oxygen filter regeneration prior to tank purge procedure schematic

VENTS OUTSIDE

OUTSIDE PC4

INSIDE PC4

NITROGEN PHASE SEPERATOR

0.8 PSID OPERATING LEVEL HOLDS 25 GALS (95L) 0-100% LEVEL

ARGON CONDENSER

COIL 3: 1100 WATTS

COIL 2: 3300 WATTS

COIL 1: 4400 WATTS

N2 LIQUID — 100 SHEET 1 — N2 TRAILER/LAPD TANK

N2 GAS — 110 SHEET 1 — N2 TRAILER/N2 PURGES

TANK PRESSURE MAKEUP GAS — 107 SHEET 1 — ARGON SUPPLY/LAPD TANK

ARGON PURGE GAS — 103 SHEET 1 — ARGON SUPPLY/LAPD TANK

ARGON GAS — 503 SHEET 3 — LAPD FILTERS/LAPD TANK

ARGON GAS — SHEET 3 502 — FILTERS VENTS/GAS VENT

ARGON LIQUID — 302 SHEET 3 — LAPD CONDENSER/ARGON PUMP

ARGON LIQUID — SHEET 3 505 — LAPD TANK/ARGON PUMP

ARGON GAS — SHEET 3 501 — PURITY MONITOR/VENT COMPRESSOR

ARGON GAS — 301 SHEET 3 — VENT COMPRESSOR/LAPD FILTERS

ARGON LIQUID — SHEET 3 500 — ARGON FILTERS/LAPD TANK

ARGON LIQUID — 300 SHEET 3 — LAPD TANK/ARGON PUMP

305 SHEET 1 — Ar GAS-85 Psig

306 SHEET 1 — Ar GAS-85 Psig

PARTICULATE 40 MICRON

VAPOR COMPRESSOR 1
6 SCFM @ 0 PSIG
1 SCFM @ 35 PSIG

(200 MESH-74 MICRON)

(25 NOZZLES EACH 3/64 INCH)

(154 IN. H2O MAX) (5.6 PSI MAX)

(INITIAL TANK PURGE 5 SCFM)

FIBERGLASS AND FOAM INSULATION

TANK WALL HEAT LEAKAGE
2100 WATTS (800L/DAY)
(3.5%/DAY) (1000 SCFH)

LIQUID ARGON
5,875 GAL
(22,240L)
(785 ft³)
31 TONNES

TANK GAS VOLUME
870 ft³

VAPOR SPACE CAPILLARY
22.5° BELOW MAIN FLANGE

2/3 ELEVATION CAPILLARY
80° FROM BOTTOM

1/3 ELEVATION CAPILLARY
40° FROM BOTTOM

+2.25° LL3, LL4
0 LL2
-8.5° LL1
LONG 80 TPC

MAXIMUM LIQUID DEPTH 114.5°

VENT AND CONDENSER PORT

TRANSLATING ROD

TRANSLATING RTD PORT

PRM PORT

TPC BIAS

TPC SIGNAL

TPC HV

TPC LCR

RELIEF PORT

PRM PORT

PHASE SEPERATOR

Valve locked closed

Closed valves are indicated by the highlight not passing thru the valve.

MV-237-Ar

Open valves are indicated by the highlight passing thru the valve.

MV-238-Ar

Valves locked out in this configuration.

Piping actively pressurized by argon liquid or vapor

Piping actively pressurized by nitrogen liquid or vapor

Piping actively pressurized by Hydrogen/Argon gas

Piping evacuated

UNLESS OTHERWISE SPECIFIED			ORIGINATOR	R.SCHMITT	26-JUN-2007
			DRAWN	J.CATALANELLO	07-DEC-2007
±	±	±	CHECKED	R.SCHMITT	12-DEC-2007
1. BREAK ALL SHARP EDGES MAX.			APPROVED	R.SCHMITT	12-DEC-2007
2. DO NOT SCALE DRAWING. 3. DIMENSIONS BASED UPON ASME Y14.5M-1994 4. MAX. ALL MACH. SURFACES			USED ON		
5. DRAWING UNITS: U.S. INCH			MATERIAL		

FERMI NATIONAL ACCELERATOR LABORATORY
UNITED STATES DEPARTMENT OF ENERGY

FLARE UTILITIES
GAS PIPING & INSTRUMENT DIAGRAM
LIQUID ARGON PURITY DEMONSTRAT'N

SCALE	DRAWING NUMBER	SHEET	REV
NONE	3942.510-ME-444897	2 OF 4	M

CREATED WITH : Ideas12NXSeries | GROUP: PPD/MECHANICAL DEPARTMENT

version 11.13.12 page 14

Created: 08:12:10 on 18-10-12 (D-M-Y) By: catalan State: 1-INITIAL

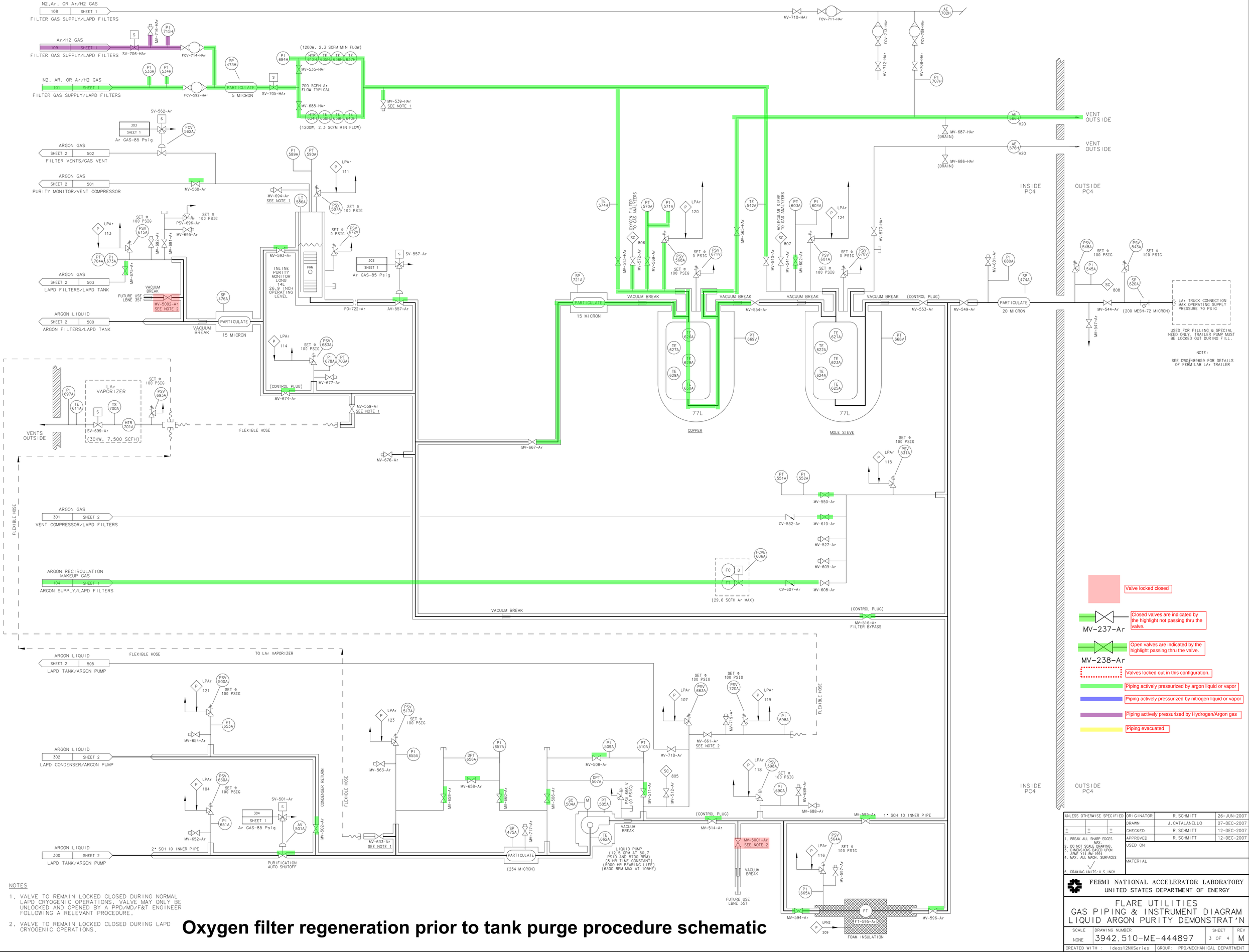

NOTES

1. VALVE TO REMAIN LOCKED CLOSED DURING NORMAL LAPD CRYOGENIC OPERATIONS. VALVE MAY ONLY BE UNLOCKED AND OPENED BY A PPD/MD/F&T ENGINEER FOLLOWING A RELEVANT PROCEDURE.
2. VALVE TO REMAIN LOCKED CLOSED DURING LAPD CRYOGENIC OPERATIONS.

Oxygen filter regeneration prior to tank purge procedure schematic

UNLESS OTHERWISE SPECIFIED	ORIGINATOR	R.SCHMITT	26-JUN-2007
	DRAWN	J.CATALANELLO	07-DEC-2007
± ± ±	CHECKED	R.SCHMITT	12-DEC-2007
1. BREAK ALL SHARP EDGES MAX.	APPROVED	R.SCHMITT	12-DEC-2007
2. DO NOT SCALE DRAWING. 3. DIMENSIONS BASED UPON ASME Y14.5M-1994 4. MAX. ALL MACH. SURFACES	USED ON		
5. DRAWING UNITS: U.S. INCH	MATERIAL		

FERMI NATIONAL ACCELERATOR LABORATORY
UNITED STATES DEPARTMENT OF ENERGY

FLARE UTILITIES
GAS PIPING & INSTRUMENT DIAGRAM
LIQUID ARGON PURITY DEMONSTRAT'N

SCALE	DRAWING NUMBER	SHEET	REV
NONE	3942.510-ME-444897	3 OF 4	M

CREATED WITH : Ideas12NXSeries | GROUP: PPD/MECHANICAL DEPARTMENT

version 11.13.12 page 15

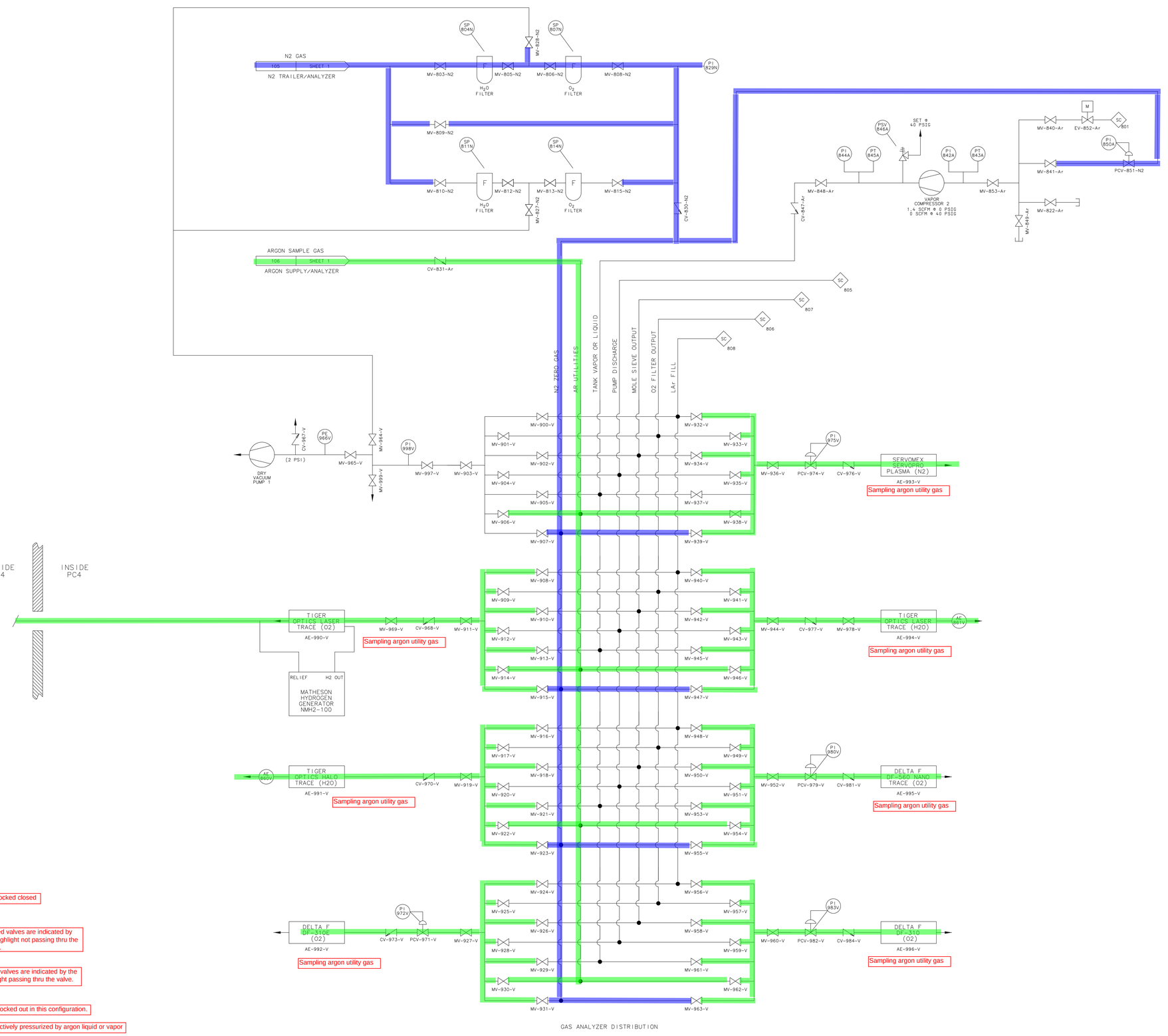

Valve locked closed

MV-237-Ar — Closed valves are indicated by the highlight not passing thru the valve.

MV-238-Ar — Open valves are indicated by the highlight passing thru the valve.

Valves locked out in this configuration.

Piping actively pressurized by argon liquid or vapor

Piping actively pressurized by nitrogen liquid or vapor

Piping actively pressurized by Hydrogen/Argon gas

Piping evacuated

Oxygen filter regeneration prior to tank purge procedure schematic

UNLESS OTHERWISE SPECIFIED	ORIGINATOR	R.SCHMITT	26-JUN-2007
	DRAWN	J.CATALANELLO	07-DEC-2007
± ± ±	CHECKED	R.SCHMITT	12-DEC-2007
1. BREAK ALL SHARP EDGES MAX. 2. DO NOT SCALE DRAWING. 3. DIMENSIONS BASED UPON ASME Y14.5M-1994 4. MAX. ALL MACH. SURFACES 5. DRAWING UNITS: U.S. INCH	APPROVED	R.SCHMITT	12-DEC-2007
	USED ON		
	MATERIAL		

FERMI NATIONAL ACCELERATOR LABORATORY
UNITED STATES DEPARTMENT OF ENERGY

FLARE UTILITIES
GAS PIPING & INSTRUMENT DIAGRAM
LIQUID ARGON PURITY DEMONSTRAT'N

SCALE	DRAWING NUMBER	SHEET	REV
NONE	3942.510-ME-444897	4 OF 4	M

CREATED WITH : Ideas12NXSeries | GROUP: PPD/MECHANICAL DEPARTMENT

version 11.13.12 page 16

Created: 08:12:24 on 18-10-12 (D-M-Y) By: catalan State: 1-INITIAL

REV	DESCRIPTION	DRAWN	DATE
M	MISC. REVISIONS MADE.	J.CATALANELLO	22-MAY-2012
F	MISC. REVISIONS MADE.	J.CATALANELLO	26-FEB-2010
		M.ADAMOWSKI	26-FEB-2010
G	MISC. REVISIONS MADE.	J.CATALANELLO	10-JAN-2011
		T.TOPE	12-JAN-2012
H	MISC. REVISIONS MADE.	J.CATALANELLO	10-JAN-2011
		T.TOPE	03-FEB-2011
J	MISC. REVISIONS MADE.	J.CATALANELLO	23-FEB-2011
		T.TOPE	28-FEB-2011
K	MISC. REVISIONS MADE.	J.CATALANELLO	04-MAR-2011
		T.TOPE	22-JUN-2011
L	MISC. REVISIONS MADE.	J.CATALANELLO	11-JUL-2011
		T.TOPE	01-MAR-2012
A	ADDED TAG NUMBERS TO VALVE TYPES	V. MAJDANSKI	25FEB08
		R. SCHMITT	26FEB08
B	MOVE CONDENSOR OUTSIDE TANK	J.CATALANELLO	07-DEC-2008
		R.SCHMITT	10-DEC-2008
C	MISC. REVISIONS MADE.	J.CATALANELLO	23-DEC-2008
		R.SCHMITT	06-JAN-2009
D	MISC. REVISIONS MADE.	J.CATALANELLO	17-NOV-2009
		T.TOPE	14-DEC-2009
E	MISC. REVISIONS MADE.	J.CATALANELLO	17-NOV-2009
		T.TOPE	15-JAN-2010

LN2 TRAILER #22
4000 GAL MAX
50 PSIG MAX
30-40 PSIG OPERATING

FOR TRAILER DETAILS SEE LN2 TANKER TRAILER FLOW SCHEMATIC DWG #1650-MD-167714, REV "D".

LN2 VAPORIZER 2000 SCFH

OUTSIDE PC4 / INSIDE PC4

FUTURE USE (PIPE WELDED SHUT) LBNE 35T

N2 LIQUID 100 SHEET 2 — N2 TRAILER/LAPD TANK

N2 GAS 110 SHEET 2 — N2 TRAILER/N2 PURGES

N2 GAS 105 SHEET 4 — N2 TRAILER/ANALYZERS

N2, AR, OR AR/H2 GAS 101 SHEET 3 — FILTER GAS SUPPLY/LAPD FILTERS

AR/H2 GAS 109 SHEET 3 — FILTER GAS SUPPLY/LAPD FILTERS

N2, AR, OR AR/H2 GAS 108 SHEET 3 — FILTER GAS SUPPLY/LAPD FILTERS

97.5% Ar/2.5% H2 REGENERATION GAS 40,000 SCF

CAPILLARY TUBING

INSIDE THE GAS SHED LOCATED OUTSIDE OF PC4

ARGON SOURCE #3

ARGON SOURCE #2

ARGON SOURCE #1

(350 PSIG MAX) H.P. LAr 180 L

LOW PRESSURE Ar PURGES

ARGON PURGE GAS 103 SHEET 2 — ARGON SUPPLY/LAPD TANK

ARGON RECIRCULATION MAKEUP GAS 104 SHEET 3 — ARGON SUPPLY/LAPD FILTERS

ARGON SAMPLE GAS 106 SHEET 4 — ARGON SUPPLY/ANALYZER

TANK PRESSURE MAKEUP GAS 107 SHEET 2 — ARGON SUPPLY/LAPD TANK

Valve locked closed

MV-237-Ar — Closed valves are indicated by the highlight not passing thru the valve.

MV-238-Ar — Open valves are indicated by the highlight passing thru the valve.

Valves locked out in this configuration.

Piping actively pressurized by argon liquid or vapor

Piping actively pressurized by nitrogen liquid or vapor

Piping actively pressurized by Hydrogen/Argon gas

Piping evacuated

Piping actively pressurized by breathable air

NOTES

1. VALVE TO REMAIN LOCKED CLOSED DURING NORMAL LAPD CRYOGENIC OPERATIONS. VALVE MAY ONLY BE UNLOCKED AND OPENED BY A PPD/MD/F&T ENGINEER FOLLOWING A RELEVANT PROCEDURE.
2. VALVE TO REMAIN LOCKED CLOSED DURING LAPD CRYOGENIC OPERATIONS.

Molecular sieve filter regeneration prior to tank purge procedure schematic

UNLESS OTHERWISE SPECIFIED	ORIGINATOR	R.SCHMITT	26-JUN-2007
	DRAWN	J.CATALANELLO	07-DEC-2007
± ± ±	CHECKED	R.SCHMITT	12-DEC-2007
1. BREAK ALL SHARP EDGES MAX.	APPROVED	R.SCHMITT	12-DEC-2007
2. DO NOT SCALE DRAWING. 3. DIMENSIONS BASED UPON ASME Y14.5M-1994 4. MAX. ALL MACH. SURFACES	USED ON		
5. DRAWING UNITS: U.S. INCH	MATERIAL		

FERMI NATIONAL ACCELERATOR LABORATORY
UNITED STATES DEPARTMENT OF ENERGY

FLARE UTILITIES
GAS PIPING & INSTRUMENT DIAGRAM
LIQUID ARGON PURITY DEMONSTRAT'N

SCALE	DRAWING NUMBER	SHEET	REV
NONE	3942.510-ME-444897	1 OF 4	M

CREATED WITH : Ideas12NXSeries | GROUP: PPD/MECHANICAL DEPARTMENT

Molecular sieve filter regeneration prior to tank purge procedure schematic

VENTS OUTSIDE

OUTSIDE PC4

INSIDE PC4

N2 LIQUID — 100 — SHEET 1 — N2 TRAILER/LAPD TANK

MV-302-N2

(200 MESH-74 MICRON)

FCV-305-N2 (CV=2.0)

NITROGEN PHASE SEPERATOR

0.8 PSID OPERATING LEVEL HOLDS 25 GALS (95L) 0-100% LEVEL

MV-470-N2

MV-313-N2

MV-314-N2

LT 316N

MV-315-N2

SV-319-N2

SV-320-N2

SV-321-N2

SV-450-N2

PT 332N

PI 468N

MV-469-N2

TE 493N

MV-333-N2

PSV 335N — SET @ 100 PSIG

LPAr P 101

PSV 334A — SET @ 60 PSIG

PI 435A

MV-434-Ar

MV-466-Ar

MV-489-Ar

MV-465-Ar

ARGON CONDENSER

COIL 3: 1100 WATTS

COIL 2: 3300 WATTS

COIL 1: 4400 WATTS

LPN2 P 208

MV-372-Ar

ARGON GAS — SHEET 3 — 502 — FILTERS VENTS/GAS VENT

ARGON LIQUID — 302 — SHEET 3 — LAPD CONDENSER/ARGON PUMP

PSV 329A — SET @ 100 PSIG

PSV 497A — SET @ 100 PSIG

PI 496A

MV-498-Ar

MV-499-Ar

ARGON LIQUID — SHEET 3 — 505 — LAPD TANK/ARGON PUMP

ARGON GAS — SHEET 3 — 501 — PURITY MONITOR/VENT COMPRESSOR

LPAr P 103

PSV 361A — SET @ 40 PSIG

PI 460A, PI 358A, PT 359A, PI 362A, PT 363A

MV-364-Ar

MV-461-Ar

MV-462-Ar

MV-459-Ar

PI 463A

VAPOR COMPRESSOR 1
6 SCFM @ 0 PSIG
1 SCFM @ 35 PSIG

MV-436-Ar

MV-464-Ar

ARGON GAS — 301 — SHEET 3 — VENT COMPRESSOR/LAPD FILTERS

MV-458-Ar, MV-460-Ar, MV-341-Ar, MV-342-Ar, MV-457-Ar, MV-347-Ar, MV-353-Ar, MV-311-Ar, MV-438-Ar, MV-437-Ar

SV-351-Ar

305 — SHEET 1 — Ar GAS-85 Psig

PCV 351A

MV-350-Ar

MV-354-Ar

SV-432-Ar

306 — SHEET 1 — Ar GAS-85 Psig

TANK PRESSURE MAKEUP GAS — 107 — SHEET 1 — ARGON SUPPLY/LAPD TANK

SP 471A

PARTICULATE 40 MICRON

PI 431A

AV 432A

MV-433-Ar

MV-472-Ar

LPAr P 122

PI 487A

PSV 491A — SET @ 20 PSIG

MV-485-Ar MV-486-Ar

PRV 310N — SET @ 20 PSIG

PSV 306N — SET @ 100 PSIG

PI 303N, PT 304N — SET @ 100 PSIG

MV-482-N2

SP 301N

SET @ 60 PSIG — PSV 311N

PI 309N, PT 307N

MV-495-N2

CV-494-N2

MV-415-N2

PRV 378N — SET @ 5 PSIG

PI 379N, PI 380N

MV-477-N2

N2 GAS — 110 — SHEET 1 — N2 TRAILER/N2 PURGES

201 FCV-382-N2, 202 FCV-417-N2, 203 FCV-449-N2, 204 FCV-451-N2, 205 FCV-452-N2

206 FCV-453-N2, 207 FCV-454-N2, 208 FCV-467-N2, 209 FCV-664-N2, (SPARE) FCV-682-N2

211 FCV-342-N2, 212 FCV-344-N2, 213 FCV-345-N2, 214 FCV-348-N2, 215 FCV-349-N2

216 FCV-360-N2, 217 FCV-366-N2, 218 FCV-371-N2, 219 FCV-373-N2, 220 FCV-374-N2

SP 479N

(200 MESH-74 MICRON)

FCV-312-N2 (CV=0.3)

SET @ 100 PSIG — PSV 317N

LPN2 P 203

MV-384-Ar

MV-480-Ar

(154 IN. H2O MAX) (5.6 PSI MAX)

LIT 323A, LT 326A

MV-322-Ar, MV-324-Ar, MV-325-Ar, MV-327-Ar, MV-328-Ar

MV-427-Ar

ARGON GAS — 503 — SHEET 3 — LAPD FILTERS/LAPD TANK

CV-478-Ar

MV-340-Ar

ARGON PURGE GAS — 103 — SHEET 1 — ARGON SUPPLY/LAPD TANK

FC, D, FT

CV-338-Ar

MV-339-Ar

(INITIAL TANK PURGE 5 SCFM)

FCVE 300A

MV-330-Ar

LPN2 P 202

LPN2 P 201

(25 NOZZLES EACH 3/64 INCH)

TANK WALL HEAT LEAKAGE
2100 WATTS (800L/DAY)
(3.5%/DAY) (1000 SCFH)

FIBERGLASS AND FOAM INSULATION

VENT AND CONDENSER PORT

TRANSLATING ROD IN

TRANSLATING RTD PORT

PRM PORT

TANK GAS VOLUME 870 ft³

VAPOR SPACE CAPILLARY 22.5° BELOW MAIN FLANGE

2/3 ELEVATION CAPILLARY 80° FROM BOTTOM

1/3 ELEVATION CAPILLARY 40° FROM BOTTOM

LIQUID ARGON 5,875 GAL (22,240L) (785 ft³) 31 TONNES

PURITY MONITOR SHORT — PRM 1

PURITY MONITOR LONG — PRM 3

PURITY MONITOR LONG — PRM 2

PURITY MONITOR SHORT — PRM 4

TE 5, TE 6, TE 7, TE 1, TE 2, TE 3, TE 419A, TE 412A, TE 409A, TE 410A, TE 411A, TE 413A, TE 414A, TE 418A, TE 420A, TE 421A, TE 422A, TE 439A, TE 440A, TE 442A, TE 423A, TE 441A

HTR 385A, HTR 386A, HTR 387A, HTR 397A, HTR 398A, HTR 399A, HTR 388A, HTR 389A, HTR 390A, HTR 391A, HTR 392A, HTR 393A, HTR 394A, HTR 395A, HTR 396A, HTR 400A, HTR 401A, HTR 402A, HTR 403A, HTR 404A, HTR 405A, HTR 406A, HTR 407A, HTR 408A

LONG BO TPC

+2.25" LL3, LL4
0 LL2
-8.5" LL1

MAXIMUM LIQUID DEPTH 114.5"

TPC BIAS, TPC SIGNAL, TPC HV, TPC LCR, RELIEF PORT, PRM PORT

PHASE SEPERATOR

TE 443A, TE 448A, TE 444A, TE 445A, TE 447A, TE 446A

ARGON LIQUID — SHEET 3 — 500 — ARGON FILTERS/LAPD TANK

MV-367-Ar (CONTROL PLUG)

AE 365V — H2O

AE 492V — PT 267B — H2O

LPN2 P 205

ARGON LIQUID — 300 — SHEET 3 — LAPD TANK/ARGON PUMP

MV-368-Ar

LPN2 P 204

FO-376-Ar, FO-381-Ar, FO-355-1-Ar, FO-355-2-Ar, FO-355-3-Ar, FO-355-4-Ar, FO-221-Ar, FO-219-Ar, FO-428-Ar, FO-222-Ar, FO-220-Ar, FO-256-Ar, FO-318-Ar, FO-355-5-Ar, FO-355-6-Ar, FO-355-7-Ar, FO-355-8-Ar, FO-355-9-Ar, FO-355-10-Ar, FO-355-11-Ar, FO-355-12-Ar, FO-383-Ar, FO-429-Ar, FO-430-Ar

AE 298A, SC 801, AE 299A, SV 484A, PARTICULATE, MV-483-Ar

PT 370A, PT 369A

LPAr P 102 — SET @ 3/0.2 PSIG — PSV 377A

LPN2 P 207, LPN2 P 206

TE 446A, TE 447A, TE 445A

Valve locked closed

Closed valves are indicated by the highlight not passing thru the valve.

MV-237-Ar

Open valves are indicated by the highlight passing thru the valve.

MV-238-Ar

Valves locked out in this configuration.

Piping actively pressurized by argon liquid or vapor

Piping actively pressurized by nitrogen liquid or vapor

Piping actively pressurized by Hydrogen/Argon gas

Piping evacuated

UNLESS OTHERWISE SPECIFIED	ORIGINATOR	R.SCHMITT	26-JUN-2007
	DRAWN	J.CATALANELLO	07-DEC-2007
± ± ±	CHECKED	R.SCHMITT	12-DEC-2007
1. BREAK ALL SHARP EDGES MAX. 2. DO NOT SCALE DRAWING. 3. DIMENSIONS BASED UPON ASME Y14.5M-1994 4. MAX. ALL MACH. SURFACES 5. DRAWING UNITS: U.S. INCH	APPROVED	R.SCHMITT	12-DEC-2007
	USED ON		
	MATERIAL		

FERMI NATIONAL ACCELERATOR LABORATORY
UNITED STATES DEPARTMENT OF ENERGY

FLARE UTILITIES
GAS PIPING & INSTRUMENT DIAGRAM
LIQUID ARGON PURITY DEMONSTRAT'N

SCALE	DRAWING NUMBER	SHEET	REV
NONE	3942.510-ME-444897	2 OF 4	M

CREATED WITH : Ideas12NXSeries | GROUP: PPD/MECHANICAL DEPARTMENT
version 11.13.12 page 18

Created: 08:12:10 on 18-10-12 (D-M-Y) By: catalan State: 1-INITIAL

Molecular sieve filter regeneration prior to tank purge procedure schematic

N2,Ar, OR Ar/H2 GAS 108 SHEET 1 — FILTER GAS SUPPLY/LAPD FILTERS
Ar/H2 GAS 109 SHEET 1 — FILTER GAS SUPPLY/LAPD FILTERS
N2, AR, OR Ar/H2 GAS 101 SHEET 1 — FILTER GAS SUPPLY/LAPD FILTERS
ARGON GAS SHEET 2 502 — FILTER VENTS/GAS VENT
ARGON GAS SHEET 2 501 — PURITY MONITOR/VENT COMPRESSOR
ARGON GAS SHEET 2 503 — LAPD FILTERS/LAPD TANK
ARGON LIQUID SHEET 2 500 — ARGON FILTERS/LAPD TANK
ARGON GAS 301 SHEET 2 — VENT COMPRESSOR/LAPD FILTERS
ARGON RECIRCULATION MAKEUP GAS 104 SHEET 1 — ARGON SUPPLY/LAPD FILTERS
ARGON LIQUID SHEET 2 505 — LAPD TANK/ARGON PUMP
ARGON LIQUID 302 SHEET 2 — LAPD CONDENSER/ARGON PUMP
ARGON LIQUID 300 SHEET 2 — LAPD TANK/ARGON PUMP
303 SHEET 1 Ar GAS-85 Psig
302 SHEET 1 Ar GAS-85 Psig
304 SHEET 1 Ar GAS-85 Psig

MV-716-HAr, PI 715H, SV-706-HAr, FCV-714-HAr, SP 473H, PARTICULATE 5 MICRON, SV-705-HAr, PI 684H, HTR 612H, TE 635H, TE 636H, TE 637H, MV-535-HAr, 700 SCFH Ar FLOW TYPICAL, MV-685-HAr, HTR 634H, TE 638H, TE 639H, TE 640H, (1200W, 2.3 SCFM MIN FLOW), MV-539-HAr SEE NOTE 1
PI 533H, PT 534H, FCV-592-HAr
SV-562-Ar, FCV 562A, MV-560-Ar
PI 589A, PT 590A, LPAr 111, LT 586A, PSV 587A SET @ 100 PSIG, MV-694-Ar SEE NOTE 1
LPAr 113, PSV 615A SET @ 100 PSIG, PSV-696-Ar SET @ 100 PSIG, MV-695-Ar, MV-692-Ar, MV-691-Ar, PT 704A, PI 673A, MV-675-Ar, VACUUM BREAK, FUTURE USE LBNE 35T, MV-5002-Ar SEE NOTE 2, SP 476A, PARTICULATE 15 MICRON, VACUUM BREAK
MV-593-Ar, INLINE PURITY MONITOR LONG 94L 26.9 INCH OPERATING LEVEL, PRM, PSV 672V SET @ 0 PSIG, SV-557-Ar, FO-722-Ar, AV-557-Ar
LPAr 114, PSV 683A SET @ 100 PSIG, PI 678A, PT 703A, MV-677-Ar, (CONTROL PLUG), MV-674-Ar, MV-559-Ar SEE NOTE 1, FLEXIBLE HOSE
PI 697A, TE 611A, LAr VAPORIZER, TS 700A, HTR 701A, SET @ 100 PSIG, PSV 693A, VENTS OUTSIDE, SV-699-Ar (30KW, 7,500 SCFH)
MV-676-Ar, MV-667-Ar
SP 721A, PARTICULATE 15 MICRON, VACUUM BREAK
TE 574H, OXYGEN FILTER TO GAS ANALYZERS, PT 570A, PI 571A, LPAr 120, SC 806, MV-513-HAr, MV-572-Ar, MV-569-Ar, PSV 568A SET @ 100 PSIG, SET @ 0 PSIG PSV 671V, MV-565-HAr, VACUUM BREAK, MV-554-Ar
TE 542A, MOLECULAR SIEVE TO GAS ANALYZERS, PT 603A, PI 604A, LPAr 124, SC 807, MV-540-Ar, MV-541-Ar, MV-602-Ar, PSV 601A SET @ 100 PSIG, SET @ 0 PSIG PSV 670V, MV-573-HAr, VACUUM BREAK, (CONTROL PLUG), MV-553-Ar
TE 626A, TE 627A, TE 628A, TE 629A, TE 630A, PT 669V, 77L, COPPER
TE 621A, TE 622A, TE 623A, TE 624A, TE 625A, PT 668V, 77L, MOLE SIEVE
MV-549-Ar, PARTICULATE 20 MICRON, MV-681-Ar, PI 680A, SP 474A, PSV 548A SET @ 100 PSIG, PI 545A, SC 808, PSV 543A SET @ 100 PSIG, SP 620A (200 MESH-72 MICRON), MV-544-Ar, MV-547-Ar
LAr TRUCK CONNECTION MAX OPERATING SUPPLY PRESSURE 70 PSIG
USED FOR FILLING & SPECIAL NEED ONLY. TRAILER PUMP MUST BE LOCKED OUT DURING FILL.
NOTE: SEE DWG#489659 FOR DETAILS OF FERMILAB LAr TRAILER
MV-710-HAr, FCV-711-HAr, AE 702H, FCV-713-HAr, MV-712-HAr, FCV-709-HAr, MV-708-HAr, PI 707H
MV-687-HAr (DRAIN), AE 566H H2O, VENT OUTSIDE
MV-686-HAr (DRAIN), AE 576H H2O, VENT OUTSIDE
INSIDE PC4, OUTSIDE PC4

PI 551A, PI 552A, LPAr 115, PSV 531A SET @ 100 PSIG, MV-550-Ar, CV-532-Ar, MV-610-Ar, MV-527-Ar, MV-609-Ar, FCVE 606A, FC, D, FT, (29.6 SCFH Ar MAX), CV-607-Ar, MV-608-Ar
VACUUM BREAK, (CONTROL PLUG), MV-516-Ar FILTER BYPASS
FLEXIBLE HOSE, TO LAr VAPORIZER
LPAr 121, PSV 500A SET @ 100 PSIG, PI 653A, MV-654-Ar
LPAr 123, PSV 517A SET @ 100 PSIG, PI 655A, MV-563-Ar
LPAr 104, PSV 650A SET @ 100 PSIG, PI 651A, MV-652-Ar, SV-501-Ar, AV 501A, Ar GAS-85 Psig, CONDENSER RETURN, MV-502-Ar, 2" SCH 10 INNER PIPE, PURIFICATION AUTO SHUTOFF
MV-633-Ar SEE NOTE 1
DPT 656A, PI 657A, MV-658-Ar, MV-659-Ar, MV-660-Ar
PI 509A, PI 510A, MV-508-Ar, DPT 507A, SC 504A, M, PT 505A, PSV-666-V (0 PSIG), MV-506-Ar, MV-511-Ar, MV-512-Ar, SC 805, MV-718-Ar
SP 475A, MV-717-Ar, PARTICULATE (234 MICRON), TE 662A, LIQUID PUMP (12.5 GPM AT 50.7 PSID AND 5700 RPM) (8 HR TIME CONSTANT) (5000 HR BEARING LIFE) (6300 RPM MAX AT 105HZ)
LPAr 107, PSV 663A SET @ 100 PSIG, PSV 720A SET @ 100 PSIG, LPAr 119, MV-719-Ar, PI 698A, MV-661-Ar SEE NOTE 2, FLEXIBLE HOSE
LPAr 118, PSV 598A SET @ 100 PSIG, PI 690A, MV-689-Ar, MV-688-Ar, MV-599-Ar 1" SCH 10 INNER PIPE
(CONTROL PLUG), MV-514-Ar, MV-5001-Ar SEE NOTE 2, VACUUM BREAK, FUTURE USE LBNE 35T
LPAr 116, PSV 564A SET @ 100 PSIG, MV-597-Ar, PI 665A, MV-594-Ar, FT, FT-595-Ar, LPN2 P 209, FOAM INSULATION, MV-596-Ar

NOTES

1. VALVE TO REMAIN LOCKED CLOSED DURING NORMAL LAPD CRYOGENIC OPERATIONS. VALVE MAY ONLY BE UNLOCKED AND OPENED BY A PPD/MD/F&T ENGINEER FOLLOWING A RELEVANT PROCEDURE.
2. VALVE TO REMAIN LOCKED CLOSED DURING LAPD CRYOGENIC OPERATIONS.

Valve locked closed
MV-237-Ar — Closed valves are indicated by the highlight not passing thru the valve.
MV-238-Ar — Open valves are indicated by the highlight passing thru the valve.
Valves locked out in this configuration.
Piping actively pressurized by argon liquid or vapor
Piping actively pressurized by nitrogen liquid or vapor
Piping actively pressurized by Hydrogen/Argon gas
Piping evacuated

UNLESS OTHERWISE SPECIFIED	ORIGINATOR	R.SCHMITT	26-JUN-2007
	DRAWN	J.CATALANELLO	07-DEC-2007
± ± ±	CHECKED	R.SCHMITT	12-DEC-2007
1. BREAK ALL SHARP EDGES MAX.	APPROVED	R.SCHMITT	12-DEC-2007
2. DO NOT SCALE DRAWING. 3. DIMENSIONS BASED UPON ASME Y14.5M-1994 4. MAX. ALL MACH. SURFACES	USED ON		
5. DRAWING UNITS: U.S. INCH	MATERIAL		

FERMI NATIONAL ACCELERATOR LABORATORY
UNITED STATES DEPARTMENT OF ENERGY

FLARE UTILITIES
GAS PIPING & INSTRUMENT DIAGRAM
LIQUID ARGON PURITY DEMONSTRAT'N

SCALE	DRAWING NUMBER	SHEET	REV
NONE	3942.510-ME-444897	3 OF 4	M

CREATED WITH : Ideas12NXSeries | GROUP: PPD/MECHANICAL DEPARTMENT
version 11.13.12 page 19

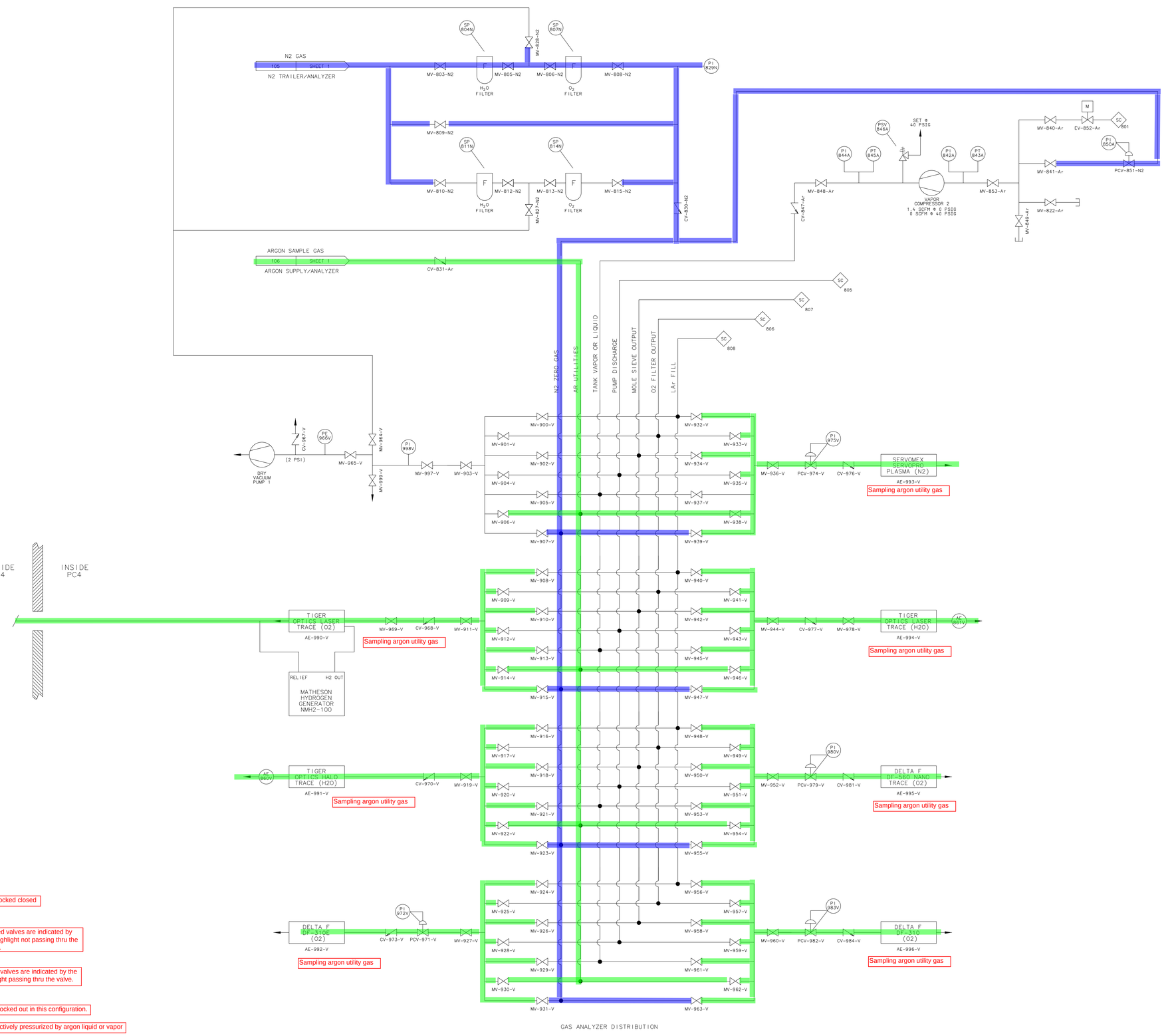

Valve locked closed

MV-237-Ar — Closed valves are indicated by the highlight not passing thru the valve.

MV-238-Ar — Open valves are indicated by the highlight passing thru the valve.

Valves locked out in this configuration.

Piping actively pressurized by argon liquid or vapor

Piping actively pressurized by nitrogen liquid or vapor

Piping actively pressurized by Hydrogen/Argon gas

Piping evacuated

Molecular sieve filter regeneration prior to tank purge procedure schematic

UNLESS OTHERWISE SPECIFIED			ORIGINATOR	R.SCHMITT	26-JUN-2007
			DRAWN	J.CATALANELLO	07-DEC-2007
±	±	±	CHECKED	R.SCHMITT	12-DEC-2007
1. BREAK ALL SHARP EDGES MAX. 2. DO NOT SCALE DRAWING. 3. DIMENSIONS BASED UPON ASME Y14.5M-1994 4. MAX. ALL MACH. SURFACES 5. DRAWING UNITS: U.S. INCH			APPROVED	R.SCHMITT	12-DEC-2007
			USED ON		
			MATERIAL		

FERMI NATIONAL ACCELERATOR LABORATORY
UNITED STATES DEPARTMENT OF ENERGY

FLARE UTILITIES
GAS PIPING & INSTRUMENT DIAGRAM
LIQUID ARGON PURITY DEMONSTRAT'N

SCALE	DRAWING NUMBER	SHEET	REV
NONE	3942.510-ME-444897	4 OF 4	M

CREATED WITH : Ideas12NXSeries | GROUP: PPD/MECHANICAL DEPARTMENT

version 11.13.12 page 20

Created: 08:12:24 on 18-10-12 (D-M-Y) By: catalan State: 1-INITIAL

3 - Tank configuration prior to system startup procedure

A PPD engineer should be present for all steps of this procedure. The procedure configures the system prior to system startup.

1. Lock closed MV-539-HAr, MV-694-Ar, MV-559-Ar, MV-633-Ar, and MV-661-Ar.
2. Other system valves should also be configured per the attached schematic. Highlighted valves are to be put in the open position. Valves not highlighted are to remain closed.
3. The next step is the “Tank purging procedure” when ready to begin the filling process.

REV	DESCRIPTION	DRAWN	DATE
M	MISC. REVISIONS MADE.	J.CATALANELLO	22-MAY-2012
F	MISC. REVISIONS MADE.	J.CATALANELLO	26-FEB-2010
		M.ADAMOWSKI	26-FEB-2010
G	MISC. REVISIONS MADE.	J.CATALANELLO	10-JAN-2011
		T.TOPE	12-JAN-2012
H	MISC. REVISIONS MADE.	J.CATALANELLO	10-JAN-2011
		T.TOPE	03-FEB-2011
J	MISC. REVISIONS MADE.	J.CATALANELLO	23-FEB-2011
		T.TOPE	28-FEB-2011
K	MISC. REVISIONS MADE.	J.CATALANELLO	04-MAR-2011
		T.TOPE	22-JUN-2011
L	MISC. REVISIONS MADE.	J.CATALANELLO	11-JUL-2011
		T.TOPE	01-MAR-2012
A	ADDED TAG NUMBERS TO VALVE TYPES	V. MAJDANSKI	25FEB08
		R. SCHMITT	26FEB08
B	MOVE CONDENSOR OUTSIDE TANK	J.CATALANELLO	07-DEC-2008
		R.SCHMITT	10-DEC-2008
C	MISC. REVISIONS MADE.	J.CATALANELLO	23-DEC-2008
		R.SCHMITT	06-JAN-2009
D	MISC. REVISIONS MADE.	J.CATALANELLO	17-NOV-2009
		T.TOPE	14-DEC-2009
E	MISC. REVISIONS MADE.	J.CATALANELLO	17-NOV-2009
		T.TOPE	15-JAN-2010

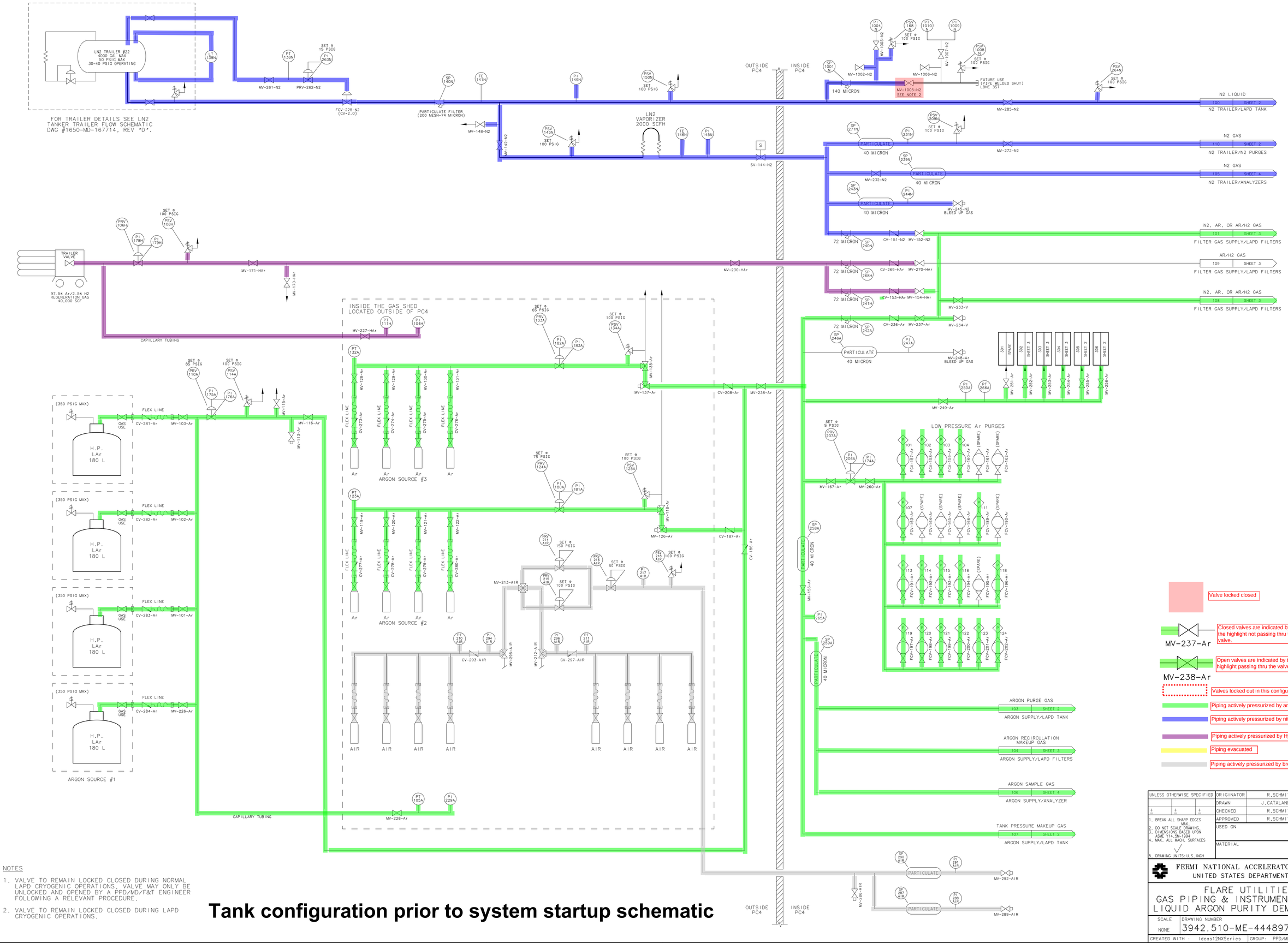

Valve locked closed

MV-237-Ar — Closed valves are indicated by the highlight not passing thru the valve.

MV-238-Ar — Open valves are indicated by the highlight passing thru the valve.

Valves locked out in this configuration.

Piping actively pressurized by argon liquid or vapor

Piping actively pressurized by nitrogen liquid or vapor

Piping actively pressurized by Hydrogen/Argon gas

Piping evacuated

Piping actively pressurized by breathable air

NOTES

1. VALVE TO REMAIN LOCKED CLOSED DURING NORMAL LAPD CRYOGENIC OPERATIONS. VALVE MAY ONLY BE UNLOCKED AND OPENED BY A PPD/MD/F&T ENGINEER FOLLOWING A RELEVANT PROCEDURE.
2. VALVE TO REMAIN LOCKED CLOSED DURING LAPD CRYOGENIC OPERATIONS.

Tank configuration prior to system startup schematic

UNLESS OTHERWISE SPECIFIED	ORIGINATOR	R.SCHMITT	26-JUN-2007
	DRAWN	J.CATALANELLO	07-DEC-2007
± ± ±	CHECKED	R.SCHMITT	12-DEC-2007
1. BREAK ALL SHARP EDGES MAX.	APPROVED	R.SCHMITT	12-DEC-2007
2. DO NOT SCALE DRAWING. 3. DIMENSIONS BASED UPON ASME Y14.5M-1994 4. MAX. ALL MACH. SURFACES	USED ON		
5. DRAWING UNITS: U.S. INCH	MATERIAL		

FERMI NATIONAL ACCELERATOR LABORATORY
UNITED STATES DEPARTMENT OF ENERGY

FLARE UTILITIES
GAS PIPING & INSTRUMENT DIAGRAM
LIQUID ARGON PURITY DEMONSTRAT'N

SCALE	DRAWING NUMBER	SHEET	REV
NONE	3942.510-ME-444897	1 OF 4	M

CREATED WITH : Ideas12NXSeries | GROUP: PPD/MECHANICAL DEPARTMENT

Tank configuration prior to system startup schematic

Valve locked closed	
Closed valves are indicated by the highlight not passing thru the valve.	MV-237-Ar
Open valves are indicated by the highlight passing thru the valve.	MV-238-Ar
Valves locked out in this configuration.	
Piping actively pressurized by argon liquid or vapor	
Piping actively pressurized by nitrogen liquid or vapor	
Piping actively pressurized by Hydrogen/Argon gas	
Piping evacuated	

UNLESS OTHERWISE SPECIFIED	ORIGINATOR	R.SCHMITT	26-JUN-2007
	DRAWN	J.CATALANELLO	07-DEC-2007
± ± ±	CHECKED	R.SCHMITT	12-DEC-2007
1. BREAK ALL SHARP EDGES MAX.	APPROVED	R.SCHMITT	12-DEC-2007
2. DO NOT SCALE DRAWING. 3. DIMENSIONS BASED UPON ASME Y14.5M-1994 4. MAX. ALL MACH. SURFACES	USED ON		
5. DRAWING UNITS: U.S. INCH	MATERIAL		

FERMI NATIONAL ACCELERATOR LABORATORY
UNITED STATES DEPARTMENT OF ENERGY

FLARE UTILITIES
GAS PIPING & INSTRUMENT DIAGRAM
LIQUID ARGON PURITY DEMONSTRAT'N

SCALE	DRAWING NUMBER	SHEET	REV
NONE	3942.510-ME-444897	2 OF 4	M

CREATED WITH : Ideas12NXSeries | GROUP: PPD/MECHANICAL DEPARTMENT

version 11.13.12 page 23

Created: 08:12:10 on 18-10-12 (D-M-Y) By: catalan State: 1-INITIAL

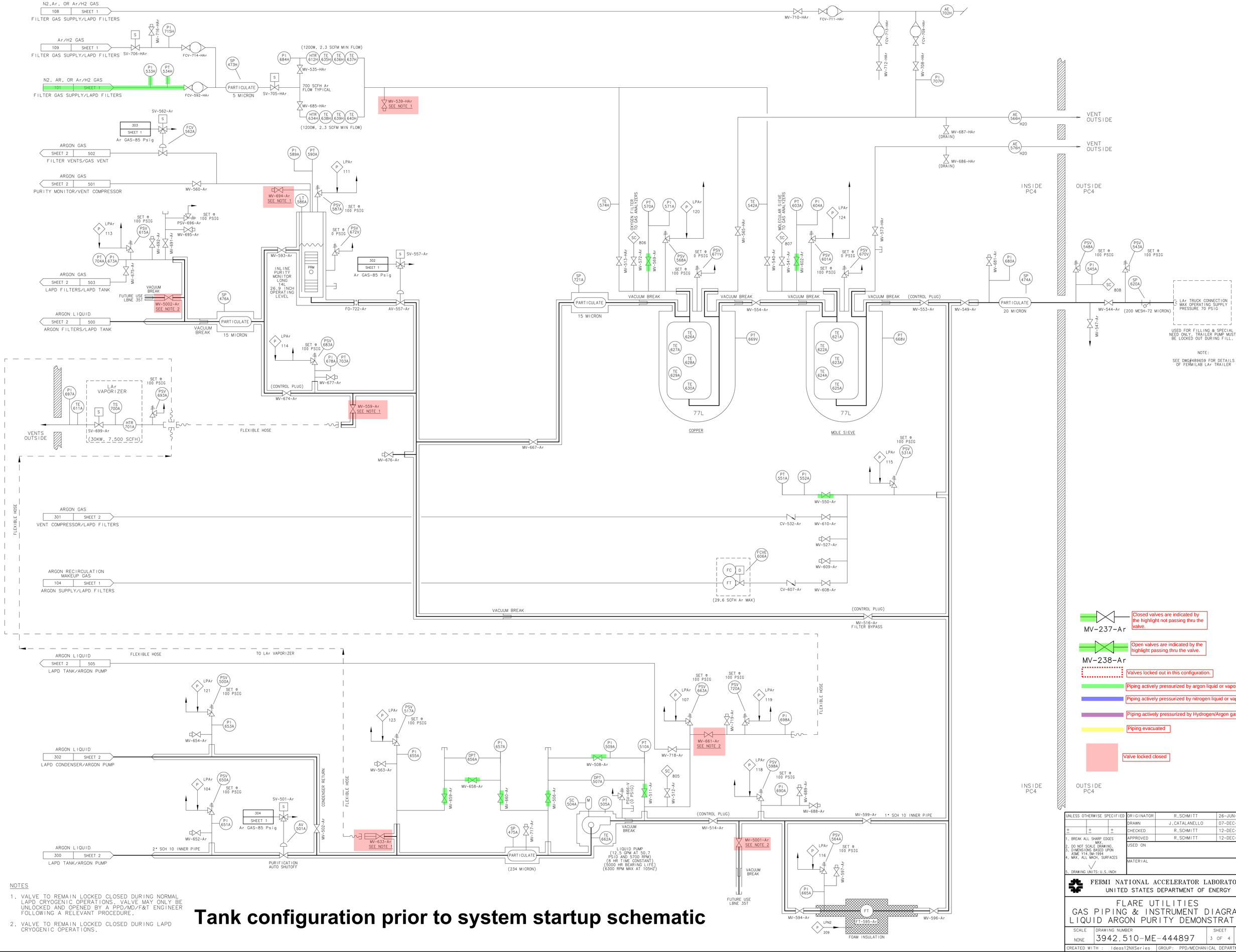

NOTES

1. VALVE TO REMAIN LOCKED CLOSED DURING NORMAL LAPD CRYOGENIC OPERATIONS. VALVE MAY ONLY BE UNLOCKED AND OPENED BY A PPD/MD/F&T ENGINEER FOLLOWING A RELEVANT PROCEDURE.
2. VALVE TO REMAIN LOCKED CLOSED DURING LAPD CRYOGENIC OPERATIONS.

Tank configuration prior to system startup schematic

UNLESS OTHERWISE SPECIFIED	ORIGINATOR	R.SCHMITT	26-JUN-2007
	DRAWN	J.CATALANELLO	07-DEC-2007
± ± ±	CHECKED	R.SCHMITT	12-DEC-2007
1. BREAK ALL SHARP EDGES MAX.	APPROVED	R.SCHMITT	12-DEC-2007
2. DO NOT SCALE DRAWING. 3. DIMENSIONS BASED UPON ASME Y14.5M-1994 4. MAX. ALL MACH. SURFACES	USED ON		
5. DRAWING UNITS: U.S. INCH	MATERIAL		

FERMI NATIONAL ACCELERATOR LABORATORY
UNITED STATES DEPARTMENT OF ENERGY

FLARE UTILITIES
GAS PIPING & INSTRUMENT DIAGRAM
LIQUID ARGON PURITY DEMONSTRAT'N

SCALE	DRAWING NUMBER	SHEET	REV
NONE	3942.510-ME-444897	3 OF 4	M

CREATED WITH : Ideas12NXSeries | GROUP: PPD/MECHANICAL DEPARTMENT

version 11.13.12 page 24

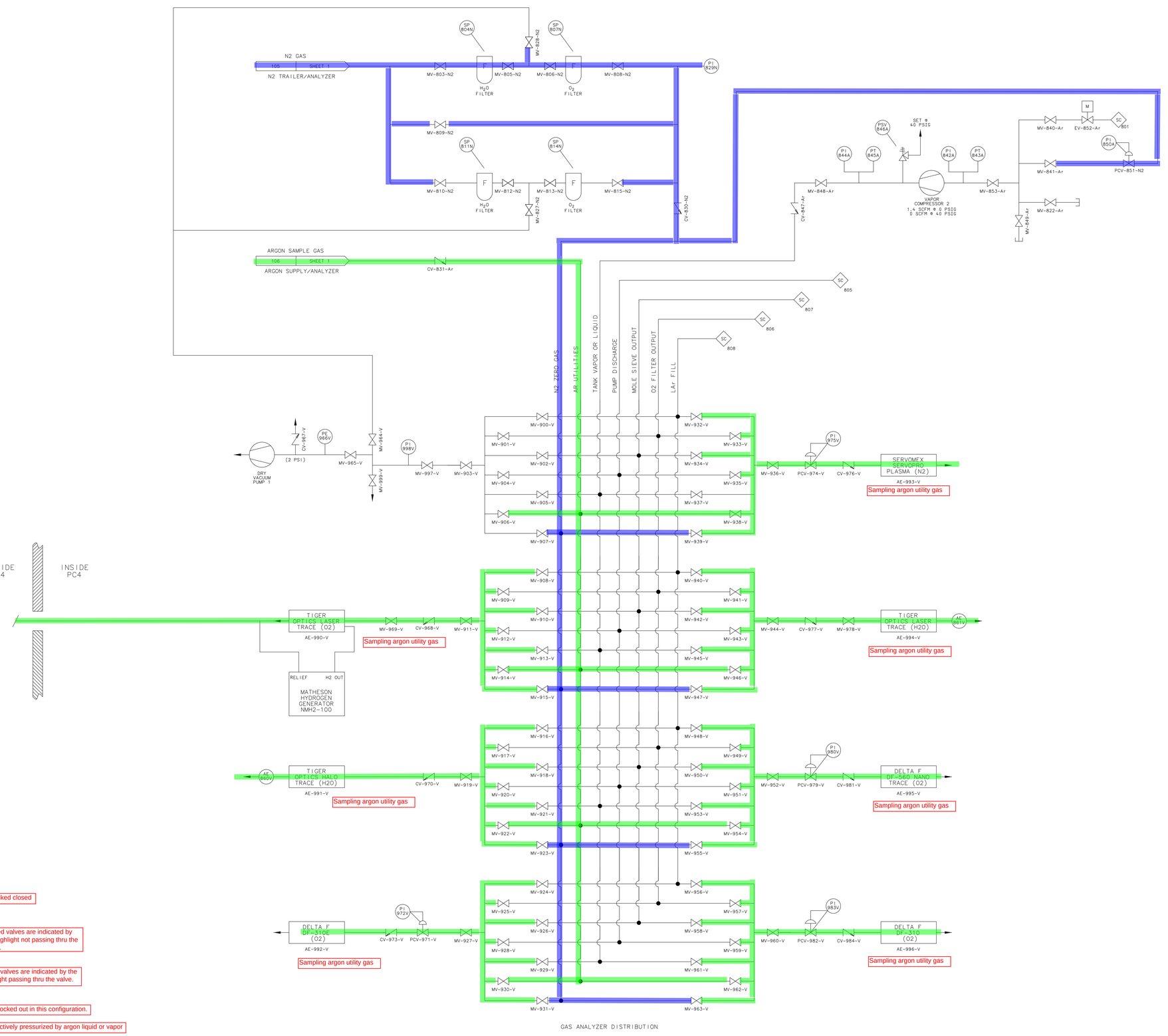

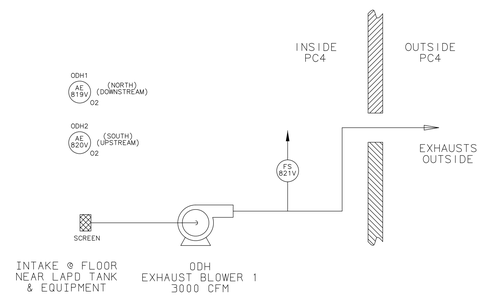

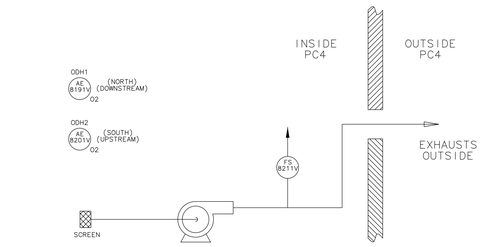

Valve locked closed

Closed valves are indicated by the highlight not passing thru the valve.

MV-237-Ar

Open valves are indicated by the highlight passing thru the valve.

MV-238-Ar

Valves locked out in this configuration.

Piping actively pressurized by argon liquid or vapor

Piping actively pressurized by nitrogen liquid or vapor

Piping actively pressurized by Hydrogen/Argon gas

Piping evacuated

Tank configuration prior to system startup schematic

UNLESS OTHERWISE SPECIFIED			ORIGINATOR	R.SCHMITT	26-JUN-2007
			DRAWN	J.CATALANELLO	07-DEC-2007
±	±	±	CHECKED	R.SCHMITT	12-DEC-2007
1. BREAK ALL SHARP EDGES MAX. 2. DO NOT SCALE DRAWING. 3. DIMENSIONS BASED UPON ASME Y14.5M-1994 4. MAX. ALL MACH. SURFACES			APPROVED	R.SCHMITT	12-DEC-2007
			USED ON		
5. DRAWING UNITS: U.S. INCH			MATERIAL		

FERMI NATIONAL ACCELERATOR LABORATORY
UNITED STATES DEPARTMENT OF ENERGY

FLARE UTILITIES
GAS PIPING & INSTRUMENT DIAGRAM
LIQUID ARGON PURITY DEMONSTRAT'N

SCALE	DRAWING NUMBER	SHEET	REV
NONE	3942.510-ME-444897	4 OF 4	M

CREATED WITH : Ideas12NXSeries | GROUP: PPD/MECHANICAL DEPARTMENT

version 11.13.12 page 25

Created: 08:12:24 on 18-10-12 (D-M-Y) By: catalan State: 1-INITIAL

4 - Tank purging procedure

A PPD engineer must be present for all steps of this procedure. If PPD has approved unattended operation then a PPD engineer may initiate unattended operation during step 14 if conditions are stable. This procedure removes the air inside the tank by flowing argon gas into the bottom of the tank and pushing air out the top of the tank.

1. The following PLC loops should be active at the start of purging:
    a. PCV-351-Ar – tank vent to avoid over pressure
    b. AV-225-N2 – nitrogen supply shut-off in the event of PC4 ODH
    c. Compressor #1 - shutoff to avoid tank vacuum
    d. Compressor #2 - shutoff to avoid tank vacuum
    e. Vacuum pump #1 – shutoff to avoid tank vacuum
2. Configure all valves as shown in the attached highlighted schematic.
3. Turn on FCVE-300-Ar control loop to begin purging tank at 5 SCFM with argon.
4. Open and adjust both FCV-221-Ar and FCV-222-Ar to 25 sccm.
5. When the tank pressure reaches 0.3 psig as indicated by PT-369-Ar proceed to the next step.
6. Turn on control loop for EV-852-Ar and make the set point 35 psia.
7. Turn on compressor #2 using the PLC.
8. Close MV-962-V and open MV-961-V to send tank gas to the DF-310 oxygen analyzer AE-996-V.
9. Close MV-922-V and open MV-921-V to send tank gas to the Halo Trace water analyzer AE-991-V.
10. When AE-996-V reaches 10 ppm close MV-428-Ar and open MV-318-Ar.
11. Close MV-219-Ar.
12. When AE-996-V reaches 40 ppm oxygen, close MV-930-V and open MV-929-V to send tank gas to the DF-310E oxygen analyzer AE-992-V.
13. Close MV-938-V and open MV-937-V to send tank gas to the Servomex Nitrogen meter AE-993-V.
14. Continue purge until AE-992-V reports <5 ppm oxygen.
15. Close MV-220-Ar.
16. Turn on PLC loop that will use FCVE-300-Ar to maintain 2 psig of argon pressure in the tank while the transition to gas recirculation is made.
17. Close MV-458-Ar.
18. Turn on the PLC loop that actuates AV-432-Ar to provide tank make up gas. Open MV-433-Ar.
19. Close MV-961-V and open MV-962-V to put the DF-310 oxygen meter AE-996-V on argon utility gas.
20. Close MV-954-V and open MV-953-V to put the DF-560 oxygen meter AE-995-V on tank gas.
21. Proceed to the “Tank gas recirculation procedure”.

REV	DESCRIPTION	DRAWN	DATE
M	MISC. REVISIONS MADE.	J.CATALANELLO	22-MAY-2012
F	MISC. REVISIONS MADE.	J.CATALANELLO	26-FEB-2010
		M.ADAMOWSKI	26-FEB-2010
G	MISC. REVISIONS MADE.	J.CATALANELLO	10-JAN-2011
		T.TOPE	12-JAN-2012
H	MISC. REVISIONS MADE.	J.CATALANELLO	10-JAN-2011
		T.TOPE	03-FEB-2011
J	MISC. REVISIONS MADE.	J.CATALANELLO	23-FEB-2011
		T.TOPE	28-FEB-2011
K	MISC. REVISIONS MADE.	J.CATALANELLO	04-MAR-2011
		T.TOPE	22-JUN-2011
L	MISC. REVISIONS MADE.	J.CATALANELLO	11-JUL-2011
		T.TOPE	01-MAR-2012
A	ADDED TAG NUMBERS TO VALVE TYPES	V. MAJDANSKI	25FEB08
		R. SCHMITT	26FEB08
B	MOVE CONDENSOR OUTSIDE TANK	J.CATALANELLO	07-DEC-2008
		R.SCHMITT	10-DEC-2008
C	MISC. REVISIONS MADE.	J.CATALANELLO	23-DEC-2008
		R.SCHMITT	06-JAN-2009
D	MISC. REVISIONS MADE.	J.CATALANELLO	17-NOV-2009
		T.TOPE	14-DEC-2009
E	MISC. REVISIONS MADE.	J.CATALANELLO	17-NOV-2009
		T.TOPE	15-JAN-2010

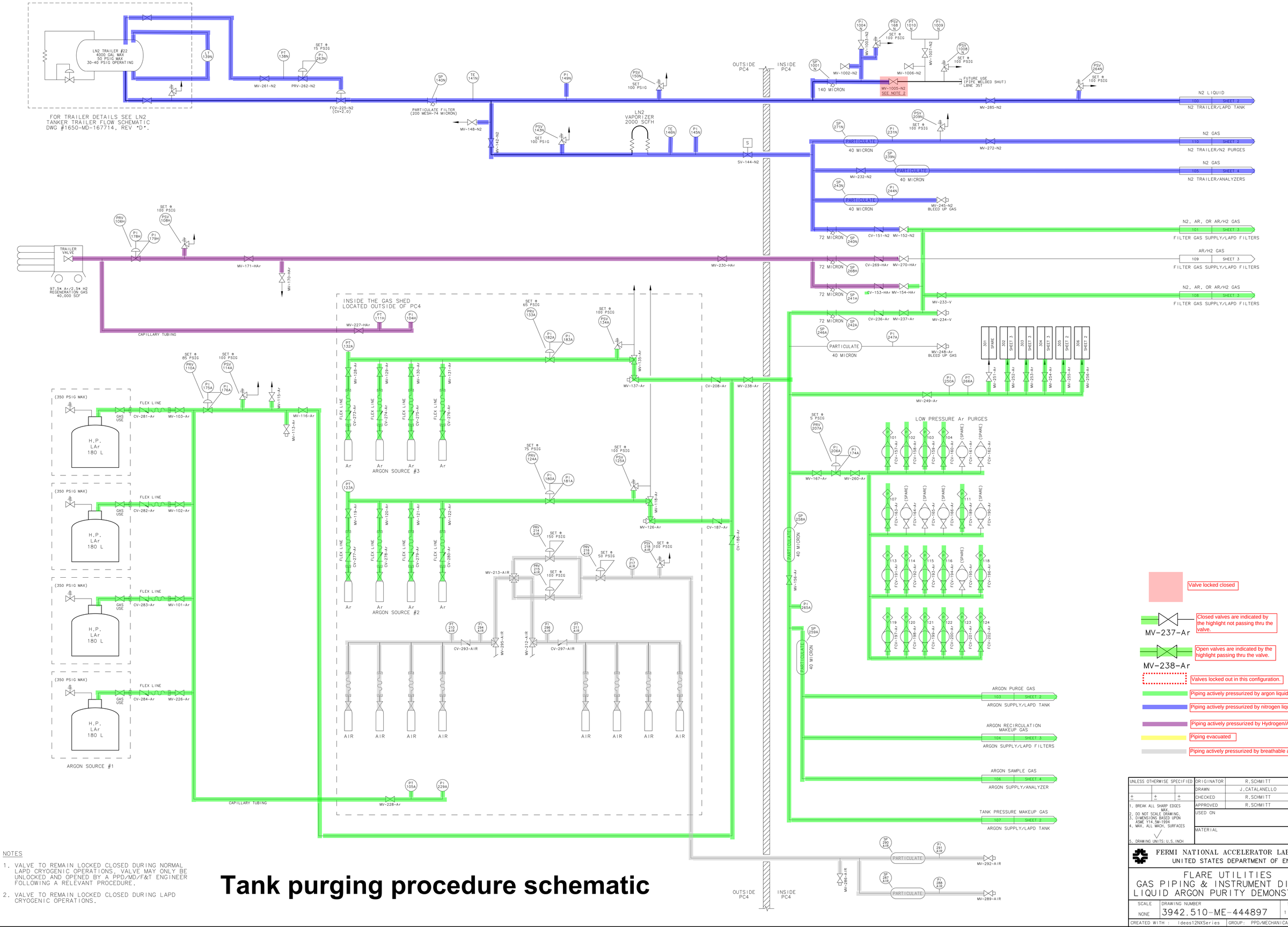

NOTES

1. VALVE TO REMAIN LOCKED CLOSED DURING NORMAL LAPD CRYOGENIC OPERATIONS. VALVE MAY ONLY BE UNLOCKED AND OPENED BY A PPD/MD/F&T ENGINEER FOLLOWING A RELEVANT PROCEDURE.
2. VALVE TO REMAIN LOCKED CLOSED DURING LAPD CRYOGENIC OPERATIONS.

Tank purging procedure schematic

UNLESS OTHERWISE SPECIFIED	ORIGINATOR	R.SCHMITT	26-JUN-2007
	DRAWN	J.CATALANELLO	07-DEC-2007
± ± ±	CHECKED	R.SCHMITT	12-DEC-2007
1. BREAK ALL SHARP EDGES MAX.	APPROVED	R.SCHMITT	12-DEC-2007
2. DO NOT SCALE DRAWING. 3. DIMENSIONS BASED UPON ASME Y14.5M-1994 4. MAX. ALL MACH. SURFACES	USED ON		
5. DRAWING UNITS: U.S. INCH	MATERIAL		

FERMI NATIONAL ACCELERATOR LABORATORY
UNITED STATES DEPARTMENT OF ENERGY

FLARE UTILITIES
GAS PIPING & INSTRUMENT DIAGRAM
LIQUID ARGON PURITY DEMONSTRAT'N

SCALE	DRAWING NUMBER	SHEET	REV
NONE	3942.510-ME-444897	1 OF 4	M

CREATED WITH : Ideas12NXSeries | GROUP: PPD/MECHANICAL DEPARTMENT

Tank purging procedure schematic

VENTS OUTSIDE

OUTSIDE PC4

INSIDE PC4

N2 LIQUID — 100 — SHEET 1 — N2 TRAILER/LAPD TANK

MV-302-N2

(200 MESH-74 MICRON)

FCV-305-N2 (CV=2.0)

NITROGEN PHASE SEPERATOR

0.8 PSID OPERATING LEVEL HOLDS 25 GALS (95L) 0-100% LEVEL

MV-495-N2

CV-494-N2

N2 GAS — 110 — SHEET 1 — N2 TRAILER/N2 PURGES

MV-415-N2

MV-477-N2

FCV-382-N2 (201), FCV-417-N2 (202), FCV-449-N2 (203), FCV-451-N2 (204), FCV-452-N2 (205)

FCV-453-N2 (206), FCV-454-N2 (207), FCV-461-N2 (208), FCV-664-N2 (209), FCV-682-N2 (SPARE)

FCV-342-N2 (211), FCV-344-N2 (212), FCV-345-N2 (213), FCV-348-N2 (214), FCV-349-N2 (215)

FCV-360-N2 (216), FCV-366-N2 (217), FCV-371-N2 (218), FCV-373-N2 (219), FCV-374-N2 (220)

(200 MESH-74 MICRON) FCV-312-N2 (CV=0.3)

SV-319-N2, SV-320-N2, SV-321-N2, SV-450-N2

MV-333-N2, MV-469-N2, MV-470-N2, MV-313-N2, MV-314-N2, MV-315-N2

ARGON CONDENSER

COIL 3: 1100 WATTS

COIL 2: 3300 WATTS

COIL 1: 4400 WATTS

MV-434-Ar, MV-466-Ar, MV-465-Ar, MV-489-Ar, MV-372-Ar

ARGON GAS — SHEET 3 — 502 — FILTERS VENTS/GAS VENT

ARGON LIQUID — 302 — SHEET 3 — LAPD CONDENSER/ARGON PUMP

ARGON LIQUID — SHEET 3 — 505 — LAPD TANK/ARGON PUMP

MV-499-Ar, MV-498-Ar

ARGON GAS — SHEET 3 — 501 — PURITY MONITOR/VENT COMPRESSOR

SV-351-Ar, 305 SHEET 1 Ar GAS-85 Psig, PCV 351A

MV-350-Ar, MV-354-Ar

MV-458-Ar, MV-461-Ar, MV-341-Ar, MV-343-Ar, MV-457-Ar, MV-347-Ar, MV-353-Ar, MV-351-Ar, MV-436-Ar

VAPOR COMPRESSOR 1
6 SCFM @ 0 PSIG
1 SCFM @ 35 PSIG

MV-461-Ar, MV-462-Ar, MV-459-Ar, MV-364-Ar, MV-464-Ar, MV-438-Ar, MV-437-Ar

ARGON GAS — SHEET 3 — 301 — VENT COMPRESSOR/LAPD FILTERS

TANK PRESSURE MAKEUP GAS — 107 — SHEET 1 — ARGON SUPPLY/LAPD TANK

PARTICULATE 40 MICRON

SV-432-Ar, 306 SHEET 1 Ar GAS-85 Psig, MV-433-Ar, MV-472-Ar

MV-485-Ar, MV-486-Ar, MV-427-Ar, MV-324-Ar, MV-327-Ar, MV-328-Ar, MV-322-Ar, MV-325-Ar, MV-480-Ar

(154 IN. H2O MAX) (5.6 PSI MAX)

ARGON GAS — 503 — SHEET 3 — LAPD FILTERS/LAPD TANK

CV-478-Ar, MV-340-Ar

ARGON PURGE GAS — 103 — SHEET 1 — ARGON SUPPLY/LAPD TANK

CV-338-Ar, MV-339-Ar, MV-330-Ar

(INITIAL TANK PURGE 5 SCFM)

MV-384-Ar

FIBERGLASS AND FOAM INSULATION

VENT AND CONDENSER PORT

TRANSLATING ROD IN

TRANSLATING RTD PORT

PRM PORT

TANK GAS VOLUME 870 ft³

VAPOR SPACE CAPILLARY 22.5° BELOW MAIN FLANGE

2/3 ELEVATION CAPILLARY 80° FROM BOTTOM

1/3 ELEVATION CAPILLARY 40° FROM BOTTOM

LIQUID ARGON 5,875 GAL (22,240L) (785 ft³) 31 TONNES

TE 5, TE 6, TE 7, TE 1, TE 2, TE 3, PRM 1, TE 419A, TE 412A

HTR 385A, 386A, 387A, 397A, 398A, 399A, TE 409A, TE 410A, TE 411A

HTR 388A, 389A, 390A, 391A, 392A, 393A, 394A, 395A, 396A, 400A, 401A, 402A, 403A, 404A, 405A, 406A, 407A, 408A, TE 413A, TE 414A, TE 418A, TE 420A, TE 421A, TE 422A, TE 439A, TE 440A, TE 442A

PURITY MONITOR LONG PRM 3

(25 NOZZLES EACH 3/64 INCH)

TANK WALL HEAT LEAKAGE
2100 WATTS (800L/DAY)
(3.5%/DAY) (1000 SCFH)

LONG BO TPC: +2.25° LL3, LL4; 0 LL2; -8.5° LL1

MAXIMUM LIQUID DEPTH 114.5"

TPC BIAS, TPC SIGNAL, TPC HV, TPC LCR, RELIEF PORT, PRM PORT

PURITY MONITOR LONG PRM 2, PURITY MONITOR SHORT PRM 4

PHASE SEPERATOR

ARGON LIQUID — SHEET 3 — 500 — ARGON FILTERS/LAPD TANK

MV-367-Ar (CONTROL PLUG)

AE 365V H2O

AE 492V H2O, PT 267B

ARGON LIQUID — 300 — SHEET 3 — LAPD TANK/ARGON PUMP

MV-368-Ar

Valve locked closed

Closed valves are indicated by the highlight not passing thru the valve. MV-237-Ar

Open valves are indicated by the highlight passing thru the valve. MV-238-Ar

Valves locked out in this configuration.

Piping actively pressurized by argon liquid or vapor

Piping actively pressurized by nitrogen liquid or vapor

Piping actively pressurized by Hydrogen/Argon gas

Piping evacuated

UNLESS OTHERWISE SPECIFIED	ORIGINATOR	R.SCHMITT	26-JUN-2007
	DRAWN	J.CATALANELLO	07-DEC-2007
± ± ±	CHECKED	R.SCHMITT	12-DEC-2007
1. BREAK ALL SHARP EDGES MAX. 2. DO NOT SCALE DRAWING. 3. DIMENSIONS BASED UPON ASME Y14.5M-1994 4. MAX., ALL MACH. SURFACES 5. DRAWING UNITS: U.S. INCH	APPROVED	R.SCHMITT	12-DEC-2007
	USED ON		
	MATERIAL		

FERMI NATIONAL ACCELERATOR LABORATORY
UNITED STATES DEPARTMENT OF ENERGY

FLARE UTILITIES
GAS PIPING & INSTRUMENT DIAGRAM
LIQUID ARGON PURITY DEMONSTRAT'N

SCALE	DRAWING NUMBER	SHEET	REV
NONE	3942.510-ME-444897	2 OF 4	M

CREATED WITH : Ideas12NXSeries | GROUP: PPD/MECHANICAL DEPARTMENT

version 11.13.12 page 28

Created: 08:12:10 on 18-10-12 (D-M-Y) By: catalan State: 1-INITIAL

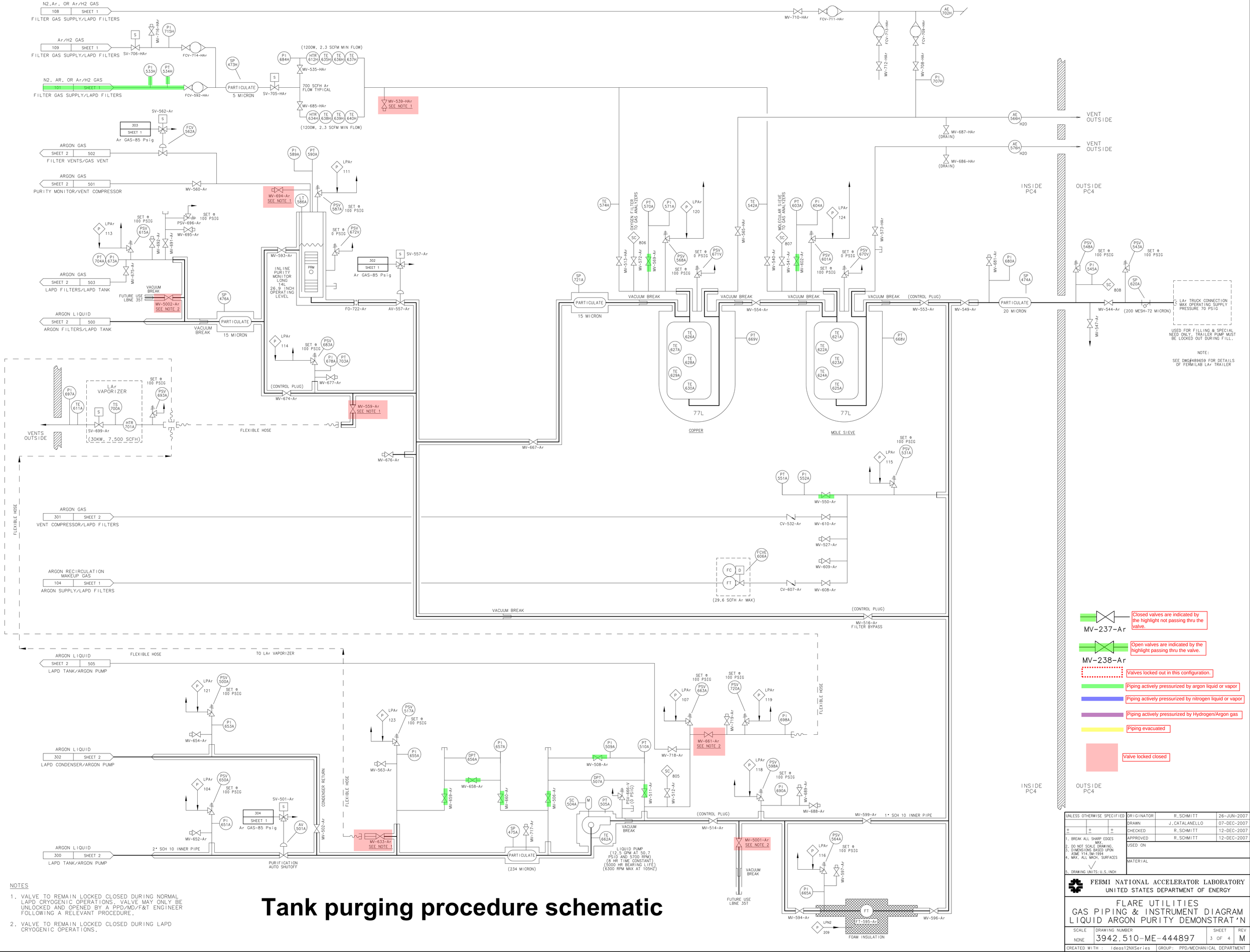

NOTES

1. VALVE TO REMAIN LOCKED CLOSED DURING NORMAL LAPD CRYOGENIC OPERATIONS. VALVE MAY ONLY BE UNLOCKED AND OPENED BY A PPD/MD/F&T ENGINEER FOLLOWING A RELEVANT PROCEDURE.
2. VALVE TO REMAIN LOCKED CLOSED DURING LAPD CRYOGENIC OPERATIONS.

Tank purging procedure schematic

UNLESS OTHERWISE SPECIFIED			ORIGINATOR	R.SCHMITT	26-JUN-2007
			DRAWN	J.CATALANELLO	07-DEC-2007
±	±	±	CHECKED	R.SCHMITT	12-DEC-2007
1. BREAK ALL SHARP EDGES MAX.			APPROVED	R.SCHMITT	12-DEC-2007
2. DO NOT SCALE DRAWING. 3. DIMENSIONS BASED UPON ASME Y14.5M-1994 4. MAX. ALL MACH. SURFACES			USED ON		
5. DRAWING UNITS: U.S. INCH			MATERIAL		

FERMI NATIONAL ACCELERATOR LABORATORY
UNITED STATES DEPARTMENT OF ENERGY

FLARE UTILITIES
GAS PIPING & INSTRUMENT DIAGRAM
LIQUID ARGON PURITY DEMONSTRAT'N

SCALE	DRAWING NUMBER	SHEET	REV
NONE	3942.510-ME-444897	3 OF 4	M

CREATED WITH : Ideas12NXSeries | GROUP: PPD/MECHANICAL DEPARTMENT

version 11.13.12 page 29

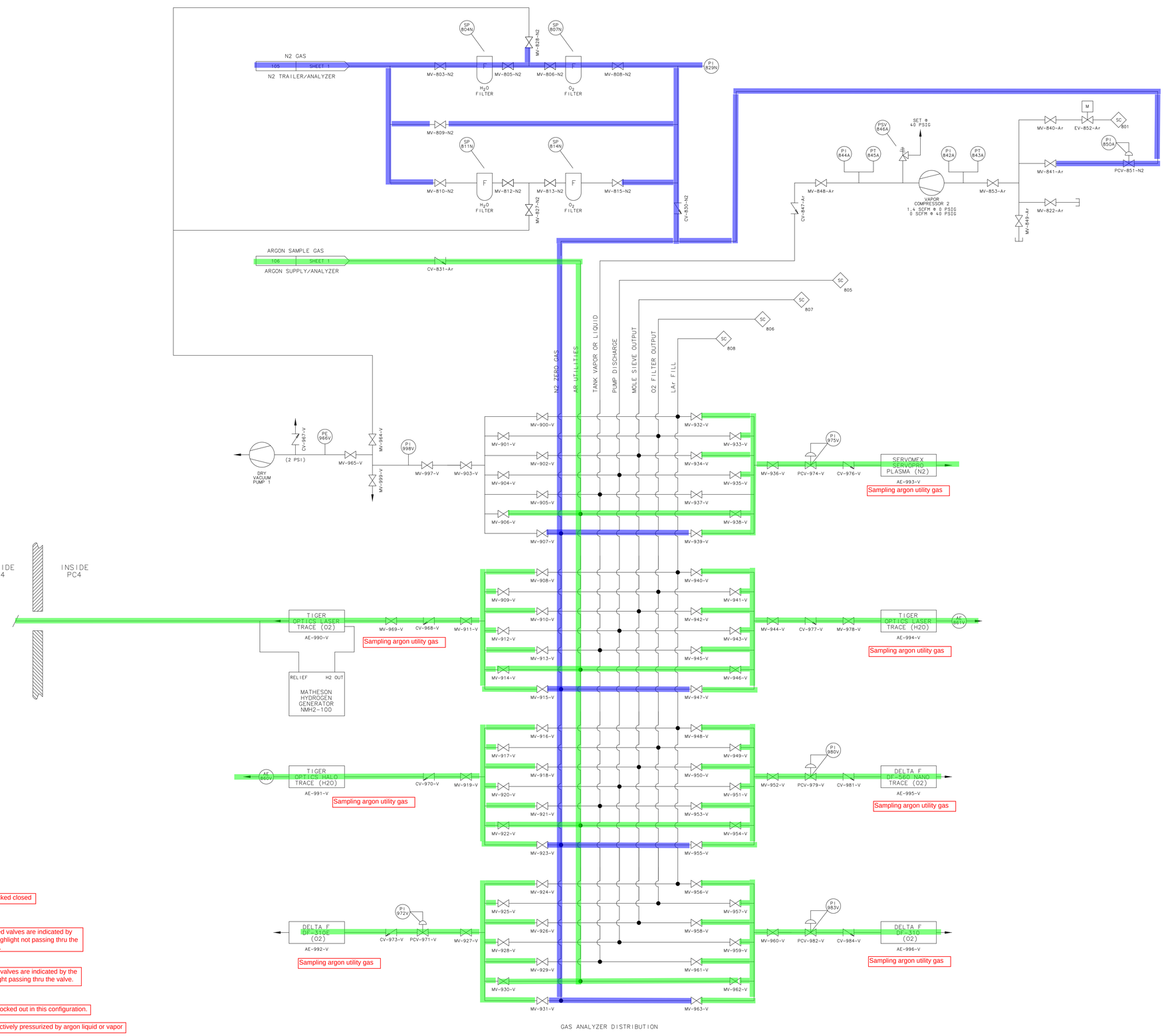

Valve locked closed

Closed valves are indicated by the highlight not passing thru the valve.

MV-237-Ar

Open valves are indicated by the highlight passing thru the valve.

MV-238-Ar

Valves locked out in this configuration.

Piping actively pressurized by argon liquid or vapor

Piping actively pressurized by nitrogen liquid or vapor

Piping actively pressurized by Hydrogen/Argon gas

Piping evacuated

Tank purging procedure schematic

UNLESS OTHERWISE SPECIFIED			ORIGINATOR	R.SCHMITT	26-JUN-2007
			DRAWN	J.CATALANELLO	07-DEC-2007
±	±	±	CHECKED	R.SCHMITT	12-DEC-2007
1. BREAK ALL SHARP EDGES MAX. 2. DO NOT SCALE DRAWING. 3. DIMENSIONS BASED UPON ASME Y14.5M-1994 4. MAX. ALL MACH. SURFACES			APPROVED	R.SCHMITT	12-DEC-2007
			USED ON		
5. DRAWING UNITS: U.S. INCH			MATERIAL		

FERMI NATIONAL ACCELERATOR LABORATORY
UNITED STATES DEPARTMENT OF ENERGY

FLARE UTILITIES
GAS PIPING & INSTRUMENT DIAGRAM
LIQUID ARGON PURITY DEMONSTRAT'N

SCALE	DRAWING NUMBER	SHEET	REV
NONE	3942.510-ME-444897	4 OF 4	M

CREATED WITH : Ideas12NXSeries | GROUP: PPD/MECHANICAL DEPARTMENT

version 11.13.12 page 30

Created: 08:12:24 on 18-10-12 (D-M-Y) By: catalan State: 1-INITIAL

5 - Tank gas recirculation procedure

A PPD engineer must be present for each step of this procedure. If PPD has approved unattended operation then the PPD engineer may initiate unattended operation if the process is stable after step 6. This procedure uses a bellows pump to pull argon gas out of the top of the tank, send it thru the molecular sieve and oxygen filters, and then return the gas to the bottom of the tank in a closed loop. Heaters on the tank shell will drive off water attached to the stainless steel.

1. The following PLC loops should be active:
    a. AV-432-Ar – argon makeup gas to avoid tank vacuum
    b. PCV-351-Ar – tank vent to avoid tank over pressure
    c. AV-225-N2 – nitrogen supply shut-off in the event of PC4 ODH
    d. Compressor #1 - shutoff to avoid tank vacuum
    e. Compressor #2 - shutoff to avoid tank vacuum
    f. Vacuum pump #1 - shutoff to avoid tank vacuum
    g. AV-557-Ar – remains closed during gas recirculation
    h. FCVE-300-Ar – provides argon gas to keep the tank at 2 psig during the transition from the gas purging phase to the gas recirculation phase.
2. Configure all valves as shown in the attached highlighted schematic.
3. Using the PLC turn on vapor compressor #1.
4. Turn off the FCVE-300-Ar control loop and close MV-339-Ar.
5. Open MV-608-Ar and turn on the FCVE-606-Ar control loop to maintain tank pressure at 2 psig.
6. Turn on tank shell heater PLC control loop and make the set point 50 C.
7. Once the desired contamination level is reached during gas recirculation then gas recirculation may be maintained until the liquid argon supply is ready.
8. Turn off tank shell heater PLC control loop and allow tank to cool for 1 day prior to start of liquid argon fill.
9. Proceed to the “Tank filling procedure”.

REV	DESCRIPTION	DRAWN	DATE
		APPROVED	DATE
M	MISC. REVISIONS MADE.	J.CATALANELLO	22-MAY-2012
L	MISC. REVISIONS MADE.	J.CATALANELLO T.TOPE	11-JUL-2011 01-MAR-2012
K	MISC. REVISIONS MADE.	J.CATALANELLO T.TOPE	04-MAR-2011 22-JUN-2011
J	MISC. REVISIONS MADE.	J.CATALANELLO T.TOPE	23-FEB-2011 28-FEB-2011
H	MISC. REVISIONS MADE.	J.CATALANELLO T.TOPE	10-JAN-2011 03-FEB-2011
G	MISC. REVISIONS MADE.	J.CATALANELLO T.TOPE	10-JAN-2011 12-JAN-2012
F	MISC. REVISIONS MADE.	J.CATALANELLO M.ADAMOWSKI	26-FEB-2010 26-FEB-2010
E	MISC. REVISIONS MADE.	J.CATALANELLO	17-NOV-2009 T.TOPE 14-DEC-2009 J.CATALANELLO 17-NOV-2009 T.TOPE 15-JAN-2010
D	MISC. REVISIONS MADE.	J.CATALANELLO T.TOPE	17-NOV-2009 14-DEC-2009
C	MISC. REVISIONS MADE.	J.CATALANELLO R.SCHMITT	23-DEC-2008 06-JAN-2009
B	MOVE CONDENSOR OUTSIDE TANK	J.CATALANELLO R.SCHMITT	07-DEC-2008 10-DEC-2008
A	ADDED TAG NUMBERS TO VALVE TYPES	V. MAJDANSKI R. SCHMITT	25FEB08 26FEB08

LN2 TRAILER #22
4000 GAL MAX
50 PSIG MAX
30-40 PSIG OPERATING

FOR TRAILER DETAILS SEE LN2 TANKER TRAILER FLOW SCHEMATIC DWG #1650-MD-167714, REV "D".

LT 139N, PT 138N, PI 263N, SET @ 15 PSIG, MV-261-N2, PRV-262-N2, FCV-225-N2 (CV=2.0)

SP 140N, PARTICULATE FILTER (200 MESH-74 MICRON), TE 141N, MV-148-N2, MV-142-N2

PI 149N, PSV 150N SET 100 PSIG, PSV 143N SET 100 PSIG

LN2 VAPORIZER 2000 SCFH, TE 146N, TE 145N, S, SV-144-N2

OUTSIDE PC4 | INSIDE PC4

PI 1004 N, PRV 1001-N2, PSV 168 N SET @ 100 PSIG, PT 1010 N, PI 1009 N, MV-1007-N2, PSV 1008 N SET @ 100 PSIG

SP 1001 N, MV-1002-N2, 140 MICRON, MV-1006-N2, MV-1005-N2 SEE NOTE 2, FUTURE USE (PIPE WELDED SHUT) LBNE 35T

PSV 264N SET @ 100 PSIG, MV-285-N2

N2 LIQUID
100 | SHEET 2
N2 TRAILER/LAPD TANK

SP 271N, PI 231N, PSV 209N SET @ 100 PSIG, PARTICULATE 40 MICRON, MV-272-N2

N2 GAS
110 | SHEET 2
N2 TRAILER/N2 PURGES

SP 239N, PARTICULATE 40 MICRON, MV-232-N2

N2 GAS
105 | SHEET 4
N2 TRAILER/ANALYZERS

SP 243N, PARTICULATE 40 MICRON, PI 244N, MV-245-N2 BLEED UP GAS

72 MICRON, SP 240N, CV-151-N2, MV-152-N2

N2, AR, OR AR/H2 GAS
101 | SHEET 3
FILTER GAS SUPPLY/LAPD FILTERS

TRAILER VALVE, PRV 106H, PI 178H, PI 179H, SET @ 100 PSIG PSV 108H

97.5% Ar/2.5% H2 REGENERATION GAS 40,000 SCF

MV-171-HAr, MV-170-HAr, MV-230-HAr

72 MICRON, SP 268H, CV-269-HAr, MV-270-HAr

AR/H2 GAS
109 | SHEET 3
FILTER GAS SUPPLY/LAPD FILTERS

72 MICRON, SP 241H, CV-153-HAr, MV-154-HAr

N2, AR, OR AR/H2 GAS
108 | SHEET 3
FILTER GAS SUPPLY/LAPD FILTERS

MV-233-V

72 MICRON, SP 242A, CV-236-Ar, MV-237-Ar, MV-234-V

SP 246A, PARTICULATE 40 MICRON, PI 247A, MV-248-Ar BLEED UP GAS

301 SPARE, 302 SHEET 3, 303 SHEET 3, 304 SHEET 3, 305 SHEET 2, 306 SHEET 2

MV-251-Ar, MV-252-Ar, MV-253-Ar, MV-254-Ar, MV-255-Ar, MV-256-Ar

PI 250A, PI 266A, MV-249-Ar

INSIDE THE GAS SHED LOCATED OUTSIDE OF PC4

PT 111H, PI 104H, MV-227-HAr, CAPILLARY TUBING

PT 132A, PRV 133A SET @ 65 PSIG, PI 182A, PI 183A, PSV 134A SET @ 100 PSIG, MV-135-Ar, MV-137-Ar, CV-208-Ar, MV-238-Ar

(350 PSIG MAX) H.P. LAr 180 L — ARGON SOURCE #1

GAS USE, FLEX LINE, CV-281-Ar, MV-103-Ar, PRV 110A SET @ 85 PSIG, PSV 114A SET @ 100 PSIG, PI 175A, PI 176A, MV-115-Ar, MV-116-Ar, MV-113-Ar

(350 PSIG MAX) H.P. LAr 180 L — ARGON SOURCE #2

GAS USE, FLEX LINE, CV-282-Ar, MV-102-Ar

(350 PSIG MAX) H.P. LAr 180 L — ARGON SOURCE #3

GAS USE, FLEX LINE, CV-283-Ar, MV-101-Ar

(350 PSIG MAX) H.P. LAr 180 L

GAS USE, FLEX LINE, CV-284-Ar, MV-226-Ar

CAPILLARY TUBING, MV-228-Ar, PT 105A, PI 229A

Ar: FLEX LINE CV-273-Ar, CV-274-Ar, CV-275-Ar, CV-276-Ar; MV-128-Ar, MV-129-Ar, MV-130-Ar, MV-131-Ar

PRV 124A SET @ 75 PSIG, PI 180A, PI 181A, PSV 125A SET @ 100 PSIG, MV-119-Ar, MV-126-Ar, CV-187-Ar, CV-182-Ar

PT 123A, Ar: FLEX LINE CV-277-Ar, CV-278-Ar, CV-279-Ar, CV-280-Ar; MV-119-Ar, MV-120-Ar, MV-121-Ar, MV-122-Ar

PRV 214 AIR SET @ 150 PSIG, PRV 215 AIR SET @ 100 PSIG, PRV 216 AIR SET @ 50 PSIG, PSV 218 AIR SET @ 100 PSIG, MV-213-AIR, PI 217 AIR

AIR: PT 210 AIR, PI 294 AIR, CV-293-AIR, MV-295-AIR; PI 296 AIR, PI 211 AIR, MV-212-AIR, CV-297-AIR

SET @ 5 PSIG, PRV 207A, PI 206A, PI 174A, MV-167-Ar, MV-260-Ar

LOW PRESSURE Ar PURGES

PI 101 FCV-157-Ar, PI 102 FCV-158-Ar, PI 103 FCV-159-Ar, PI 104 FCV-160-Ar, PI (SPARE) FCV-161-Ar, PI (SPARE) FCV-162-Ar

PI 107 FCV-163-Ar, PI (SPARE) FCV-164-Ar, PI (SPARE) FCV-165-Ar, PI (SPARE) FCV-166-Ar, PI 111 FCV-189-Ar, PI (SPARE) FCV-190-Ar

PI 113 FCV-191-Ar, PI 114 FCV-192-Ar, PI 115 FCV-193-Ar, PI 116 FCV-194-Ar, PI (SPARE) FCV-195-Ar, PI 118 FCV-196-Ar

PI 119 FCV-197-Ar, PI 120 FCV-198-Ar, PI 121 FCV-199-Ar, PI 122 FCV-200-Ar, PI 123 FCV-201-Ar, PI 124 FCV-202-Ar

SP 258A, PARTICULATE 40 MICRON, MV-156-Ar, PI 265A, SP 259A, PARTICULATE 40 MICRON

ARGON PURGE GAS
103 | SHEET 2
ARGON SUPPLY/LAPD TANK

ARGON RECIRCULATION MAKEUP GAS
104 | SHEET 3
ARGON SUPPLY/LAPD FILTERS

ARGON SAMPLE GAS
106 | SHEET 4
ARGON SUPPLY/ANALYZER

TANK PRESSURE MAKEUP GAS
107 | SHEET 2
ARGON SUPPLY/LAPD TANK

SP 290 AIR, PARTICULATE, PI 291 AIR, MV-292-AIR

SP 287 AIR, PARTICULATE, PI 288 AIR, MV-289-AIR, MV-286-AIR

OUTSIDE PC4 | INSIDE PC4

Valve locked closed

MV-237-Ar — Closed valves are indicated by the highlight not passing thru the valve.

MV-238-Ar — Open valves are indicated by the highlight passing thru the valve.

Valves locked out in this configuration.

Piping actively pressurized by argon liquid or vapor

Piping actively pressurized by nitrogen liquid or vapor

Piping actively pressurized by Hydrogen/Argon gas

Piping evacuated

Piping actively pressurized by breathable air

NOTES

1. VALVE TO REMAIN LOCKED CLOSED DURING NORMAL LAPD CRYOGENIC OPERATIONS. VALVE MAY ONLY BE UNLOCKED AND OPENED BY A PPD/MD/F&T ENGINEER FOLLOWING A RELEVANT PROCEDURE.
2. VALVE TO REMAIN LOCKED CLOSED DURING LAPD CRYOGENIC OPERATIONS.

Tank gas recirculation procedure schematic

UNLESS OTHERWISE SPECIFIED	ORIGINATOR	R.SCHMITT	26-JUN-2007
	DRAWN	J.CATALANELLO	07-DEC-2007
± ± ±	CHECKED	R.SCHMITT	12-DEC-2007
1. BREAK ALL SHARP EDGES MAX.	APPROVED	R.SCHMITT	12-DEC-2007
2. DO NOT SCALE DRAWING. 3. DIMENSIONS BASED UPON ASME Y14.5M-1994 4. MAX. ALL MACH. SURFACES	USED ON		
5. DRAWING UNITS: U.S. INCH	MATERIAL		

FERMI NATIONAL ACCELERATOR LABORATORY
UNITED STATES DEPARTMENT OF ENERGY

FLARE UTILITIES
GAS PIPING & INSTRUMENT DIAGRAM
LIQUID ARGON PURITY DEMONSTRAT'N

SCALE	DRAWING NUMBER	SHEET	REV
NONE	3942.510-ME-444897	1 OF 4	M

CREATED WITH : Ideas12NXSeries | GROUP: PPD/MECHANICAL DEPARTMENT

Created: 08:12:02 on 18-10-12 (D-M-Y) By: catalan State: 1-INITIAL

Tank gas recirculation procedure schematic

VENTS OUTSIDE

OUTSIDE PC4

INSIDE PC4

N2 LIQUID — 100 — SHEET 1 — N2 TRAILER/LAPD TANK

MV-302-N2

(200 MESH-74 MICRON)

FCV-305-N2 (CV=2.0)

NITROGEN PHASE SEPERATOR

0.8 PSID OPERATING LEVEL HOLDS 25 GALS (95L) 0-100% LEVEL

LT 316N

MV-313-N2 / MV-314-N2 / MV-315-N2

MV-470-N2

PRV 310N SET @ 20 PSIG

PSV 306N SET @ 100 PSIG

PSV 311N SET @ 60 PSIG

PI 309N / PT 307N

PI 303N / PT 304N

MV-482-N2

SP 301N

SV-319-N2 / SV-320-N2 / SV-321-N2 / SV-450-N2

PT 332N / PI 468N

MV-469-N2

PSV 335N SET @ 100 PSIG

TE 493N

MV-333-N2

LPAr P 101

PSV 334A SET @ 60 PSIG

PI 435A

MV-434-Ar

COIL 3: 1100 WATTS

COIL 2: 3300 WATTS

COIL 1: 4400 WATTS

ARGON CONDENSER

LPN2 P 208

MV-466-Ar

MV-489-Ar

MV-465-Ar

MV-372-Ar

ARGON GAS — SHEET 3 — 502 — FILTERS VENTS/GAS VENT

ARGON LIQUID — 302 — SHEET 3 — LAPD CONDENSER/ARGON PUMP

MV-495-N2

CV-494-N2

SP 479N

(200 MESH-74 MICRON)

FCV-312-N2 (CV=0.3)

PSV 317N SET @ 100 PSIG

PRV 378N SET @ 5 PSIG

PI 379N / PI 380N

MV-415-N2

MV-477-N2

N2 GAS — 110 — SHEET 1 — N2 TRAILER/N2 PURGES

201 FCV-382-N2 · 202 FCV-417-N2 · 203 FCV-449-N2 · 204 FCV-451-N2 · 205 FCV-452-N2

206 FCV-453-N2 · 207 FCV-454-N2 · 208 FCV-461-N2 · 209 FCV-664-N2 (SPARE) FCV-682-N2

211 FCV-342-N2 · 212 FCV-344-N2 · 213 FCV-345-N2 · 214 FCV-348-N2 · 215 FCV-349-N2

216 FCV-360-N2 · 217 FCV-366-N2 · 218 FCV-371-N2 · 219 FCV-373-N2 · 220 FCV-374-N2

PSV 329A SET @ 100 PSIG

PSV 497A SET @ 100 PSIG

PI 496A

MV-498-Ar

MV-499-Ar

ARGON LIQUID — 505 — SHEET 3 — LAPD TANK/ARGON PUMP

ARGON GAS — 501 — SHEET 3 — PURITY MONITOR/VENT COMPRESSOR

305 SHEET 1 Ar GAS-85 Psig

SV-351-Ar

PCV 351A

MV-350-Ar

MV-354-Ar

LPAr P 103

PSV 361A SET @ 40 PSIG

MV-458-Ar / MV-460-Ar / MV-341-Ar / MV-343-Ar / MV-457-Ar / MV-347-Ar / MV-353-Ar / MV-351-Ar / MV-436-Ar

PI 460A / PI 358A / PT 359A / PI 362A / PT 363A

MV-459-Ar / MV-461-Ar / MV-462-Ar

PI 463A

VAPOR COMPRESSOR 1
6 SCFM @ 0 PSIG
1 SCFM @ 35 PSIG

MV-364-Ar / MV-464-Ar / MV-438-Ar / MV-437-Ar

ARGON GAS — 301 — SHEET 3 — VENT COMPRESSOR/LAPD FILTERS

SV-432-Ar

306 SHEET 1 Ar GAS-85 Psig

SP 471A — PARTICULATE 40 MICRON

PI 431A

AV 432A

MV-433-Ar / MV-472-Ar

TANK PRESSURE MAKEUP GAS — 107 — SHEET 1 — ARGON SUPPLY/LAPD TANK

LPAr P 102

PSV 377A SET @ 3/0.2 PSIG

LPAr P 122

PSV 491A SET @ 20 PSIG

PI 487A

MV-485-Ar / MV-486-Ar

MV-427-Ar / MV-324-Ar / MV-327-Ar / MV-328-Ar / MV-322-Ar / MV-325-Ar

LIT 323A / LT 326A

(154 IN. H2O MAX) (5.6 PSI MAX)

MV-384-Ar

MV-480-Ar

FO-376-Ar / FO-381-Ar / FO-221-Ar / MV-219-Ar / MV-428-Ar / MV-220-Ar / MV-222-Ar / MV-256-Ar / MV-318-Ar / MV-483-Ar

SP 484A — PARTICULATE

PT 370A / PT 369A

FO-355-1-Ar / FO-355-2-Ar / FO-355-3-Ar / FO-355-4-Ar / FO-355-5-Ar / FO-355-6-Ar / FO-355-7-Ar / FO-355-8-Ar

AE 298A / AE 299A / SC 801

FO-355-9-Ar / FO-355-10-Ar / FO-355-11-Ar / FO-355-12-Ar / FO-383-Ar / FO-429-Ar / FO-430-Ar

VENT AND CONDENSER PORT

TRANSLATING ROD DRIVE

TRANSLATING RTD PORT

PRM PORT

TANK GAS VOLUME 870 ft³

VAPOR SPACE CAPILLARY 22.5° BELOW MAIN FLANGE

2/3 ELEVATION CAPILLARY 80° FROM BOTTOM

1/3 ELEVATION CAPILLARY 40° FROM BOTTOM

LIQUID ARGON 5,875 GAL (22,240L) (785 ft³) 31 TONNES

TE 5 / TE 1 / PRM 1 / TE 6 / TE 412A / TE 2 / TE 419A / TE 7 / TE 3

TE 445A / TE 447A / TE 446A

TPC BIAS / TPC SIGNAL / TPC HV / TPC LCR / RELIEF PORT / PRM PORT

TE 444A / TE 443A / TE 448A

+2.25° LL3, LL4
0 LL2
-8.5° LL1

LONG BO TPC

MAXIMUM LIQUID DEPTH 114.5°

TE 423A / TE 441A

PHASE SEPERATOR

ARGON LIQUID — 500 — SHEET 3 — ARGON FILTERS/LAPD TANK

MV-367-Ar (CONTROL PLUG)

AE 365V H2O

AE 492V / PT 267B H2O

LPN2 P 205

ARGON LIQUID — 300 — SHEET 3 — LAPD TANK/ARGON PUMP

MV-368-Ar

LPN2 P 204

PURITY MONITOR LONG PRM 2

PURITY MONITOR SHORT PRM 4

PURITY MONITOR LONG PRM 3

PURITY MONITOR SHORT PRM 1

HTR 385A / 386A / 387A / 388A / 389A / 390A / 391A / 392A / 393A / 394A / 395A / 396A

HTR 397A / 398A / 399A / 400A / 401A / 402A / 403A / 404A / 405A / 406A / 407A / 408A

TE 409A / 410A / 411A / 413A / 414A / 418A / 420A / 421A / 422A / 439A / 440A / 442A

(25 NOZZLES EACH 3/64 INCH)

TANK WALL HEAT LEAKAGE
2100 WATTS (800L/DAY)
(3.5%/DAY) (1000 SCFH)

FIBERGLASS AND FOAM INSULATION

LPN2 P 201 / LPN2 P 202 / LPN2 P 207 / LPN2 P 206

ARGON GAS — 503 — SHEET 3 — LAPD FILTERS/LAPD TANK

CV-478-Ar / MV-340-Ar

ARGON PURGE GAS — 103 — SHEET 1 — ARGON SUPPLY/LAPD TANK

FC D / FT / FCVE 300A

CV-338-Ar / MV-339-Ar / MV-330-Ar

(INITIAL TANK PURGE 5 SCFM)

Valve locked closed

Closed valves are indicated by the highlight not passing thru the valve.

MV-237-Ar

Open valves are indicated by the highlight passing thru the valve.

MV-238-Ar

Valves locked out in this configuration.

Piping actively pressurized by argon liquid or vapor

Piping actively pressurized by nitrogen liquid or vapor

Piping actively pressurized by Hydrogen/Argon gas

Piping evacuated

UNLESS OTHERWISE SPECIFIED	ORIGINATOR	R.SCHMITT	26-JUN-2007
	DRAWN	J.CATALANELLO	07-DEC-2007
± ± ±	CHECKED	R.SCHMITT	12-DEC-2007
1. BREAK ALL SHARP EDGES MAX.	APPROVED	R.SCHMITT	12-DEC-2007
2. DO NOT SCALE DRAWING. 3. DIMENSIONS BASED UPON ASME Y14.5M-1994 4. MAX. ALL MACH. SURFACES	USED ON		
5. DRAWING UNITS: U.S. INCH	MATERIAL		

FERMI NATIONAL ACCELERATOR LABORATORY
UNITED STATES DEPARTMENT OF ENERGY

FLARE UTILITIES
GAS PIPING & INSTRUMENT DIAGRAM
LIQUID ARGON PURITY DEMONSTRAT'N

SCALE	DRAWING NUMBER	SHEET	REV
NONE	3942.510-ME-444897	2 OF 4	M

CREATED WITH : Ideas12NXSeries | GROUP: PPD/MECHANICAL DEPARTMENT

version 11.13.12 page 33

Created: 08:12:10 on 18-10-12 (D-M-Y) By: catalan State: 1-INITIAL

Tank gas recirculation procedure schematic

N2,Ar, OR Ar/H2 GAS
108 SHEET 1
FILTER GAS SUPPLY/LAPD FILTERS

Ar/H2 GAS
109 SHEET 1
FILTER GAS SUPPLY/LAPD FILTERS

N2, AR, OR Ar/H2 GAS
101 SHEET 1
FILTER GAS SUPPLY/LAPD FILTERS

ARGON GAS
SHEET 2 502
FILTER VENTS/GAS VENT

ARGON GAS
SHEET 2 501
PURITY MONITOR/VENT COMPRESSOR

ARGON GAS
SHEET 2 503
LAPD FILTERS/LAPD TANK

ARGON LIQUID
SHEET 2 500
ARGON FILTERS/LAPD TANK

ARGON GAS
301 SHEET 2
VENT COMPRESSOR/LAPD FILTERS

ARGON RECIRCULATION MAKEUP GAS
104 SHEET 1
ARGON SUPPLY/LAPD FILTERS

ARGON LIQUID
SHEET 2 505
LAPD TANK/ARGON PUMP

ARGON LIQUID
302 SHEET 2
LAPD CONDENSER/ARGON PUMP

ARGON LIQUID
300 SHEET 2
LAPD TANK/ARGON PUMP

MV-710-HAr
FCV-711-HAr
AE 702H
FCV-713-HAr
FCV-709-HAr
MV-712-HAr
MV-708-HAr
PI 707H
AE 566H H2O
AE 576H H2O
MV-687-HAr (DRAIN)
MV-686-HAr (DRAIN)
VENT OUTSIDE
VENT OUTSIDE
INSIDE PC4
OUTSIDE PC4

SV-562-Ar
303 SHEET 1
Ar GAS-85 Psig
FCV 562A

PI 715H
MV-716-HAr
SV-706-HAr
FCV-714-HAr
PI 533H
PT 534H
FCV-592-HAr
SP 473H
PARTICULATE 5 MICRON
SV-705-HAr
(1200W, 2.3 SCFM MIN FLOW)
PI 684H
HTR 612H
TE 635H
TE 636H
TE 637H
MV-535-HAr
700 SCFH Ar FLOW TYPICAL
MV-685-HAr
HTR 634H
TE 638H
TE 639H
TE 640H
(1200W, 2.3 SCFM MIN FLOW)
MV-539-HAr SEE NOTE 1

PI 589A
PT 590A
LPAr 111
LT 586A
PSV 587A SET @ 100 PSIG
MV-694-Ar SEE NOTE 1
MV-560-Ar

LPAr 113
PSV 615A SET @ 100 PSIG
PSV-696-Ar SET @ 100 PSIG
MV-695-Ar
MV-692-Ar
MV-691-Ar
PT 704A
PI 673A
MV-675-Ar
VACUUM BREAK
FUTURE USE LBNE 35T
MV-5002-Ar SEE NOTE 2
SP 476A
PARTICULATE 15 MICRON
VACUUM BREAK

MV-593-Ar
INLINE PURITY MONITOR LONG 14L 26.9 INCH OPERATING LEVEL
PRM
SET @ 0 PSIG PSV 672V
302 SHEET 1
Ar GAS-85 Psig
SV-557-Ar
FO-722-Ar
AV-557-Ar

LPAr 114
PSV 683A SET @ 100 PSIG
PI 678A
PT 703A
MV-677-Ar
(CONTROL PLUG)
MV-674-Ar
MV-559-Ar SEE NOTE 1

SP 721A
PARTICULATE 15 MICRON
MV-667-Ar
MV-676-Ar

TE 574H
PT 570A
PI 571A
OXYGEN FILTER TO GAS ANALYZERS
SC 806
LPAr 120
PSV 568A SET @ 100 PSIG
SET @ 0 PSIG PSV 671V
MV-513-HAr
MV-572-Ar
MV-569-Ar
MV-565-HAr
VACUUM BREAK
MV-554-Ar
PT 669V
TE 626A
TE 627A
TE 628A
TE 629A
TE 630A
77L
COPPER

TE 542A
PT 603A
PI 604A
MOLE SIEVE TO GAS ANALYZERS
SC 807
LPAr 124
PSV 601A SET @ 100 PSIG
SET @ 0 PSIG PSV 670V
MV-540-Ar
MV-541-Ar
MV-602-Ar
MV-573-HAr
VACUUM BREAK
PT 668V
TE 621A
TE 622A
TE 623A
TE 624A
TE 625A
77L
MOLE SIEVE

VACUUM BREAK
(CONTROL PLUG)
MV-553-Ar
MV-549-Ar
MV-681-Ar
PI 680A
SP 474A
PARTICULATE 20 MICRON
PSV 548A SET @ 100 PSIG
PI 545A
SC 808
PSV 543A SET @ 100 PSIG
SP 620A
MV-544-Ar
(200 MESH-72 MICRON)
MV-547-Ar
LAr TRUCK CONNECTION MAX OPERATING SUPPLY PRESSURE 70 PSIG
USED FOR FILLING & SPECIAL NEED ONLY. TRAILER PUMP MUST BE LOCKED OUT DURING FILL.
NOTE:
SEE DWG#489659 FOR DETAILS OF FERMILAB LAr TRAILER

PI 551A
PI 552A
LPAr 115
PSV 531A SET @ 100 PSIG
MV-550-Ar
CV-532-Ar
MV-610-Ar
MV-527-Ar
MV-609-Ar
CV-607-Ar
MV-608-Ar
FCVE 606A
FC D
FT
(29.6 SCFH Ar MAX)

VACUUM BREAK
(CONTROL PLUG)
MV-516-Ar FILTER BYPASS

LAr VAPORIZER
PI 697A
TE 611A
TS 700A
HTR 701A
SET @ 100 PSIG PSV 693A
SV-699-Ar
(30KW, 7,500 SCFH)
VENTS OUTSIDE
FLEXIBLE HOSE
FLEXIBLE HOSE

LPAr 121
PSV 500A SET @ 100 PSIG
PI 653A
MV-654-Ar
LPAr 123
PSV 517A SET @ 100 PSIG
PI 655A
MV-563-Ar
MV-633-Ar SEE NOTE 1
LPAr 104
PSV 650A SET @ 100 PSIG
PI 651A
MV-652-Ar
SV-501-Ar
304 SHEET 1
Ar GAS-85 Psig
AV 501A
MV-502-Ar
CONDENSER RETURN
2" SCH 10 INNER PIPE
PURIFICATION AUTO SHUTOFF
FLEXIBLE HOSE
TO LAr VAPORIZER

DPT 656A
PI 657A
MV-658-Ar
MV-659-Ar
MV-660-Ar
SP 475A
MV-717-Ar
PARTICULATE (234 MICRON)
PI 509A
PI 510A
MV-508-Ar
DPT 507A
SC 504A
M
PT 505A
TE 662A
MV-506-Ar
PSV-666-V (0 PSIG)
MV-511-Ar
SC 805
MV-512-Ar
MV-514-Ar
VACUUM BREAK
LIQUID PUMP (12.5 GPM AT 50.7 PSID AND 5700 RPM) (8 HR TIME CONSTANT) (5000 HR BEARING LIFE) (6300 RPM MAX AT 105HZ)
MV-5001-Ar SEE NOTE 2
VACUUM BREAK
FUTURE USE LBNE 35T

LPAr 107
PSV 663A SET @ 100 PSIG
MV-718-Ar
MV-661-Ar SEE NOTE 2
LPAr 119
PSV 720A SET @ 100 PSIG
MV-719-Ar
PI 698A
FLEXIBLE HOSE
LPAr 118
PSV 598A SET @ 100 PSIG
PI 690A
MV-689-Ar
MV-688-Ar
MV-599-Ar 1" SCH 10 INNER PIPE
LPAr 116
PSV 564A SET @ 100 PSIG
MV-597-Ar
PI 665A
MV-594-Ar
FT
FT-595-Ar
MV-596-Ar
LPN2 209
FOAM INSULATION

INSIDE PC4
OUTSIDE PC4

MV-237-Ar — Closed valves are indicated by the highlight not passing thru the valve.
MV-238-Ar — Open valves are indicated by the highlight passing thru the valve.
Valves locked out in this configuration.
Piping actively pressurized by argon liquid or vapor
Piping actively pressurized by nitrogen liquid or vapor
Piping actively pressurized by Hydrogen/Argon gas
Piping evacuated
Valve locked closed

NOTES
1. VALVE TO REMAIN LOCKED CLOSED DURING NORMAL LAPD CRYOGENIC OPERATIONS. VALVE MAY ONLY BE UNLOCKED AND OPENED BY A PPD/MD/F&T ENGINEER FOLLOWING A RELEVANT PROCEDURE.
2. VALVE TO REMAIN LOCKED CLOSED DURING LAPD CRYOGENIC OPERATIONS.

UNLESS OTHERWISE SPECIFIED	ORIGINATOR	R.SCHMITT	26-JUN-2007
	DRAWN	J.CATALANELLO	07-DEC-2007
± ± ±	CHECKED	R.SCHMITT	12-DEC-2007
1. BREAK ALL SHARP EDGES MAX.	APPROVED	R.SCHMITT	12-DEC-2007
2. DO NOT SCALE DRAWING. 3. DIMENSIONS BASED UPON ASME Y14.5M-1994 4. MAX. ALL MACH. SURFACES	USED ON		
5. DRAWING UNITS: U.S. INCH	MATERIAL		

FERMI NATIONAL ACCELERATOR LABORATORY
UNITED STATES DEPARTMENT OF ENERGY

FLARE UTILITIES
GAS PIPING & INSTRUMENT DIAGRAM
LIQUID ARGON PURITY DEMONSTRAT'N

SCALE	DRAWING NUMBER	SHEET	REV
NONE	3942.510-ME-444897	3 OF 4	M

CREATED WITH : Ideas12NXSeries | GROUP: PPD/MECHANICAL DEPARTMENT

version 11.13.12 page 34

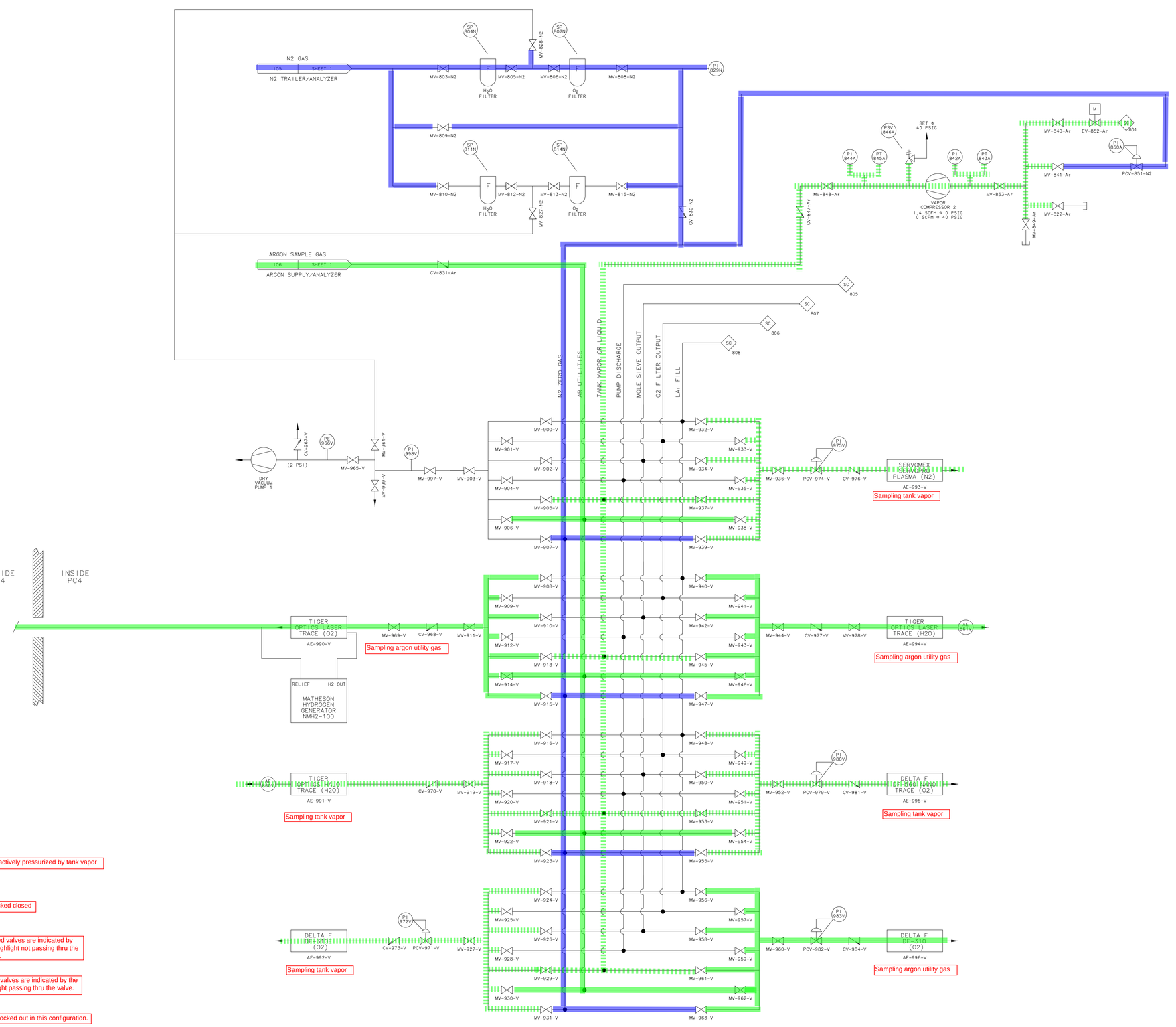

Piping actively pressurized by tank vapor

Valve locked closed

MV-237-Ar — Closed valves are indicated by the highlight not passing thru the valve.

MV-238-Ar — Open valves are indicated by the highlight passing thru the valve.

Valves locked out in this configuration.

Piping actively pressurized by argon liquid or vapor

Piping actively pressurized by nitrogen liquid or vapor

Piping actively pressurized by Hydrogen/Argon gas

Piping evacuated

Tank gas recirculation procedure schematic

UNLESS OTHERWISE SPECIFIED	ORIGINATOR	R.SCHMITT	26-JUN-2007
	DRAWN	J.CATALANELLO	07-DEC-2007
± ± ±	CHECKED	R.SCHMITT	12-DEC-2007
1. BREAK ALL SHARP EDGES MAX.	APPROVED	R.SCHMITT	12-DEC-2007
2. DO NOT SCALE DRAWING. 3. DIMENSIONS BASED UPON ASME Y14.5M-1994 4. MAX. ALL MACH. SURFACES	USED ON		
5. DRAWING UNITS: U.S. INCH	MATERIAL		

FERMI NATIONAL ACCELERATOR LABORATORY
UNITED STATES DEPARTMENT OF ENERGY

FLARE UTILITIES
GAS PIPING & INSTRUMENT DIAGRAM
LIQUID ARGON PURITY DEMONSTRAT'N

SCALE	DRAWING NUMBER	SHEET	REV
NONE	3942.510-ME-444897	4 OF 4	M

CREATED WITH : Ideas12NXSeries | GROUP: PPD/MECHANICAL DEPARTMENT

version 11.13.12 page 35

6a - Tank filling procedure – *warm fill*

A PPD engineer must be present for the entire fill procedure. Prior to the fill preparations should be made for 24 hours of engineer shift coverage. The fill process consists of connecting a vendor's liquid argon trailer to the system and passing the liquid argon thru the filters on its way to the tank. Prior to the liquid fill the tank will be full of clean argon gas.

1. The following PLC loops should be active:
    a. AV-432-Ar – argon makeup gas to avoid tank vacuum
    b. PCV-351-Ar – tank vent to avoid tank over pressure
    c. AV-225-N2 – nitrogen supply shut-off in the event of PC4 ODH
    d. Compressor #1 - shutoff to avoid tank vacuum
    e. Compressor #2 - shutoff to avoid tank vacuum
    f. Vacuum pump #1 – shuts off to avoid tank vacuum
    g. AV-557-Ar – manually controlled by operator at PLC during fill
    h. FCVE-606-Ar – provides argon makeup gas to replace the argon gas sent to the gas analyzers to maintain tank at 2 psig.
2. Configure all valves as shown in the attached highlighted schematic.
3. Maintain the gas recirculation while the liquid argon fill line is prepared.
4. Positively lock out any liquid pumps on the vendor liquid argon supply trailer. A liquid pump must not be used to transfer the liquid argon under any circumstance.
5. Verify the set point of the supply trailer back pressure regulator (relieving regulator). The set point must be 70 psig or less. If necessary adjust the set point so that its below 70 psig. After adjustment observe that the back pressure regulator keeps the supply trailer vapor pressure under 70 psig.
6. Lock open any isolation valves between the supply trailer and the back pressure regulator if the supply trailer MAWP is > 70 psig.
7. Adjust the supply trailer pressure building loop regulator to a set point that is at least 10 psig less than the back pressure regulator set point. Observe its performance to ensure that the pressure building regulator does not fight the back pressure regulator. Once performance is satisfactory lock the pressure building loop isolation valves closed if the supply trailer MAWP is > 70 psig. If at any time during the fill the supply trailer vapor pressure is insufficient, only the engineer attending the fill may open pressure building loop if the supply trailer MAWP is > 70 psig. The engineer must attend the trailer while the pressure building loop is open and then lock closed the loop when the supply trailer vapor pressure is again sufficient if the supply trailer MAWP is > 70 psig.
8. If at anytime the supply trailer vapor pressure exceeds 70 psig, the supply trailer must be isolated at its liquid withdrawal. Steps are then to be taken to lower the supply trailer vapor pressure as determined by the attending engineer.
9. Connect the liquid argon supply trailer to the liquid argon supply line.
10. Verify that MV-549-Ar is closed.

11. Verify that MV-900-V, MV-932-V, MV-908-V, MV-940-V, MV-916-V, MV-948-V, MV-924-V, MV-956-V are closed.
12. Unplug MV-681-Ar and connect a dry roughing vacuum pump to MV-681-Ar.
13. Open MV-544-Ar.
14. Open MV-681-Ar.
15. Evacuate the liquid argon fill line between the supply trailer isolation valve and MV-549-Ar.
16. Close MV-681-Ar to isolate the vacuum pump.
17. Back fill the liquid argon supply line by opening the liquid argon supply trailer isolation valve and pressurize to a few pisg as indicated on PI-545-Ar and close the supply trailer isolation valve.
18. Repeat previous 4 steps five times.
19. Open the supply trailer isolation valve to pressurize the liquid argon supply line up to the supply trailer pressure.
20. Disconnect the dry roughing vacuum pump and plug MV-681-Ar.
21. Close MV-929-V.
22. Open MV-924-V so that the DF-310E oxygen analyzer AE-992-V analyzes the LAr supply gas.
23. Close MV-946-V.
24. Open MV-940-V so that the LaserTrace water analyzer AE-994-V analyzes the LAr supply gas.
25. Close MV-937-V and open MV-932-V so that the Servomex nitrogen analyzer AE-993-V analyzes the LAr supply gas.
26. Wait for AE-992-V to indicate less than 1 PPM oxygen.
27. Once 1 ppm oxygen is reached turn off compressor #1 in the PLC.
28. Turn off FCVE-606-Ar flow control loops.
29. Close MV-675-Ar, MV-608-Ar, MV-610-Ar, MV-436-Ar, MV-464-Ar, MV-340-Ar.
30. Open MV-549-Ar
31. Close MV-914-V.
32. Open MV-909-V so that the LaserTrace oxygen analyzer AE-990-V analyzers oxygen filter output gas.
33. Open MV-367-Ar very slowly to provide gas flow to the tank. Provide enough flow to increase the pressure observed on PI-487-Ar slowly.
34. Slowly open MV-367-Ar to cool down the tank. Monitor the tank pressure on PI-487-Ar and adjust MV-367-Ar accordingly.
35. Monitor liquid accumulation by observing LIT-323-Ar and LT-326-Ar.
36. One supply trailer cannot over fill a warm tank. When the trailer is empty close MV-549-Ar.
37. Close MV-909-V.
38. Open MV-914-V so that the LaserTrace oxygen analyzer AE-990-V analyzes argon utility gas.
39. Close MV-932-V and open MV-937-V so that the Servomex nitrogen analyzer AE-993-V analyzes the tank vapor.
40. Close MV-924-V.

41. Open MV-929-V so that the DF-310E oxygen analyzer AE-992-V analyzes the tank vapor.
42. Allow the remaining liquid in the piping to vent thru the tank.
43. Close MV-367-Ar to isolate the tank.
44. Close the liquid argon supply trailer isolation valve.
45. Open MV-547-Ar to vent the fill line.
46. When the fill line has warmed to ambient disconnect the fill hose and close MV-547-Ar
47. Proceed to the “Tank refrigeration procedure.”

REV	DESCRIPTION	DRAWN	DATE
M	MISC. REVISIONS MADE.	J.CATALANELLO	22-MAY-2012
F	MISC. REVISIONS MADE.	J.CATALANELLO	26-FEB-2010
		M.ADAMOWSKI	26-FEB-2010
G	MISC. REVISIONS MADE.	J.CATALANELLO	10-JAN-2011
		T.TOPE	12-JAN-2012
H	MISC. REVISIONS MADE.	J.CATALANELLO	10-JAN-2011
		T.TOPE	03-FEB-2011
J	MISC. REVISIONS MADE.	J.CATALANELLO	23-FEB-2011
		T.TOPE	28-FEB-2011
K	MISC. REVISIONS MADE.	J.CATALANELLO	04-MAR-2011
		T.TOPE	22-JUN-2011
L	MISC. REVISIONS MADE.	J.CATALANELLO	11-JUL-2011
		T.TOPE	01-MAR-2012
A	ADDED TAG NUMBERS TO VALVE TYPES	V. MAJDANSKI	25FEB08
		R. SCHMITT	26FEB08
B	MOVE CONDENSOR OUTSIDE TANK	J.CATALANELLO	07-DEC-2008
		R.SCHMITT	10-DEC-2008
C	MISC. REVISIONS MADE.	J.CATALANELLO	23-DEC-2008
		R.SCHMITT	06-JAN-2009
D	MISC. REVISIONS MADE.	J.CATALANELLO	17-NOV-2009
		T.TOPE	14-DEC-2009
E	MISC. REVISIONS MADE.	J.CATALANELLO	17-NOV-2009
		T.TOPE	15-JAN-2010

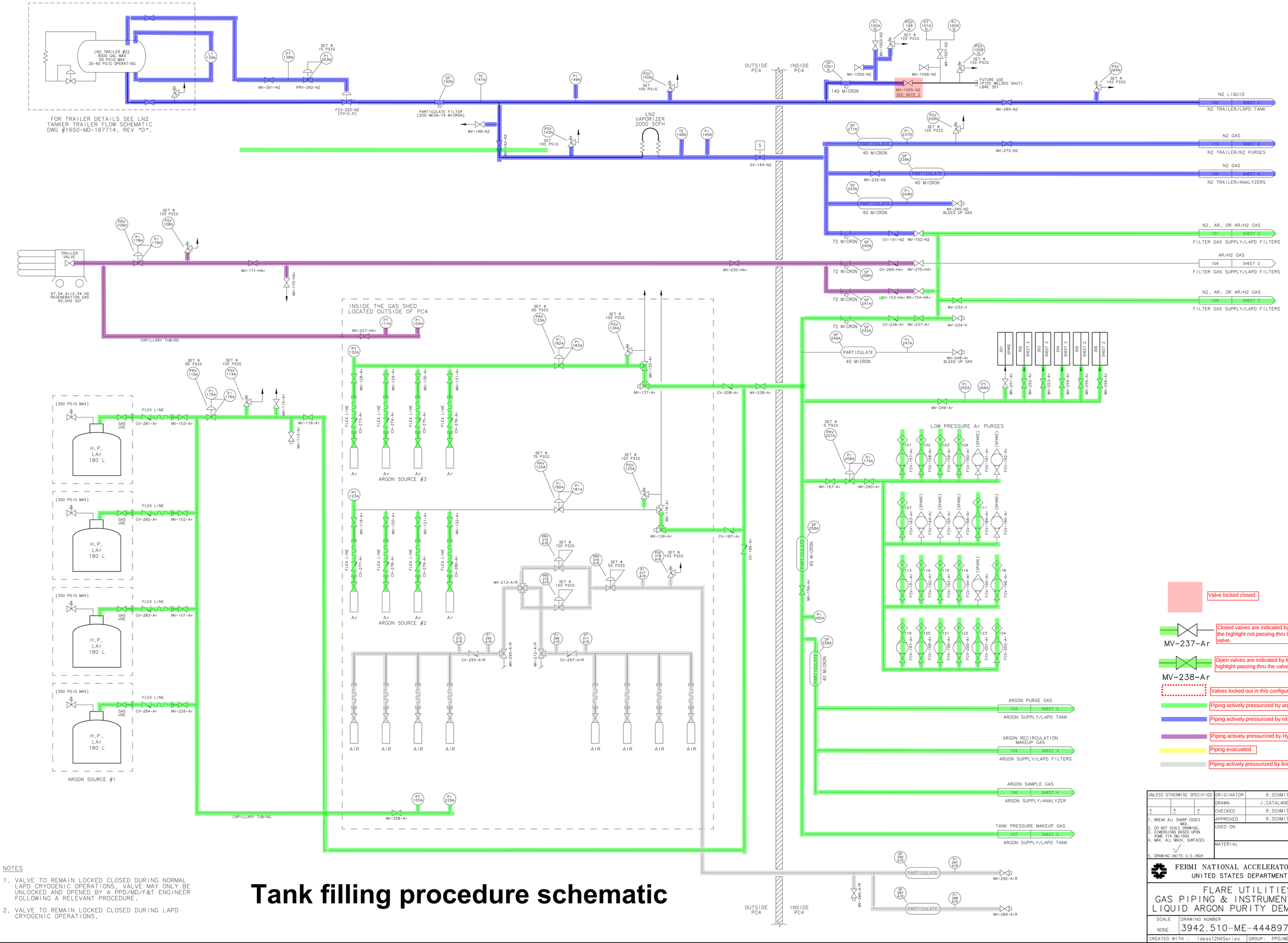

Valve locked closed

MV-237-Ar — Closed valves are indicated by the highlight not passing thru the valve.

MV-238-Ar — Open valves are indicated by the highlight passing thru the valve.

Valves locked out in this configuration.

Piping actively pressurized by argon liquid or vapor

Piping actively pressurized by nitrogen liquid or vapor

Piping actively pressurized by Hydrogen/Argon gas

Piping evacuated

Piping actively pressurized by breathable air

NOTES

1. VALVE TO REMAIN LOCKED CLOSED DURING NORMAL LAPD CRYOGENIC OPERATIONS. VALVE MAY ONLY BE UNLOCKED AND OPENED BY A PPD/MD/F&T ENGINEER FOLLOWING A RELEVANT PROCEDURE.
2. VALVE TO REMAIN LOCKED CLOSED DURING LAPD CRYOGENIC OPERATIONS.

Tank filling procedure schematic

UNLESS OTHERWISE SPECIFIED	ORIGINATOR	R.SCHMITT	26-JUN-2007
	DRAWN	J.CATALANELLO	07-DEC-2007
± ± ±	CHECKED	R.SCHMITT	12-DEC-2007
1. BREAK ALL SHARP EDGES MAX.	APPROVED	R.SCHMITT	12-DEC-2007
2. DO NOT SCALE DRAWING. 3. DIMENSIONS BASED UPON ASME Y14.5M-1994 4. MAX. ALL MACH. SURFACES	USED ON		
5. DRAWING UNITS: U.S. INCH	MATERIAL		

FERMI NATIONAL ACCELERATOR LABORATORY
UNITED STATES DEPARTMENT OF ENERGY

FLARE UTILITIES
GAS PIPING & INSTRUMENT DIAGRAM
LIQUID ARGON PURITY DEMONSTRAT'N

SCALE	DRAWING NUMBER	SHEET	REV
NONE	3942.510-ME-444897	1 OF 4	M

CREATED WITH : Ideas12NXSeries | GROUP: PPD/MECHANICAL DEPARTMENT

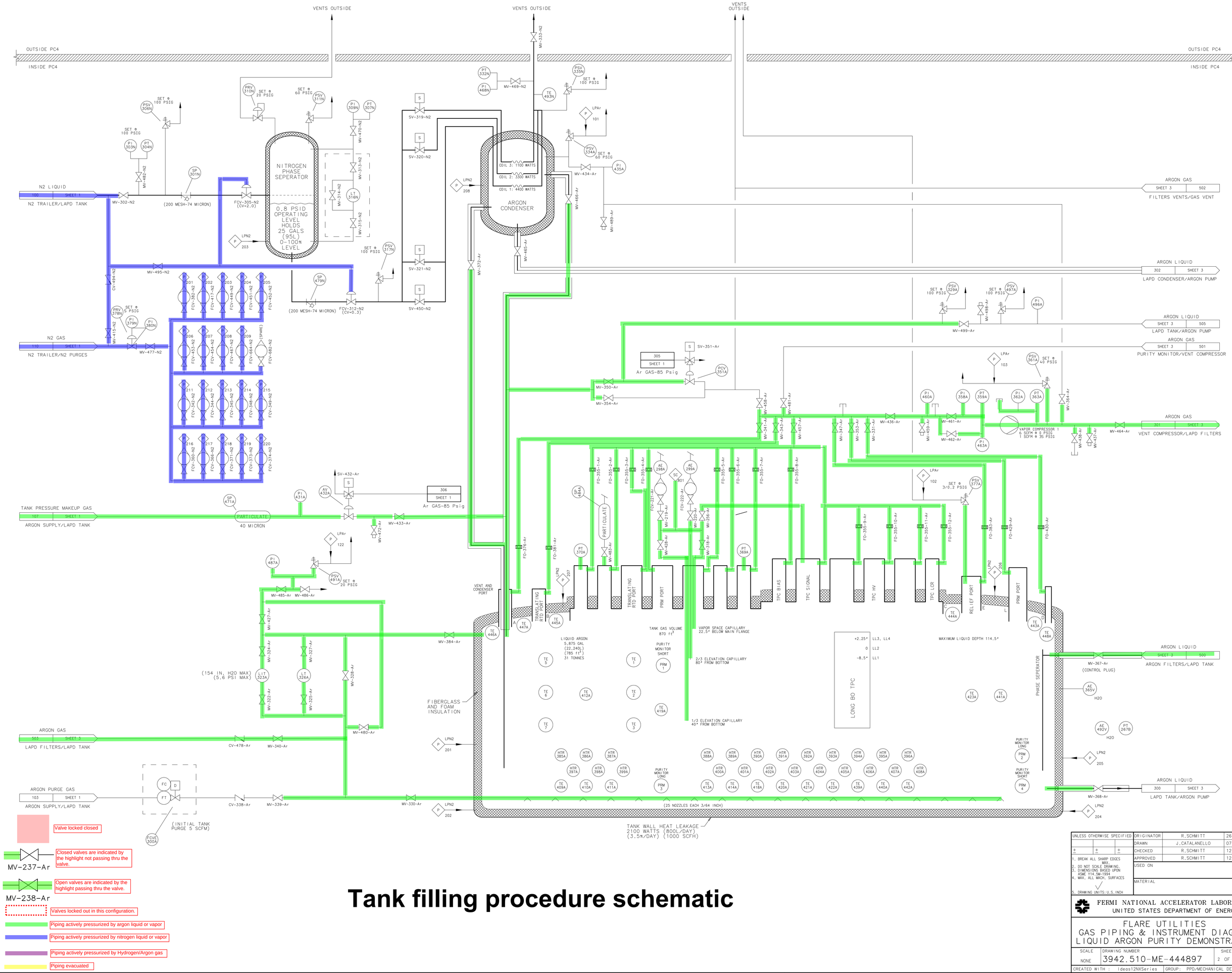

Tank filling procedure schematic

UNLESS OTHERWISE SPECIFIED	ORIGINATOR	R.SCHMITT	26-JUN-2007
	DRAWN	J.CATALANELLO	07-DEC-2007
± ± ±	CHECKED	R.SCHMITT	12-DEC-2007
1. BREAK ALL SHARP EDGES MAX.	APPROVED	R.SCHMITT	12-DEC-2007
2. DO NOT SCALE DRAWING. 3. DIMENSIONS BASED UPON ASME Y14.5M-1994 4. MAX. ALL MACH. SURFACES	USED ON		
5. DRAWING UNITS: U.S. INCH	MATERIAL		

FERMI NATIONAL ACCELERATOR LABORATORY
UNITED STATES DEPARTMENT OF ENERGY

FLARE UTILITIES
GAS PIPING & INSTRUMENT DIAGRAM
LIQUID ARGON PURITY DEMONSTRAT'N

SCALE	DRAWING NUMBER	SHEET	REV
NONE	3942.510-ME-444897	2 OF 4	M

CREATED WITH : Ideas12NXSeries | GROUP: PPD/MECHANICAL DEPARTMENT

version 11.13.12 page 40

Tank filling procedure schematic

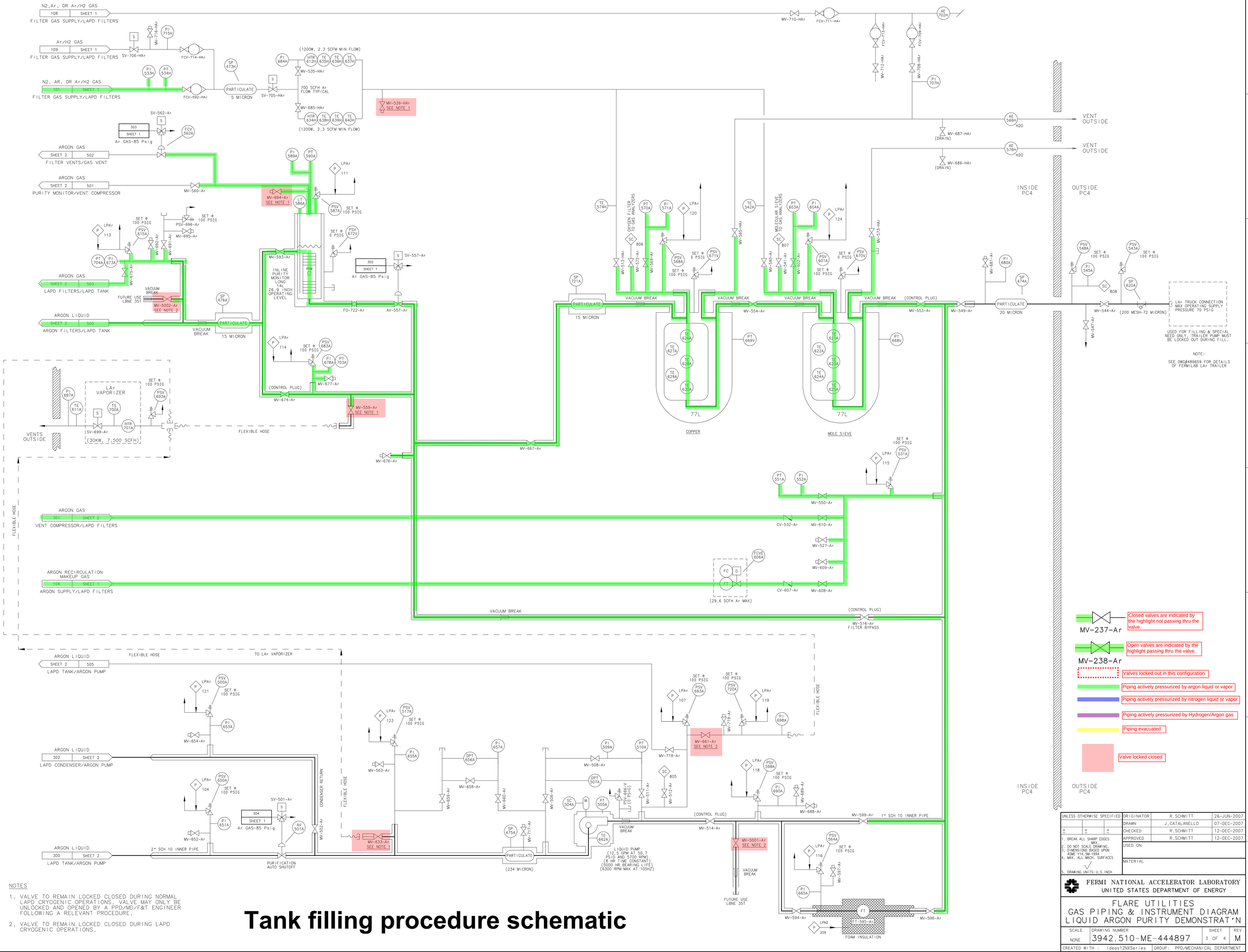

NOTES

1. VALVE TO REMAIN LOCKED CLOSED DURING NORMAL LAPD CRYOGENIC OPERATIONS. VALVE MAY ONLY BE UNLOCKED AND OPENED BY A PPD/MD/F&T ENGINEER FOLLOWING A RELEVANT PROCEDURE.
2. VALVE TO REMAIN LOCKED CLOSED DURING LAPD CRYOGENIC OPERATIONS.

UNLESS OTHERWISE SPECIFIED			ORIGINATOR	R.SCHMITT	26-JUN-2007
			DRAWN	J.CATALANELLO	07-DEC-2007
±	±	±	CHECKED	R.SCHMITT	12-DEC-2007
1. BREAK ALL SHARP EDGES MAX.			APPROVED	R.SCHMITT	12-DEC-2007
2. DO NOT SCALE DRAWING.			USED ON		
3. DIMENSIONS BASED UPON ASME Y14.5M-1994					
4. MAX. ALL MACH. SURFACES			MATERIAL		
5. DRAWING UNITS: U.S. INCH					

FERMI NATIONAL ACCELERATOR LABORATORY
UNITED STATES DEPARTMENT OF ENERGY

FLARE UTILITIES
GAS PIPING & INSTRUMENT DIAGRAM
LIQUID ARGON PURITY DEMONSTRAT'N

SCALE	DRAWING NUMBER	SHEET	REV
NONE	3942.510-ME-444897	3 OF 4	M

CREATED WITH : Ideas12NXSeries | GROUP: PPD/MECHANICAL DEPARTMENT

version 11.13.12 page 41

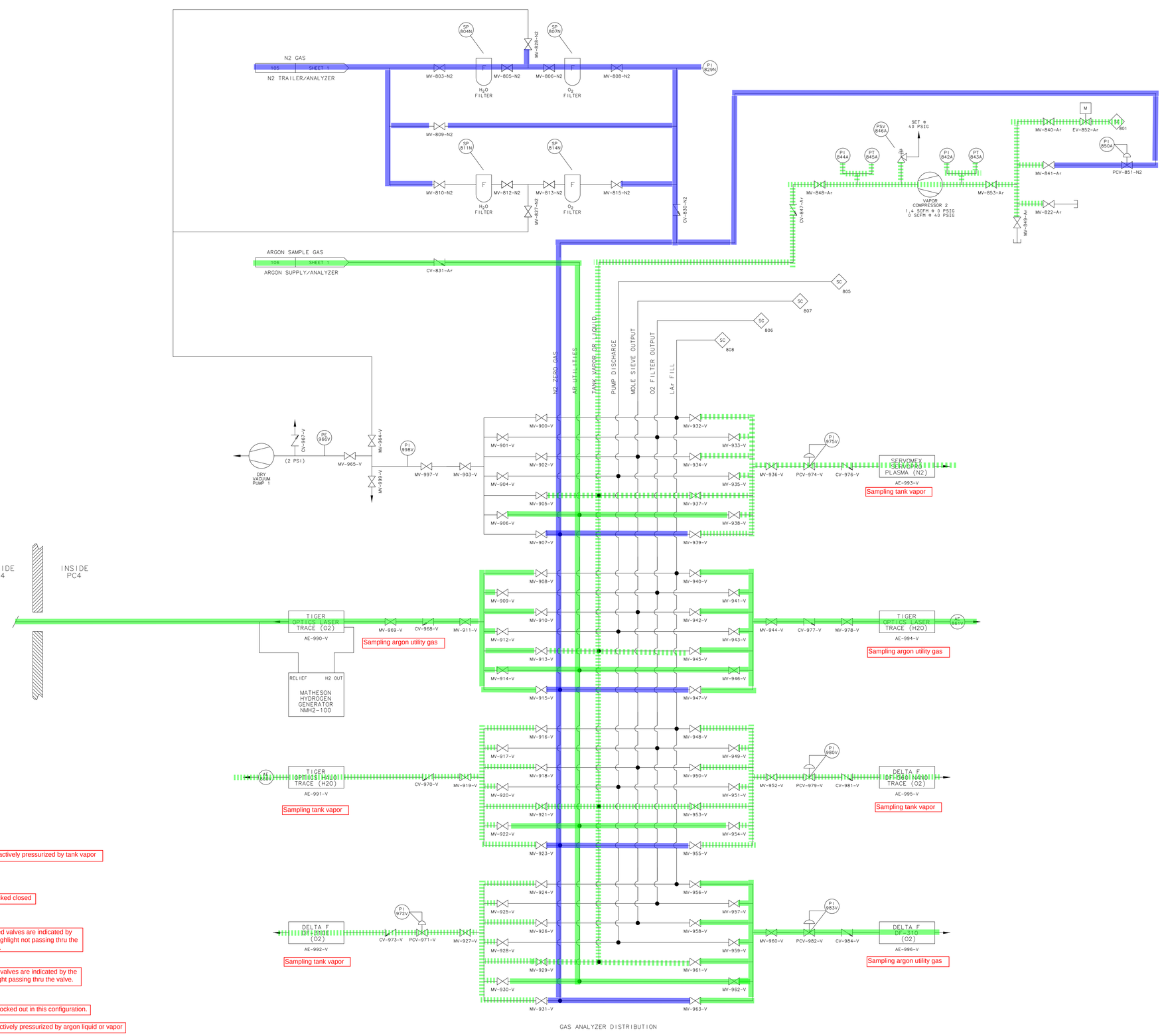

Piping actively pressurized by tank vapor

Valve locked closed

MV-237-Ar — Closed valves are indicated by the highlight not passing thru the valve.

MV-238-Ar — Open valves are indicated by the highlight passing thru the valve.

Valves locked out in this configuration.

Piping actively pressurized by argon liquid or vapor

Piping actively pressurized by nitrogen liquid or vapor

Piping actively pressurized by Hydrogen/Argon gas

Piping evacuated

Tank filling procedure schematic

UNLESS OTHERWISE SPECIFIED	ORIGINATOR	R.SCHMITT	26-JUN-2007
	DRAWN	J.CATALANELLO	07-DEC-2007
± ± ±	CHECKED	R.SCHMITT	12-DEC-2007
1. BREAK ALL SHARP EDGES MAX.	APPROVED	R.SCHMITT	12-DEC-2007
2. DO NOT SCALE DRAWING. 3. DIMENSIONS BASED UPON ASME Y14.5M-1994 4. MAX. ALL MACH. SURFACES	USED ON		
5. DRAWING UNITS: U.S. INCH	MATERIAL		

FERMI NATIONAL ACCELERATOR LABORATORY
UNITED STATES DEPARTMENT OF ENERGY

FLARE UTILITIES
GAS PIPING & INSTRUMENT DIAGRAM
LIQUID ARGON PURITY DEMONSTRAT'N

SCALE	DRAWING NUMBER	SHEET	REV
NONE	3942.510-ME-444897	4 OF 4	M

CREATED WITH : Ideas12NXSeries | GROUP: PPD/MECHANICAL DEPARTMENT

version 11.13.12 page 42

6b - Tank filling procedure – *cold fill*

A PPD engineer must be present for the entire fill procedure. Prior to the fill preparations should be made for 24 hours of engineer shift coverage. The fill process consists of connecting a vendor's liquid argon trailer to the system and passing the liquid argon thru the filters on its way to the tank. Prior to the liquid fill the tank will already contain liquid argon.

1. The following PLC loops should be active:
    a. AV-432-Ar – argon makeup gas to avoid tank vacuum
    b. PCV-351-Ar – tank vent to avoid tank over pressure
    c. AV-225-N2 – nitrogen supply shut-off in the event of PC4 ODH
    d. Compressor #1 - shutoff to avoid tank vacuum
    e. Compressor #2 - shutoff to avoid tank vacuum
    f. Vacuum pump #1 – shuts off to avoid tank vacuum
    g. AV-557-Ar – manually controlled by operator at PLC during fill
2. Prior to adding additional liquid argon to a tank already containing liquid argon the system should be in the state reached at the end of procedure 7 or procedure 8. The system can stay in either of these states until this procedure requires changing that state.
3. Positively lock out any liquid pumps on the vendor liquid argon supply trailer. A liquid pump must not be used to transfer the liquid argon under any circumstance.
4. Verify the set point of the supply trailer back pressure regulator (relieving regulator). The set point must be 70 psig or less. If necessary adjust the set point so that its below 70 psig. After adjustment observe that the back pressure regulator keeps the supply trailer vapor pressure under 70 psig.
5. Lock open any isolation valves between the supply trailer and the back pressure regulator if the supply trailer MAWP is > 70 psig.
6. Adjust the supply trailer pressure building loop regulator to a set point that is at least 10 psig less than the back pressure regulator set point. Observe its performance to ensure that the pressure building regulator does not fight the back pressure regulator. Once performance is satisfactory lock the pressure building loop isolation valves closed if the supply trailer MAWP is > 70 psig. If at any time during the fill the supply trailer vapor pressure is insufficient, only the engineer attending the fill may open pressure building loop. The engineer must attend the trailer while the pressure building loop is open and then lock closed the loop when the supply trailer vapor pressure is again sufficient if the supply trailer MAWP is > 70 psig.
7. If at anytime the supply trailer vapor pressure exceeds 70 psig, the supply trailer must be isolated at its liquid withdrawal. Steps are then to be taken to lower the supply trailer vapor pressure as determined by the attending engineer.
8. Connect the liquid argon supply trailer to the liquid argon supply line.
9. Verify that MV-549-Ar is closed.

10. Verify that MV-900-V, MV-932-V, MV-908-V, MV-940-V, MV-916-V, MV-948-V, MV-924-V, MV-956-V are closed.
11. Unplug MV-681-Ar and connect a dry roughing vacuum pump to MV-681-Ar.
12. Open MV-544-Ar.
13. Open MV-681-Ar.
14. Evacuate the liquid argon fill line between the supply trailer isolation valve and MV-549-Ar.
15. Close MV-681-Ar to isolate the vacuum pump.
16. Back fill the liquid argon supply line by opening the liquid argon supply trailer isolation valve and pressurize to a few psig as indicated on PI-545-Ar and close the supply trailer isolation valve.
17. Repeat previous 4 steps five times.
18. Open the supply trailer isolation valve to pressurize the liquid argon supply line up to the supply trailer pressure.
19. Disconnect the dry roughing vacuum pump and plug MV-681-Ar.
20. Close MV-929-V.
21. Open MV-924-V so that the DF-310E oxygen analyzer AE-992-V analyzes the LAr supply gas.
22. Close MV-946-V.
23. Open MV-940-V so that the LaserTrace water analyzer AE-994-V analyzes the LAr supply gas.
24. Close MV-937-V and open MV-932-V so that the Servomex nitrogen analyzer AE-993-V analyzes the LAr supply gas.
25. Wait for AE-992-V to indicate less than 1 PPM oxygen.
26. Turn off the liquid pump (if on) and turn off the tank refrigeration.
27. Configure the system valves as shown in the “Tank filling (cold) procedure schematic”.
28. Open MV-549-Ar
29. Close MV-914-V.
30. Open MV-909-V so that the LaserTrace oxygen analyzer AE-990-V analyzers oxygen filter output gas.
31. Open MV-367-Ar very slowly to provide gas flow to the tank. Provide enough flow to increase the pressure observed on PI-487-Ar slowly.
32. Slowly open MV-367-Ar to cool down the tank. Monitor the tank pressure on PI-487-Ar and adjust MV-367-Ar accordingly.
33. Monitor liquid accumulation by observing LIT-323-Ar and LT-326-Ar.
34. If the liquid level as indicated by LIT-323-Ar or LT-326-Ar reaches 5.7 psid or when the trailer is empty close MV-549-Ar.
35. Close MV-909-V.
36. Open MV-914-V so that the LaserTrace oxygen analyzer AE-990-V analyzers oxygen filter output gas.
37. Close MV-932-V and open MV-937-V so that the Servomex nitrogen analyzer AE-993-V analyzes the tank vapor.
38. Close MV-924-V.

39. Open MV-929-V so that the DF-310E oxygen analyzer AE-992-V analyzes the tank vapor.
40. Allow the remaining liquid in the piping to vent thru the tank.
41. Close MV-367-Ar to isolate the tank.
42. Close the liquid argon supply trailer isolation valve.
43. Open MV-547-Ar to vent the fill line.
44. When the fill line has warmed to ambient disconnect the fill hose and close MV-547-Ar
45. Proceed to the “Tank refrigeration procedure”.

REV	DESCRIPTION	DRAWN	DATE
		APPROVED	DATE
M	MISC. REVISIONS MADE. J.CATALANELLO 22-MAY-2012		
F	MISC. REVISIONS MADE. J.CATALANELLO 26-FEB-2010; M.ADAMOWSKI 26-FEB-2010		
G	MISC. REVISIONS MADE. J.CATALANELLO 10-JAN-2011; T.TOPE 12-JAN-2012	A	ADDED TAG NUMBERS TO VALVE TYPES — V. MAJDANSKI 25FEB08; R. SCHMITT 26FEB08
H	MISC. REVISIONS MADE. J.CATALANELLO 10-JAN-2011; T.TOPE 03-FEB-2011	B	MOVE CONDENSOR OUTSIDE TANK — J.CATALANELLO 07-DEC-2008; R.SCHMITT 10-DEC-2008
J	MISC. REVISIONS MADE. J.CATALANELLO 23-FEB-2011; T.TOPE 28-FEB-2011	C	MISC. REVISIONS MADE. — J.CATALANELLO 23-DEC-2008; R.SCHMITT 06-JAN-2009
K	MISC. REVISIONS MADE. J.CATALANELLO 04-MAR-2011; T.TOPE 22-JUN-2011	D	MISC. REVISIONS MADE. — J.CATALANELLO 17-NOV-2009; T.TOPE 14-DEC-2009
L	MISC. REVISIONS MADE. J.CATALANELLO 11-JUL-2011; T.TOPE 01-MAR-2012	E	MISC. REVISIONS MADE. — J.CATALANELLO 17-NOV-2009; T.TOPE 15-JAN-2010

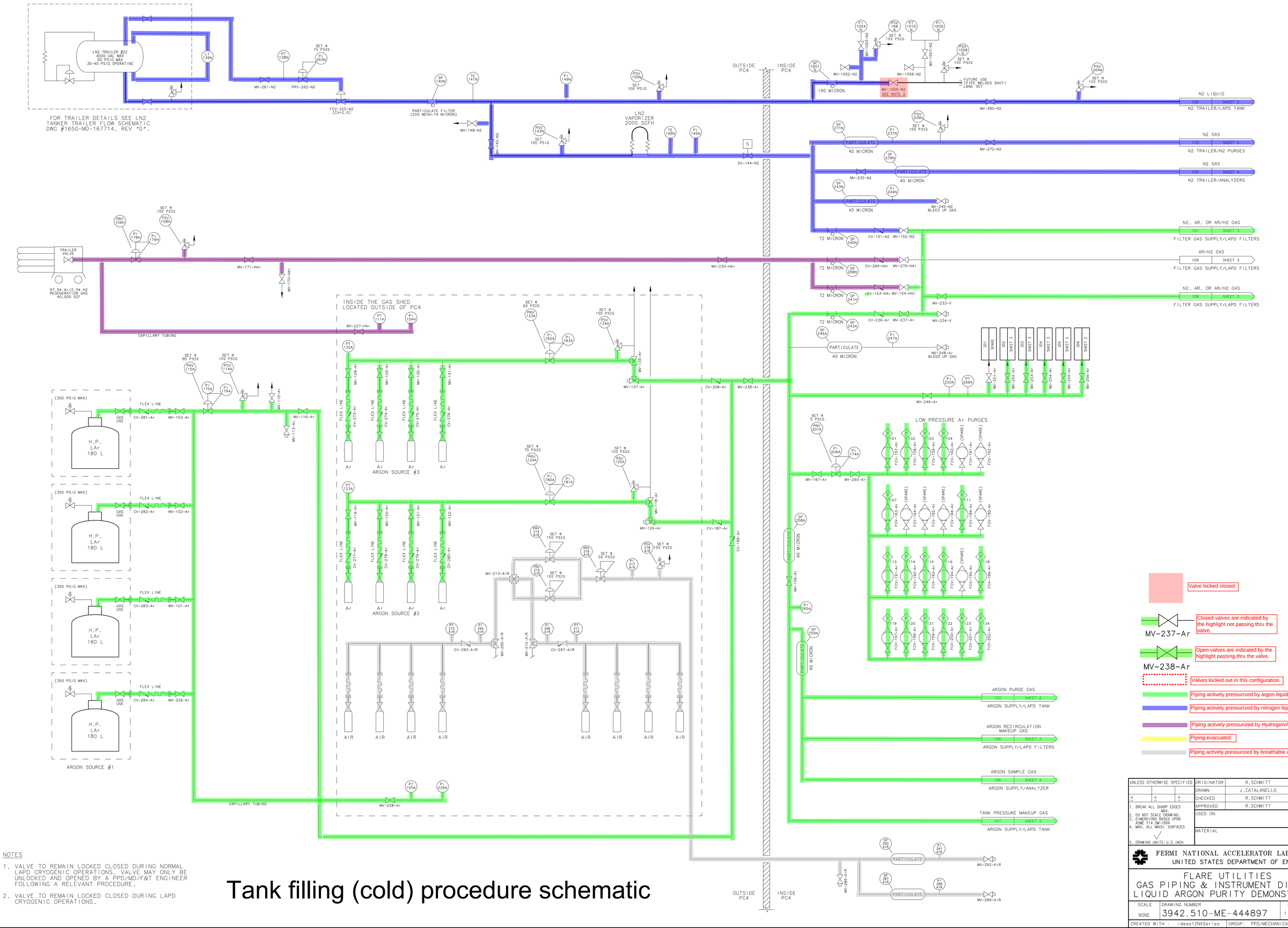

Valve locked closed

MV-237-Ar — Closed valves are indicated by the highlight not passing thru the valve.

MV-238-Ar — Open valves are indicated by the highlight passing thru the valve.

Valves locked out in this configuration.

Piping actively pressurized by argon liquid or vapor

Piping actively pressurized by nitrogen liquid or vapor

Piping actively pressurized by Hydrogen/Argon gas

Piping evacuated

Piping actively pressurized by breathable air

NOTES

1. VALVE TO REMAIN LOCKED CLOSED DURING NORMAL LAPD CRYOGENIC OPERATIONS. VALVE MAY ONLY BE UNLOCKED AND OPENED BY A PPD/MD/F&T ENGINEER FOLLOWING A RELEVANT PROCEDURE.
2. VALVE TO REMAIN LOCKED CLOSED DURING LAPD CRYOGENIC OPERATIONS.

Tank filling (cold) procedure schematic

UNLESS OTHERWISE SPECIFIED	ORIGINATOR	R.SCHMITT	26-JUN-2007
	DRAWN	J.CATALANELLO	07-DEC-2007
± ± ±	CHECKED	R.SCHMITT	12-DEC-2007
1. BREAK ALL SHARP EDGES MAX.	APPROVED	R.SCHMITT	12-DEC-2007
2. DO NOT SCALE DRAWING. 3. DIMENSIONS BASED UPON ASME Y14.5M-1994 4. MAX. ALL MACH. SURFACES	USED ON		
5. DRAWING UNITS: U.S. INCH	MATERIAL		

FERMI NATIONAL ACCELERATOR LABORATORY
UNITED STATES DEPARTMENT OF ENERGY

FLARE UTILITIES
GAS PIPING & INSTRUMENT DIAGRAM
LIQUID ARGON PURITY DEMONSTRAT'N

SCALE	DRAWING NUMBER	SHEET	REV
NONE	3942.510-ME-444897	1 OF 4	M

CREATED WITH : Ideas12NXSeries | GROUP: PPD/MECHANICAL DEPARTMENT

Tank filling (cold) procedure schematic

VENTS OUTSIDE

OUTSIDE PC4

INSIDE PC4

MV-333-N2

PT 332N

PI 468N

MV-469-N2

PSV 335N SET @ 100 PSIG

TE 493N

LPAr P 101

PSV 334A SET @ 60 PSIG

PI 435A

MV-434-Ar

MV-466-Ar

MV-489-Ar

ARGON CONDENSER

COIL 3: 1100 WATTS

COIL 2: 3300 WATTS

COIL 1: 4400 WATTS

MV-465-Ar

MV-372-Ar

LPN2 P 208

SV-319-N2

SV-320-N2

SV-321-N2

SV-450-N2

PRV 310N SET @ 20 PSIG

PSV 306N SET @ 100 PSIG

PSV 311N SET @ 60 PSIG

PI 309N

PT 307N

MV-470-N2

MV-313-N2

MV-314-N2

LT 316N

MV-315-N2

PI 303N

PT 304N

SET @ 100 PSIG

MV-482-N2

SP 301N

N2 LIQUID

100 SHEET 1

N2 TRAILER/LAPD TANK

MV-302-N2

(200 MESH-74 MICRON)

FCV-305-N2 (CV=2.0)

NITROGEN PHASE SEPERATOR

0.8 PSID OPERATING LEVEL HOLDS 25 GALS (95L) 0-100% LEVEL

LPN2 P 203

PSV 317N SET @ 100 PSIG

SP 479N

(200 MESH-74 MICRON)

FCV-312-N2 (CV=0.3)

MV-495-N2

CV-494-N2

MV-415-N2

PRV 378N SET @ 5 PSIG

PI 379N

PI 380N

N2 GAS

110 SHEET 1

N2 TRAILER/N2 PURGES

MV-477-N2

201 FCV-382-N2

202 FCV-417-N2

203 FCV-449-N2

204 FCV-451-N2

205 FCV-452-N2

206 FCV-453-N2

207 FCV-454-N2

208 FCV-467-N2

209 FCV-664-N2 (SPARE) FCV-682-N2

211 FCV-342-N2

212 FCV-344-N2

213 FCV-345-N2

214 FCV-348-N2

215 FCV-349-N2

216 FCV-360-N2

217 FCV-366-N2

218 FCV-371-N2

219 FCV-373-N2

220 FCV-374-N2

ARGON GAS

SHEET 3 502

FILTERS VENTS/GAS VENT

ARGON LIQUID

302 SHEET 3

LAPD CONDENSER/ARGON PUMP

SET @ 100 PSIG PSV 329A

SET @ 100 PSIG PSV 497A

PI 496A

MV-498-Ar

MV-499-Ar

ARGON LIQUID

SHEET 3 505

LAPD TANK/ARGON PUMP

ARGON GAS

SHEET 3 501

PURITY MONITOR/VENT COMPRESSOR

LPAr P 103

PSV 361A SET @ 40 PSIG

MV-364-Ar

PI 460A

PI 358A

PT 359A

PI 362A

PT 363A

MV-461-Ar

MV-459-Ar

MV-462-Ar

PI 463A

VAPOR COMPRESSOR 1
6 SCFM @ 0 PSIG
1 SCFM @ 35 PSIG

MV-436-Ar

MV-464-Ar

MV-438-Ar

MV-437-Ar

ARGON GAS

301 SHEET 3

VENT COMPRESSOR/LAPD FILTERS

SV-351-Ar

305 SHEET 1

Ar GAS-85 Psig

PCV 351A

MV-350-Ar

MV-354-Ar

MV-458-Ar

MV-460-Ar

MV-341-Ar

MV-343-Ar

MV-457-Ar

MV-347-Ar

MV-353-Ar

MV-311-Ar

SV-432-Ar

306 SHEET 1

Ar GAS-85 Psig

SP 471A

PARTICULATE 40 MICRON

PI 431A

AV 432A

MV-433-Ar

MV-472-Ar

TANK PRESSURE MAKEUP GAS

107 SHEET 1

ARGON SUPPLY/LAPD TANK

LPAr P 122

PSV 491A SET @ 20 PSIG

P 487A

MV-485-Ar MV-486-Ar

MV-427-Ar

MV-324-Ar

MV-327-Ar

MV-328-Ar

MV-322-Ar

MV-325-Ar

LIT 323A

LT 326A

(154 IN. H2O MAX)
(5.6 PSI MAX)

MV-480-Ar

CV-478-Ar

MV-340-Ar

ARGON GAS

503 SHEET 3

LAPD FILTERS/LAPD TANK

FC D FT

CV-338-Ar

MV-339-Ar

FCVE 300A

(INITIAL TANK PURGE 5 SCFM)

ARGON PURGE GAS

103 SHEET 1

ARGON SUPPLY/LAPD TANK

MV-330-Ar

LPN2 P 202

MV-384-Ar

TE 446A

VENT AND CONDENSER PORT

FIBERGLASS AND FOAM INSULATION

LPN2 P 201

FO-376-Ar

FO-381-Ar

FO-355-1-Ar

FO-355-2-Ar

FO-355-3-Ar

FO-355-4-Ar

AE 298A

AE 299A

SC 801

FCV-221-Ar

MV-219-Ar

FCV-222-Ar

MV-220-Ar

MV-256-Ar

MV-428-Ar

MV-318-Ar

FO-355-5-Ar

FO-355-6-Ar

FO-355-7-Ar

FO-355-8-Ar

SP 484A

PARTICULATE

MV-483-Ar

PT 370A

PT 369A

LPAr P 102

SET @ 3/0.2 PSIG

PSV 377A

FO-355-9-Ar

FO-355-10-Ar

FO-355-11-Ar

FO-355-12-Ar

FO-383-Ar

FO-429-Ar

FO-430-Ar

LPN2 P 207

LPN2 P 206

TRANSLATING RING

TRANSLATING RTD PORT

PRM PORT

TPC BIAS

TPC SIGNAL

TPC HV

TPC LCR

RELIEF PORT

PRM PORT

TE 445A

TE 447A

TE 444A

TE 443A

TE 448A

TANK GAS VOLUME
870 ft³

VAPOR SPACE CAPILLARY
22.5° BELOW MAIN FLANGE

2/3 ELEVATION CAPILLARY
80° FROM BOTTOM

1/3 ELEVATION CAPILLARY
40° FROM BOTTOM

LIQUID ARGON
5,875 GAL
(22,240L)
(785 ft³)
31 TONNES

PURITY MONITOR SHORT PRM 1

PURITY MONITOR LONG PRM 3

PURITY MONITOR LONG PRM 2

PURITY MONITOR SHORT PRM 4

TE 5
TE 6
TE 7
TE 1
TE 2
TE 3
TE 419A
TE 412A
TE 409A
TE 410A
TE 411A
TE 413A
TE 414A
TE 418A
TE 420A
TE 421A
TE 422A
TE 439A
TE 440A
TE 442A
TE 423A
TE 441A

HTR 385A HTR 386A HTR 387A
HTR 397A HTR 398A HTR 399A
HTR 388A HTR 389A HTR 390A HTR 391A HTR 392A HTR 393A HTR 394A HTR 395A HTR 396A
HTR 400A HTR 401A HTR 402A HTR 403A HTR 404A HTR 405A HTR 406A HTR 407A HTR 408A

LONG BO TPC
+2.25" LL3, LL4
0 LL2
-8.5" LL1

MAXIMUM LIQUID DEPTH 114.5"

PHASE SEPERATOR

ARGON LIQUID

SHEET 3 500

ARGON FILTERS/LAPD TANK

MV-367-Ar (CONTROL PLUG)

AE 365V H2O

AE 492V H2O

PT 267B

LPN2 P 205

ARGON LIQUID

300 SHEET 3

LAPD TANK/ARGON PUMP

MV-368-Ar

LPN2 P 204

(25 NOZZLES EACH 3/64 INCH)

TANK WALL HEAT LEAKAGE
2100 WATTS (800L/DAY)
(3.5%/DAY) (1000 SCFH)

Valve locked closed

Closed valves are indicated by the highlight not passing thru the valve.

MV-237-Ar

Open valves are indicated by the highlight passing thru the valve.

MV-238-Ar

Valves locked out in this configuration.

Piping actively pressurized by argon liquid or vapor

Piping actively pressurized by nitrogen liquid or vapor

Piping actively pressurized by Hydrogen/Argon gas

Piping evacuated

UNLESS OTHERWISE SPECIFIED		ORIGINATOR	R.SCHMITT	26-JUN-2007
		DRAWN	J.CATALANELLO	07-DEC-2007
±	± ±	CHECKED	R.SCHMITT	12-DEC-2007
1. BREAK ALL SHARP EDGES MAX.		APPROVED	R.SCHMITT	12-DEC-2007
2. DO NOT SCALE DRAWING. 3. DIMENSIONS BASED UPON ASME Y14.5M-1994 4. MAX., ALL MACH. SURFACES		USED ON		
5. DRAWING UNITS: U.S. INCH		MATERIAL		

FERMI NATIONAL ACCELERATOR LABORATORY
UNITED STATES DEPARTMENT OF ENERGY

FLARE UTILITIES
GAS PIPING & INSTRUMENT DIAGRAM
LIQUID ARGON PURITY DEMONSTRAT'N

SCALE	DRAWING NUMBER	SHEET	REV
NONE	3942.510-ME-444897	2 OF 4	M

CREATED WITH : Ideas12NXSeries | GROUP: PPD/MECHANICAL DEPARTMENT

version 11.13.12 page 47

Created: 08:12:10 on 18-10-12 (D-M-Y) By: catalan State: 1-INITIAL

Tank filling (cold) procedure schematic

N2,Ar, OR Ar/H2 GAS — 108 SHEET 1 — FILTER GAS SUPPLY/LAPD FILTERS
Ar/H2 GAS — 109 SHEET 1 — FILTER GAS SUPPLY/LAPD FILTERS
N2, AR, OR Ar/H2 GAS — 101 SHEET 1 — FILTER GAS SUPPLY/LAPD FILTERS
ARGON GAS — SHEET 2 502 — FILTER VENTS/GAS VENT
ARGON GAS — SHEET 2 501 — PURITY MONITOR/VENT COMPRESSOR
ARGON GAS — SHEET 2 503 — LAPD FILTERS/LAPD TANK
ARGON LIQUID — SHEET 2 500 — ARGON FILTERS/LAPD TANK
ARGON GAS — 301 SHEET 2 — VENT COMPRESSOR/LAPD FILTERS
ARGON RECIRCULATION MAKEUP GAS — 104 SHEET 1 — ARGON SUPPLY/LAPD FILTERS
ARGON LIQUID — SHEET 2 505 — LAPD TANK/ARGON PUMP
ARGON LIQUID — 302 SHEET 2 — LAPD CONDENSER/ARGON PUMP
ARGON LIQUID — 300 SHEET 2 — LAPD TANK/ARGON PUMP

MV-710-HAr, FCV-711-HAr, AE 702H, FCV-713-HAr, FCV-709-HAr, MV-712-HAr, MV-708-HAr, PI 707H, MV-687-HAr (DRAIN), MV-686-HAr (DRAIN), AE 566H H2O, AE 576H H2O, VENT OUTSIDE, VENT OUTSIDE, INSIDE PC4, OUTSIDE PC4

MV-716-HAr, PI 715H, S, SV-706-HAr, FCV-714-HAr, PI 533H, PT 534H, FCV-592-HAr, SP 473H, PARTICULATE 5 MICRON, S, SV-705-HAr, (1200W, 2.3 SCFM MIN FLOW), PI 684H, HTR 612H, TE 635H, TE 636H, TE 637H, MV-535-HAr, 700 SCFH Ar FLOW TYPICAL, MV-685-HAr, HTR 634H, TE 638H, TE 639H, TE 640H, (1200W, 2.3 SCFM MIN FLOW), MV-539-HAr SEE NOTE 1

SV-562-Ar, S, 303 SHEET 1 Ar GAS-85 Psig, FCV 562A, MV-560-Ar, PI 589A, PT 590A, MV-694-Ar SEE NOTE 1, LT 586A, LPAr P 111, PSV 587A SET @ 100 PSIG

LPAr P 113, PSV 615A SET @ 100 PSIG, PSV-696-Ar SET @ 100 PSIG, MV-695-Ar, MV-692-Ar, MV-691-Ar, PT 704A, PI 673A, MV-675-Ar, VACUUM BREAK, FUTURE USE LBNE 35T, MV-5002-Ar SEE NOTE 2, SP 476A, PARTICULATE 15 MICRON, VACUUM BREAK

MV-593-Ar, INLINE PURITY MONITOR LONG 94L 26.9 INCH OPERATING LEVEL, PSV 672V SET @ 0 PSIG, 302 SHEET 1 Ar GAS-85 Psig, S, SV-557-Ar, FO-722-Ar, AV-557-Ar

LPAr P 114, PSV 683A SET @ 100 PSIG, PI 678A, PT 703A, MV-677-Ar, (CONTROL PLUG), MV-674-Ar, MV-559-Ar SEE NOTE 1

SP 721A, PARTICULATE 15 MICRON, MV-667-Ar, MV-676-Ar

LAr VAPORIZER, PI 697A, TE 611A, TS 700A, HTR 701A, SET @ 100 PSIG, PSV 693A, S, SV-699-Ar (30KW, 7,500 SCFH), VENTS OUTSIDE, FLEXIBLE HOSE

FLEXIBLE HOSE

TE 574H, SC 806, OXYGEN FILTER TO GAS ANALYZERS, PT 570A, PI 571A, LPAr P 120, PSV 568A SET @ 0 PSIG, PSV 671V SET @ 100 PSIG, MV-513-HAr, MV-572-Ar, MV-569-Ar, MV-565-HAr, TE 542A, VACUUM BREAK, VACUUM BREAK, MV-554-Ar

TE 626A, TE 627A, TE 628A, TE 629A, TE 630A, PT 669V, 77L, COPPER

SC 807, MOLE SIEVE FILTERS TO GAS ANALYZERS, PT 603A, PI 604A, LPAr P 124, PSV 601A SET @ 100 PSIG, PSV 670V SET @ 0 PSIG, MV-540-Ar, MV-541-Ar, MV-602-Ar, MV-573-HAr, VACUUM BREAK, (CONTROL PLUG), MV-553-Ar

TE 621A, TE 622A, TE 623A, TE 624A, TE 625A, PT 668V, 77L, MOLE SIEVE

MV-549-Ar, PARTICULATE 20 MICRON, MV-681-Ar, PI 680A, SP 474A, PSV 548A SET @ 100 PSIG, PI 545A, SC 808, PSV 543A SET @ 100 PSIG, SP 620A (200 MESH-72 MICRON), MV-544-Ar, MV-547-Ar

LAr TRUCK CONNECTION MAX OPERATING SUPPLY PRESSURE 70 PSIG

USED FOR FILLING & SPECIAL NEED ONLY. TRAILER PUMP MUST BE LOCKED OUT DURING FILL.

NOTE:

SEE DWG#489659 FOR DETAILS OF FERMILAB LAr TRAILER

PI 551A, PI 552A, LPAr P 115, PSV 531A SET @ 100 PSIG, MV-550-Ar, CV-532-Ar, MV-610-Ar, MV-527-Ar, MV-609-Ar, FCVE 606A, FC, D, FT, (29.6 SCFH Ar MAX), CV-607-Ar, MV-608-Ar

VACUUM BREAK, (CONTROL PLUG), MV-516-Ar FILTER BYPASS

MV-563-Ar, MV-633-Ar SEE NOTE 1, FLEXIBLE HOSE, TO LAr VAPORIZER, CONDENSER RETURN, MV-502-Ar, 2" SCH 10 INNER PIPE, PURIFICATION AUTO SHUTOFF

LPAr P 121, PSV 500A SET @ 100 PSIG, PI 653A, MV-654-Ar

LPAr P 104, PSV 650A SET @ 100 PSIG, PI 651A, MV-652-Ar, SV-501-Ar, S, 304 SHEET 1 Ar GAS-85 Psig, AV 501A

LPAr P 123, PSV 517A SET @ 100 PSIG, PI 655A, DPT 656A, PI 657A, MV-658-Ar, MV-659-Ar, MV-660-Ar, SP 475A, PARTICULATE (234 MICRON), MV-717-Ar, PI 509A, PI 510A, MV-508-Ar, DPT 507A, SC 504A, M, PT 505A, TE 662A, MV-506-Ar, PSV-666-V (0 PSIG), MV-511-Ar, MV-512-Ar, SC 805, LIQUID PUMP (12.5 GPM AT 50.7 PSID AND 5700 RPM) (8 HR TIME CONSTANT) (5000 HR BEARING LIFE) (6300 RPM MAX AT 105HZ), VACUUM BREAK, MV-514-Ar

LPAr P 107, PSV 663A SET @ 100 PSIG, MV-718-Ar, MV-661-Ar SEE NOTE 2, LPAr P 119, PSV 720A SET @ 100 PSIG, MV-719-Ar, PI 698A, FLEXIBLE HOSE

LPAr P 118, PSV 598A SET @ 100 PSIG, PI 690A, MV-689-Ar, MV-688-Ar, MV-599-Ar 1" SCH 10 INNER PIPE

MV-5001-Ar SEE NOTE 2, VACUUM BREAK, FUTURE USE LBNE 35T

LPAr P 116, PSV 564A SET @ 100 PSIG, MV-597-Ar, PI 665A, MV-594-Ar, FT, FT-595-Ar, LPN2 P 209, FOAM INSULATION, MV-596-Ar

INSIDE PC4, OUTSIDE PC4

NOTES

1. VALVE TO REMAIN LOCKED CLOSED DURING NORMAL LAPD CRYOGENIC OPERATIONS. VALVE MAY ONLY BE UNLOCKED AND OPENED BY A PPD/MD/F&T ENGINEER FOLLOWING A RELEVANT PROCEDURE.
2. VALVE TO REMAIN LOCKED CLOSED DURING LAPD CRYOGENIC OPERATIONS.

MV-237-Ar — Closed valves are indicated by the highlight not passing thru the valve.
MV-238-Ar — Open valves are indicated by the highlight passing thru the valve.
Valves locked out in this configuration.
Piping actively pressurized by argon liquid or vapor
Piping actively pressurized by nitrogen liquid or vapor
Piping actively pressurized by Hydrogen/Argon gas
Piping evacuated
Valve locked closed

UNLESS OTHERWISE SPECIFIED	ORIGINATOR	R.SCHMITT	26-JUN-2007
	DRAWN	J.CATALANELLO	07-DEC-2007
± ± ±	CHECKED	R.SCHMITT	12-DEC-2007
1. BREAK ALL SHARP EDGES MAX.	APPROVED	R.SCHMITT	12-DEC-2007
2. DO NOT SCALE DRAWING. 3. DIMENSIONS BASED UPON ASME Y14.5M-1994 4. MAX. ALL MACH. SURFACES	USED ON		
5. DRAWING UNITS: U.S. INCH	MATERIAL		

FERMI NATIONAL ACCELERATOR LABORATORY
UNITED STATES DEPARTMENT OF ENERGY

FLARE UTILITIES
GAS PIPING & INSTRUMENT DIAGRAM
LIQUID ARGON PURITY DEMONSTRAT'N

SCALE	DRAWING NUMBER	SHEET	REV
NONE	3942.510-ME-444897	3 OF 4	M

CREATED WITH : Ideas12NXSeries | GROUP: PPD/MECHANICAL DEPARTMENT

version 11.13.12 page 48

Created: 08:12:17 on 18-10-12 (D-M-Y) By: catalan State: 1-INITIAL

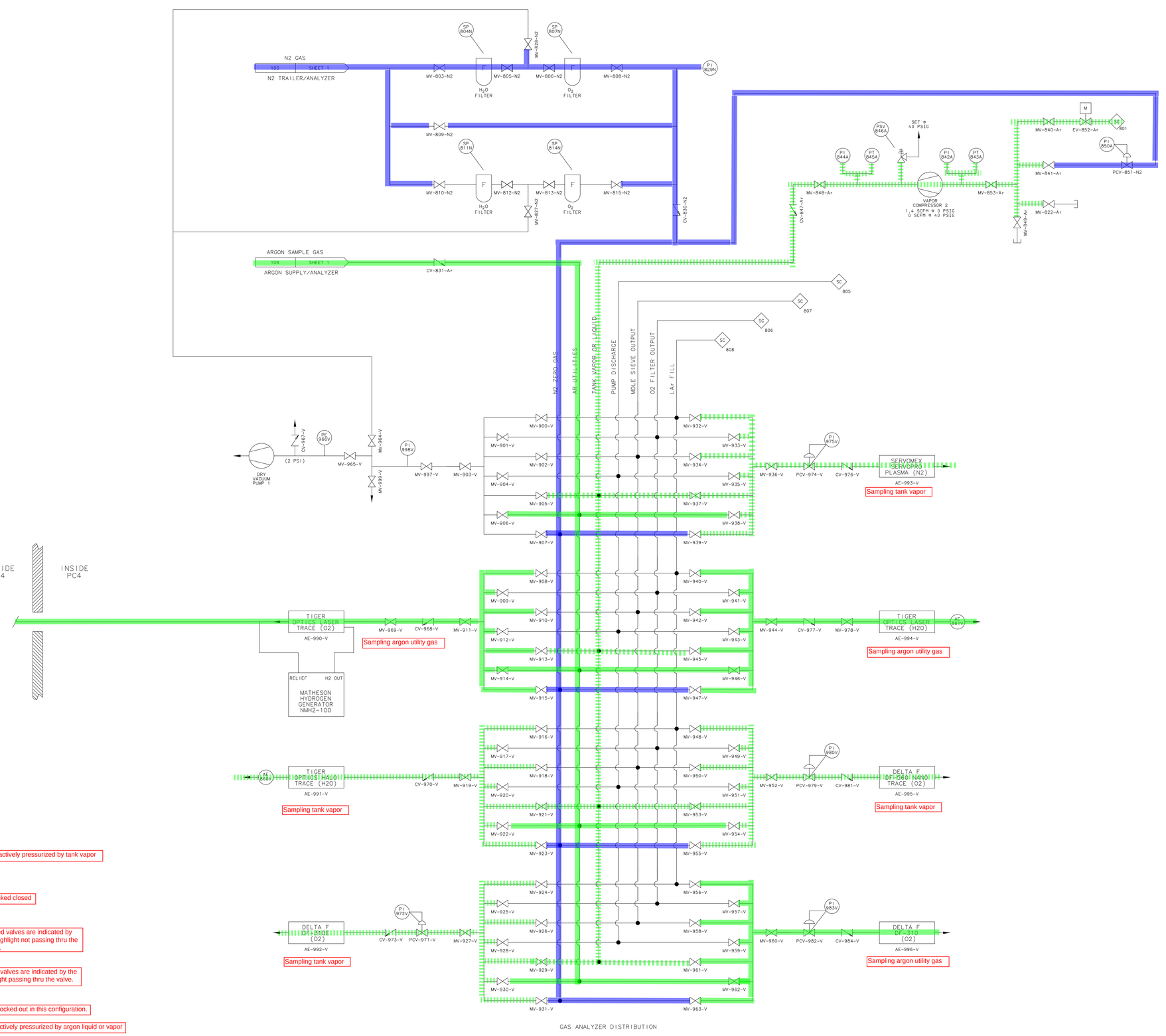

Piping actively pressurized by tank vapor

Valve locked closed

MV-237-Ar — Closed valves are indicated by the highlight not passing thru the valve.

MV-238-Ar — Open valves are indicated by the highlight passing thru the valve.

Valves locked out in this configuration.

Piping actively pressurized by argon liquid or vapor

Piping actively pressurized by nitrogen liquid or vapor

Piping actively pressurized by Hydrogen/Argon gas

Piping evacuated

Tank filling (cold) procedure schematic

UNLESS OTHERWISE SPECIFIED	ORIGINATOR	R.SCHMITT	26-JUN-2007
	DRAWN	J.CATALANELLO	07-DEC-2007
± ± ±	CHECKED	R.SCHMITT	12-DEC-2007
1. BREAK ALL SHARP EDGES MAX.	APPROVED	R.SCHMITT	12-DEC-2007
2. DO NOT SCALE DRAWING. 3. DIMENSIONS BASED UPON ASME Y14.5M-1994 4. MAX. ALL MACH. SURFACES	USED ON		
5. DRAWING UNITS: U.S. INCH	MATERIAL		

FERMI NATIONAL ACCELERATOR LABORATORY
UNITED STATES DEPARTMENT OF ENERGY

FLARE UTILITIES
GAS PIPING & INSTRUMENT DIAGRAM
LIQUID ARGON PURITY DEMONSTRAT'N

SCALE	DRAWING NUMBER	SHEET	REV
NONE	3942.510-ME-444897	4 OF 4	M

CREATED WITH : Ideas12NXSeries | GROUP: PPD/MECHANICAL DEPARTMENT

version 11.13.12 page 49

7 - Tank refrigeration procedure

A PPD engineer must be present for each step of this procedure. If PPD has approved unattended operation the PPD engineer may initiate unattended operation once stable pressure control is obtained. This procedure turns on the liquid nitrogen refrigeration system which condenses the argon boil off vapor in the LAPD tank.

1. The following PLC loops should be active:
    a. AV-432-Ar – argon makeup gas to avoid tank vacuum
    b. PCV-351-Ar – tank vent to avoid tank over pressure
    c. AV-225-N2 – nitrogen supply shut-off in the event of PC4 ODH
    d. Compressor #1 - shutoff to avoid tank vacuum
    e. Compressor #2 - shutoff to avoid tank vacuum
    f. Vacuum pump #1 – shuts off to avoid tank vacuum
2. Configure the system valves as shown in the attached schematic..
3. Turn on the liquid nitrogen phase separator control loop in the PLC. Make the set point 0.8 psid.
4. Wait for the phase separator to achieve stable level control at the set point.
5. Open SV-450-N and SV-321-N2.
6. Using the tank pressure control loop in manual mode slowly open FCV-312-N2. Once FCV-312-N2 is close to the % open appropriate for pressure control switch the loop to auto mode with a set point of 2 psig.
7. Once stable pressure control is established the operator may proceed to the “Tank refrigeration with liquid pump procedure” which is the normal operating condition.

REV	DESCRIPTION	DRAWN	DATE
		APPROVED	DATE
M	MISC. REVISIONS MADE.	J.CATALANELLO	22-MAY-2012
L	MISC. REVISIONS MADE.	J.CATALANELLO T.TOPE	11-JUL-2011 01-MAR-2012
K	MISC. REVISIONS MADE.	J.CATALANELLO T.TOPE	04-MAR-2011 22-JUN-2011
J	MISC. REVISIONS MADE.	J.CATALANELLO T.TOPE	23-FEB-2011 28-FEB-2011
H	MISC. REVISIONS MADE.	J.CATALANELLO T.TOPE	10-JAN-2011 03-FEB-2011
G	MISC. REVISIONS MADE.	J.CATALANELLO T.TOPE	10-JAN-2011 12-JAN-2012
F	MISC. REVISIONS MADE.	J.CATALANELLO M.ADAMOWSKI	26-FEB-2010 26-FEB-2010
E	MISC. REVISIONS MADE.	J.CATALANELLO T.TOPE	17-NOV-2009 14-DEC-2009
D	MISC. REVISIONS MADE.	J.CATALANELLO T.TOPE	06-JAN-2009 17-NOV-2009
C	MISC. REVISIONS MADE.	J.CATALANELLO R.SCHMITT	23-DEC-2008 06-JAN-2009
B	MOVE CONDENSOR OUTSIDE TANK	J.CATALANELLO R.SCHMITT	07-DEC-2008 10-DEC-2008
A	ADDED TAG NUMBERS TO VALVE TYPES	V. MAJDANSKI R. SCHMITT	25FEB08 26FEB08

LN2 TRAILER #22
4000 GAL MAX
50 PSIG MAX
30-40 PSIG OPERATING

FOR TRAILER DETAILS SEE LN2 TANKER TRAILER FLOW SCHEMATIC DWG #1650-MD-167714, REV "D".

97.5% Ar/2.5% H2 REGENERATION GAS 40,000 SCF

ARGON SOURCE #1

ARGON SOURCE #2

ARGON SOURCE #3

INSIDE THE GAS SHED LOCATED OUTSIDE OF PC4

OUTSIDE PC4 / INSIDE PC4

LOW PRESSURE Ar PURGES

N2 LIQUID 100 SHEET 2 N2 TRAILER/LAPD TANK

N2 GAS 110 SHEET 2 N2 TRAILER/N2 PURGES

N2 GAS 105 SHEET 4 N2 TRAILER/ANALYZERS

N2, AR, OR AR/H2 GAS 101 SHEET 3 FILTER GAS SUPPLY/LAPD FILTERS

AR/H2 GAS 109 SHEET 3 FILTER GAS SUPPLY/LAPD FILTERS

N2, AR, OR AR/H2 GAS 108 SHEET 3 FILTER GAS SUPPLY/LAPD FILTERS

ARGON PURGE GAS 103 SHEET 2 ARGON SUPPLY/LAPD TANK

ARGON RECIRCULATION MAKEUP GAS 104 SHEET 3 ARGON SUPPLY/LAPD FILTERS

ARGON SAMPLE GAS 106 SHEET 4 ARGON SUPPLY/ANALYZER

TANK PRESSURE MAKEUP GAS 107 SHEET 2 ARGON SUPPLY/LAPD TANK

Valve locked closed

MV-237-Ar — Closed valves are indicated by the highlight not passing thru the valve.

MV-238-Ar — Open valves are indicated by the highlight passing thru the valve.

Valves locked out in this configuration.

Piping actively pressurized by argon liquid or vapor

Piping actively pressurized by nitrogen liquid or vapor

Piping actively pressurized by Hydrogen/Argon gas

Piping evacuated

Piping actively pressurized by breathable air

NOTES

1. VALVE TO REMAIN LOCKED CLOSED DURING NORMAL LAPD CRYOGENIC OPERATIONS. VALVE MAY ONLY BE UNLOCKED AND OPENED BY A PPD/MD/F&T ENGINEER FOLLOWING A RELEVANT PROCEDURE.
2. VALVE TO REMAIN LOCKED CLOSED DURING LAPD CRYOGENIC OPERATIONS.

Tank refrigeration procedure schematic

UNLESS OTHERWISE SPECIFIED	ORIGINATOR	R.SCHMITT	26-JUN-2007
	DRAWN	J.CATALANELLO	07-DEC-2007
± ± ±	CHECKED	R.SCHMITT	12-DEC-2007
1. BREAK ALL SHARP EDGES MAX.	APPROVED	R.SCHMITT	12-DEC-2007
2. DO NOT SCALE DRAWING. 3. DIMENSIONS BASED UPON ASME Y14.5M-1994 4. MAX. ALL MACH. SURFACES	USED ON		
5. DRAWING UNITS: U.S. INCH	MATERIAL		

FERMI NATIONAL ACCELERATOR LABORATORY
UNITED STATES DEPARTMENT OF ENERGY

FLARE UTILITIES
GAS PIPING & INSTRUMENT DIAGRAM
LIQUID ARGON PURITY DEMONSTRAT'N

SCALE	DRAWING NUMBER	SHEET	REV
NONE	3942.510-ME-444897	1 OF 4	M

CREATED WITH : Ideas12NXSeries | GROUP: PPD/MECHANICAL DEPARTMENT

Created: 08:12:02 on 18-10-12 (D-M-Y) By: catalan State: 1-INITIAL

version 11.13.12 page 51

Tank refrigeration procedure schematic

VENTS OUTSIDE

OUTSIDE PC4

INSIDE PC4

N2 LIQUID
100 SHEET 1
N2 TRAILER/LAPD TANK

MV-302-N2

(200 MESH-74 MICRON)

FCV-305-N2 (CV=2.0)

NITROGEN PHASE SEPERATOR

0.8 PSID OPERATING LEVEL HOLDS 25 GALS (95L) 0-100% LEVEL

MV-313-N2

MV-314-N2

MV-315-N2

MV-470-N2

SV-319-N2

SV-320-N2

SV-321-N2

SV-450-N2

MV-333-N2

MV-469-N2

ARGON CONDENSER

COIL 3: 1100 WATTS

COIL 2: 3300 WATTS

COIL 1: 4400 WATTS

MV-434-Ar

MV-466-Ar

MV-465-Ar

MV-489-Ar

MV-372-Ar

MV-495-N2

CV-494-N2

MV-482-N2

MV-415-N2

MV-477-N2

N2 GAS
110 SHEET 1
N2 TRAILER/N2 PURGES

FCV-312-N2 (CV=0.3)

(200 MESH-74 MICRON)

MV-499-Ar

MV-498-Ar

MV-496-Ar

ARGON GAS
SHEET 3 502
FILTERS VENTS/GAS VENT

ARGON LIQUID
302 SHEET 3
LAPD CONDENSER/ARGON PUMP

ARGON LIQUID
SHEET 3 505
LAPD TANK/ARGON PUMP

ARGON GAS
SHEET 3 501
PURITY MONITOR/VENT COMPRESSOR

ARGON GAS
301 SHEET 3
VENT COMPRESSOR/LAPD FILTERS

MV-350-Ar

MV-354-Ar

Ar GAS-85 Psig

MV-458-Ar

MV-461-Ar

MV-341-Ar

MV-343-Ar

MV-457-Ar

MV-347-Ar

MV-353-Ar

MV-351-Ar

MV-436-Ar

MV-459-Ar

MV-462-Ar

MV-461-Ar

MV-464-Ar

MV-364-Ar

MV-438-Ar

MV-437-Ar

VAPOR COMPRESSOR 1
6 SCFM @ 0 PSIG
1 SCFM @ 35 PSIG

TANK PRESSURE MAKEUP GAS
107 SHEET 1
ARGON SUPPLY/LAPD TANK

PARTICULATE
40 MICRON

MV-433-Ar

MV-472-Ar

MV-483-Ar

Ar GAS-85 Psig

MV-485-Ar

MV-486-Ar

MV-427-Ar

MV-324-Ar

MV-327-Ar

MV-328-Ar

MV-322-Ar

MV-325-Ar

(154 IN. H2O MAX)
(5.6 PSI MAX)

MV-480-Ar

MV-384-Ar

VENT AND CONDENSER PORT

TRANSLATING ROD

TRANSLATING RTD PORT

PRM PORT

TANK GAS VOLUME
870 ft³

VAPOR SPACE CAPILLARY
22.5° BELOW MAIN FLANGE

2/3 ELEVATION CAPILLARY
80° FROM BOTTOM

1/3 ELEVATION CAPILLARY
40° FROM BOTTOM

LIQUID ARGON
5,875 GAL
(22,240L)
(785 ft³)
31 TONNES

PURITY MONITOR SHORT

PURITY MONITOR LONG

LONG BO TPC

+2.25° LL3, LL4
0 LL2
-8.5° LL1

MAXIMUM LIQUID DEPTH 114.5°

TPC BIAS

TPC SIGNAL

TPC HV

TPC LCR

RELIEF PORT

PRM PORT

PHASE SEPERATOR

FIBERGLASS AND FOAM INSULATION

ARGON GAS
503 SHEET 3
LAPD FILTERS/LAPD TANK

CV-478-Ar

MV-340-Ar

ARGON PURGE GAS
103 SHEET 1
ARGON SUPPLY/LAPD TANK

CV-338-Ar

MV-339-Ar

MV-330-Ar

(INITIAL TANK PURGE 5 SCFM)

(25 NOZZLES EACH 3/64 INCH)

TANK WALL HEAT LEAKAGE
2100 WATTS (800L/DAY)
(3.5%/DAY) (1000 SCFH)

ARGON LIQUID
SHEET 3 500
ARGON FILTERS/LAPD TANK

MV-367-Ar
(CONTROL PLUG)

ARGON LIQUID
300 SHEET 3
LAPD TANK/ARGON PUMP

MV-368-Ar

Valve locked closed

Closed valves are indicated by the highlight not passing thru the valve.

MV-237-Ar

Open valves are indicated by the highlight passing thru the valve.

MV-238-Ar

Valves locked out in this configuration.

Piping actively pressurized by argon liquid or vapor

Piping actively pressurized by nitrogen liquid or vapor

Piping actively pressurized by Hydrogen/Argon gas

Piping evacuated

UNLESS OTHERWISE SPECIFIED	ORIGINATOR	R.SCHMITT	26-JUN-2007
	DRAWN	J.CATALANELLO	07-DEC-2007
± ± ±	CHECKED	R.SCHMITT	12-DEC-2007
1. BREAK ALL SHARP EDGES MAX.	APPROVED	R.SCHMITT	12-DEC-2007
2. DO NOT SCALE DRAWING. 3. DIMENSIONS BASED UPON ASME Y14.5M-1994 4. MAX. ALL MACH. SURFACES	USED ON		
5. DRAWING UNITS: U.S. INCH	MATERIAL		

FERMI NATIONAL ACCELERATOR LABORATORY
UNITED STATES DEPARTMENT OF ENERGY

FLARE UTILITIES
GAS PIPING & INSTRUMENT DIAGRAM
LIQUID ARGON PURITY DEMONSTRAT'N

SCALE	DRAWING NUMBER	SHEET	REV
NONE	3942.510-ME-444897	2 OF 4	M

CREATED WITH : Ideas12NXSeries | GROUP: PPD/MECHANICAL DEPARTMENT

version 11.13.12 page 52

Created: 08:12:10 on 18-10-12 (D-M-Y) By: catalan State: 1-INITIAL

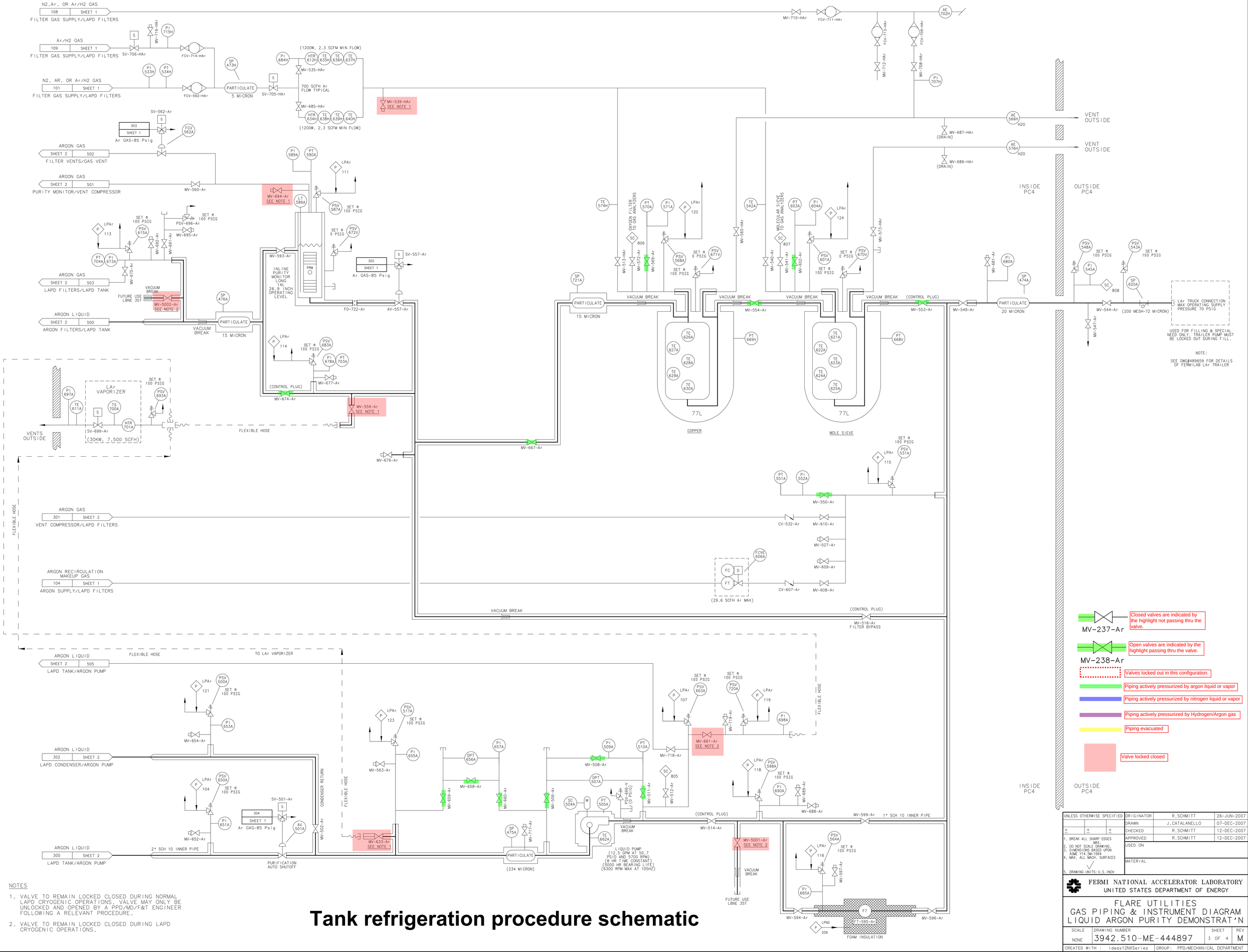

NOTES

1. VALVE TO REMAIN LOCKED CLOSED DURING NORMAL LAPD CRYOGENIC OPERATIONS. VALVE MAY ONLY BE UNLOCKED AND OPENED BY A PPD/MD/F&T ENGINEER FOLLOWING A RELEVANT PROCEDURE.
2. VALVE TO REMAIN LOCKED CLOSED DURING LAPD CRYOGENIC OPERATIONS.

Tank refrigeration procedure schematic

UNLESS OTHERWISE SPECIFIED	ORIGINATOR	R.SCHMITT	26-JUN-2007
	DRAWN	J.CATALANELLO	07-DEC-2007
± ± ±	CHECKED	R.SCHMITT	12-DEC-2007
1. BREAK ALL SHARP EDGES MAX.	APPROVED	R.SCHMITT	12-DEC-2007
2. DO NOT SCALE DRAWING. 3. DIMENSIONS BASED UPON ASME Y14.5M-1994 4. MAX. ALL MACH. SURFACES	USED ON		
5. DRAWING UNITS: U.S. INCH	MATERIAL		

FERMI NATIONAL ACCELERATOR LABORATORY
UNITED STATES DEPARTMENT OF ENERGY

FLARE UTILITIES
GAS PIPING & INSTRUMENT DIAGRAM
LIQUID ARGON PURITY DEMONSTRAT'N

SCALE	DRAWING NUMBER	SHEET	REV
NONE	3942.510-ME-444897	3 OF 4	M

CREATED WITH : Ideas12NXSeries | GROUP: PPD/MECHANICAL DEPARTMENT

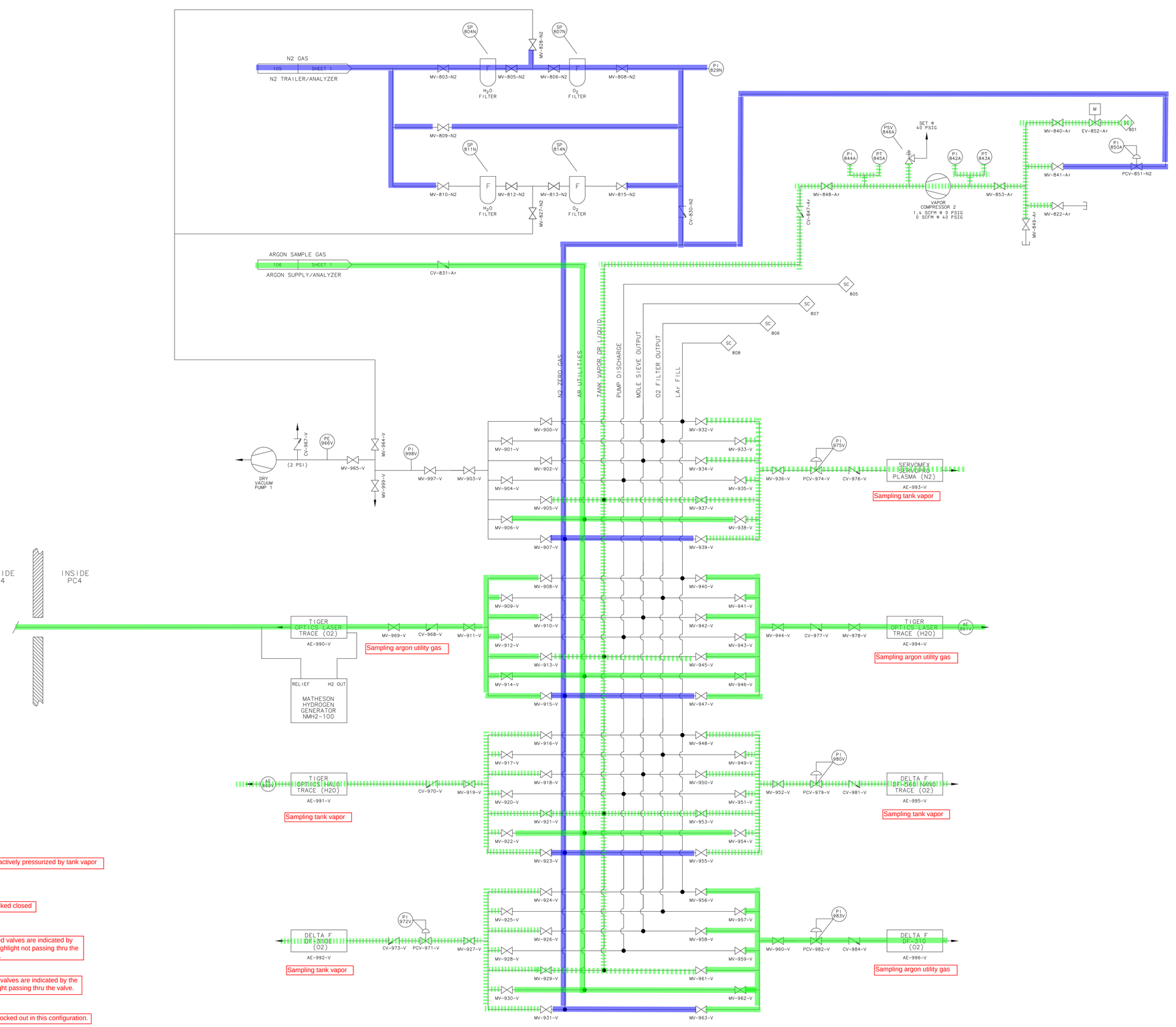

Piping actively pressurized by tank vapor

Valve locked closed

MV-237-Ar — Closed valves are indicated by the highlight not passing thru the valve.

MV-238-Ar — Open valves are indicated by the highlight passing thru the valve.

Valves locked out in this configuration.

Piping actively pressurized by argon liquid or vapor

Piping actively pressurized by nitrogen liquid or vapor

Piping actively pressurized by Hydrogen/Argon gas

Piping evacuated

Tank refrigeration procedure schematic

UNLESS OTHERWISE SPECIFIED	ORIGINATOR	R.SCHMITT	26-JUN-2007
	DRAWN	J.CATALANELLO	07-DEC-2007
± ± ±	CHECKED	R.SCHMITT	12-DEC-2007
1. BREAK ALL SHARP EDGES MAX.	APPROVED	R.SCHMITT	12-DEC-2007
2. DO NOT SCALE DRAWING. 3. DIMENSIONS BASED UPON ASME Y14.5M-1994 4. MAX. ALL MACH. SURFACES	USED ON		
5. DRAWING UNITS: U.S. INCH	MATERIAL		

FERMI NATIONAL ACCELERATOR LABORATORY
UNITED STATES DEPARTMENT OF ENERGY

FLARE UTILITIES
GAS PIPING & INSTRUMENT DIAGRAM
LIQUID ARGON PURITY DEMONSTRAT'N

SCALE	DRAWING NUMBER	SHEET	REV
NONE	3942.510-ME-444897	4 OF 4	M

CREATED WITH : Ideas12NXSeries | GROUP: PPD/MECHANICAL DEPARTMENT

version 11.13.12 page 54

8 - Tank refrigeration with liquid pump – *Normal Operating Configuration*

A PPD engineer must be present for all steps of this procedure. If PPD has approved unattended operation the PPD engineer may initiate unattended operation once the liquid recirculation is stable. The procedure describes starting the liquid argon recirculation pump once the tank refrigeration is stable. This procedure leads to the state that is considered the normal operating condition.

1. The following PLC loops should be active:
    a. LN2 refrigeration loop
    b. AV-432-Ar – argon makeup gas to avoid tank vacuum
    c. PCV-351-Ar – tank vent to avoid tank over pressure
    d. AV-225-N2 – nitrogen supply shut-off in the event of PC4 ODH
    e. Compressor #1 - shutoff to avoid tank vacuum
    f. Compressor #2 - shutoff to avoid tank vacuum
    g. Vacuum pump #1 – shuts off to avoid tank vacuum
2. System should be configured as shown in the attached schematic. The argon purification piping will be pressurized from the tank vapor space.
3. Very slowly open MV-368-Ar. This will introduce tank liquid into the argon purification piping. Throttle MV-368-Ar so that the condenser can handle the additional heat load of the piping cool down. Once MV-368-Ar is fully open and the condenser loop is stable proceed to the next step.
4. Very slowly open MV-465-Ar. This will cool down the condensate path to the pump. Throttle MV-465-Ar so that the condenser can handle the additional heat load of this piping section cool down. Once MV-465-Ar is fully open and the condenser loop is stable proceed to the next step.
5. Close MV-466-Ar.
6. Close MV-553-Ar.
7. Position MV-514-Ar to 3 turns open from closed. This is the proper resistance to start the pump against.
8. Open MV-718-Ar to allow any vapor to escape from the pump discharge.
9. Using the PLC control loop start the pump at 3500 RPM.
10. Once the pump catches prime close MV-718-Ar.
11. Ramp the pump to 5,500 RPM in 250 RPM steps. Adjust MV-514-Ar to keep the pump on its curve.
12. Once the pump is stable thru the filter bypass at 5,500 RPM slowly open MV-514-Ar while slowly closing MV-367-Ar. This must be done carefully to keep the pump on its curve. Transferring the resistance from the pump discharge to the tank inlet will increase the likelihood of single phase liquid in the purification piping.
13. Slowly open MV-553-Ar while slowly closing MV-516-Ar until MV-553-Ar is fully open and MV-516-Ar fully closed. This will move the pumped flow from the bypass into the filters. This step should be executed in a slow enough manner for the condenser to handle the additional heat load of filter cool down.
14. If filter regeneration is required when the system is cold, follow “Oxygen and molecular sieve filter regeneration procedure with liquid in tank.”

15. If the tank must be emptied follow “Tank emptying procedure”.

REV	DESCRIPTION	DRAWN	DATE
		APPROVED	DATE
M	MISC. REVISIONS MADE. J.CATALANELLO 22-MAY-2012		
F	MISC. REVISIONS MADE. J.CATALANELLO 26-FEB-2010; M.ADAMOWSKI 26-FEB-2010		
G	MISC. REVISIONS MADE. J.CATALANELLO 10-JAN-2011; T.TOPE 12-JAN-2012	A	ADDED TAG NUMBERS TO VALVE TYPES — V. MAJDANSKI 25FEB08; R. SCHMITT 26FEB08
H	MISC. REVISIONS MADE. J.CATALANELLO 10-JAN-2011; T.TOPE 03-FEB-2011	B	MOVE CONDENSOR OUTSIDE TANK — J.CATALANELLO 07-DEC-2008; R.SCHMITT 10-DEC-2008
J	MISC. REVISIONS MADE. J.CATALANELLO 23-FEB-2011; T.TOPE 28-FEB-2011	C	MISC. REVISIONS MADE. — J.CATALANELLO 23-DEC-2008; R.SCHMITT 06-JAN-2009
K	MISC. REVISIONS MADE. J.CATALANELLO 04-MAR-2011; T.TOPE 22-JUN-2011	D	MISC. REVISIONS MADE. — J.CATALANELLO 17-NOV-2009; T.TOPE 14-DEC-2009
L	MISC. REVISIONS MADE. J.CATALANELLO 11-JUL-2011; T.TOPE 01-MAR-2012	E	MISC. REVISIONS MADE. — J.CATALANELLO 17-NOV-2009; T.TOPE 15-JAN-2010

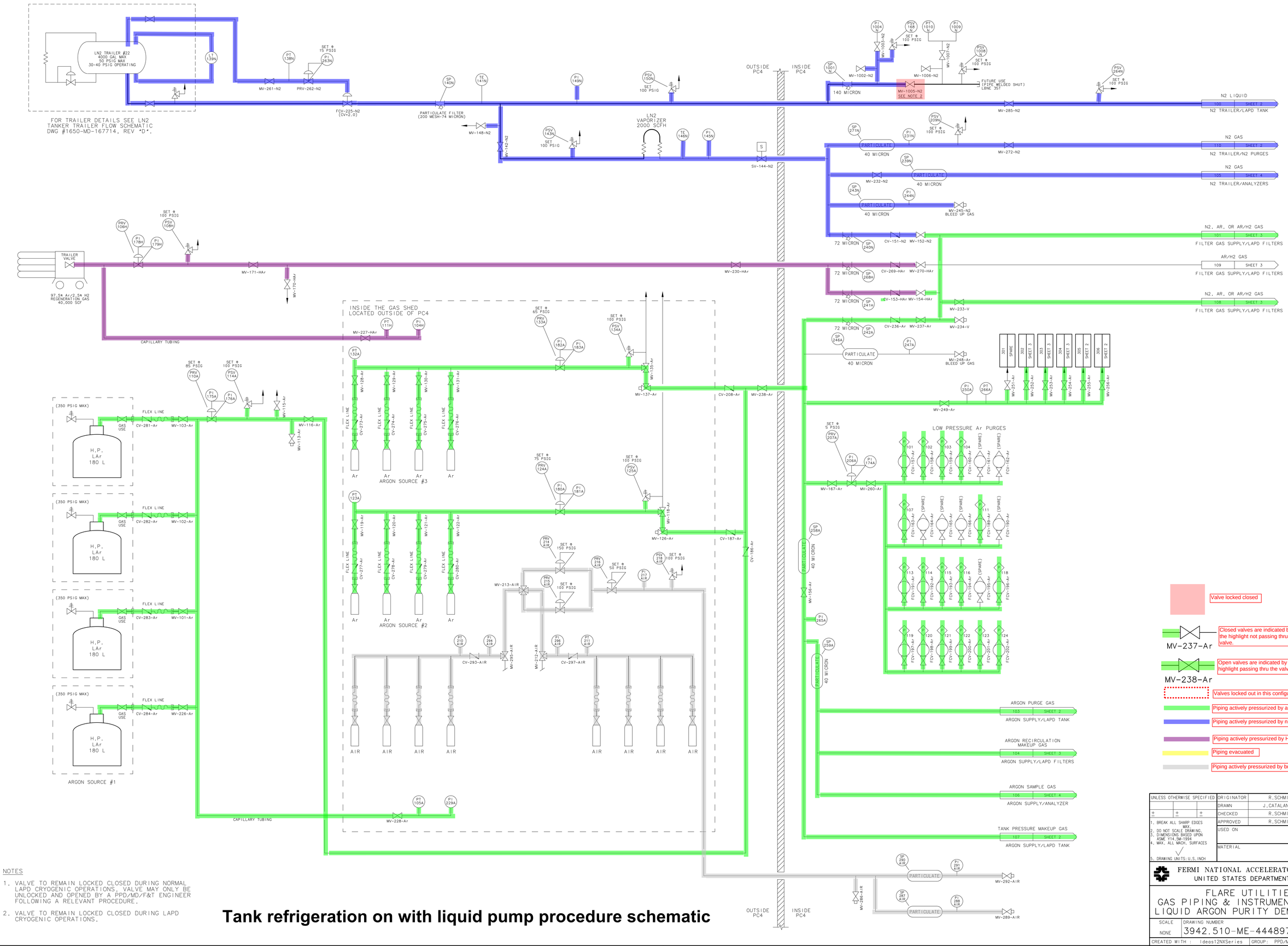

Valve locked closed

MV-237-Ar — Closed valves are indicated by the highlight not passing thru the valve.

MV-238-Ar — Open valves are indicated by the highlight passing thru the valve.

Valves locked out in this configuration.

Piping actively pressurized by argon liquid or vapor

Piping actively pressurized by nitrogen liquid or vapor

Piping actively pressurized by Hydrogen/Argon gas

Piping evacuated

Piping actively pressurized by breathable air

NOTES

1. VALVE TO REMAIN LOCKED CLOSED DURING NORMAL LAPD CRYOGENIC OPERATIONS. VALVE MAY ONLY BE UNLOCKED AND OPENED BY A PPD/MD/F&T ENGINEER FOLLOWING A RELEVANT PROCEDURE.
2. VALVE TO REMAIN LOCKED CLOSED DURING LAPD CRYOGENIC OPERATIONS.

Tank refrigeration on with liquid pump procedure schematic

UNLESS OTHERWISE SPECIFIED	ORIGINATOR	R.SCHMITT	26-JUN-2007
	DRAWN	J.CATALANELLO	07-DEC-2007
± ± ±	CHECKED	R.SCHMITT	12-DEC-2007
1. BREAK ALL SHARP EDGES MAX.	APPROVED	R.SCHMITT	12-DEC-2007
2. DO NOT SCALE DRAWING. 3. DIMENSIONS BASED UPON ASME Y14.5M-1994 4. MAX. ALL MACH. SURFACES	USED ON		
5. DRAWING UNITS: U.S. INCH	MATERIAL		

FERMI NATIONAL ACCELERATOR LABORATORY
UNITED STATES DEPARTMENT OF ENERGY

FLARE UTILITIES
GAS PIPING & INSTRUMENT DIAGRAM
LIQUID ARGON PURITY DEMONSTRAT'N

SCALE	DRAWING NUMBER	SHEET	REV
NONE	3942.510-ME-444897	1 OF 4	M

CREATED WITH : Ideas12NXSeries | GROUP: PPD/MECHANICAL DEPARTMENT

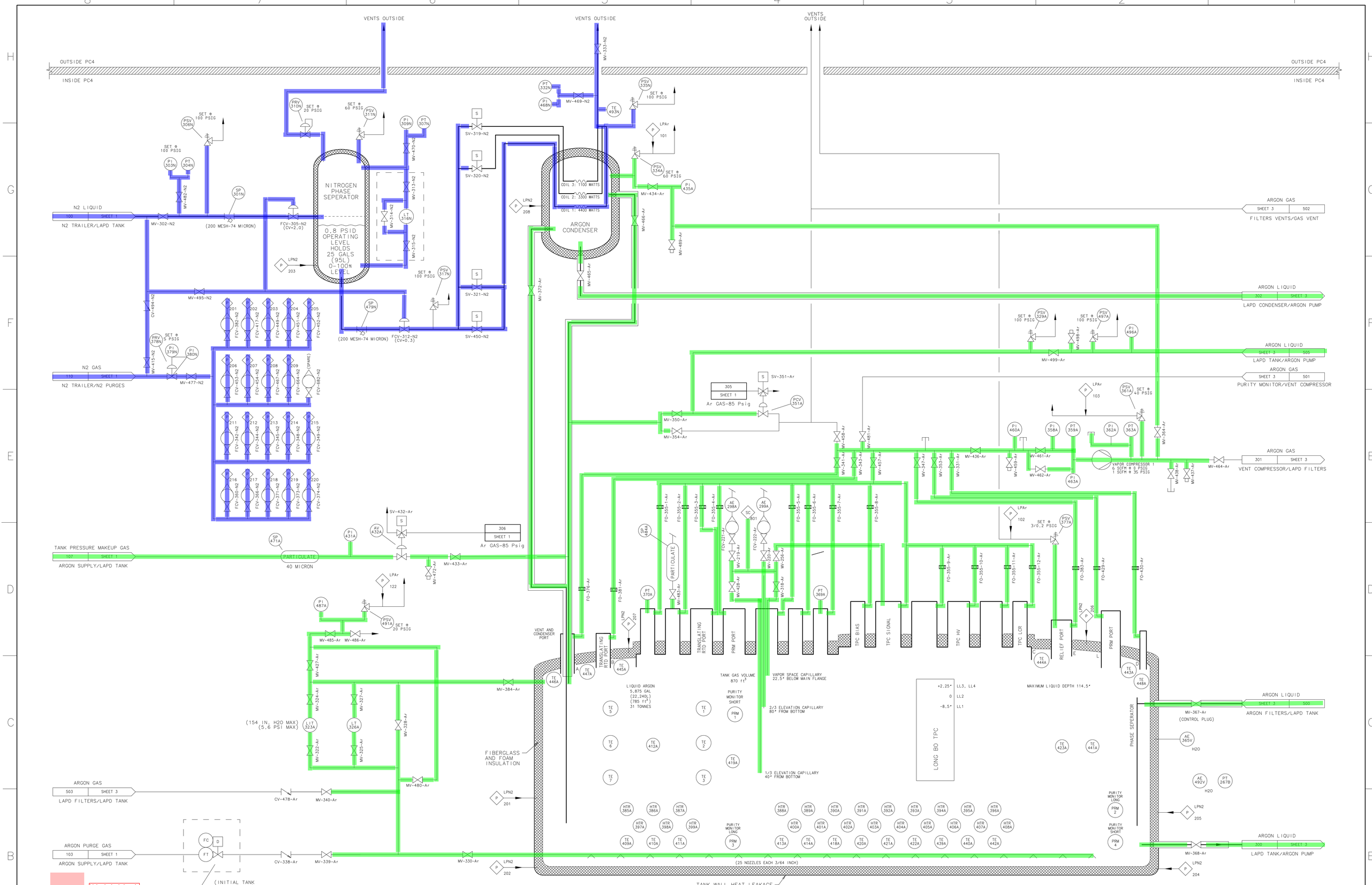

Tank refrigeration on with liquid pump procedure schematic

UNLESS OTHERWISE SPECIFIED			ORIGINATOR	R.SCHMITT	26-JUN-2007
			DRAWN	J.CATALANELLO	07-DEC-2007
±	±	±	CHECKED	R.SCHMITT	12-DEC-2007
1. BREAK ALL SHARP EDGES MAX. 2. DO NOT SCALE DRAWING. 3. DIMENSIONS BASED UPON ASME Y14.5M-1994 4. MAX. ALL MACH. SURFACES 5. DRAWING UNITS: U.S. INCH			APPROVED	R.SCHMITT	12-DEC-2007
			USED ON		
			MATERIAL		

FERMI NATIONAL ACCELERATOR LABORATORY
UNITED STATES DEPARTMENT OF ENERGY

FLARE UTILITIES
GAS PIPING & INSTRUMENT DIAGRAM
LIQUID ARGON PURITY DEMONSTRAT'N

SCALE	DRAWING NUMBER	SHEET	REV
NONE	3942.510-ME-444897	2 OF 4	M

CREATED WITH : Ideas12NXSeries GROUP: PPD/MECHANICAL DEPARTMENT

version 11.13.12 page 58

Created: 08:12:10 on 18-10-12 (D-M-Y) By: catalan State: 1-INITIAL

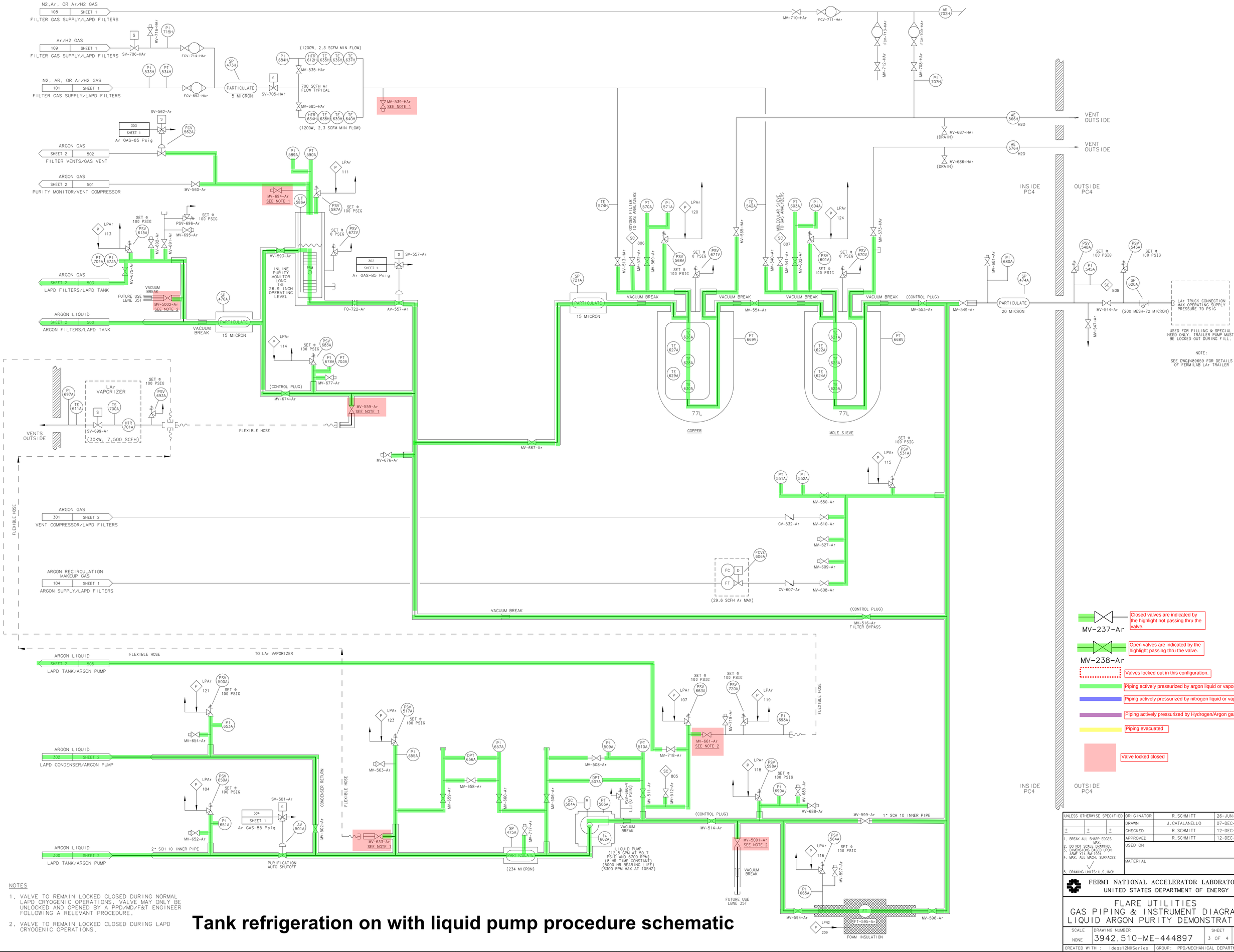

NOTES

1. VALVE TO REMAIN LOCKED CLOSED DURING NORMAL LAPD CRYOGENIC OPERATIONS. VALVE MAY ONLY BE UNLOCKED AND OPENED BY A PPD/MD/F&T ENGINEER FOLLOWING A RELEVANT PROCEDURE.
2. VALVE TO REMAIN LOCKED CLOSED DURING LAPD CRYOGENIC OPERATIONS.

Tank refrigeration on with liquid pump procedure schematic

UNLESS OTHERWISE SPECIFIED	ORIGINATOR	R.SCHMITT	26-JUN-2007
	DRAWN	J.CATALANELLO	07-DEC-2007
± ± ±	CHECKED	R.SCHMITT	12-DEC-2007
1. BREAK ALL SHARP EDGES MAX.	APPROVED	R.SCHMITT	12-DEC-2007
2. DO NOT SCALE DRAWING. 3. DIMENSIONS BASED UPON ASME Y14.5M-1994 4. MAX. ALL MACH. SURFACES	USED ON		
5. DRAWING UNITS: U.S.INCH	MATERIAL		

FERMI NATIONAL ACCELERATOR LABORATORY
UNITED STATES DEPARTMENT OF ENERGY

FLARE UTILITIES
GAS PIPING & INSTRUMENT DIAGRAM
LIQUID ARGON PURITY DEMONSTRAT'N

SCALE	DRAWING NUMBER	SHEET	REV
NONE	3942.510-ME-444897	3 OF 4	M

CREATED WITH : Ideas12NXSeries | GROUP: PPD/MECHANICAL DEPARTMENT

version 11.13.12 page 59

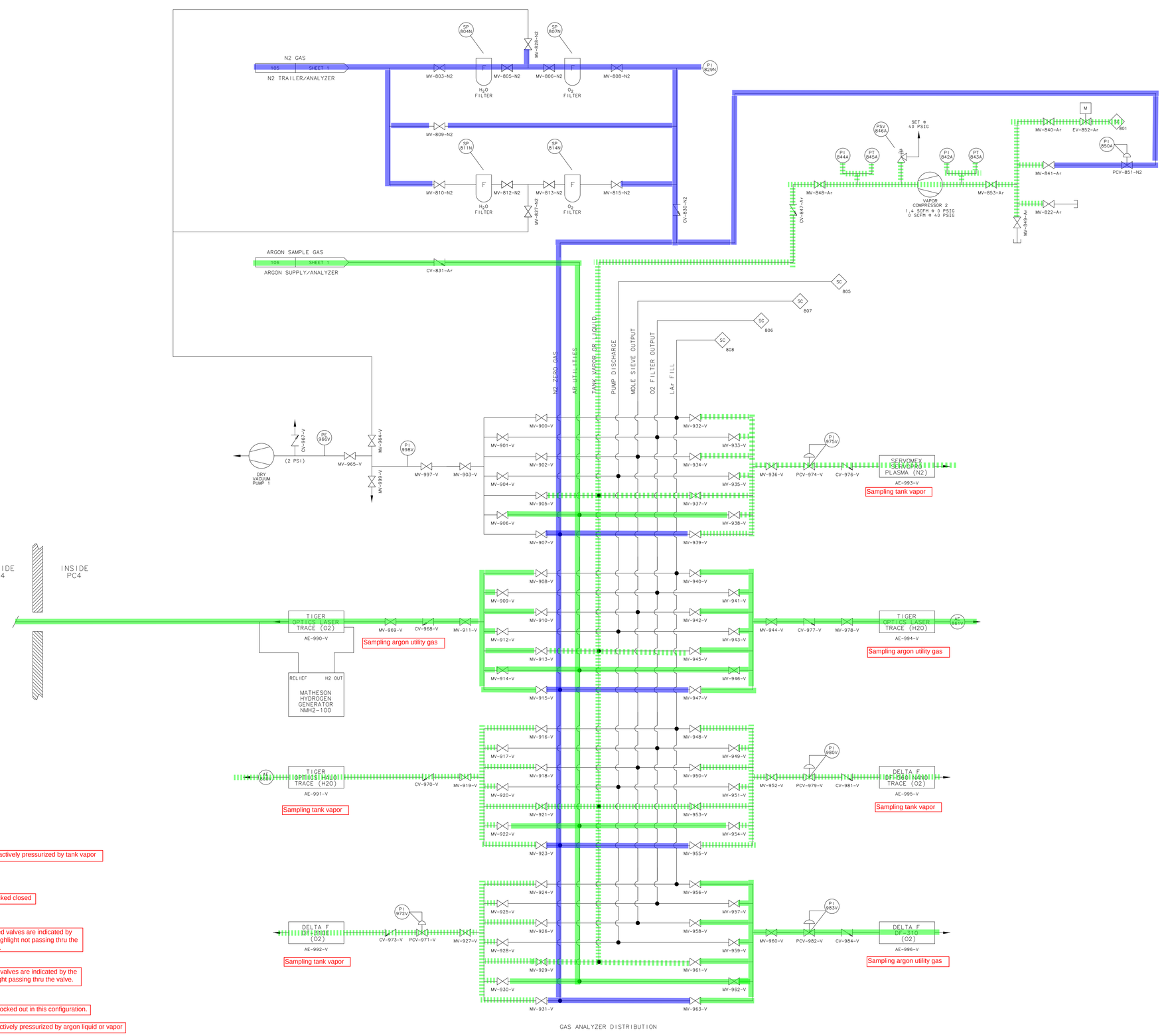

Piping actively pressurized by tank vapor

Valve locked closed

MV-237-Ar — Closed valves are indicated by the highlight not passing thru the valve.

MV-238-Ar — Open valves are indicated by the highlight passing thru the valve.

Valves locked out in this configuration.

Piping actively pressurized by argon liquid or vapor

Piping actively pressurized by nitrogen liquid or vapor

Piping actively pressurized by Hydrogen/Argon gas

Piping evacuated

Tank refrigeration on with liquid pump procedure schematic

UNLESS OTHERWISE SPECIFIED	ORIGINATOR	R.SCHMITT	26-JUN-2007
	DRAWN	J.CATALANELLO	07-DEC-2007
± ± ±	CHECKED	R.SCHMITT	12-DEC-2007
1. BREAK ALL SHARP EDGES MAX.	APPROVED	R.SCHMITT	12-DEC-2007
2. DO NOT SCALE DRAWING. 3. DIMENSIONS BASED UPON ASME Y14.5M-1994 4. MAX. ALL MACH. SURFACES	USED ON		
5. DRAWING UNITS: U.S.INCH	MATERIAL		

FERMI NATIONAL ACCELERATOR LABORATORY
UNITED STATES DEPARTMENT OF ENERGY

FLARE UTILITIES
GAS PIPING & INSTRUMENT DIAGRAM
LIQUID ARGON PURITY DEMONSTRAT'N

SCALE	DRAWING NUMBER	SHEET	REV
NONE	3942.510-ME-444897	4 OF 4	M

CREATED WITH : Ideas12NXSeries | GROUP: PPD/MECHANICAL DEPARTMENT

9 - Tank emptying procedure

A PPD engineer must be present for each step of the tank emptying procedure. If PPD has authorized unattended operation, the PPD engineer can initiate unattended operation during step 8 if the system is stable. This procedure describes emptying the liquid argon tank.

1. The following PLC loops should be active:
    a. PCV-351-Ar – tank vent to avoid tank over pressure
    b. AV-225-N2 – nitrogen supply shut-off in the event of PC4 ODH
2. Turn liquid pump control loop off.
3. Turn condenser and phase separator control loops off.
4. Configure the system valves as shown in the attached schematic. Any liquid in the piping and filters will boil off and vent thru the tank.
5. Unlock MV-633-A and remove the valve's outlet plug.
6. Connect the designated vacuum insulated flexible hose to MV-633-Ar and the electric vaporizer.
7. Turn on the electric vaporizer.
8. Slowly open MV-633-Ar. Adjust the resistance of MV-633-Ar to match the capacity of the vaporizer. The vaporizer solenoid will close if the vaporizer outlet temperature drops below – 20 F. MV-633-Ar should be adjusted to minimize the any chattering of the vaporizer solenoid valve SV-699-Ar.
9. After the tank is empty lock closed MV-633-Ar.
10. Remove the hose from the outlet of MV-633-Ar and plug the valve's outlet.
11. After the tank is empty the system should be setup as prescribed in the "Tank configuration prior to system startup procedure".

REV	DESCRIPTION	DRAWN	DATE
		APPROVED	DATE
M	MISC. REVISIONS MADE.	J.CATALANELLO	22-MAY-2012
L	MISC. REVISIONS MADE.	J.CATALANELLO T.TOPE	11-JUL-2011 01-MAR-2012
K	MISC. REVISIONS MADE.	J.CATALANELLO T.TOPE	04-MAR-2011 22-JUN-2011
J	MISC. REVISIONS MADE.	J.CATALANELLO T.TOPE	23-FEB-2011 28-FEB-2011
H	MISC. REVISIONS MADE.	J.CATALANELLO T.TOPE	10-JAN-2011 03-FEB-2011
G	MISC. REVISIONS MADE.	J.CATALANELLO T.TOPE	10-JAN-2011 12-JAN-2012
F	MISC. REVISIONS MADE.	J.CATALANELLO M.ADAMOWSKI	26-FEB-2010 26-FEB-2010
E	MISC. REVISIONS MADE.	J.CATALANELLO T.TOPE	17-NOV-2009 14-DEC-2009
D	MISC. REVISIONS MADE.	J.CATALANELLO T.TOPE	06-JAN-2009 17-NOV-2009
C	MISC. REVISIONS MADE.	J.CATALANELLO R.SCHMITT	23-DEC-2008 06-JAN-2009
B	MOVE CONDENSOR OUTSIDE TANK	J.CATALANELLO R.SCHMITT	07-DEC-2008 10-DEC-2008
A	ADDED TAG NUMBERS TO VALVE TYPES	V. MAJDANSKI R. SCHMITT	25FEB08 26FEB08

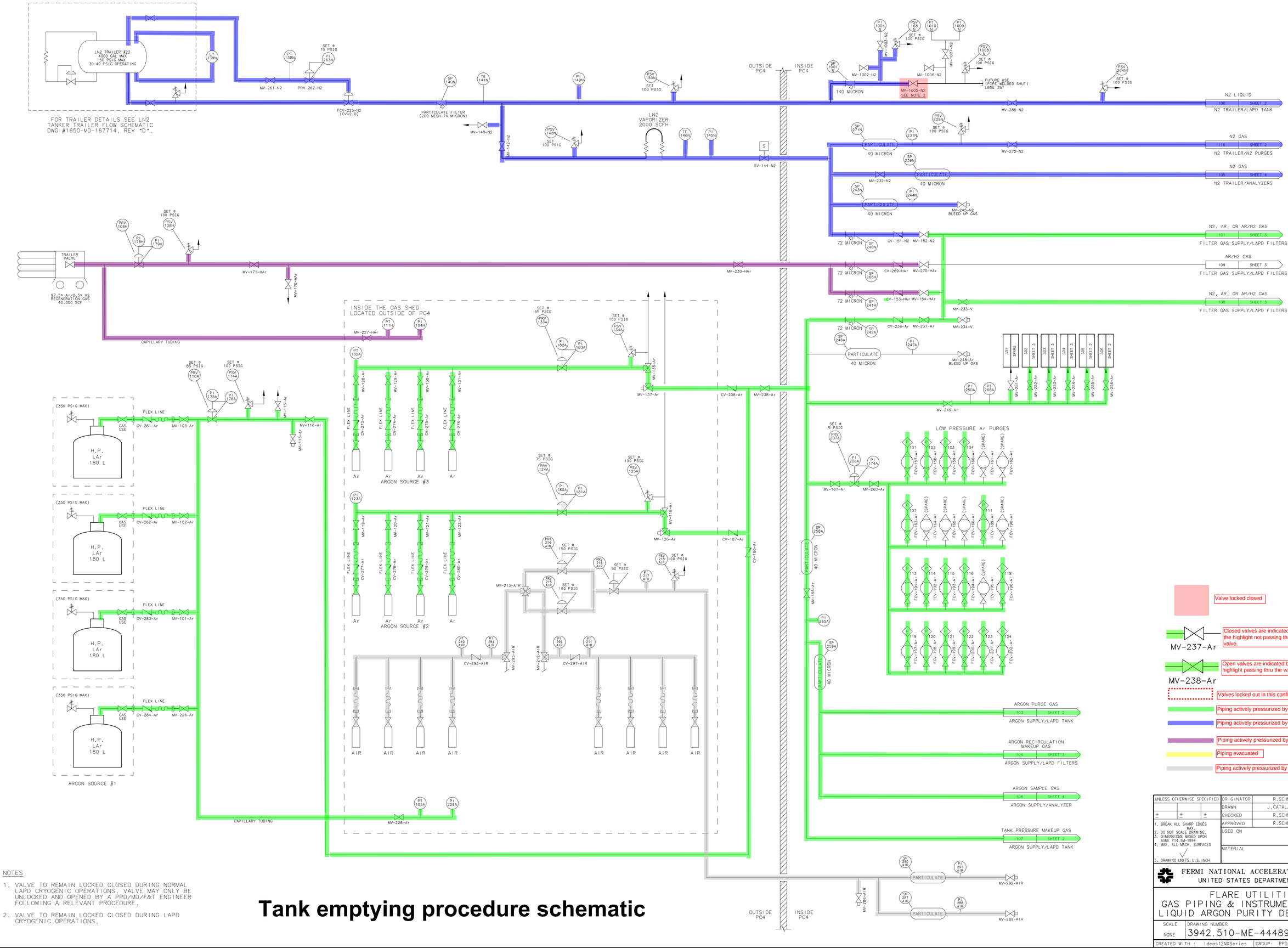

Valve locked closed

MV-237-Ar — Closed valves are indicated by the highlight not passing thru the valve.

MV-238-Ar — Open valves are indicated by the highlight passing thru the valve.

Valves locked out in this configuration.

Piping actively pressurized by argon liquid or vapor

Piping actively pressurized by nitrogen liquid or vapor

Piping actively pressurized by Hydrogen/Argon gas

Piping evacuated

Piping actively pressurized by breathable air

NOTES

1. VALVE TO REMAIN LOCKED CLOSED DURING NORMAL LAPD CRYOGENIC OPERATIONS. VALVE MAY ONLY BE UNLOCKED AND OPENED BY A PPD/MD/F&T ENGINEER FOLLOWING A RELEVANT PROCEDURE.
2. VALVE TO REMAIN LOCKED CLOSED DURING LAPD CRYOGENIC OPERATIONS.

Tank emptying procedure schematic

UNLESS OTHERWISE SPECIFIED:	ORIGINATOR	R.SCHMITT	26-JUN-2007
	DRAWN	J.CATALANELLO	07-DEC-2007
± ± ±	CHECKED	R.SCHMITT	12-DEC-2007
1. BREAK ALL SHARP EDGES MAX.	APPROVED	R.SCHMITT	12-DEC-2007
2. DO NOT SCALE DRAWING. 3. DIMENSIONS BASED UPON ASME Y14.5M-1994 4. MAX. ALL MACH. SURFACES	USED ON		
5. DRAWING UNITS: U.S. INCH	MATERIAL		

FERMI NATIONAL ACCELERATOR LABORATORY
UNITED STATES DEPARTMENT OF ENERGY

FLARE UTILITIES
GAS PIPING & INSTRUMENT DIAGRAM
LIQUID ARGON PURITY DEMONSTRAT'N

SCALE	DRAWING NUMBER	SHEET	REV
NONE	3942.510-ME-444897	1 OF 4	M

CREATED WITH : Ideas12NXSeries | GROUP: PPD/MECHANICAL DEPARTMENT

Tank emptying procedure schematic

VENTS OUTSIDE

OUTSIDE PC4

INSIDE PC4

N2 LIQUID — 100 — SHEET 1 — N2 TRAILER/LAPD TANK

MV-302-N2

(200 MESH-74 MICRON)

FCV-305-N2 (CV=2.0)

NITROGEN PHASE SEPERATOR

0.8 PSID OPERATING LEVEL HOLDS 25 GALS (95L) 0-100% LEVEL

LT 316N

MV-313-N2 / MV-314-N2 / MV-315-N2

MV-470-N2

PRV 310N — SET @ 20 PSIG

PSV 311N — SET @ 60 PSIG

PSV 306N — SET @ 100 PSIG

PI 303N / PT 304N — MV-482-N2

SP 301N

PI 309N / PT 307N

SV-319-N2 / SV-320-N2 / SV-321-N2 / SV-450-N2

LPN2 P 208 / LPN2 P 203

SP 479N — (200 MESH-74 MICRON) — FCV-312-N2 (CV=0.3)

PSV 317N — SET @ 100 PSIG

MV-495-N2

CV-494-N2

MV-415-N2

PRV 378N — SET @ 5 PSIG

PI 379N / PI 380N

N2 GAS — 110 — SHEET 1 — N2 TRAILER/N2 PURGES

MV-477-N2

201 FCV-382-N2 / 202 FCV-417-N2 / 203 FCV-449-N2 / 204 FCV-451-N2 / 205 FCV-452-N2

206 FCV-453-N2 / 207 FCV-454-N2 / 208 FCV-467-N2 / 209 FCV-664-N2 (SPARE) FCV-682-N2

211 FCV-342-N2 / 212 FCV-344-N2 / 213 FCV-345-N2 / 214 FCV-348-N2 / 215 FCV-349-N2

216 FCV-360-N2 / 217 FCV-366-N2 / 218 FCV-371-N2 / 219 FCV-373-N2 / 220 FCV-374-N2

PT 332N / PI 468N — MV-469-N2

TE 493N

PSV 335N — SET @ 100 PSIG

MV-333-N2

COIL 3: 1100 WATTS

COIL 2: 3300 WATTS

COIL 1: 4400 WATTS

ARGON CONDENSER

LPAr P 101

PSV 334A — SET @ 60 PSIG

PI 435A

MV-434-Ar

MV-466-Ar

MV-489-Ar

MV-465-Ar

MV-372-Ar

ARGON GAS — SHEET 3 — 502 — FILTERS VENTS/GAS VENT

ARGON LIQUID — 302 — SHEET 3 — LAPD CONDENSER/ARGON PUMP

PSV 329A — SET @ 100 PSIG

PSV 497A — SET @ 100 PSIG

PI 496A

MV-498-Ar

MV-499-Ar

ARGON LIQUID — SHEET 3 — 505 — LAPD TANK/ARGON PUMP

ARGON GAS — SHEET 3 — 501 — PURITY MONITOR/VENT COMPRESSOR

305 — SHEET 1 — Ar GAS-85 Psig

S SV-351-Ar

PCV 351A

MV-350-Ar

MV-354-Ar

LPAr P 103

PSV 361A — SET @ 40 PSIG

PI 460A / PI 358A / PT 359A / PI 362A / PT 363A

MV-364-Ar

MV-458-Ar / MV-341-Ar / MV-343-Ar / MV-457-Ar / MV-461-Ar

MV-347-Ar / MV-353-Ar / MV-351-Ar / MV-436-Ar

MV-459-Ar / MV-461-Ar / MV-462-Ar

PI 463A

VAPOR COMPRESSOR 1
6 SCFM @ 0 PSIG
1 SCFM @ 35 PSIG

MV-438-Ar / MV-437-Ar

MV-464-Ar

ARGON GAS — SHEET 3 — 301 — VENT COMPRESSOR/LAPD FILTERS

FO-355-1-Ar / FO-355-2-Ar / FO-355-3-Ar / FO-355-4-Ar / FO-355-5-Ar / FO-355-6-Ar / FO-355-7-Ar / FO-355-8-Ar

AE 298A / AE 299A / SC 801

FCV-221-Ar / FCV-222-Ar

MV-219-Ar / MV-220-Ar / MV-256-Ar / MV-318-Ar / MV-428-Ar

SP 484A — PARTICULATE — MV-483-Ar

PT 370A / PT 369A

FO-359-9-Ar / FO-359-10-Ar / FO-355-11-Ar / FO-355-12-Ar / FO-383-Ar / FO-429-Ar / FO-430-Ar

LPAr P 102

SET @ 3/0.2 PSIG — PSV 377A

TE 444A

RELIEF PORT

LPN2 P 206

PRM PORT

TE 443A / TE 448A

PHASE SEPERATOR

ARGON LIQUID — SHEET 3 — 500 — ARGON FILTERS/LAPD TANK

MV-367-Ar (CONTROL PLUG)

AE 365V — H2O

AE 492V / PT 267B — H2O

LPN2 P 205

ARGON LIQUID — 300 — SHEET 3 — LAPD TANK/ARGON PUMP

MV-368-Ar

LPN2 P 204

TANK PRESSURE MAKEUP GAS — 107 — SHEET 1 — ARGON SUPPLY/LAPD TANK

SP 471A — PARTICULATE — 40 MICRON

PI 431A

AV 432A — SV-432-Ar

306 — SHEET 1 — Ar GAS-85 Psig

MV-433-Ar / MV-472-Ar

LPAr P 122

PSV 491A — SET @ 20 PSIG

PI 487A

MV-485-Ar / MV-486-Ar

MV-427-Ar / MV-324-Ar / MV-327-Ar / MV-328-Ar / MV-322-Ar / MV-325-Ar

(154 IN. H2O MAX) (5.6 PSI MAX)

LIT 323A / LT 326A

MV-480-Ar

ARGON GAS — 503 — SHEET 3 — LAPD FILTERS/LAPD TANK

CV-478-Ar / MV-340-Ar

ARGON PURGE GAS — 103 — SHEET 1 — ARGON SUPPLY/LAPD TANK

FC / D / FT

CV-338-Ar / MV-339-Ar

(INITIAL TANK PURGE 5 SCFM)

FCVE 300A

MV-330-Ar

LPN2 P 202

(25 NOZZLES EACH 3/64 INCH)

TANK WALL HEAT LEAKAGE
2100 WATTS (800L/DAY)
(3.5%/DAY) (1000 SCFH)

VENT AND CONDENSER PORT

TRANSLATING ROD IN

TRANSLATING R/D PORT

LPN2 P 207

TE 445A / TE 447A

TE 446A

MV-384-Ar

FIBERGLASS AND FOAM INSULATION

LIQUID ARGON
5,875 GAL
(22,240L)
(785 ft³)
31 TONNES

TANK GAS VOLUME
870 ft³

PURITY MONITOR SHORT — PRM 1

VAPOR SPACE CAPILLARY
22.5° BELOW MAIN FLANGE

2/3 ELEVATION CAPILLARY
80° FROM BOTTOM

1/3 ELEVATION CAPILLARY
40° FROM BOTTOM

TE 5 / TE 1 / TE 6 / TE 412A / TE 2 / TE 419A / TE 7 / TE 3

LONG BO TPC

+2.25° LL3, LL4
0 LL2
-8.5° LL1

MAXIMUM LIQUID DEPTH 114.5°

TE 423A / TE 441A

TPC BIAS / TPC SIGNAL / TPC HV / TPC LCR

PURITY MONITOR LONG — PRM 2

PURITY MONITOR SHORT — PRM 4

PURITY MONITOR LONG — PRM 3

HTR 385A / 386A / 387A / 388A / 389A / 390A / 391A / 392A / 393A / 394A / 395A / 396A

HTR 397A / 398A / 399A / 400A / 401A / 402A / 403A / 404A / 405A / 406A / 407A / 408A

TE 409A / 410A / 411A / 413A / 414A / 418A / 420A / 421A / 422A / 439A / 440A / 442A

Valve locked closed

Closed valves are indicated by the highlight not passing thru the valve.

MV-237-Ar

Open valves are indicated by the highlight passing thru the valve.

MV-238-Ar

Valves locked out in this configuration.

Piping actively pressurized by argon liquid or vapor

Piping actively pressurized by nitrogen liquid or vapor

Piping actively pressurized by Hydrogen/Argon gas

Piping evacuated

UNLESS OTHERWISE SPECIFIED			ORIGINATOR	R.SCHMITT	26-JUN-2007
			DRAWN	J.CATALANELLO	07-DEC-2007
±	±	±	CHECKED	R.SCHMITT	12-DEC-2007
1. BREAK ALL SHARP EDGES MAX.			APPROVED	R.SCHMITT	12-DEC-2007
2. DO NOT SCALE DRAWING. 3. DIMENSIONS BASED UPON ASME Y14.5M-1994 4. MAX., ALL MACH. SURFACES			USED ON		
5. DRAWING UNITS: U.S. INCH			MATERIAL		

FERMI NATIONAL ACCELERATOR LABORATORY
UNITED STATES DEPARTMENT OF ENERGY

FLARE UTILITIES
GAS PIPING & INSTRUMENT DIAGRAM
LIQUID ARGON PURITY DEMONSTRAT'N

SCALE	DRAWING NUMBER	SHEET	REV
NONE	3942.510-ME-444897	2 OF 4	M

CREATED WITH : Ideas12NXSeries | GROUP: PPD/MECHANICAL DEPARTMENT

version 11.13.12 page 63

Created: 08:12:10 on 18-10-12 (D-M-Y) By: catalan State: 1-INITIAL

Tank emptying procedure schematic

N2,Ar, OR Ar/H2 GAS
108 SHEET 1
FILTER GAS SUPPLY/LAPD FILTERS

Ar/H2 GAS
109 SHEET 1
FILTER GAS SUPPLY/LAPD FILTERS

N2, AR, OR Ar/H2 GAS
101 SHEET 1
FILTER GAS SUPPLY/LAPD FILTERS

ARGON GAS
SHEET 2 502
FILTER VENTS/GAS VENT

ARGON GAS
SHEET 2 501
PURITY MONITOR/VENT COMPRESSOR

ARGON GAS
SHEET 2 503
LAPD FILTERS/LAPD TANK

ARGON LIQUID
SHEET 2 500
ARGON FILTERS/LAPD TANK

ARGON GAS
301 SHEET 2
VENT COMPRESSOR/LAPD FILTERS

ARGON RECIRCULATION MAKEUP GAS
104 SHEET 1
ARGON SUPPLY/LAPD FILTERS

ARGON LIQUID
SHEET 2 505
LAPD TANK/ARGON PUMP

ARGON LIQUID
302 SHEET 2
LAPD CONDENSER/ARGON PUMP

ARGON LIQUID
300 SHEET 2
LAPD TANK/ARGON PUMP

303 SHEET 1
Ar GAS-85 Psig

302 SHEET 1
Ar GAS-85 Psig

304 SHEET 1
Ar GAS-85 Psig

MV-710-HAr
FCV-711-HAr
FCV-713-HAr
FCV-709-HAr
AE 702H
MV-712-HAr
MV-708-HAr
PI 707H
MV-687-HAr (DRAIN)
MV-686-HAr (DRAIN)
AE 566H H2O
AE 576H H2O
VENT OUTSIDE
VENT OUTSIDE
INSIDE PC4
OUTSIDE PC4

SV-562-Ar
FCV 562A
SV-706-HAr
PI 715H
MV-716-HAr
FCV-714-HAr
PI 533H
PT 534H
FCV-592-HAr
SP 473H
PARTICULATE 5 MICRON
SV-705-HAr
(1200W, 2.3 SCFM MIN FLOW)
PI 684H
HTR 612H
TE 635H
TE 636H
TE 637H
MV-535-HAr
700 SCFH Ar FLOW TYPICAL
MV-685-HAr
HTR 634H
TE 638H
TE 639H
TE 640H
(1200W, 2.3 SCFM MIN FLOW)
MV-539-HAr SEE NOTE 1

PI 589A
PT 590A
LPAr 111
LT 586A
MV-694-Ar SEE NOTE 1
PSV 587A SET @ 100 PSIG
MV-560-Ar
LPAr 113
PSV 615A SET @ 100 PSIG
PSV-696-Ar SET @ 100 PSIG
MV-695-Ar
MV-697-Ar
MV-691-Ar
PT 704A
PI 673A
MV-675-Ar
VACUUM BREAK
FUTURE USE LBNE 35T
MV-5002-Ar SEE NOTE 2
SP 476A
PARTICULATE 15 MICRON
VACUUM BREAK
MV-593-Ar
INLINE PURITY MONITOR LONG 14L 26.9 INCH OPERATING LEVEL
PRM
PSV 672V SET @ 0 PSIG
SV-557-Ar
FO-722-Ar
AV-557-Ar
LPAr 114
PSV 683A SET @ 100 PSIG
PI 678A
PT 703A
MV-677-Ar
(CONTROL PLUG)
MV-674-Ar
MV-559-Ar SEE NOTE 1

LAr VAPORIZER
PI 697A
TE 611A
TS 700A
HTR 701A
SET @ 100 PSIG
PSV 693A
SV-699-Ar
(30KW, 7,500 SCFH)
VENTS OUTSIDE
FLEXIBLE HOSE
FLEXIBLE HOSE

MV-676-Ar
MV-667-Ar
SP 721A
PARTICULATE 15 MICRON
VACUUM BREAK
TE 574H
PT 570A OXYGEN FILTER TO GAS ANALYZERS
PI 571A
LPAr 120
SC 806
MV-513-HAr
MV-572-Ar
MV-569-Ar
PSV 568A SET @ 100 PSIG
SET @ 0 PSIG PSV 671V
MV-565-HAr
TE 542A
PT 603A MOLECULAR SIEVE TO GAS ANALYZERS
PI 604A
LPAr 124
SC 807
MV-540-Ar
MV-541-Ar
MV-602-Ar
PSV 601A SET @ 100 PSIG
SET @ 0 PSIG PSV 670V
MV-573-HAr
VACUUM BREAK
VACUUM BREAK
MV-554-Ar
VACUUM BREAK
(CONTROL PLUG)
MV-553-Ar
MV-549-Ar
PARTICULATE 20 MICRON
MV-681-Ar
PI 680A
SP 474A
PSV 548A SET @ 100 PSIG
PI 545A
SC 808
PSV 543A SET @ 100 PSIG
SP 620A (200 MESH-72 MICRON)
MV-544-Ar
MV-547-Ar
LAr TRUCK CONNECTION MAX OPERATING SUPPLY PRESSURE 70 PSIG
USED FOR FILLING & SPECIAL NEED ONLY. TRAILER PUMP MUST BE LOCKED OUT DURING FILL.
NOTE:
SEE DWG#489659 FOR DETAILS OF FERMILAB LAr TRAILER

TE 626A
TE 627A
TE 628A
TE 629A
TE 630A
PT 669V
77L
COPPER
TE 621A
TE 622A
TE 623A
TE 624A
TE 625A
PT 668V
77L
MOLE SIEVE

PI 551A
PI 552A
LPAr 115
PSV 531A SET @ 100 PSIG
MV-550-Ar
CV-532-Ar
MV-610-Ar
MV-527-Ar
MV-609-Ar
FCVE 606A
FC D
FT
(29.6 SCFH Ar MAX)
CV-607-Ar
MV-608-Ar
VACUUM BREAK
(CONTROL PLUG)
MV-516-Ar FILTER BYPASS

PI 653A
MV-654-Ar
LPAr 121
PSV 500A SET @ 100 PSIG
LPAr 123
PSV 517A SET @ 100 PSIG
PI 655A
MV-563-Ar
PI 650A
LPAr 104
SET @ 100 PSIG
SV-501-Ar
PI 651A
AV 501A
MV-652-Ar
2" SCH 10 INNER PIPE
PURIFICATION AUTO SHUTOFF
CONDENSER RETURN
MV-502-Ar
FLEXIBLE HOSE
MV-633-Ar SEE NOTE 1
DPT 656A
PI 657A
MV-658-Ar
MV-659-Ar
MV-660-Ar
MV-506-Ar
SP 475A
MV-717-Ar
(234 MICRON)
PI 509A
PI 510A
MV-508-Ar
DPT 507A
SC 504A
M
PT 505A
PSV-666-V (0 PSIG)
TE 662A
LIQUID PUMP (12.5 GPM AT 50.7 PSID AND 5700 RPM) (8 HR TIME CONSTANT) (5000 HR BEARING LIFE) (6300 RPM MAX AT 105HZ)
MV-511-Ar
MV-512-Ar
SC 805
MV-718-Ar
LPAr 107
PSV 663A SET @ 100 PSIG
PSV 720A SET @ 100 PSIG
LPAr 119
MV-719-Ar
PI 698A
MV-661-Ar SEE NOTE 2
FLEXIBLE HOSE
LPAr 118
PSV 598A SET @ 100 PSIG
PI 690A
MV-689-Ar
MV-688-Ar
(CONTROL PLUG)
MV-514-Ar
MV-599-Ar 1" SCH 10 INNER PIPE
MV-5001-Ar SEE NOTE 2
VACUUM BREAK
FUTURE USE LBNE 35T
PSV 564A
LPAr 116
SET @ 100 PSIG
MV-597-Ar
PI 665A
MV-594-Ar
FT
FT-595-Ar
LPN2
P 209
FOAM INSULATION
MV-596-Ar

MV-237-Ar
Closed valves are indicated by the highlight not passing thru the valve.
MV-238-Ar
Open valves are indicated by the highlight passing thru the valve.
Valves locked out in this configuration.
Piping actively pressurized by argon liquid or vapor
Piping actively pressurized by nitrogen liquid or vapor
Piping actively pressurized by Hydrogen/Argon gas
Piping evacuated
Valve locked closed

NOTES

1. VALVE TO REMAIN LOCKED CLOSED DURING NORMAL LAPD CRYOGENIC OPERATIONS. VALVE MAY ONLY BE UNLOCKED AND OPENED BY A PPD/MD/F&T ENGINEER FOLLOWING A RELEVANT PROCEDURE.
2. VALVE TO REMAIN LOCKED CLOSED DURING LAPD CRYOGENIC OPERATIONS.

UNLESS OTHERWISE SPECIFIED	ORIGINATOR	R.SCHMITT	26-JUN-2007
	DRAWN	J.CATALANELLO	07-DEC-2007
± ± ±	CHECKED	R.SCHMITT	12-DEC-2007
1. BREAK ALL SHARP EDGES MAX.	APPROVED	R.SCHMITT	12-DEC-2007
2. DO NOT SCALE DRAWING. 3. DIMENSIONS BASED UPON ASME Y14.5M-1994 4. MAX. ALL MACH. SURFACES	USED ON		
5. DRAWING UNITS: U.S. INCH	MATERIAL		

FERMI NATIONAL ACCELERATOR LABORATORY
UNITED STATES DEPARTMENT OF ENERGY

FLARE UTILITIES
GAS PIPING & INSTRUMENT DIAGRAM
LIQUID ARGON PURITY DEMONSTRAT'N

SCALE	DRAWING NUMBER	SHEET	REV
NONE	3942.510-ME-444897	3 OF 4	M

CREATED WITH : Ideas12NXSeries | GROUP: PPD/MECHANICAL DEPARTMENT

version 11.13.12 page 64

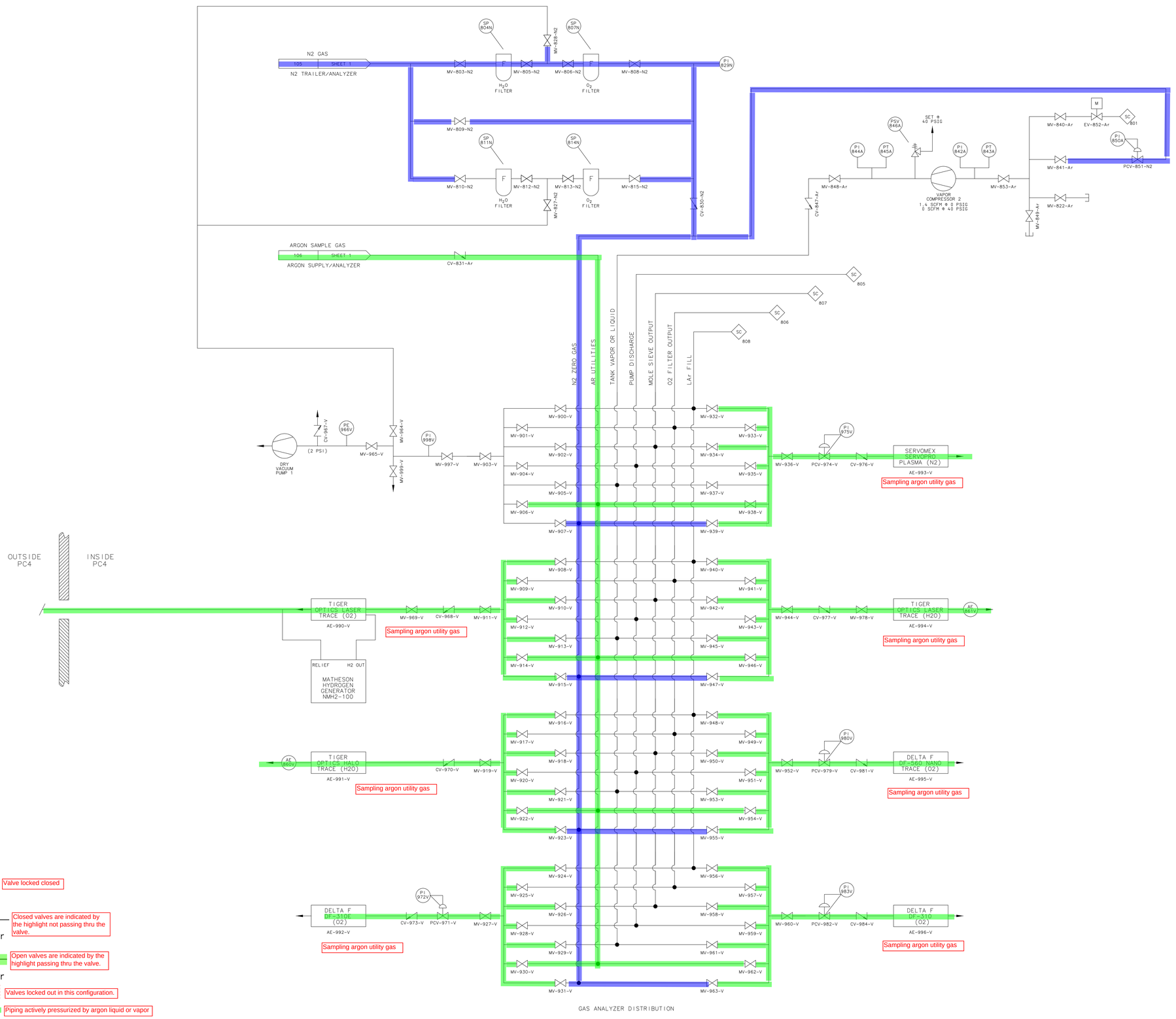

Valve locked closed

MV-237-Ar — Closed valves are indicated by the highlight not passing thru the valve.

MV-238-Ar — Open valves are indicated by the highlight passing thru the valve.

Valves locked out in this configuration.

Piping actively pressurized by argon liquid or vapor

Piping actively pressurized by nitrogen liquid or vapor

Piping actively pressurized by Hydrogen/Argon gas

Piping evacuated

Tank emptying procedure schematic

UNLESS OTHERWISE SPECIFIED	ORIGINATOR	R.SCHMITT	26-JUN-2007
	DRAWN	J.CATALANELLO	07-DEC-2007
± ± ±	CHECKED	R.SCHMITT	12-DEC-2007
1. BREAK ALL SHARP EDGES MAX.	APPROVED	R.SCHMITT	12-DEC-2007
2. DO NOT SCALE DRAWING. 3. DIMENSIONS BASED UPON ASME Y14.5M-1994 4. MAX. ALL MACH. SURFACES	USED ON		
5. DRAWING UNITS: U.S.INCH	MATERIAL		

FERMI NATIONAL ACCELERATOR LABORATORY
UNITED STATES DEPARTMENT OF ENERGY

FLARE UTILITIES
GAS PIPING & INSTRUMENT DIAGRAM
LIQUID ARGON PURITY DEMONSTRAT'N

SCALE	DRAWING NUMBER	SHEET	REV
NONE	3942.510-ME-444897	4 OF 4	M

CREATED WITH : Ideas12NXSeries | GROUP: PPD/MECHANICAL DEPARTMENT

version 11.13.12 page 65

10 - Oxygen and molecular sieve filter regeneration procedure with liquid in tank

A PPD engineer must be present for all steps of this procedure. If PPD has approved unattended operation a PPD engineer may initiate unattended operation during the PLC control phase once the process is stable. This procedures details regenerating the oxygen and molecular sieve filters if there is liquid argon in the tank.

1. The oxygen filter may be regenerated with or without liquid argon in the tank.
2. The following PLC loops should be active:
    a. AV-432-Ar – argon makeup gas to avoid tank vacuum
    b. PCV-351-Ar – tank vent to avoid tank over pressure
    c. AV-225-N2 – nitrogen supply shut-off in the event of PC4 ODH
    d. Compressor #1 - shutoff to avoid tank vacuum
    e. Compressor #2 - shutoff to avoid tank vacuum
    f. Vacuum pump #1 – shuts off to avoid tank vacuum
3. Turn off the liquid argon circulation pump.
4. Lock closed MV-368-Ar.
5. Lock closed MV-465-Ar.
6. Allow liquid argon in piping and filters to boil off.
7. Wait for filter RTDs to indicate a temperature greater than 0 C.
8. Close MV-367-Ar to isolate tank from piping.
9. **Configure the system valves as shown in the attached schematic entitled "Oxygen filter regeneration procedure schematic (with liquid argon in tank)."**
10. Open FCV-592-HAr and adjust to 500 SCFH.
11. Turn on the oxygen filter regeneration heater PLC control loop. Make the heater set points 150 C and heater power limit 50%. Wait for the filter bed temperatures to stabilize. This may take several hours.
12. Slowly open FCV-714-HAr and adjust the flow of 2.5%H2 / 97.5%Ar to 10 SCFH. Watch for filter bed self-heating at all subsequent steps. If self heating occurs then pause until conditions stabilize. Reduce H2/Ar flow if its necessary to reduce self heating in this step or subsequent steps.
13. After 1 hour, increase the flow of H2 / Ar to 30 SCFH as indicated by FCV-714-HAr.
14. After 1 hour, increase the flow of H2 / Ar to 60 SCFH as indicated by FCV-714-HAr.
15. After 1 hour, increase the flow of H2 / Ar to 100 SCFH as indicated by FCV-714-HAr.
16. After 1 hour, increase the heater set points to 175 C and heater power limit to 75%.
17. After 1 hour, increase the heater set points to 200 C and heater power limit to 100%.
18. After 1 hour, increase the heater set points to 225 C.
19. After 1 hour, increase the heater set points to 250 C.

20. Allow bed temperatures to stabilize. Once the bed temperatures are stable, oxygen filter regeneration is complete when AE-566-Ar reaches an asymptotic low.
21. After the oxygen filter regeneration is complete turn off the gas heaters using the PLC.
22. Close both FCV-592-HAr and FCV-714-HAr.
23. Close MV-565-HAr.
24. Close MV-535-HAr and MV-685-HAr.
25. Close MV-270-HAr.
26. Connect a turbo vacuum cart to MV-539-HAr.
27. Open MV-539-HAr and vacuum pump on the oxygen filter while it cools to room temperature.
28. Close MV-539-HAr and disconnect the turbo vacuum cart.
29. Turn on “Dry Vacuum Pump 1” and measure the base vacuum using PE-996-V. When the base vacuum is less then 100 microns proceed to the next step.
30. Open MV-965-V, MV-997-V, MV-903-V, MV-901-V and evacuate to 100 microns as indicated by PE-996-V.
31. Close MV-965-V.
32. Open MV-906-V and back fill the oxygen filter with argon utility gas to 15 psig. Modulate the flow using MV-901-V to keep the pressure indicated by PI-998-V positive.
33. Close MV-906-V, MV-997-V, MV-903-V, MV-901-V
34. **Configure the system valves as shown in the attached schematic entitled “Water filter regeneration schematic (with liquid argon in tank)**.”
35. Open FCV-592-HAr and adjust flow 500 SCFH.
36. Turn on the molecular sieve filter regeneration heater PLC control loop. Make the heater set points 250 C and heater power limit 100%. Wait for the filter bed temperatures to stabilize. This may take several hours.
37. Molecular sieve filter regeneration is complete when AE-576-Ar reaches an asymptotic low.
38. After the molecular sieve filter regeneration is complete turn off the gas heaters using the PLC.
39. Close FCV-592-HAr.
40. Close MV-573-HAr.
41. Close MV-535-HAr and MV-685-HAr.
42. Connect a turbo vacuum cart to MV-539-HAr.
43. Open MV-539-HAr and vacuum pump the molecular sieve filter while it cools to room temperature.
44. Close MV-539-HAr and disconnect the turbo vacuum cart.
45. Turn on “Dry Vacuum Pump 1” and measure the base vacuum using PE-996-V. When the base vacuum is less then 100 microns proceed to the next step.
46. Open MV-965-V, MV-997-V, MV-903-V, MV-902-V and evacuate to 100 microns as indicated by PE-996-V.

47. Close MV-965-V.
48. Open MV-906-V and back fill the oxygen filter with argon utility gas to 15 psig. Modulate the flow using MV-902-V to keep the pressure indicated by PI-998-V positive.
49. Close MV-906-V, MV-997-V, MV-903-V, MV-902-V
50. Unlock MV-368-Ar but do not open.
51. Unlock MV-465-Ar but do not open.
52. Proceed to “Tank refrigeration with liquid pump”.

REV	DESCRIPTION	DRAWN	DATE
M	MISC. REVISIONS MADE.	J.CATALANELLO	22-MAY-2012
F	MISC. REVISIONS MADE.	J.CATALANELLO	26-FEB-2010
		M.ADAMOWSKI	26-FEB-2010
G	MISC. REVISIONS MADE.	J.CATALANELLO	10-JAN-2011
		T.TOPE	12-JAN-2012
H	MISC. REVISIONS MADE.	J.CATALANELLO	10-JAN-2011
		T.TOPE	03-FEB-2011
J	MISC. REVISIONS MADE.	J.CATALANELLO	23-FEB-2011
		T.TOPE	28-FEB-2011
K	MISC. REVISIONS MADE.	J.CATALANELLO	04-MAR-2011
		T.TOPE	22-JUN-2011
L	MISC. REVISIONS MADE.	J.CATALANELLO	11-JUL-2011
		T.TOPE	01-MAR-2012
A	ADDED TAG NUMBERS TO VALVE TYPES	V. MAJDANSKI	25FEB08
		R. SCHMITT	26FEB08
B	MOVE CONDENSOR OUTSIDE TANK	J.CATALANELLO	07-DEC-2008
		R.SCHMITT	10-DEC-2008
C	MISC. REVISIONS MADE.	J.CATALANELLO	23-DEC-2008
		R.SCHMITT	06-JAN-2009
D	MISC. REVISIONS MADE.	J.CATALANELLO	17-NOV-2009
		T.TOPE	14-DEC-2009
E	MISC. REVISIONS MADE.	J.CATALANELLO	17-NOV-2009
		T.TOPE	15-JAN-2010

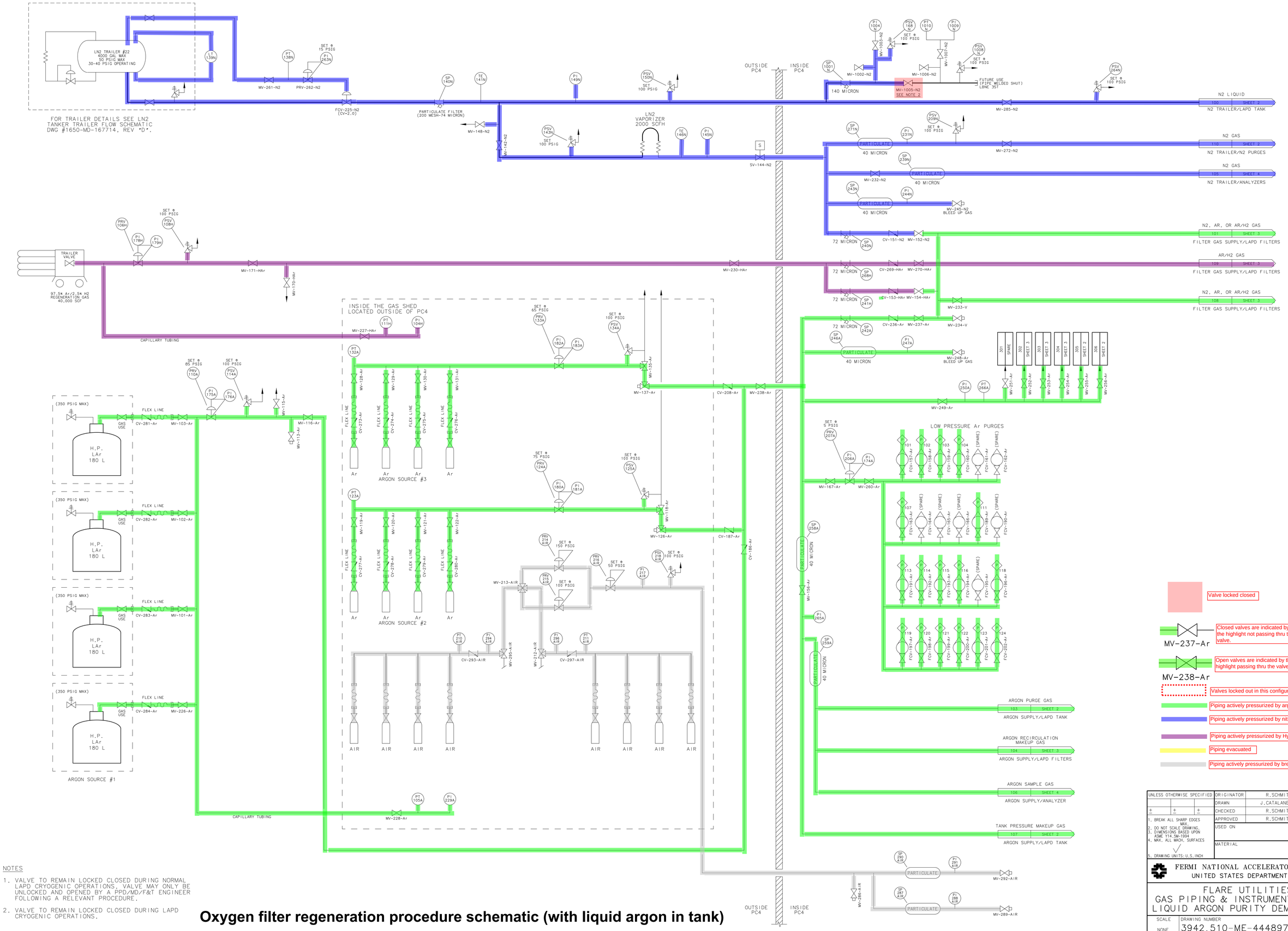

Valve locked closed

MV-237-Ar — Closed valves are indicated by the highlight not passing thru the valve.

MV-238-Ar — Open valves are indicated by the highlight passing thru the valve.

Valves locked out in this configuration.

Piping actively pressurized by argon liquid or vapor

Piping actively pressurized by nitrogen liquid or vapor

Piping actively pressurized by Hydrogen/Argon gas

Piping evacuated

Piping actively pressurized by breathable air

NOTES

1. VALVE TO REMAIN LOCKED CLOSED DURING NORMAL LAPD CRYOGENIC OPERATIONS. VALVE MAY ONLY BE UNLOCKED AND OPENED BY A PPD/MD/F&T ENGINEER FOLLOWING A RELEVANT PROCEDURE.
2. VALVE TO REMAIN LOCKED CLOSED DURING LAPD CRYOGENIC OPERATIONS.

Oxygen filter regeneration procedure schematic (with liquid argon in tank)

UNLESS OTHERWISE SPECIFIED			ORIGINATOR	R.SCHMITT	26-JUN-2007
			DRAWN	J.CATALANELLO	07-DEC-2007
±	±	±	CHECKED	R.SCHMITT	12-DEC-2007
1. BREAK ALL SHARP EDGES MAX.			APPROVED	R.SCHMITT	12-DEC-2007
2. DO NOT SCALE DRAWING. 3. DIMENSIONS BASED UPON ASME Y14.5M-1994 4. MAX. ALL MACH. SURFACES			USED ON		
5. DRAWING UNITS: U.S. INCH			MATERIAL		

FERMI NATIONAL ACCELERATOR LABORATORY
UNITED STATES DEPARTMENT OF ENERGY

FLARE UTILITIES
GAS PIPING & INSTRUMENT DIAGRAM
LIQUID ARGON PURITY DEMONSTRAT'N

SCALE	DRAWING NUMBER	SHEET	REV
NONE	3942.510-ME-444897	1 OF 4	M

CREATED WITH : Ideas12NXSeries | GROUP: PPD/MECHANICAL DEPARTMENT

Oxygen filter regeneration procedure schematic (with liquid argon in tank)

VENTS OUTSIDE
OUTSIDE PC4
INSIDE PC4
N2 LIQUID
N2 TRAILER/LAPD TANK
NITROGEN PHASE SEPERATOR
0.8 PSID OPERATING LEVEL HOLDS 25 GALS (95L) 0-100% LEVEL
ARGON CONDENSER
COIL 3: 1100 WATTS
COIL 2: 3300 WATTS
COIL 1: 4400 WATTS
N2 GAS
N2 TRAILER/N2 PURGES
TANK PRESSURE MAKEUP GAS
ARGON SUPPLY/LAPD TANK
PARTICULATE
40 MICRON
ARGON PURGE GAS
ARGON GAS
LAPD FILTERS/LAPD TANK
ARGON LIQUID
LAPD CONDENSER/ARGON PUMP
LAPD TANK/ARGON PUMP
PURITY MONITOR/VENT COMPRESSOR
FILTERS VENTS/GAS VENT
VENT COMPRESSOR/LAPD FILTERS
ARGON FILTERS/LAPD TANK
Ar GAS-85 Psig
VAPOR COMPRESSOR 1
6 SCFM @ 0 PSIG
1 SCFM @ 35 PSIG
VENT AND CONDENSER PORT
TRANSLATING RTD PORT
PRM PORT
TPC BIAS
TPC SIGNAL
TPC HV
TPC LCR
RELIEF PORT
PHASE SEPERATOR
LONG BO TPC
LIQUID ARGON 5,875 GAL (22,240L) (785 ft³) 31 TONNES
TANK GAS VOLUME 870 ft³
VAPOR SPACE CAPILLARY 22.5° BELOW MAIN FLANGE
2/3 ELEVATION CAPILLARY 80° FROM BOTTOM
1/3 ELEVATION CAPILLARY 40° FROM BOTTOM
PURITY MONITOR SHORT
PURITY MONITOR LONG
MAXIMUM LIQUID DEPTH 114.5"
+2.25" LL3, LL4
0 LL2
-8.5" LL1
FIBERGLASS AND FOAM INSULATION
(25 NOZZLES EACH 3/64 INCH)
TANK WALL HEAT LEAKAGE
2100 WATTS (800L/DAY)
(3.5%/DAY) (1000 SCFH)
(INITIAL TANK PURGE 5 SCFM)
(154 IN. H2O MAX) (5.6 PSI MAX)
(200 MESH-74 MICRON)

Valve locked closed

Closed valves are indicated by the highlight not passing thru the valve.

MV-237-Ar

Open valves are indicated by the highlight passing thru the valve.

MV-238-Ar

Valves locked out in this configuration.

Piping actively pressurized by argon liquid or vapor

Piping actively pressurized by nitrogen liquid or vapor

Piping actively pressurized by Hydrogen/Argon gas

Piping evacuated

UNLESS OTHERWISE SPECIFIED		ORIGINATOR	R.SCHMITT	26-JUN-2007
		DRAWN	J.CATALANELLO	07-DEC-2007
±	± ±	CHECKED	R.SCHMITT	12-DEC-2007
1. BREAK ALL SHARP EDGES MAX. 2. DO NOT SCALE DRAWING. 3. DIMENSIONS BASED UPON ASME Y14.5M-1994 4. MAX., ALL MACH. SURFACES 5. DRAWING UNITS: U.S. INCH		APPROVED	R.SCHMITT	12-DEC-2007
		USED ON		
		MATERIAL		

FERMI NATIONAL ACCELERATOR LABORATORY
UNITED STATES DEPARTMENT OF ENERGY

FLARE UTILITIES
GAS PIPING & INSTRUMENT DIAGRAM
LIQUID ARGON PURITY DEMONSTRAT'N

SCALE	DRAWING NUMBER	SHEET	REV
NONE	3942.510-ME-444897	2 OF 4	M

CREATED WITH : Ideas12NXSeries | GROUP: PPD/MECHANICAL DEPARTMENT

version 11.13.12 page 70

Oxygen filter regeneration procedure schematic (with liquid argon in tank)

N2,Ar, OR Ar/H2 GAS — 108 SHEET 1 — FILTER GAS SUPPLY/LAPD FILTERS
Ar/H2 GAS — 109 SHEET 1 — FILTER GAS SUPPLY/LAPD FILTERS
N2, AR, OR Ar/H2 GAS — 101 SHEET 1 — FILTER GAS SUPPLY/LAPD FILTERS
ARGON GAS — SHEET 2 502 — FILTER VENTS/GAS VENT
ARGON GAS — SHEET 2 501 — PURITY MONITOR/VENT COMPRESSOR
ARGON GAS — SHEET 2 503 — LAPD FILTERS/LAPD TANK
ARGON LIQUID — SHEET 2 500 — ARGON FILTERS/LAPD TANK
ARGON GAS — 301 SHEET 2 — VENT COMPRESSOR/LAPD FILTERS
ARGON RECIRCULATION MAKEUP GAS — 104 SHEET 1 — ARGON SUPPLY/LAPD FILTERS
ARGON LIQUID — SHEET 2 505 — LAPD TANK/ARGON PUMP
ARGON LIQUID — 302 SHEET 2 — LAPD CONDENSER/ARGON PUMP
ARGON LIQUID — 300 SHEET 2 — LAPD TANK/ARGON PUMP
303 SHEET 1 — Ar GAS-85 Psig
302 SHEET 1 — Ar GAS-85 Psig
304 SHEET 1 — Ar GAS-85 Psig

SV-562-Ar, FCV 562A, SV-706-HAr, FCV-714-HAr, SV-592-HAr, SV-705-HAr, SV-557-Ar, SV-699-Ar, SV-501-Ar, SV-502-Ar
MV-716-HAr, MV-710-HAr, FCV-711-HAr, MV-712-HAr, FCV-713-HAr, MV-708-HAr, FCV-709-HAr, MV-687-HAr (DRAIN), MV-686-HAr (DRAIN), MV-560-Ar, MV-694-Ar SEE NOTE 1, MV-695-Ar, MV-696-Ar, MV-697-Ar, MV-691-Ar, MV-675-Ar, MV-5002-Ar SEE NOTE 2, MV-593-Ar, MV-677-Ar, MV-674-Ar, MV-559-Ar SEE NOTE 1, MV-676-Ar, MV-667-Ar, MV-535-HAr, MV-685-HAr, MV-539-HAr SEE NOTE 1, MV-565-HAr, MV-573-HAr, MV-513-Ar, MV-572-Ar, MV-569-Ar, MV-540-Ar, MV-541-Ar, MV-602-Ar, MV-554-Ar, MV-553-Ar, MV-549-Ar, MV-544-Ar, MV-547-Ar, MV-685-Ar, MV-684-Ar, MV-554-Ar, MV-550-Ar, CV-532-Ar, MV-610-Ar, MV-527-Ar, MV-609-Ar, CV-607-Ar, MV-608-Ar, MV-633-Ar SEE NOTE 1, MV-658-Ar, MV-659-Ar, MV-660-Ar, MV-506-Ar, MV-508-Ar, MV-718-Ar, MV-719-Ar, MV-661-Ar SEE NOTE 2, MV-563-Ar, MV-657-Ar, MV-509-Ar, MV-510-Ar, MV-511-Ar, MV-512-Ar, MV-514-Ar, MV-5001-Ar SEE NOTE 2, MV-599-Ar, MV-688-Ar, MV-689-Ar, MV-597-Ar, MV-594-Ar, MV-596-Ar, MV-516-Ar FILTER BYPASS

SP 473H, SP 721A, SP 476A, SP 474A, SP 620A
PARTICULATE 5 MICRON, PARTICULATE 15 MICRON, PARTICULATE 20 MICRON, PARTICULATE (234 MICRON)
(1200W, 2.3 SCFM MIN FLOW), 700 SCFH Ar FLOW TYPICAL, (1200W, 2.3 SCFM MIN FLOW)
VACUUM BREAK, (CONTROL PLUG), FLEXIBLE HOSE, TO LAr VAPORIZER, CONDENSER RETURN
VENTS OUTSIDE, VENT OUTSIDE, VENT OUTSIDE, H2O
INSIDE PC4, OUTSIDE PC4

LAr VAPORIZER (30KW, 7,500 SCFH)
INLINE PURITY MONITOR LONG 14L 26.9 INCH OPERATING LEVEL
OXYGEN FILTER TO GAS ANALYZERS
MOLECULAR SIEVE TO GAS ANALYZERS
77L COPPER
77L MOLE SIEVE
LIQUID PUMP (12.5 GPM AT 50.7 PSID AND 5700 RPM) (8 HR TIME CONSTANT) (5000 HR BEARING LIFE) (6300 RPM MAX AT 105HZ)
(29.6 SCFH Ar MAX)
FOAM INSULATION
LAr TRUCK CONNECTION MAX OPERATING SUPPLY PRESSURE 70 PSIG
USED FOR FILLING & SPECIAL NEED ONLY. TRAILER PUMP MUST BE LOCKED OUT DURING FILL.
NOTE: SEE DWG#489659 FOR DETAILS OF FERMILAB LAr TRAILER
(200 MESH-72 MICRON)
2" SCH 10 INNER PIPE
1" SCH 10 INNER PIPE
PURIFICATION AUTO SHUTOFF
FUTURE USE LBNE 35T
VACUUM BREAK

NOTES

1. VALVE TO REMAIN LOCKED CLOSED DURING NORMAL LAPD CRYOGENIC OPERATIONS. VALVE MAY ONLY BE UNLOCKED AND OPENED BY A PPD/MD/F&T ENGINEER FOLLOWING A RELEVANT PROCEDURE.
2. VALVE TO REMAIN LOCKED CLOSED DURING LAPD CRYOGENIC OPERATIONS.

Closed valves are indicated by the highlight not passing thru the valve. MV-237-Ar
Open valves are indicated by the highlight passing thru the valve. MV-238-Ar
Valves locked out in this configuration.
Piping actively pressurized by argon liquid or vapor
Piping actively pressurized by nitrogen liquid or vapor
Piping actively pressurized by Hydrogen/Argon gas
Piping evacuated
Valve locked closed

UNLESS OTHERWISE SPECIFIED	ORIGINATOR	R.SCHMITT	26-JUN-2007
	DRAWN	J.CATALANELLO	07-DEC-2007
± ± ±	CHECKED	R.SCHMITT	12-DEC-2007
1. BREAK ALL SHARP EDGES MAX.	APPROVED	R.SCHMITT	12-DEC-2007
2. DO NOT SCALE DRAWING. 3. DIMENSIONS BASED UPON ASME Y14.5M-1994 4. MAX. ALL MACH. SURFACES	USED ON		
5. DRAWING UNITS: U.S. INCH	MATERIAL		

FERMI NATIONAL ACCELERATOR LABORATORY
UNITED STATES DEPARTMENT OF ENERGY

FLARE UTILITIES
GAS PIPING & INSTRUMENT DIAGRAM
LIQUID ARGON PURITY DEMONSTRAT'N

SCALE	DRAWING NUMBER	SHEET	REV
NONE	3942.510-ME-444897	3 OF 4	M

CREATED WITH : Ideas12NXSeries | GROUP: PPD/MECHANICAL DEPARTMENT

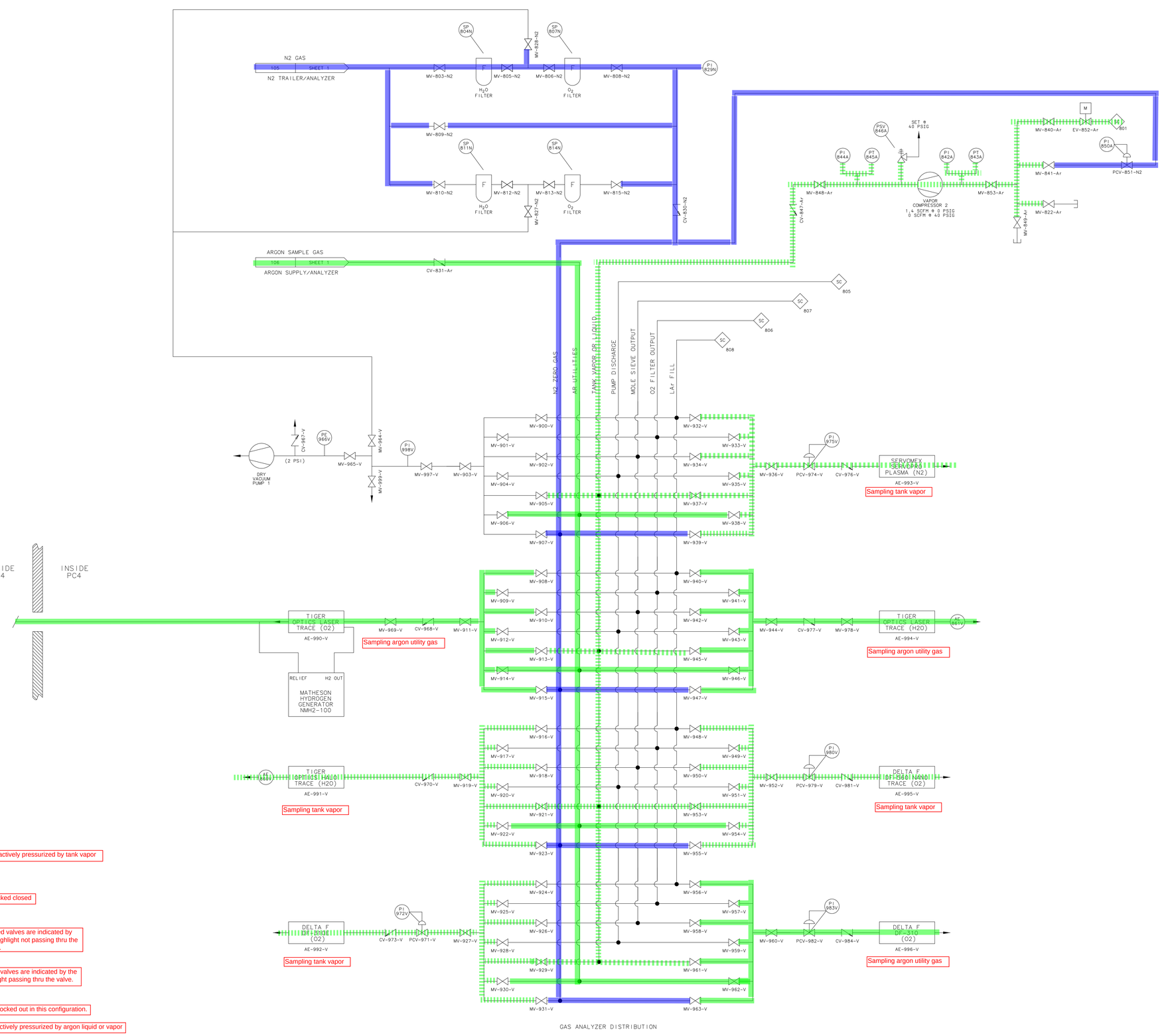

Piping actively pressurized by tank vapor

Valve locked closed

MV-237-Ar — Closed valves are indicated by the highlight not passing thru the valve.

MV-238-Ar — Open valves are indicated by the highlight passing thru the valve.

Valves locked out in this configuration.

Piping actively pressurized by argon liquid or vapor

Piping actively pressurized by nitrogen liquid or vapor

Piping actively pressurized by Hydrogen/Argon gas

Piping evacuated

Oxygen filter regeneration procedure schematic (with liquid argon in tank)

UNLESS OTHERWISE SPECIFIED	ORIGINATOR	R.SCHMITT	26-JUN-2007
	DRAWN	J.CATALANELLO	07-DEC-2007
± ± ±	CHECKED	R.SCHMITT	12-DEC-2007
1. BREAK ALL SHARP EDGES MAX.	APPROVED	R.SCHMITT	12-DEC-2007
2. DO NOT SCALE DRAWING. 3. DIMENSIONS BASED UPON ASME Y14.5M-1994 4. MAX. ALL MACH. SURFACES	USED ON		
5. DRAWING UNITS: U.S.INCH	MATERIAL		

FERMI NATIONAL ACCELERATOR LABORATORY
UNITED STATES DEPARTMENT OF ENERGY

FLARE UTILITIES
GAS PIPING & INSTRUMENT DIAGRAM
LIQUID ARGON PURITY DEMONSTRAT'N

SCALE	DRAWING NUMBER	SHEET	REV
NONE	3942.510-ME-444897	4 OF 4	M

CREATED WITH : Ideas12NXSeries | GROUP: PPD/MECHANICAL DEPARTMENT

REV	DESCRIPTION	DRAWN	DATE
M	MISC. REVISIONS MADE.	J.CATALANELLO	22-MAY-2012
L	MISC. REVISIONS MADE.	J.CATALANELLO	11-JUL-2011
		T.TOPE	01-MAR-2012
K	MISC. REVISIONS MADE.	J.CATALANELLO	04-MAR-2011
		T.TOPE	22-JUN-2011
J	MISC. REVISIONS MADE.	J.CATALANELLO	23-FEB-2011
		T.TOPE	28-FEB-2011
H	MISC. REVISIONS MADE.	J.CATALANELLO	10-JAN-2011
		T.TOPE	03-FEB-2011
G	MISC. REVISIONS MADE.	J.CATALANELLO	10-JAN-2011
		T.TOPE	12-JAN-2012
F	MISC. REVISIONS MADE.	J.CATALANELLO	26-FEB-2010
		M.ADAMOWSKI	26-FEB-2010
A	ADDED TAG NUMBERS TO VALVE TYPES	V. MAJDANSKI	25FEB08
		R. SCHMITT	26FEB08
B	MOVE CONDENSOR OUTSIDE TANK	J.CATALANELLO	07-DEC-2008
		R.SCHMITT	10-DEC-2008
C	MISC. REVISIONS MADE.	J.CATALANELLO	23-DEC-2008
		R.SCHMITT	06-JAN-2009
D	MISC. REVISIONS MADE.	J.CATALANELLO	17-NOV-2009
		T.TOPE	14-DEC-2009
E	MISC. REVISIONS MADE.	J.CATALANELLO	17-NOV-2009
		T.TOPE	15-JAN-2010

LN2 TRAILER #22
4000 GAL MAX
50 PSIG MAX
30-40 PSIG OPERATING

FOR TRAILER DETAILS SEE LN2 TANKER TRAILER FLOW SCHEMATIC DWG #1650-MD-167714, REV "D".

OUTSIDE PC4 | INSIDE PC4

LN2 VAPORIZER 2000 SCFH

N2 LIQUID → 100 SHEET 2 → N2 TRAILER/LAPD TANK

N2 GAS → 110 SHEET 2 → N2 TRAILER/N2 PURGES

N2 GAS → 105 SHEET 4 → N2 TRAILER/ANALYZERS

N2, AR, OR AR/H2 GAS → 101 SHEET 3 → FILTER GAS SUPPLY/LAPD FILTERS

AR/H2 GAS → 109 SHEET 3 → FILTER GAS SUPPLY/LAPD FILTERS

N2, AR, OR AR/H2 GAS → 108 SHEET 3 → FILTER GAS SUPPLY/LAPD FILTERS

97.5% Ar/2.5% H2 REGENERATION GAS 40,000 SCF

CAPILLARY TUBING

INSIDE THE GAS SHED LOCATED OUTSIDE OF PC4

ARGON SOURCE #1 (H.P. LAr 180 L)

ARGON SOURCE #2

ARGON SOURCE #3

LOW PRESSURE Ar PURGES

ARGON PURGE GAS → 103 SHEET 2 → ARGON SUPPLY/LAPD TANK

ARGON RECIRCULATION MAKEUP GAS → 104 SHEET 3 → ARGON SUPPLY/LAPD FILTERS

ARGON SAMPLE GAS → 106 SHEET 4 → ARGON SUPPLY/ANALYZER

TANK PRESSURE MAKEUP GAS → 107 SHEET 2 → ARGON SUPPLY/LAPD TANK

Valve locked closed

MV-237-Ar — Closed valves are indicated by the highlight not passing thru the valve.

MV-238-Ar — Open valves are indicated by the highlight passing thru the valve.

Valves locked out in this configuration.

Piping actively pressurized by argon liquid or vapor

Piping actively pressurized by nitrogen liquid or vapor

Piping actively pressurized by Hydrogen/Argon gas

Piping evacuated

Piping actively pressurized by breathable air

NOTES

1. VALVE TO REMAIN LOCKED CLOSED DURING NORMAL LAPD CRYOGENIC OPERATIONS. VALVE MAY ONLY BE UNLOCKED AND OPENED BY A PPD/MD/F&T ENGINEER FOLLOWING A RELEVANT PROCEDURE.
2. VALVE TO REMAIN LOCKED CLOSED DURING LAPD CRYOGENIC OPERATIONS.

Water filter regeneration procedure schematic (with liquid argon in tank)

UNLESS OTHERWISE SPECIFIED	ORIGINATOR	R.SCHMITT	26-JUN-2007
	DRAWN	J.CATALANELLO	07-DEC-2007
± ± ±	CHECKED	R.SCHMITT	12-DEC-2007
1. BREAK ALL SHARP EDGES MAX.	APPROVED	R.SCHMITT	12-DEC-2007
2. DO NOT SCALE DRAWING. 3. DIMENSIONS BASED UPON ASME Y14.5M-1994 4. MAX. ALL MACH. SURFACES	USED ON		
5. DRAWING UNITS: U.S. INCH	MATERIAL		

FERMI NATIONAL ACCELERATOR LABORATORY
UNITED STATES DEPARTMENT OF ENERGY

FLARE UTILITIES
GAS PIPING & INSTRUMENT DIAGRAM
LIQUID ARGON PURITY DEMONSTRAT'N

SCALE	DRAWING NUMBER	SHEET	REV
NONE	3942.510-ME-444897	1 OF 4	M

CREATED WITH : Ideas12NXSeries | GROUP: PPD/MECHANICAL DEPARTMENT

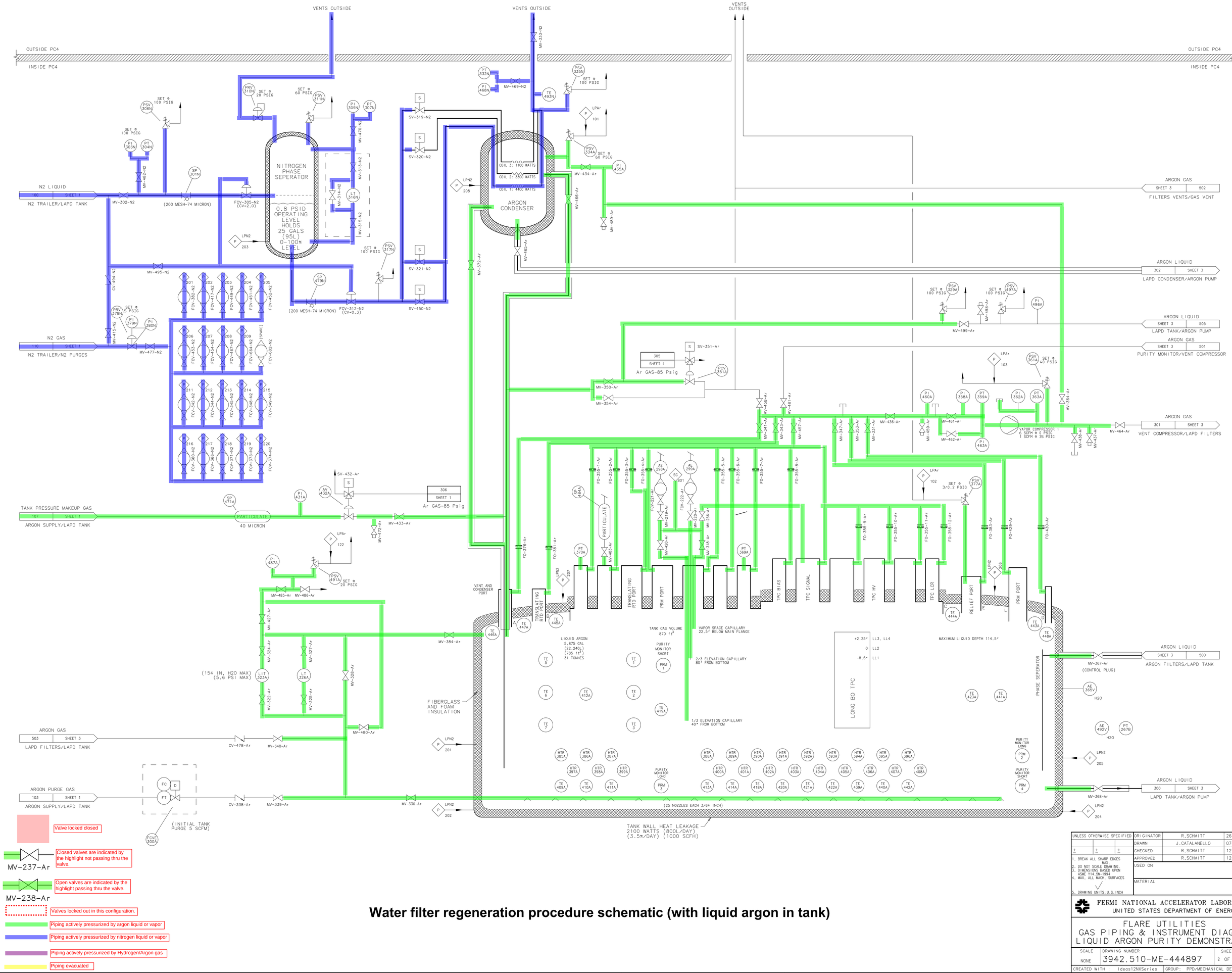

Water filter regeneration procedure schematic (with liquid argon in tank)

UNLESS OTHERWISE SPECIFIED	ORIGINATOR	R.SCHMITT	26-JUN-2007
	DRAWN	J.CATALANELLO	07-DEC-2007
± ± ±	CHECKED	R.SCHMITT	12-DEC-2007
1. BREAK ALL SHARP EDGES MAX.	APPROVED	R.SCHMITT	12-DEC-2007
2. DO NOT SCALE DRAWING. 3. DIMENSIONS BASED UPON ASME Y14.5M-1994 4. MAX. ALL MACH. SURFACES	USED ON		
5. DRAWING UNITS: U.S. INCH	MATERIAL		

FERMI NATIONAL ACCELERATOR LABORATORY
UNITED STATES DEPARTMENT OF ENERGY

FLARE UTILITIES
GAS PIPING & INSTRUMENT DIAGRAM
LIQUID ARGON PURITY DEMONSTRAT'N

SCALE	DRAWING NUMBER	SHEET	REV
NONE	3942.510-ME-444897	2 OF 4	M

CREATED WITH : Ideas12NXSeries | GROUP: PPD/MECHANICAL DEPARTMENT

version 11.13.12 page Y4

Water filter regeneration procedure schematic (with liquid argon in tank)

NOTES

1. VALVE TO REMAIN LOCKED CLOSED DURING NORMAL LAPD CRYOGENIC OPERATIONS. VALVE MAY ONLY BE UNLOCKED AND OPENED BY A PPD/MD/F&T ENGINEER FOLLOWING A RELEVANT PROCEDURE.
2. VALVE TO REMAIN LOCKED CLOSED DURING LAPD CRYOGENIC OPERATIONS.

Closed valves are indicated by the highlight not passing thru the valve. MV-237-Ar

Open valves are indicated by the highlight passing thru the valve. MV-238-Ar

Valves locked out in this configuration.

Piping actively pressurized by argon liquid or vapor

Piping actively pressurized by nitrogen liquid or vapor

Piping actively pressurized by Hydrogen/Argon gas

Piping evacuated

Valve locked closed

UNLESS OTHERWISE SPECIFIED			ORIGINATOR	R.SCHMITT	26-JUN-2007
			DRAWN	J.CATALANELLO	07-DEC-2007
±	±	±	CHECKED	R.SCHMITT	12-DEC-2007
1. BREAK ALL SHARP EDGES MAX.			APPROVED	R.SCHMITT	12-DEC-2007
2. DO NOT SCALE DRAWING.			USED ON		
3. DIMENSIONS BASED UPON ASME Y14.5M-1994			MATERIAL		
4. MAX. ALL MACH. SURFACES					
5. DRAWING UNITS: U.S. INCH					

FERMI NATIONAL ACCELERATOR LABORATORY
UNITED STATES DEPARTMENT OF ENERGY

FLARE UTILITIES
GAS PIPING & INSTRUMENT DIAGRAM
LIQUID ARGON PURITY DEMONSTRAT'N

SCALE	DRAWING NUMBER	SHEET	REV
NONE	3942.510-ME-444897	3 OF 4	M

CREATED WITH : Ideas12NXSeries | GROUP: PPD/MECHANICAL DEPARTMENT

version 11.13.12 page 75

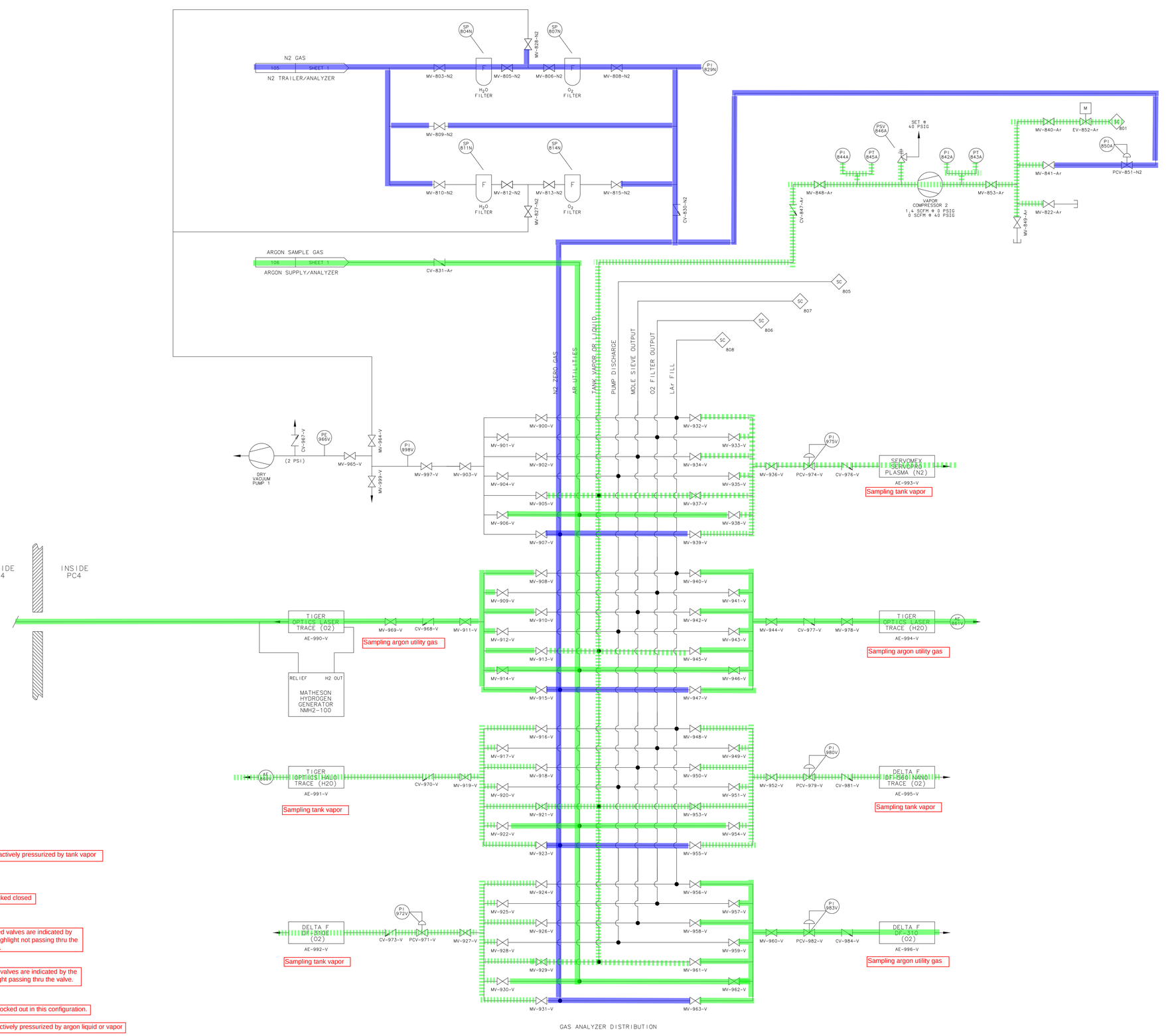

Piping actively pressurized by tank vapor

Valve locked closed

MV-237-Ar — Closed valves are indicated by the highlight not passing thru the valve.

MV-238-Ar — Open valves are indicated by the highlight passing thru the valve.

Valves locked out in this configuration.

Piping actively pressurized by argon liquid or vapor

Piping actively pressurized by nitrogen liquid or vapor

Piping actively pressurized by Hydrogen/Argon gas

Piping evacuated

Water filter regeneration procedure schematic (with liquid argon in tank)

UNLESS OTHERWISE SPECIFIED	ORIGINATOR	R.SCHMITT	26-JUN-2007
	DRAWN	J.CATALANELLO	07-DEC-2007
± ± ±	CHECKED	R.SCHMITT	12-DEC-2007
1. BREAK ALL SHARP EDGES MAX.	APPROVED	R.SCHMITT	12-DEC-2007
2. DO NOT SCALE DRAWING. 3. DIMENSIONS BASED UPON ASME Y14.5M-1994 4. MAX. ALL MACH. SURFACES	USED ON		
5. DRAWING UNITS: U.S. INCH	MATERIAL		

FERMI NATIONAL ACCELERATOR LABORATORY
UNITED STATES DEPARTMENT OF ENERGY

FLARE UTILITIES
GAS PIPING & INSTRUMENT DIAGRAM
LIQUID ARGON PURITY DEMONSTRAT'N

SCALE	DRAWING NUMBER	SHEET	REV
NONE	3942.510-ME-444897	4 OF 4	M

CREATED WITH : Ideas12NXSeries | GROUP: PPD/MECHANICAL DEPARTMENT