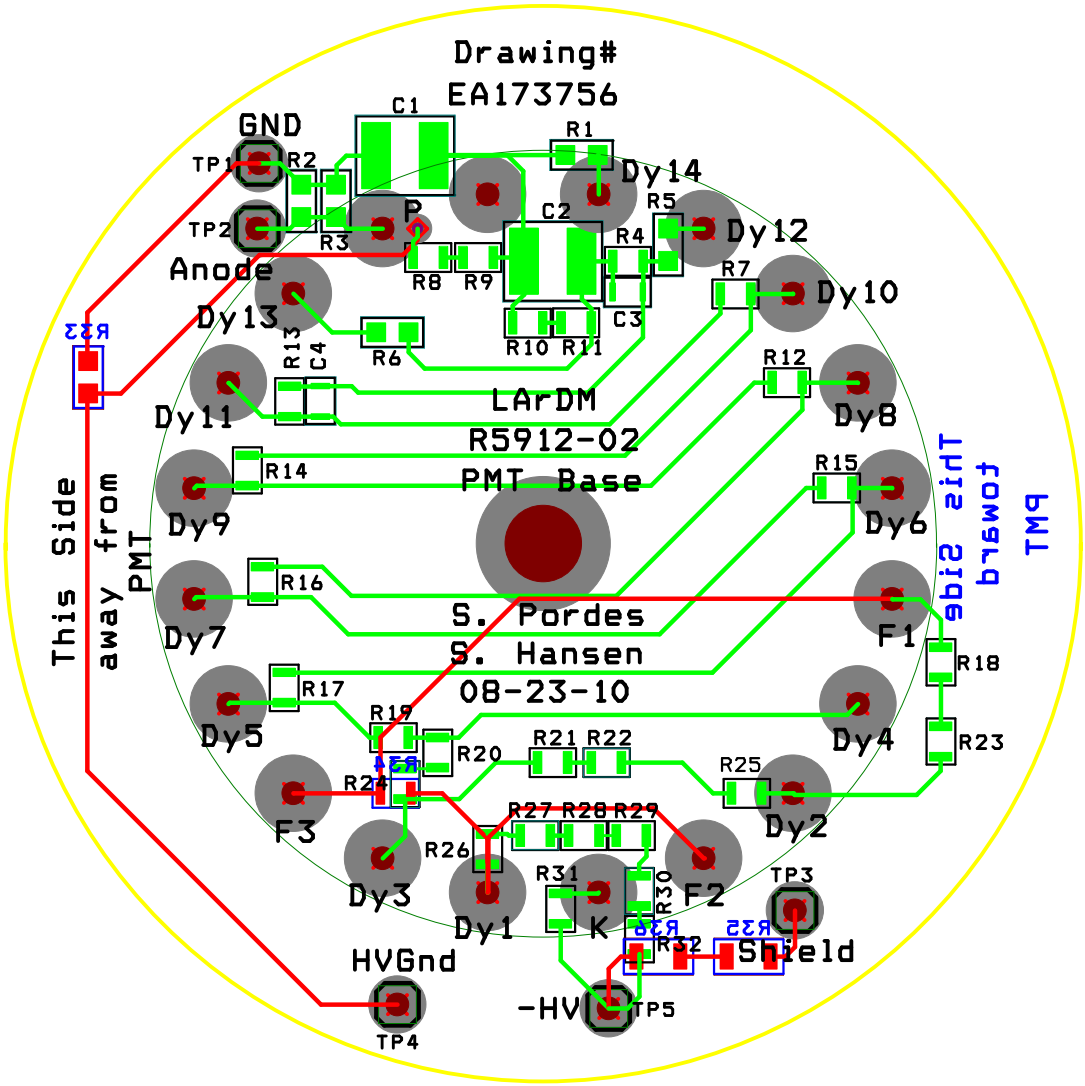


| DRILL CHART | | | | |
|---|---|---|---|---|
| SYM | DIAM | TOL | QTY | NOTE |
| ◇ | 0.028 | | 1 | |
| × | 0.060 | | 25 | |
| + | 0.200 | | 1 | NON-PLATED |
| TOTAL | | | 27 | |