Bo Cold DAQ LArTPC Preamp Power System

General Block Diagram

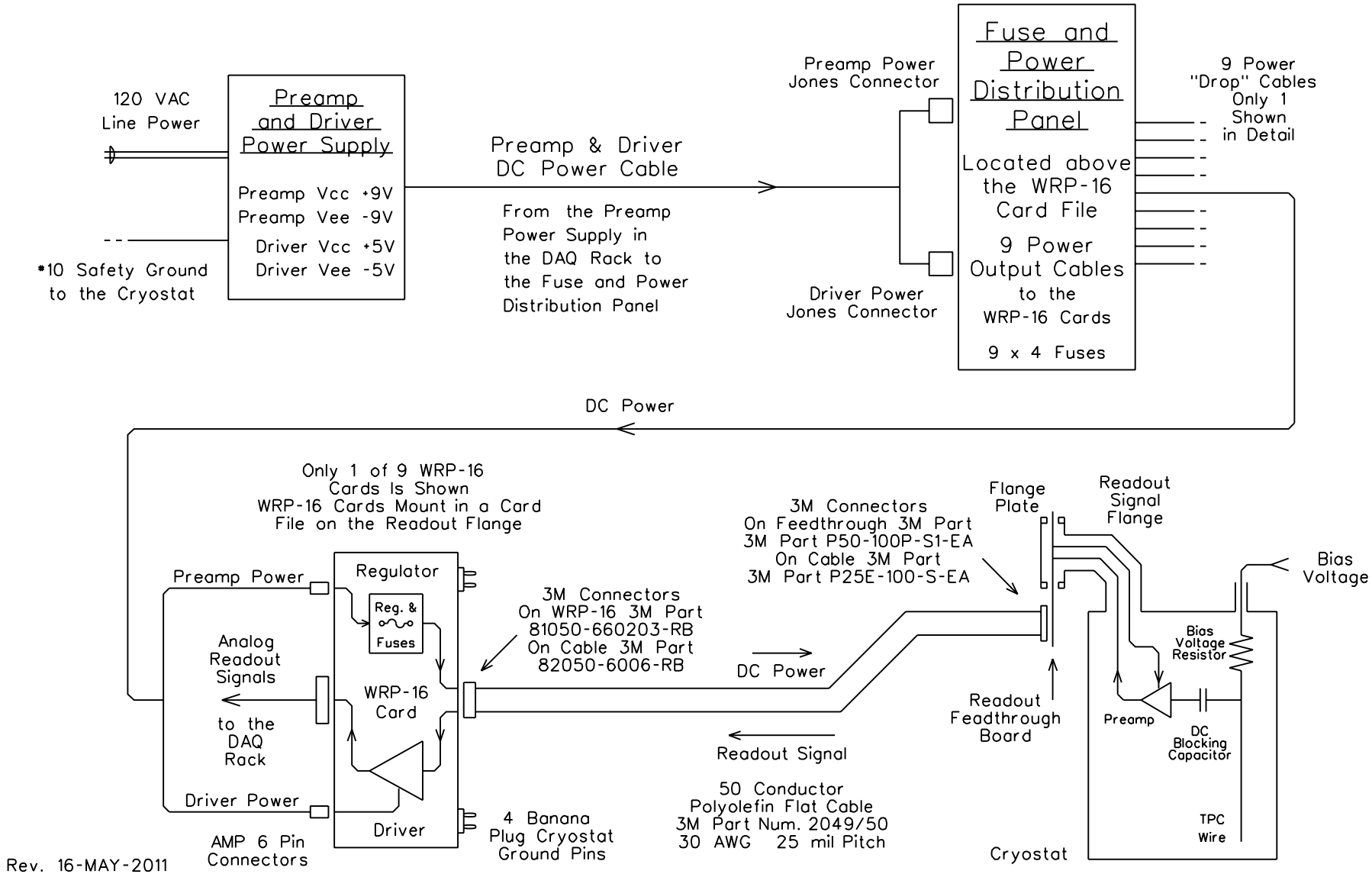

Rev. 16-MAY-2011