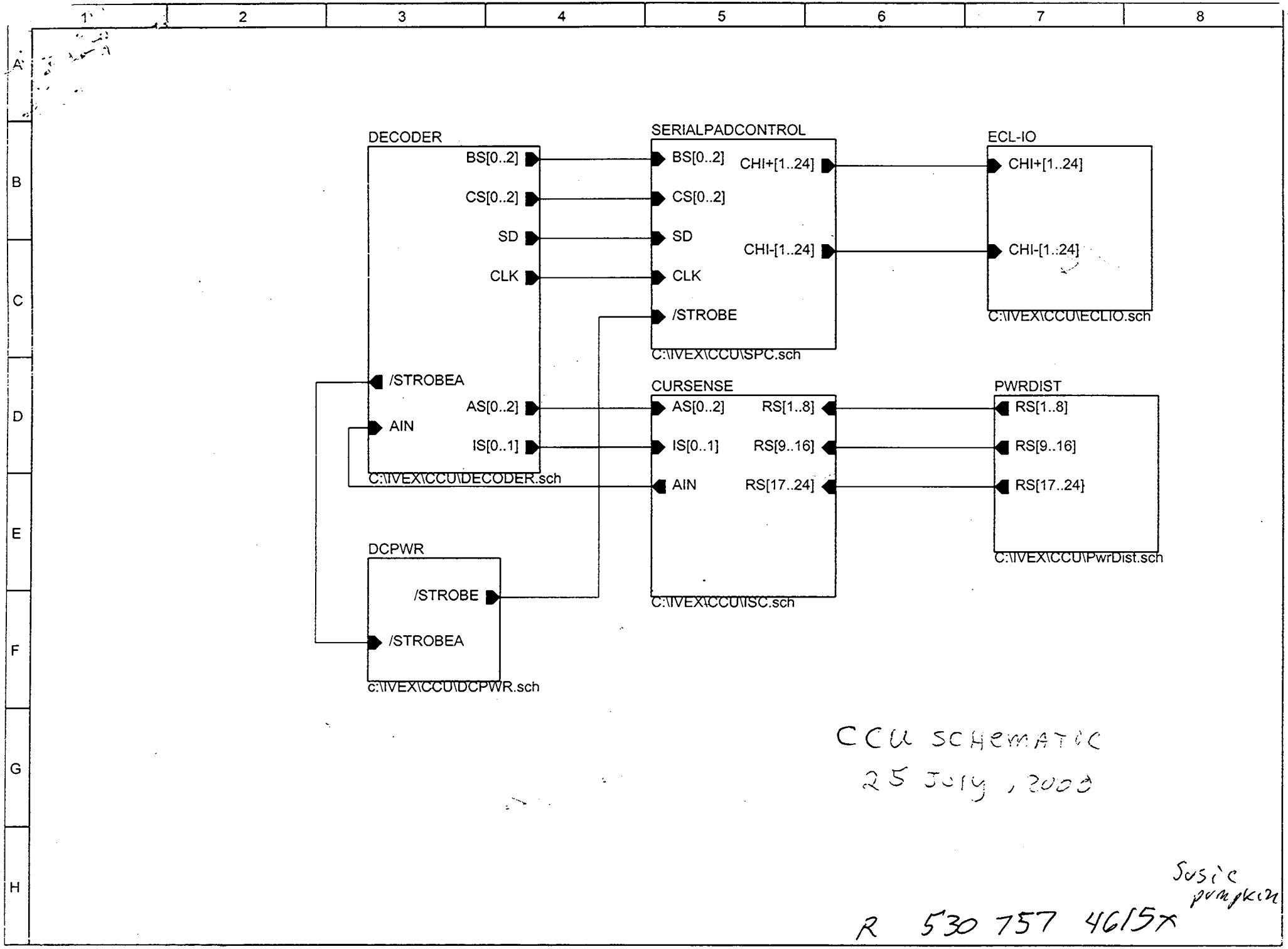

CCU SCHEMATIC
25 July, 2000

Susie pumpkin

R 530 757 4615x

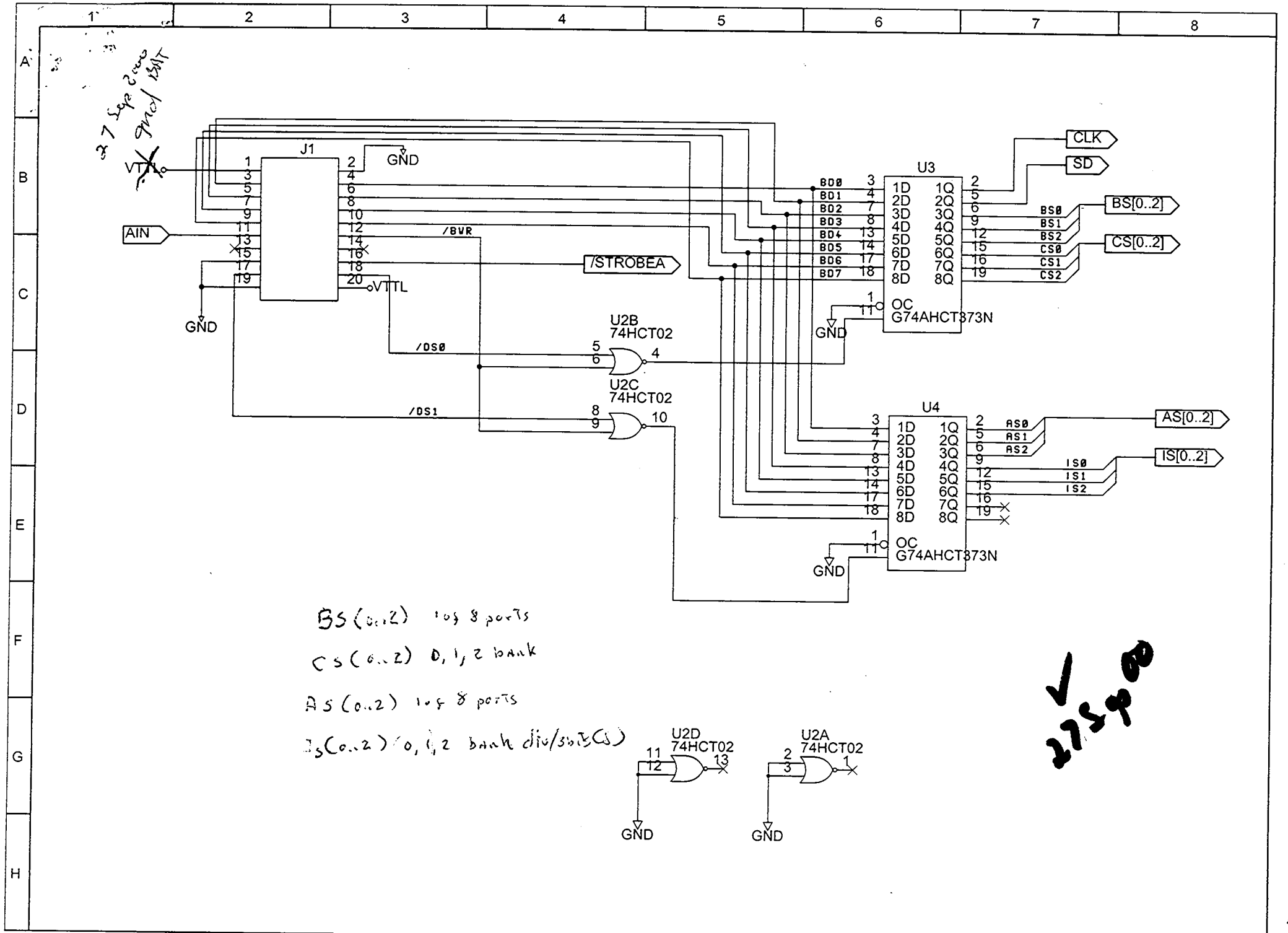
J1
VTTL
GND
AIN
/BVR
/STROBEA
VTTL
GND
U2B
74HCT02
/DS0
U2C
74HCT02
/DS1
U3
BD0
BD1
BD2
BD3
BD4
BD5
BD6
BD7
1D 1Q
2D 2Q
3D 3Q
4D 4Q
5D 5Q
6D 6Q
7D 7Q
8D 8Q
OC
G74AHCT373N
GND
CLK
SD
BS0
BS1
BS2
CS0
CS1
CS2
BS[0..2]
CS[0..2]
U4
AS0
AS1
AS2
IS0
IS1
IS2
AS[0..2]
IS[0..2]
OC
G74AHCT373N
GND
BS(0..2) 1 of 8 ports
CS(0..2) 0, 1, 2 bank
AS(0..2) 1 of 8 ports
IS(0..2) 0, 1, 2 bank dio/sbitCS
U2D
74HCT02
GND
U2A
74HCT02
GND

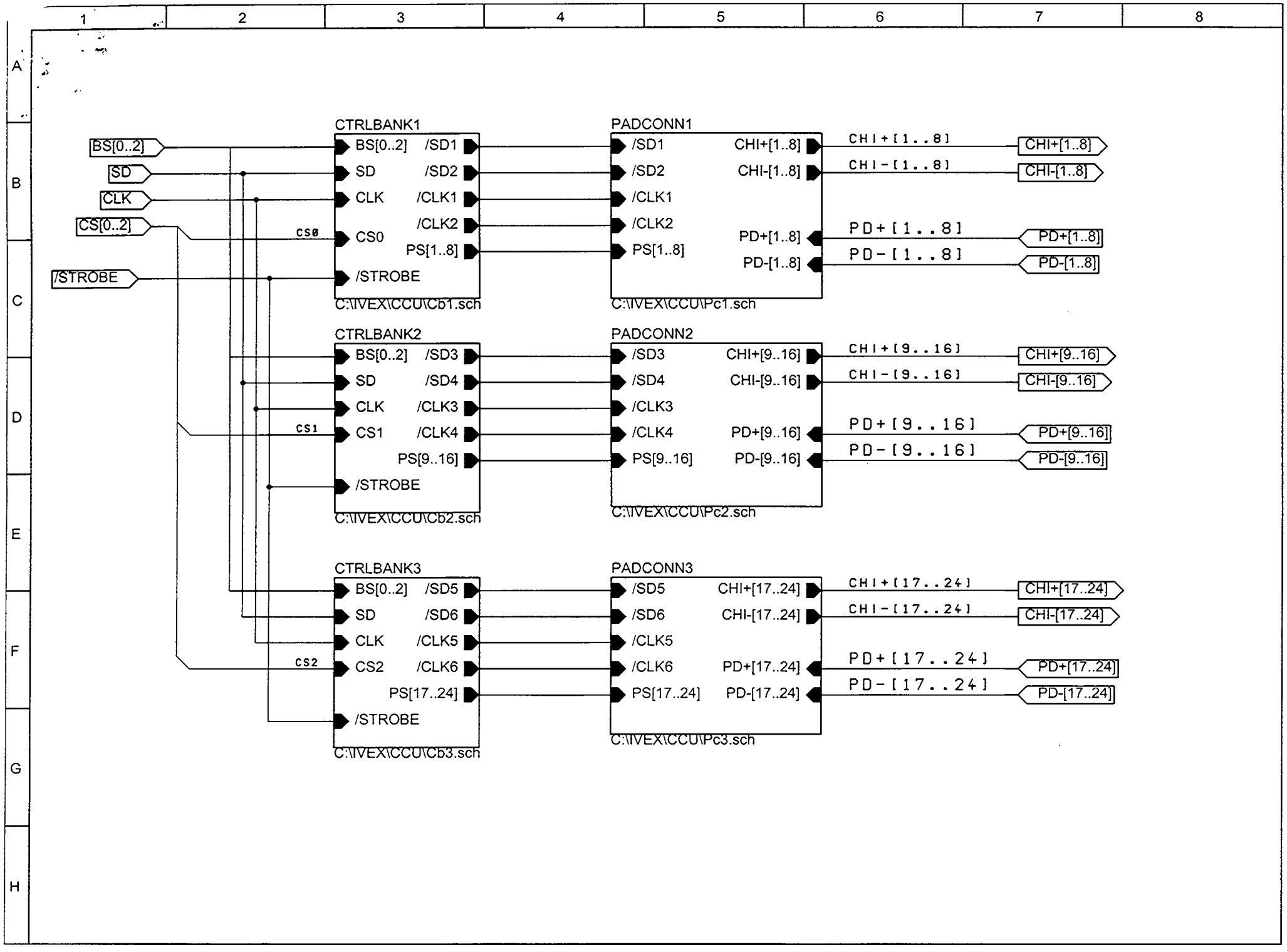
1
2
3
4
5
6
7
8
A
B
C
D
E
F
G
H
BS[0..2]
SD
CLK
CS[0..2]
/STROBE
CTRLBANK1
BS[0..2]
SD
CLK
CS0
/STROBE
/SD1
/SD2
/CLK1
/CLK2
PS[1..8]
C:\IVEX\CCU\Cb1.sch
PADCONN1
/SD1
/SD2
/CLK1
/CLK2
PS[1..8]
CHI+[1..8]
CHI-[1..8]
PD+[1..8]
PD-[1..8]
C:\IVEX\CCU\Pc1.sch
CHI+[1..8]
CHI-[1..8]
PD+[1..8]
PD-[1..8]
CTRLBANK2
BS[0..2]
SD
CLK
CS1
/STROBE
/SD3
/SD4
/CLK3
/CLK4
PS[9..16]
C:\IVEX\CCU\Cb2.sch
PADCONN2
/SD3
/SD4
/CLK3
/CLK4
PS[9..16]
CHI+[9..16]
CHI-[9..16]
PD+[9..16]
PD-[9..16]
C:\IVEX\CCU\Pc2.sch
CHI+[9..16]
CHI-[9..16]
PD+[9..16]
PD-[9..16]
CTRLBANK3
BS[0..2]
SD
CLK
CS2
/STROBE
/SD5
/SD6
/CLK5
/CLK6
PS[17..24]
C:\IVEX\CCU\Cb3.sch
PADCONN3
/SD5
/SD6
/CLK5
/CLK6
PS[17..24]
CHI+[17..24]
CHI-[17..24]
PD+[17..24]
PD-[17..24]
C:\IVEX\CCU\Pc3.sch
CHI+[17..24]
CHI-[17..24]
PD+[17..24]
PD-[17..24]

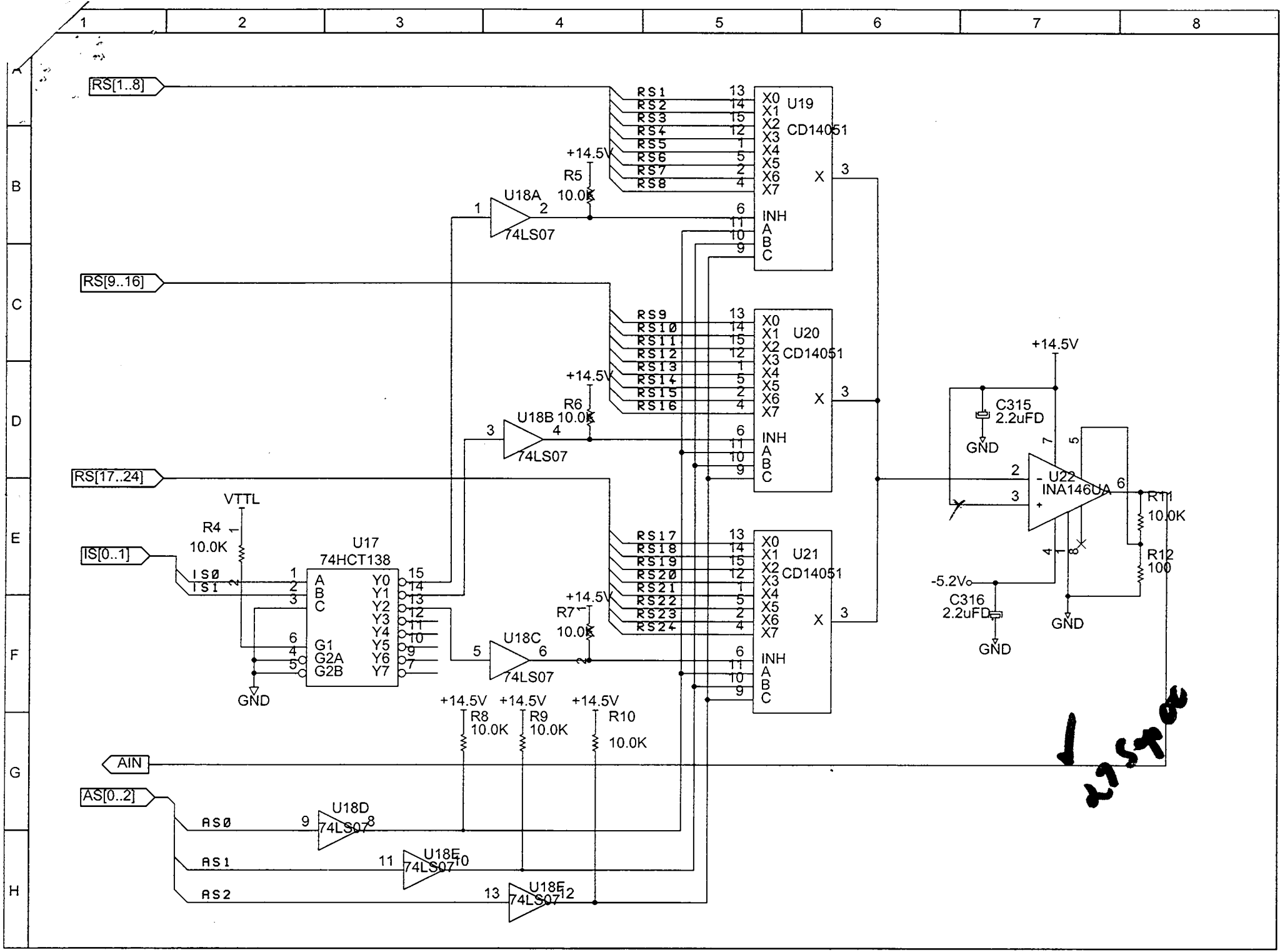
RS[1..8]
RS[9..16]
RS[17..24]
IS[0..1]
AS[0..2]
AIN
U19
CD14051
U20
CD14051
U21
CD14051
U17
74HCT138
U18A
74LS07
U18B
74LS07
U18C
74LS07
U18D
74LS07
U18E
74LS07
U18E
74LS07
U22
INA146UA
R4
10.0K
R5
10.0K
R6
10.0K
R7
10.0K
R8
10.0K
R9
10.0K
R10
10.0K
R11
10.0K
R12
100
C315
2.2uFD
C316
2.2uFD
+14.5V
-5.2V
VTTL
GND

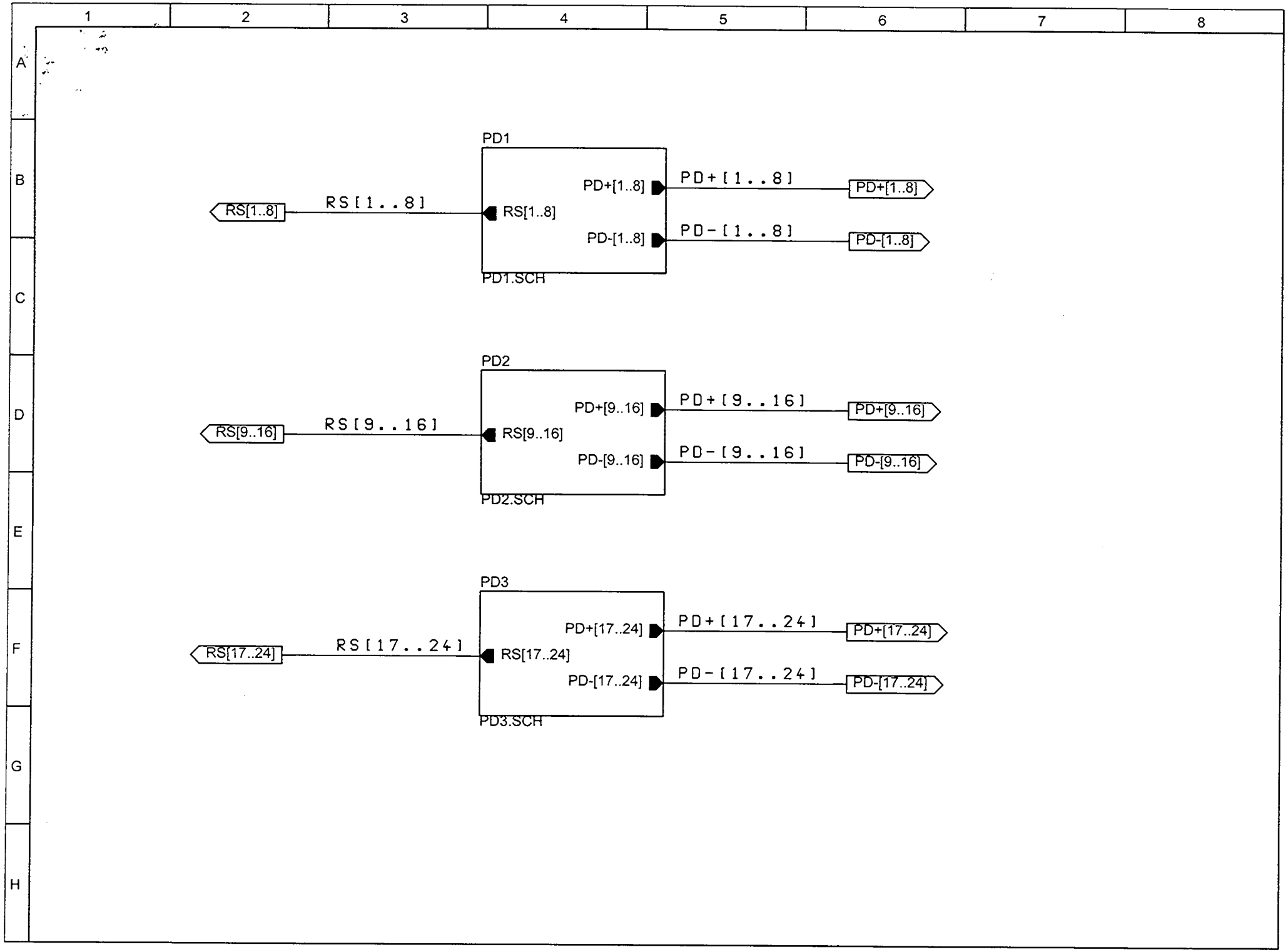
1
2
3
4
5
6
7
8
A
B
C
D
E
F
G
H
PD1
RS[1..8]
RS[1..8]
RS[1..8]
PD+[1..8]
PD-[1..8]
PD+[1..8]
PD-[1..8]
PD1.SCH
PD2
RS[9..16]
RS[9..16]
RS[9..16]
PD+[9..16]
PD-[9..16]
PD+[9..16]
PD-[9..16]
PD2.SCH
PD3
RS[17..24]
RS[17..24]
RS[17..24]
PD+[17..24]
PD-[17..24]
PD+[17..24]
PD-[17..24]
PD3.SCH

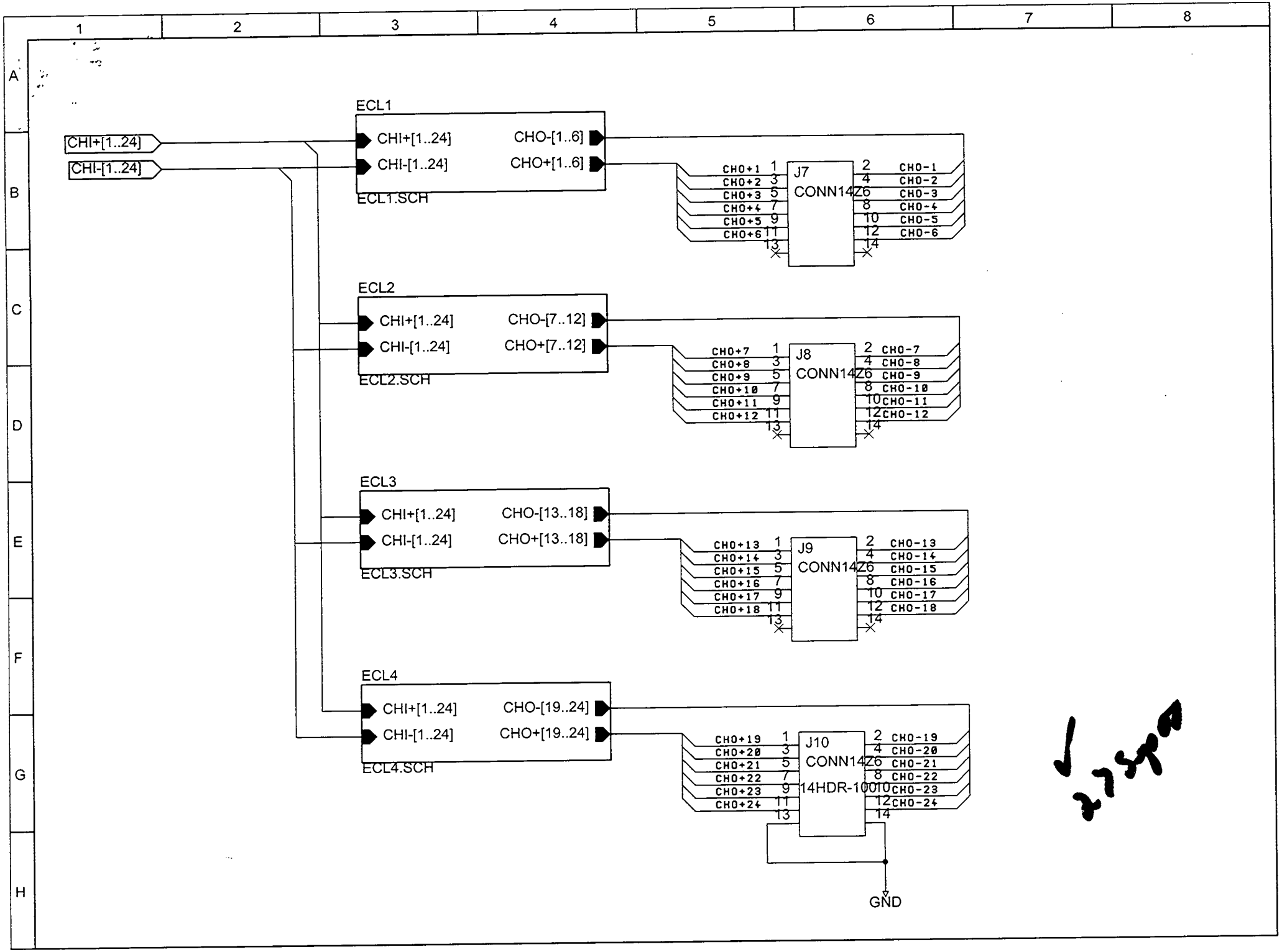
1
2
3
4
5
6
7
8
A
B
C
D
E
F
G
H
CHI+[1..24]
CHI-[1..24]
ECL1
CHI+[1..24]
CHI-[1..24]
CHO-[1..6]
CHO+[1..6]
ECL1.SCH
CHO+1 1
CHO+2 3
CHO+3 5
CHO+4 7
CHO+5 9
CHO+6 11
13
J7
CONN14Z6
2 CHO-1
4 CHO-2
6 CHO-3
8 CHO-4
10 CHO-5
12 CHO-6
14
ECL2
CHI+[1..24]
CHI-[1..24]
CHO-[7..12]
CHO+[7..12]
ECL2.SCH
CHO+7 1
CHO+8 3
CHO+9 5
CHO+10 7
CHO+11 9
CHO+12 11
13
J8
CONN14Z6
2 CHO-7
4 CHO-8
6 CHO-9
8 CHO-10
10 CHO-11
12 CHO-12
14
ECL3
CHI+[1..24]
CHI-[1..24]
CHO-[13..18]
CHO+[13..18]
ECL3.SCH
CHO+13 1
CHO+14 3
CHO+15 5
CHO+16 7
CHO+17 9
CHO+18 11
13
J9
CONN14Z6
2 CHO-13
4 CHO-14
6 CHO-15
8 CHO-16
10 CHO-17
12 CHO-18
14
ECL4
CHI+[1..24]
CHI-[1..24]
CHO-[19..24]
CHO+[19..24]
ECL4.SCH
CHO+19 1
CHO+20 3
CHO+21 5
CHO+22 7
CHO+23 9
CHO+24 11
13
J10
CONN14Z6
14HDR-10010
2 CHO-19
4 CHO-20
6 CHO-21
8 CHO-22
10 CHO-23
12 CHO-24
14
GND

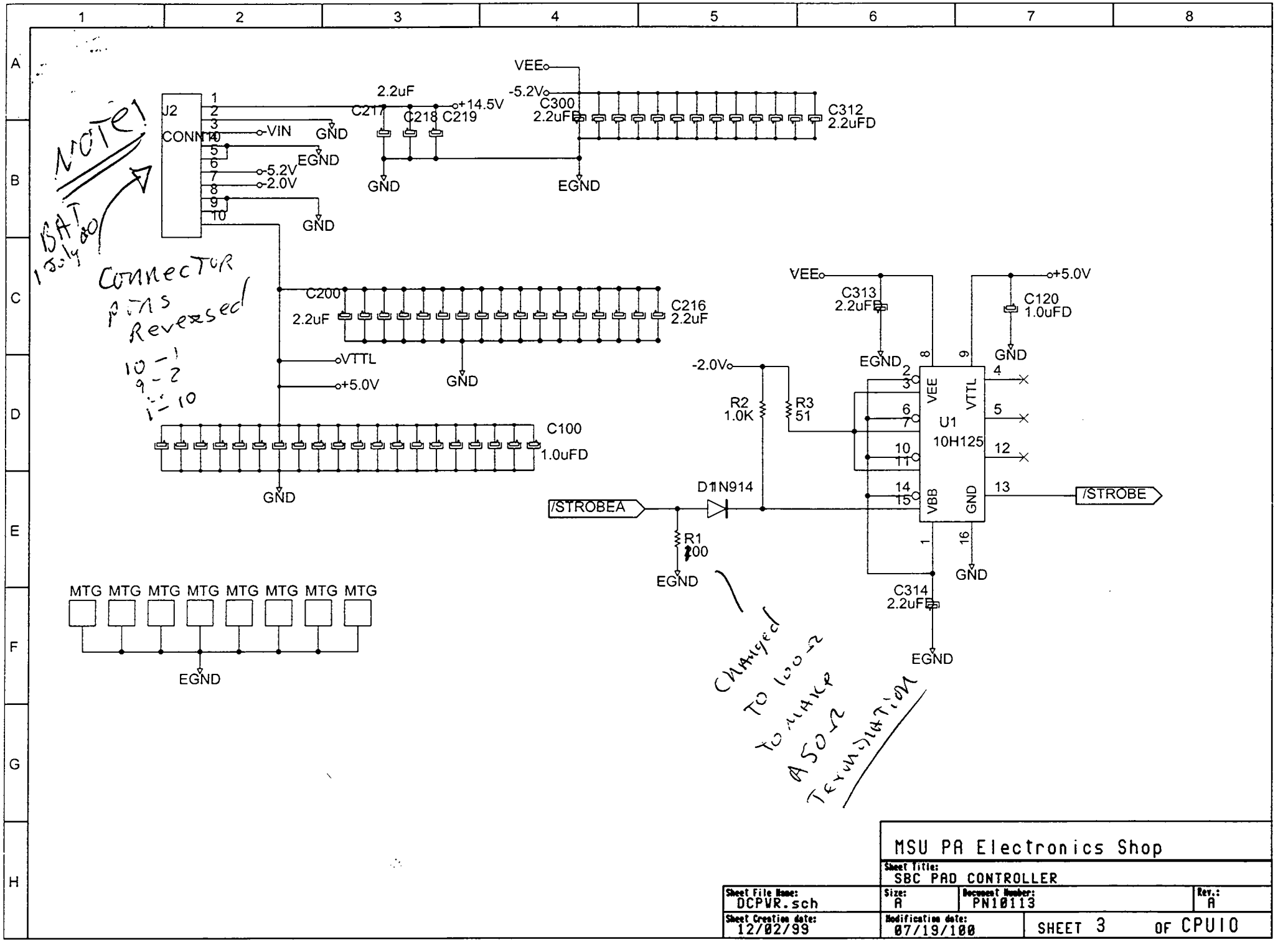

MSU PA Electronics Shop

Sheet Title: SBC PAD CONTROLLER			
Sheet File Name: DCPWR.sch	Size: A	Document Number: PN10113	Rev.: A
Sheet Creation date: 12/02/99	Modification date: 07/19/100	SHEET 3 OF CPUIO	

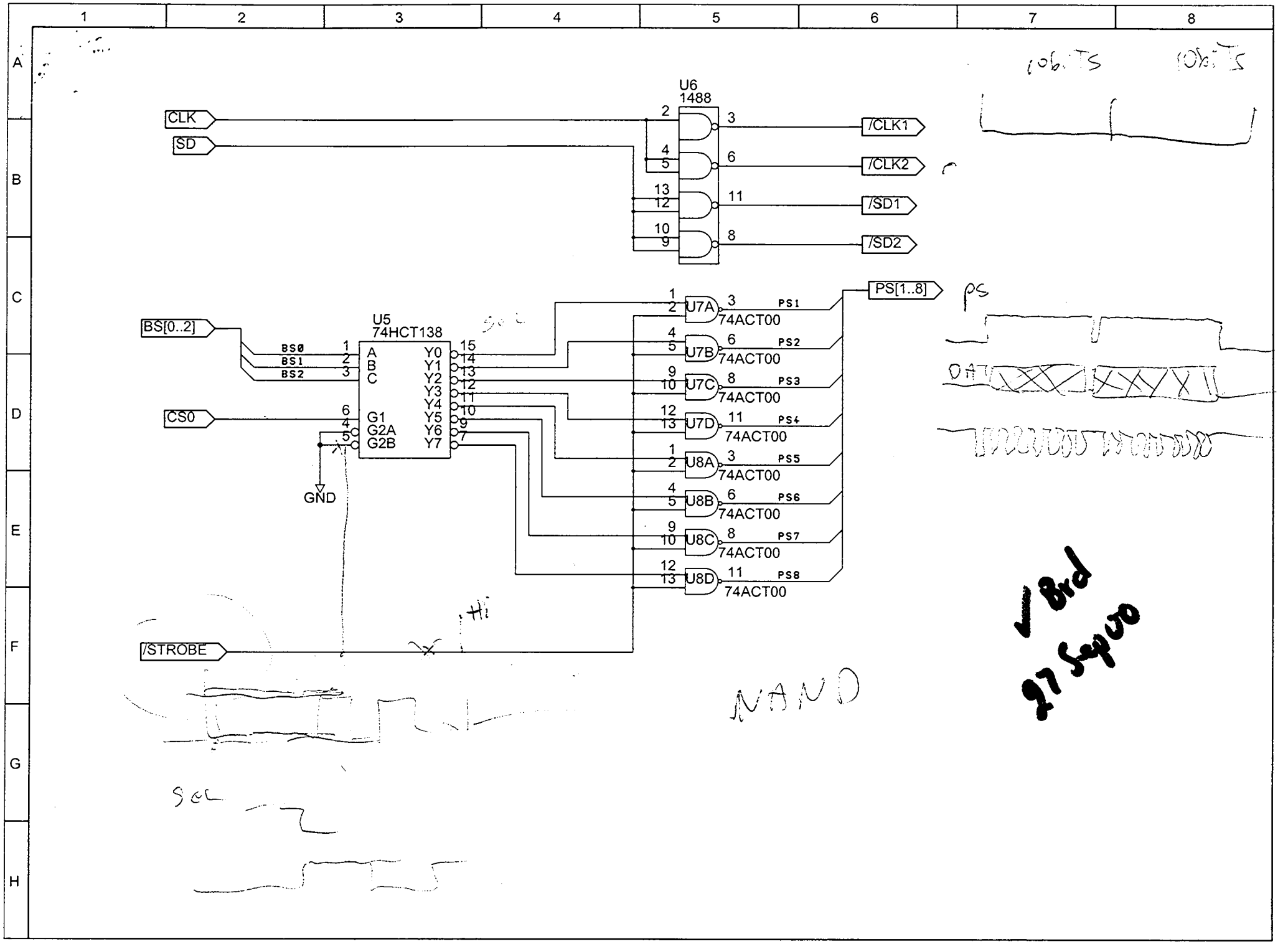
U6
1488
CLK
SD
/CLK1
/CLK2
/SD1
/SD2
U5
74HCT138
BS[0..2]
BS0
BS1
BS2
CS0
GND
A
B
C
G1
G2A
G2B
Y0
Y1
Y2
Y3
Y4
Y5
Y6
Y7
U7A
U7B
U7C
U7D
U8A
U8B
U8C
U8D
74ACT00
PS1
PS2
PS3
PS4
PS5
PS6
PS7
PS8
PS[1..8]
/STROBE
NAND

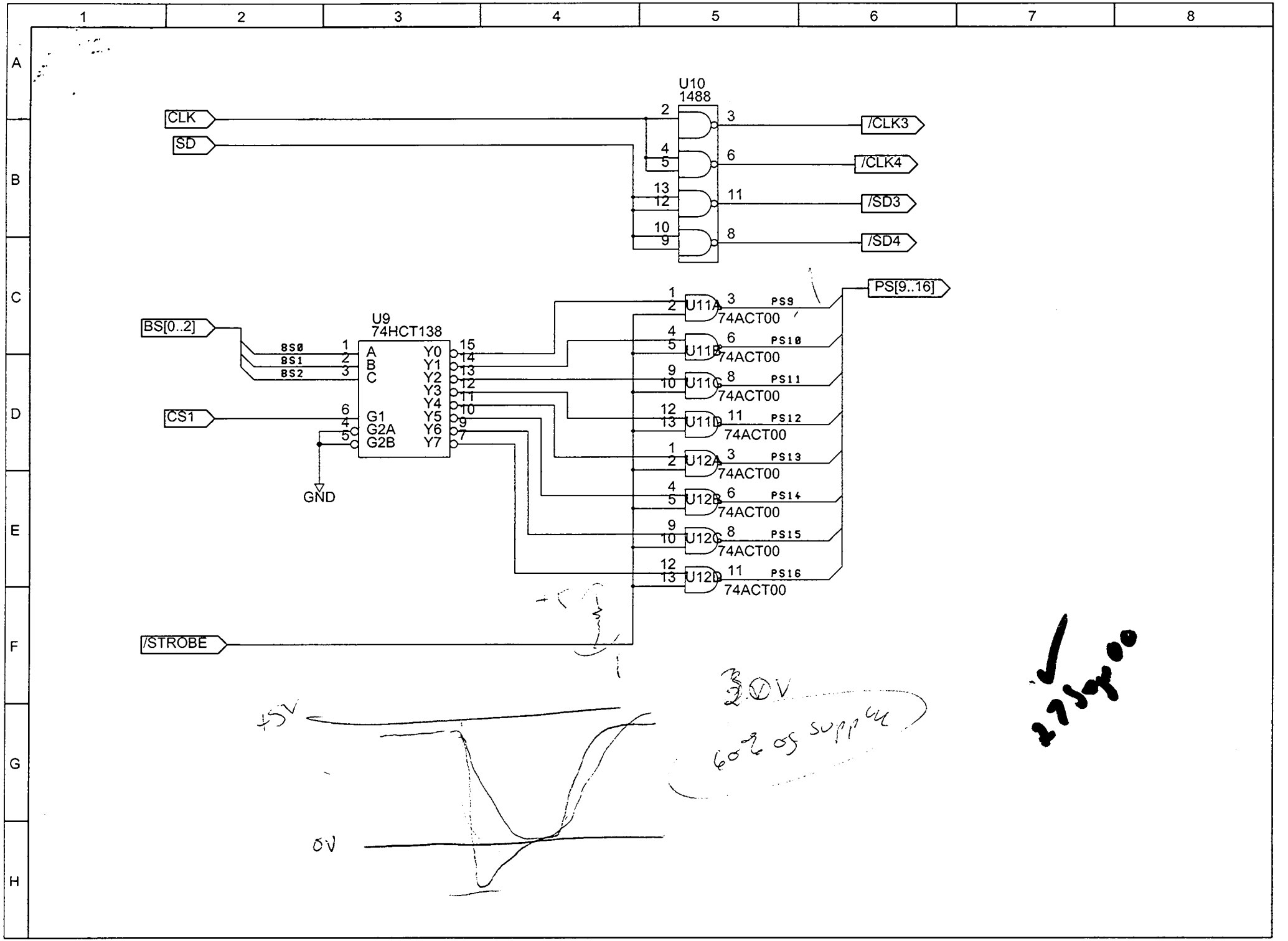
U10
1488
CLK
SD
/CLK3
/CLK4
/SD3
/SD4
U9
74HCT138
BS[0..2]
BS0
BS1
BS2
CS1
GND
A
B
C
G1
G2A
G2B
Y0
Y1
Y2
Y3
Y4
Y5
Y6
Y7
U11A
U11B
U11C
U11D
U12A
U12B
U12C
U12D
74ACT00
PS9
PS10
PS11
PS12
PS13
PS14
PS15
PS16
PS[9..16]
/STROBE
+5V
0V
3.0V
60% of supply

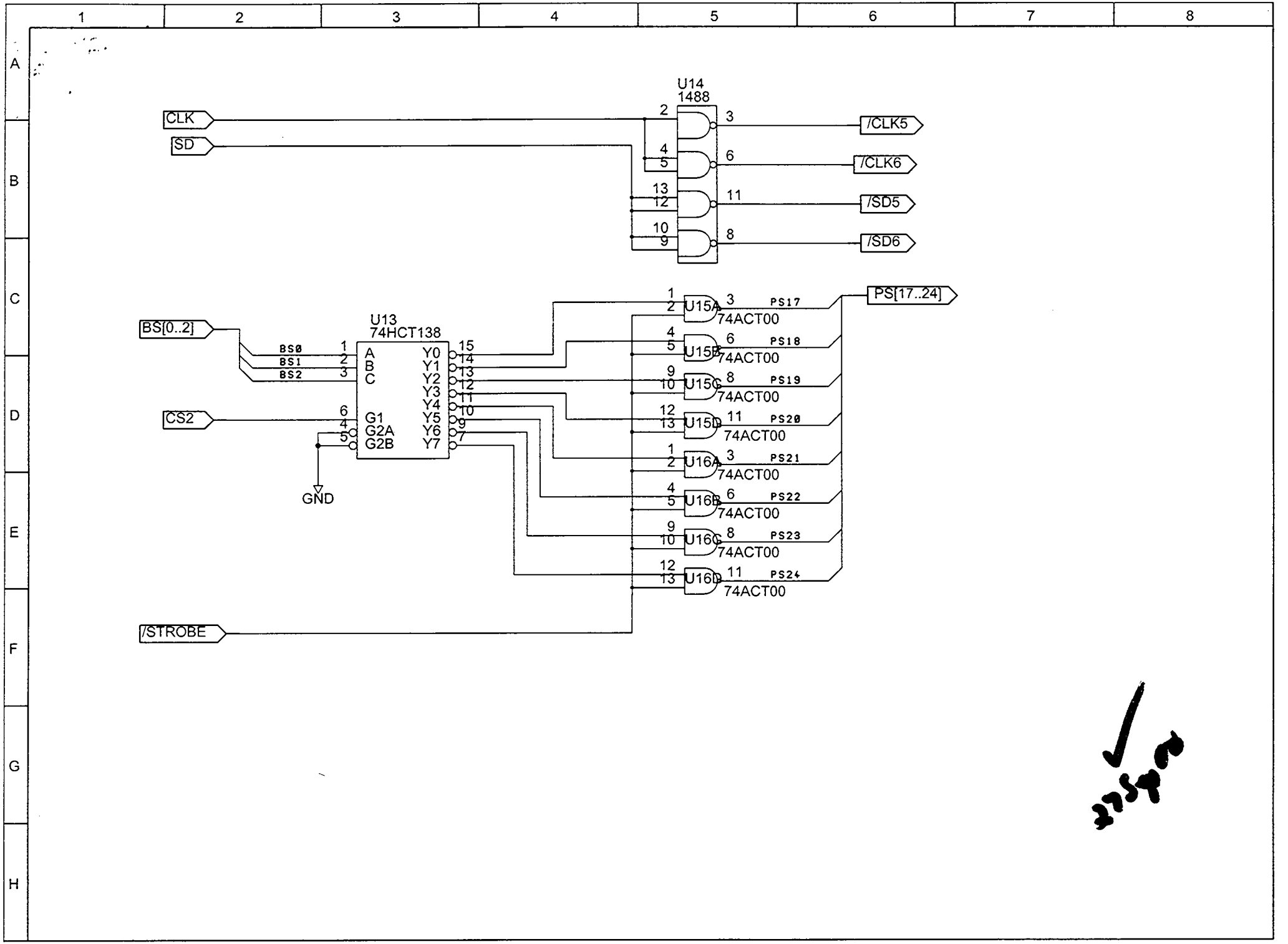
1
2
3
4
5
6
7
8
A
B
C
D
E
F
G
H
U14
1488
CLK
SD
/CLK5
/CLK6
/SD5
/SD6
U13
74HCT138
BS[0..2]
BS0
BS1
BS2
CS2
GND
A
B
C
G1
G2A
G2B
Y0
Y1
Y2
Y3
Y4
Y5
Y6
Y7
U15A
U15B
U15C
U15D
U16A
U16B
U16C
U16D
74ACT00
PS17
PS18
PS19
PS20
PS21
PS22
PS23
PS24
PS[17..24]
/STROBE

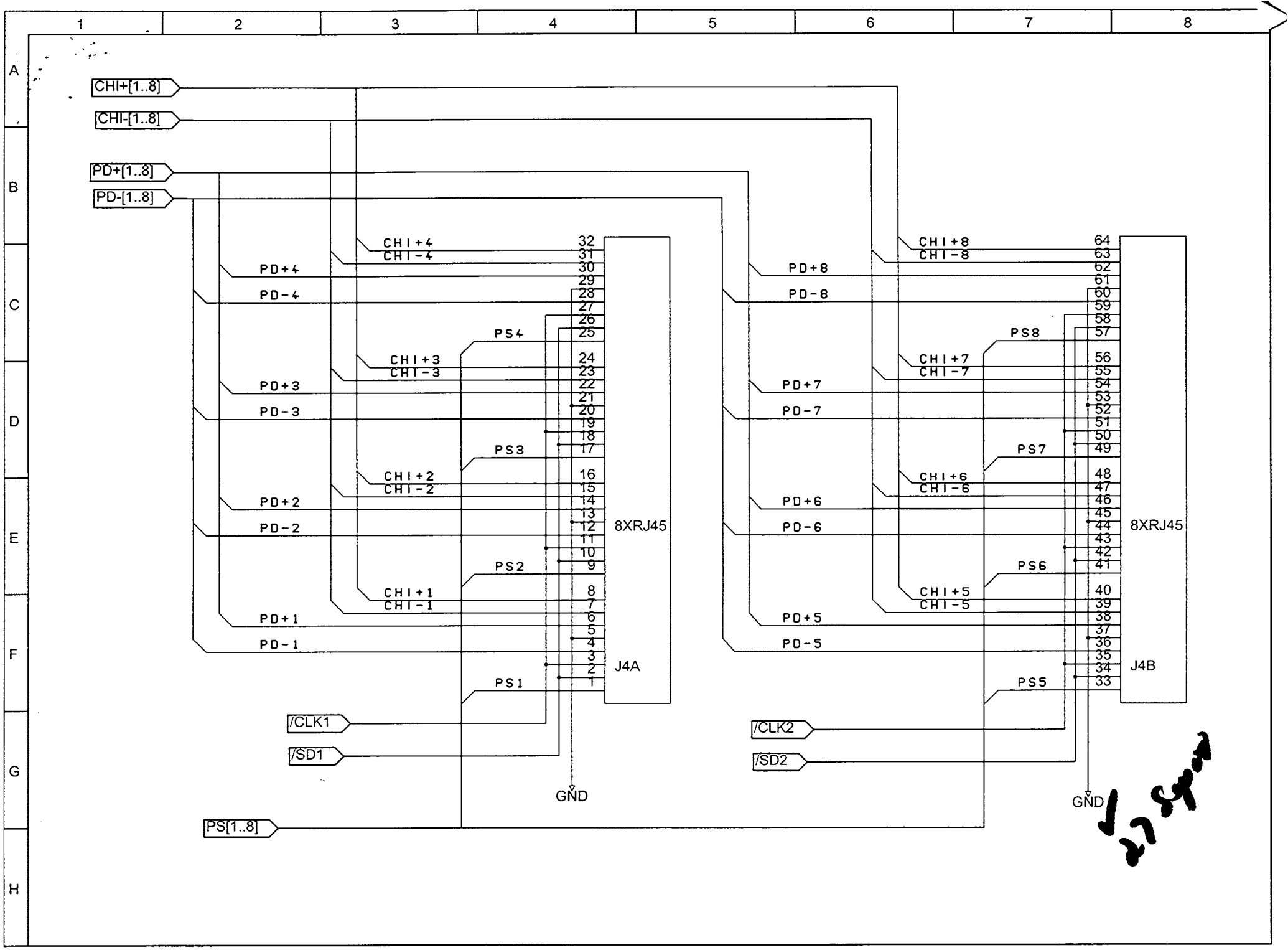
CHI+[1..8]
CHI-[1..8]
PD+[1..8]
PD-[1..8]
PS[1..8]
/CLK1
/SD1
/CLK2
/SD2
GND
GND
8XRJ45
8XRJ45
J4A
J4B
CHI+4
CHI-4
PD+4
PD-4
PS4
CHI+3
CHI-3
PD+3
PD-3
PS3
CHI+2
CHI-2
PD+2
PD-2
PS2
CHI+1
CHI-1
PD+1
PD-1
PS1
CHI+8
CHI-8
PD+8
PD-8
PS8
CHI+7
CHI-7
PD+7
PD-7
PS7
CHI+6
CHI-6
PD+6
PD-6
PS6
CHI+5
CHI-5
PD+5
PD-5
PS5

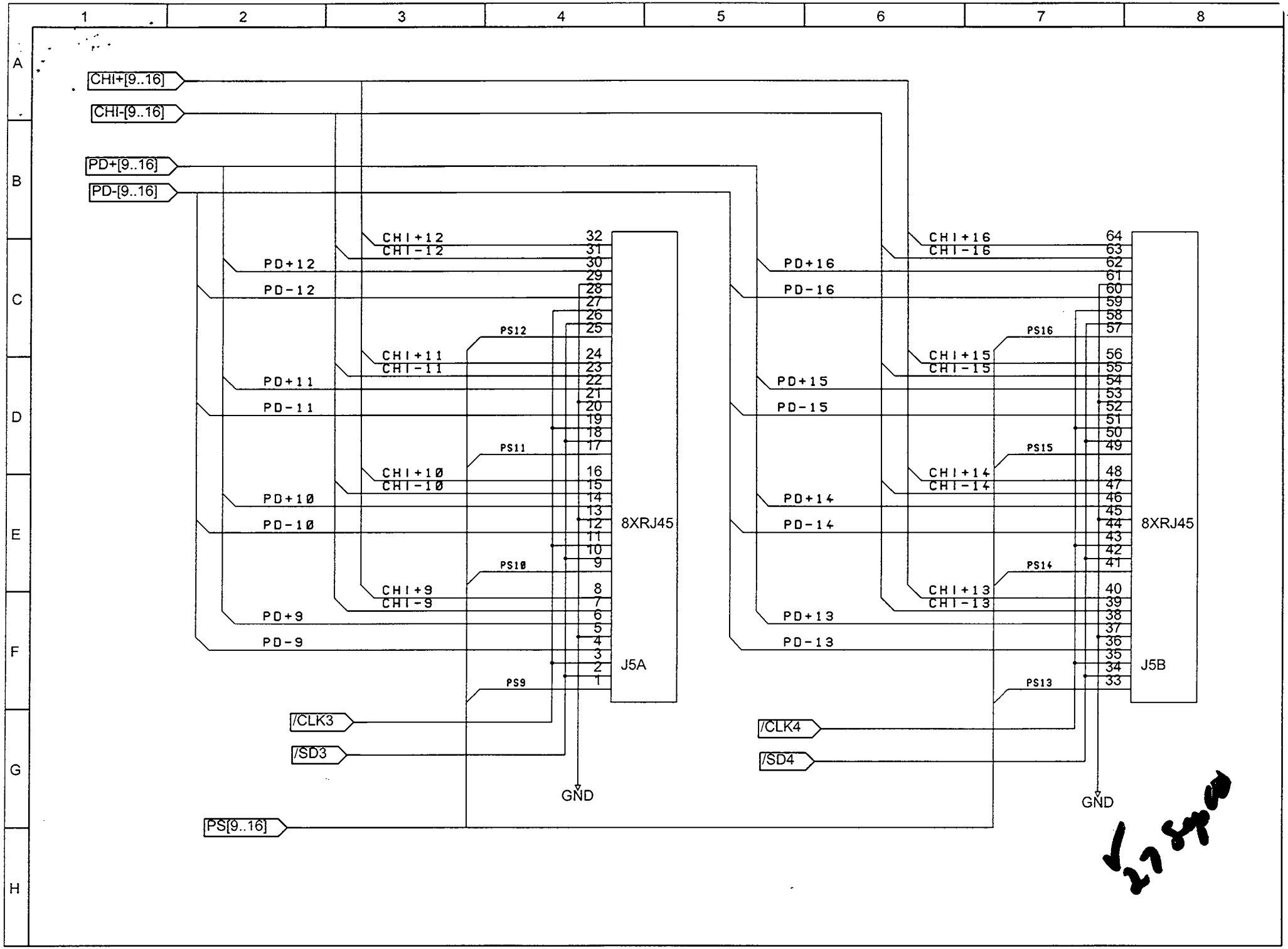
CHI+[9..16]
CHI-[9..16]
PD+[9..16]
PD-[9..16]
PS[9..16]
/CLK3
/SD3
/CLK4
/SD4
GND
GND
8XRJ45
J5A
8XRJ45
J5B
CHI+12
CHI-12
PD+12
PD-12
PS12
CHI+11
CHI-11
PD+11
PD-11
PS11
CHI+10
CHI-10
PD+10
PD-10
PS10
CHI+9
CHI-9
PD+9
PD-9
PS9
CHI+16
CHI-16
PD+16
PD-16
PS16
CHI+15
CHI-15
PD+15
PD-15
PS15
CHI+14
CHI-14
PD+14
PD-14
PS14
CHI+13
CHI-13
PD+13
PD-13
PS13

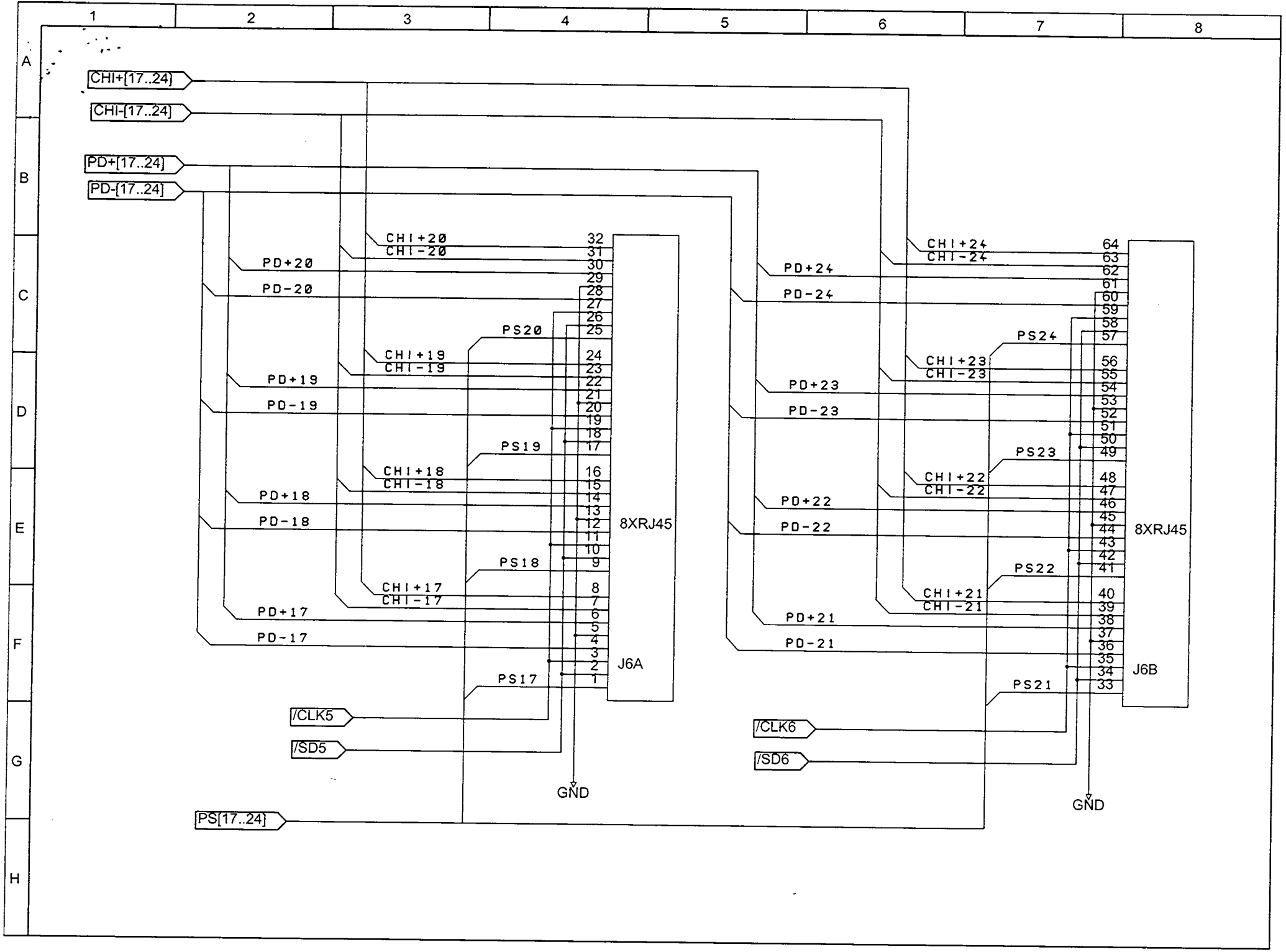
CHI+[17..24]
CHI-[17..24]
PD+[17..24]
PD-[17..24]
PS[17..24]
CHI+20
CHI-20
PD+20
PD-20
PS20
CHI+19
CHI-19
PD+19
PD-19
PS19
CHI+18
CHI-18
PD+18
PD-18
PS18
CHI+17
CHI-17
PD+17
PD-17
PS17
/CLK5
/SD5
GND
8XRJ45
J6A
CHI+24
CHI-24
PD+24
PD-24
PS24
CHI+23
CHI-23
PD+23
PD-23
PS23
CHI+22
CHI-22
PD+22
PD-22
PS22
CHI+21
CHI-21
PD+21
PD-21
PS21
/CLK6
/SD6
GND
8XRJ45
J6B

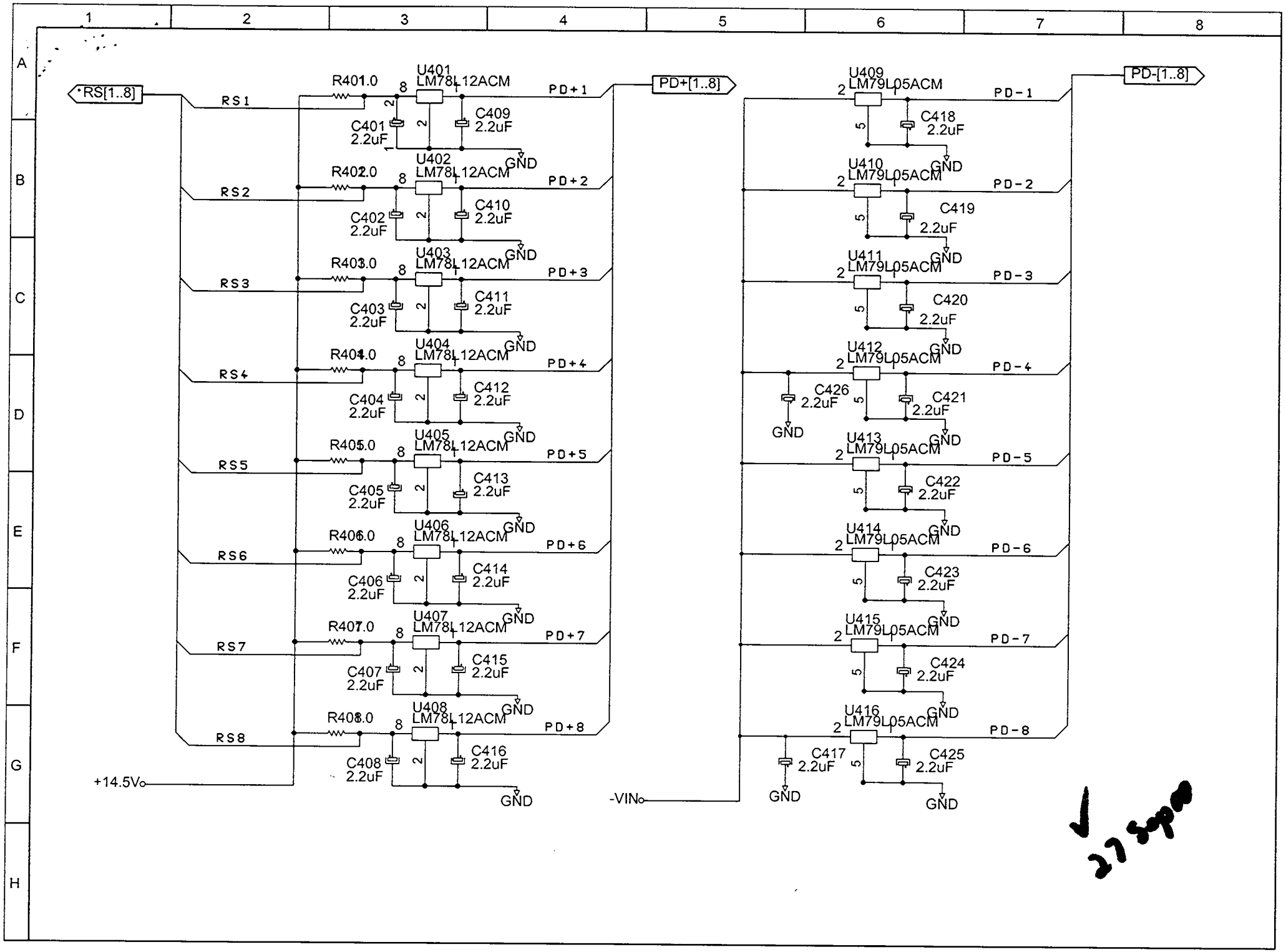
RS[1..8]
RS1
RS2
RS3
RS4
RS5
RS6
RS7
RS8
+14.5V
R401 1.0
R402 2.0
R403 3.0
R404 4.0
R405 5.0
R406 6.0
R407 7.0
R408 8.0
U401 LM78L12ACM
U402 LM78L12ACM
U403 LM78L12ACM
U404 LM78L12ACM
U405 LM78L12ACM
U406 LM78L12ACM
U407 LM78L12ACM
U408 LM78L12ACM
C401 2.2uF
C402 2.2uF
C403 2.2uF
C404 2.2uF
C405 2.2uF
C406 2.2uF
C407 2.2uF
C408 2.2uF
C409 2.2uF
C410 2.2uF
C411 2.2uF
C412 2.2uF
C413 2.2uF
C414 2.2uF
C415 2.2uF
C416 2.2uF
GND
PD+1
PD+2
PD+3
PD+4
PD+5
PD+6
PD+7
PD+8
PD+[1..8]
-VIN
U409 LM79L05ACM
U410 LM79L05ACM
U411 LM79L05ACM
U412 LM79L05ACM
U413 LM79L05ACM
U414 LM79L05ACM
U415 LM79L05ACM
U416 LM79L05ACM
C417 2.2uF
C418 2.2uF
C419 2.2uF
C420 2.2uF
C421 2.2uF
C422 2.2uF
C423 2.2uF
C424 2.2uF
C425 2.2uF
C426 2.2uF
PD-1
PD-2
PD-3
PD-4
PD-5
PD-6
PD-7
PD-8
PD-[1..8]

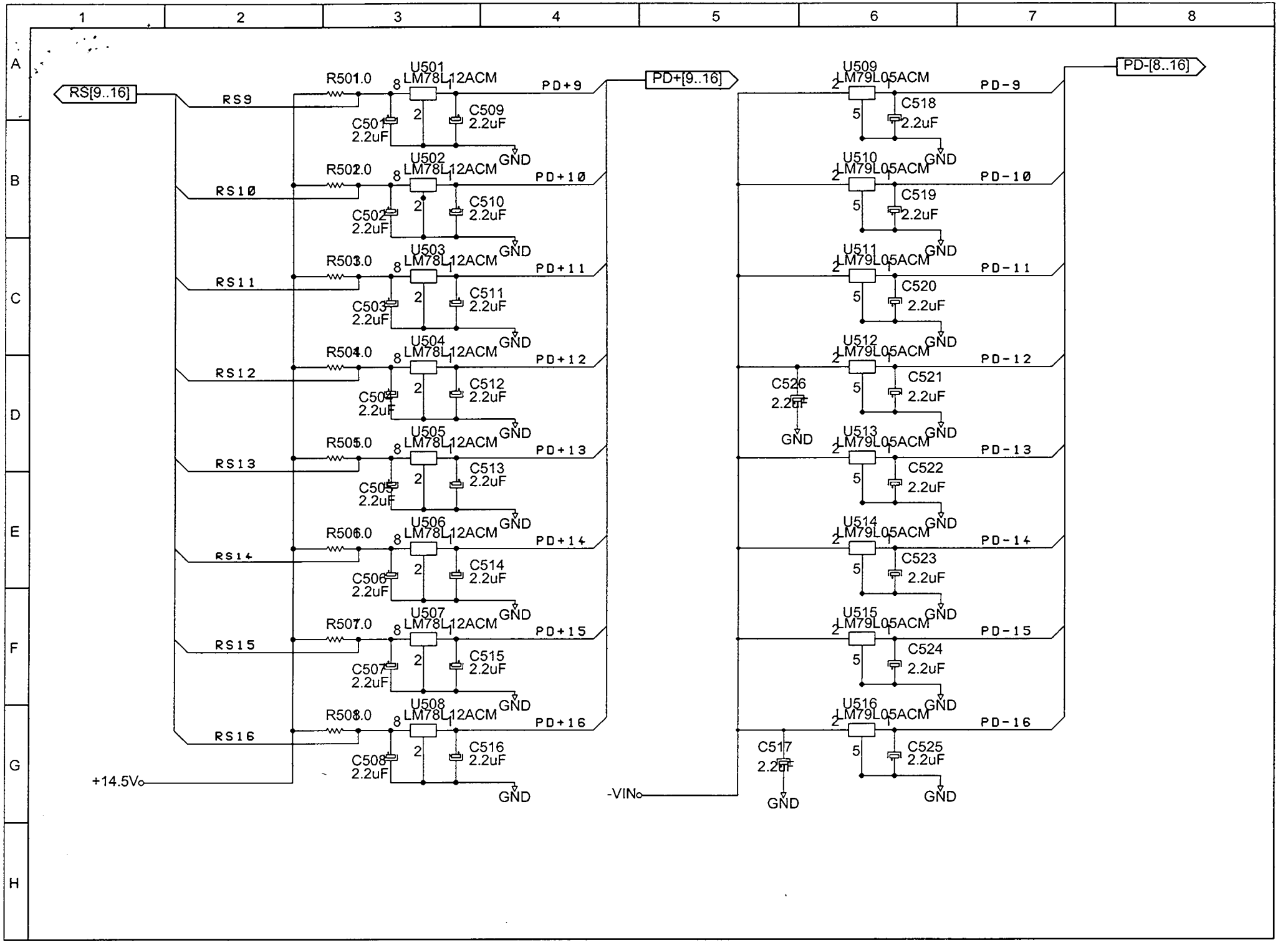
RS[9..16]
RS9
RS10
RS11
RS12
RS13
RS14
RS15
RS16
+14.5V
R501 1.0
R502 1.0
R503 1.0
R504 1.0
R505 1.0
R506 1.0
R507 1.0
R508 1.0
U501 LM78L12ACM
U502 LM78L12ACM
U503 LM78L12ACM
U504 LM78L12ACM
U505 LM78L12ACM
U506 LM78L12ACM
U507 LM78L12ACM
U508 LM78L12ACM
C501 2.2uF
C502 2.2uF
C503 2.2uF
C504 2.2uF
C505 2.2uF
C506 2.2uF
C507 2.2uF
C508 2.2uF
C509 2.2uF
C510 2.2uF
C511 2.2uF
C512 2.2uF
C513 2.2uF
C514 2.2uF
C515 2.2uF
C516 2.2uF
GND
PD+9
PD+10
PD+11
PD+12
PD+13
PD+14
PD+15
PD+16
PD+[9..16]
-VIN
U509 LM79L05ACM
U510 LM79L05ACM
U511 LM79L05ACM
U512 LM79L05ACM
U513 LM79L05ACM
U514 LM79L05ACM
U515 LM79L05ACM
U516 LM79L05ACM
C517 2.2uF
C518 2.2uF
C519 2.2uF
C520 2.2uF
C521 2.2uF
C522 2.2uF
C523 2.2uF
C524 2.2uF
C525 2.2uF
C526 2.2uF
PD-9
PD-10
PD-11
PD-12
PD-13
PD-14
PD-15
PD-16
PD-[8..16]

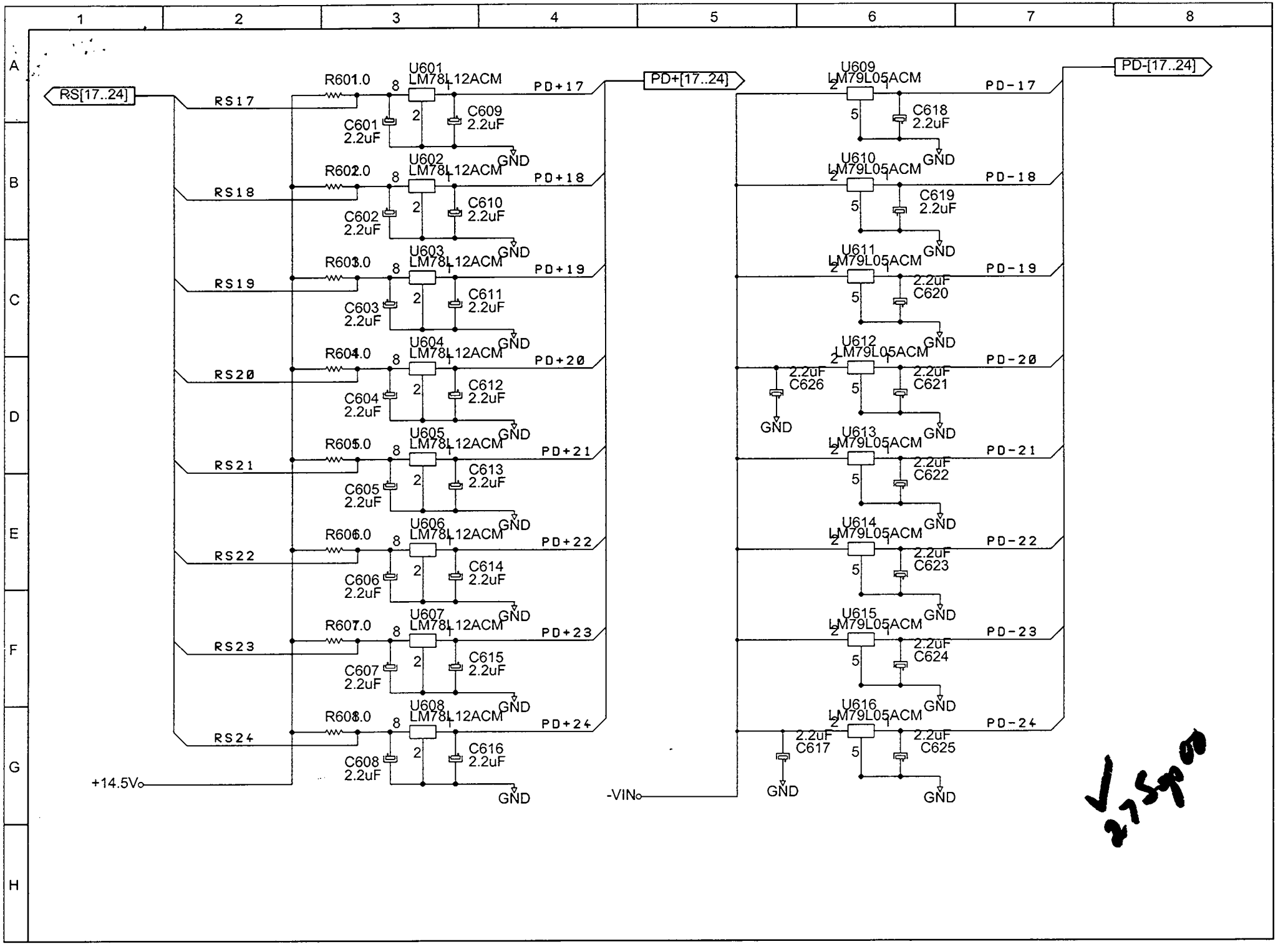
RS[17..24]
RS17
RS18
RS19
RS20
RS21
RS22
RS23
RS24
R601 1.0
R602 2.0
R603 3.0
R604 4.0
R605 5.0
R606 6.0
R607 7.0
R608 8.0
U601 LM78L12ACM
U602 LM78L12ACM
U603 LM78L12ACM
U604 LM78L12ACM
U605 LM78L12ACM
U606 LM78L12ACM
U607 LM78L12ACM
U608 LM78L12ACM
C601 2.2uF
C602 2.2uF
C603 2.2uF
C604 2.2uF
C605 2.2uF
C606 2.2uF
C607 2.2uF
C608 2.2uF
C609 2.2uF
C610 2.2uF
C611 2.2uF
C612 2.2uF
C613 2.2uF
C614 2.2uF
C615 2.2uF
C616 2.2uF
PD+17
PD+18
PD+19
PD+20
PD+21
PD+22
PD+23
PD+24
PD+[17..24]
+14.5V
-VIN
GND
U609 LM79L05ACM
U610 LM79L05ACM
U611 LM79L05ACM
U612 LM79L05ACM
U613 LM79L05ACM
U614 LM79L05ACM
U615 LM79L05ACM
U616 LM79L05ACM
C618 2.2uF
C619 2.2uF
C620 2.2uF
C621 2.2uF
C622 2.2uF
C623 2.2uF
C624 2.2uF
C625 2.2uF
C626 2.2uF
C617 2.2uF
PD-17
PD-18
PD-19
PD-20
PD-21
PD-22
PD-23
PD-24
PD-[17..24]

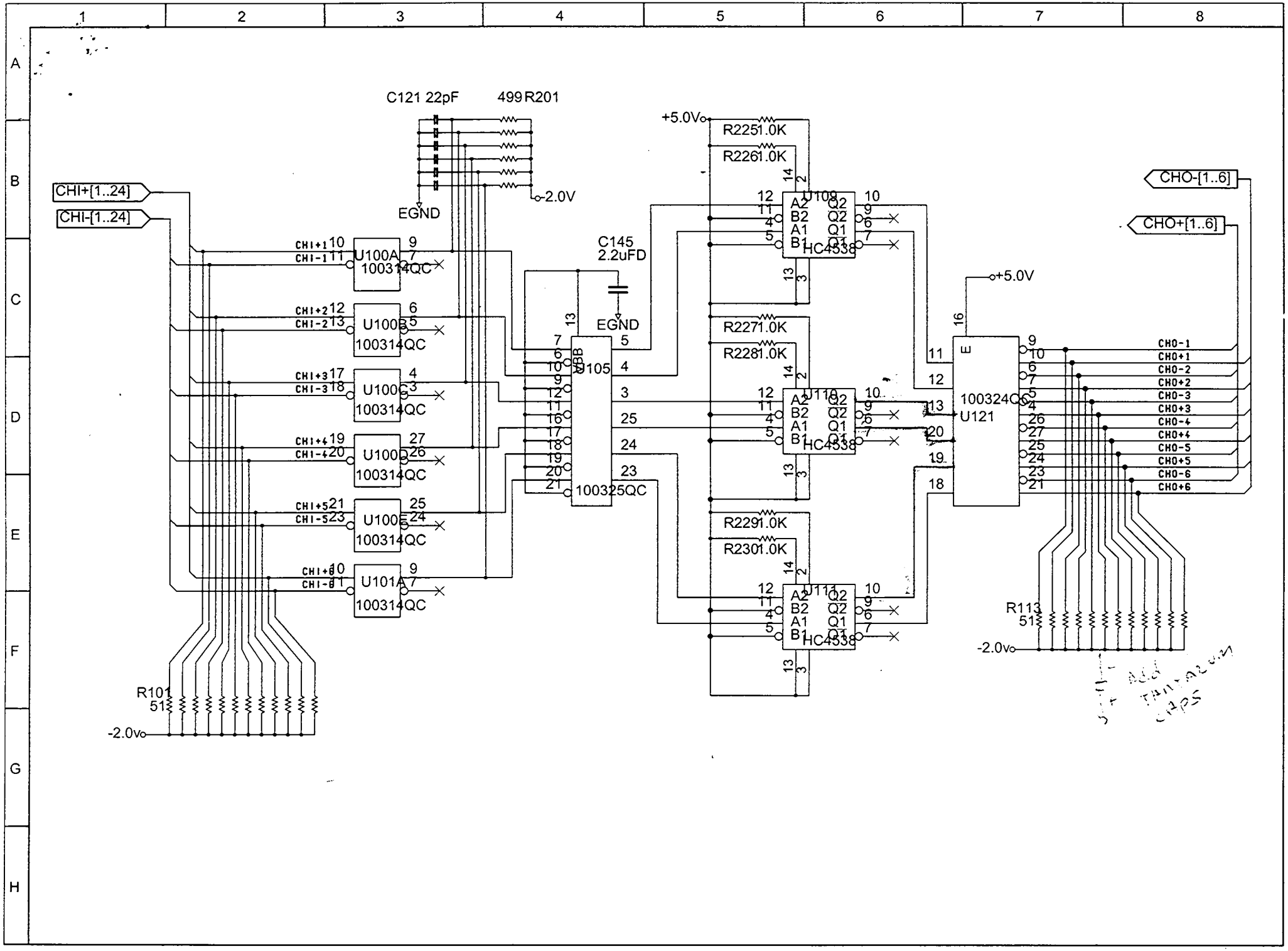
C121 22pF
499 R201
-2.0V
EGND
CHI+[1..24]
CHI-[1..24]
U100A 100314QC
U100B 100314QC
U100C 100314QC
U100D 100314QC
U100E 100314QC
U101A 100314QC
C145 2.2uFD
EGND
U105 100325QC
+5.0V
R225 1.0K
R226 1.0K
R227 1.0K
R228 1.0K
R229 1.0K
R230 1.0K
U108 HC4538
U110 HC4538
U111 HC4538
+5.0V
U121 100324QC
CHO-[1..6]
CHO+[1..6]
CHO-1
CHO+1
CHO-2
CHO+2
CHO-3
CHO+3
CHO-4
CHO+4
CHO-5
CHO+5
CHO-6
CHO+6
R113 51
-2.0V
R101 51
-2.0V

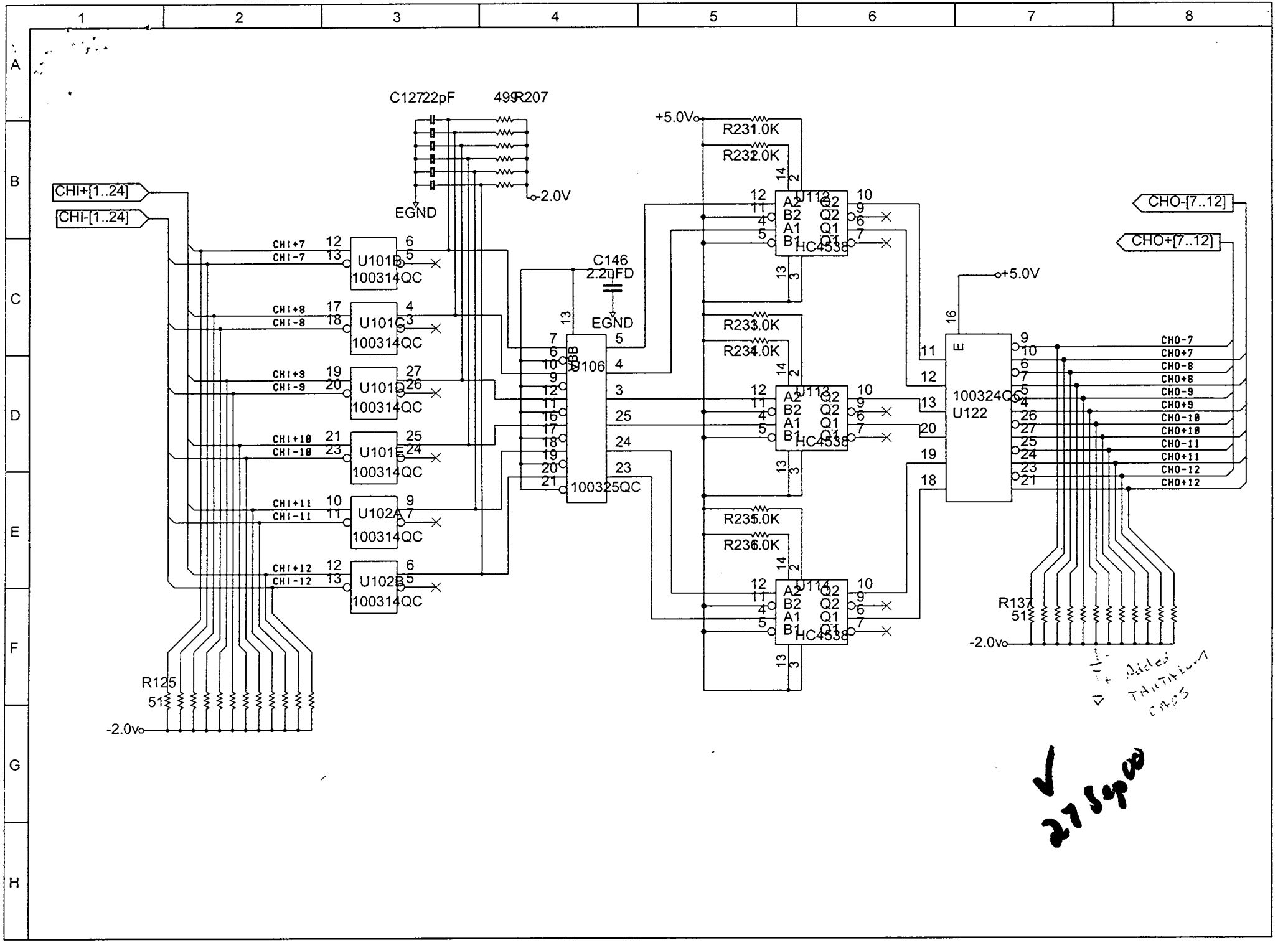
C127 22pF
R207 499
+5.0V
R231 1.0K
R232 1.0K
-2.0V
EGND
CHI+[1..24]
CHI-[1..24]
CHI+7
CHI-7
U101B
100314QC
CHI+8
CHI-8
U101C
100314QC
CHI+9
CHI-9
U101D
100314QC
CHI+10
CHI-10
U101E
100314QC
CHI+11
CHI-11
U102A
100314QC
CHI+12
CHI-12
U102B
100314QC
C146
2.2uFD
EGND
U106
100325QC
U112
HC4538
R233 1.0K
R234 1.0K
U113
HC4538
R235 1.0K
R236 1.0K
U114
HC4538
+5.0V
U122
100324QC
CHO-[7..12]
CHO+[7..12]
CHO-7
CHO+7
CHO-8
CHO+8
CHO-9
CHO+9
CHO-10
CHO+10
CHO-11
CHO+11
CHO-12
CHO+12
R137 51
-2.0V
R125 51
-2.0V
Added TANTALUM CAPS

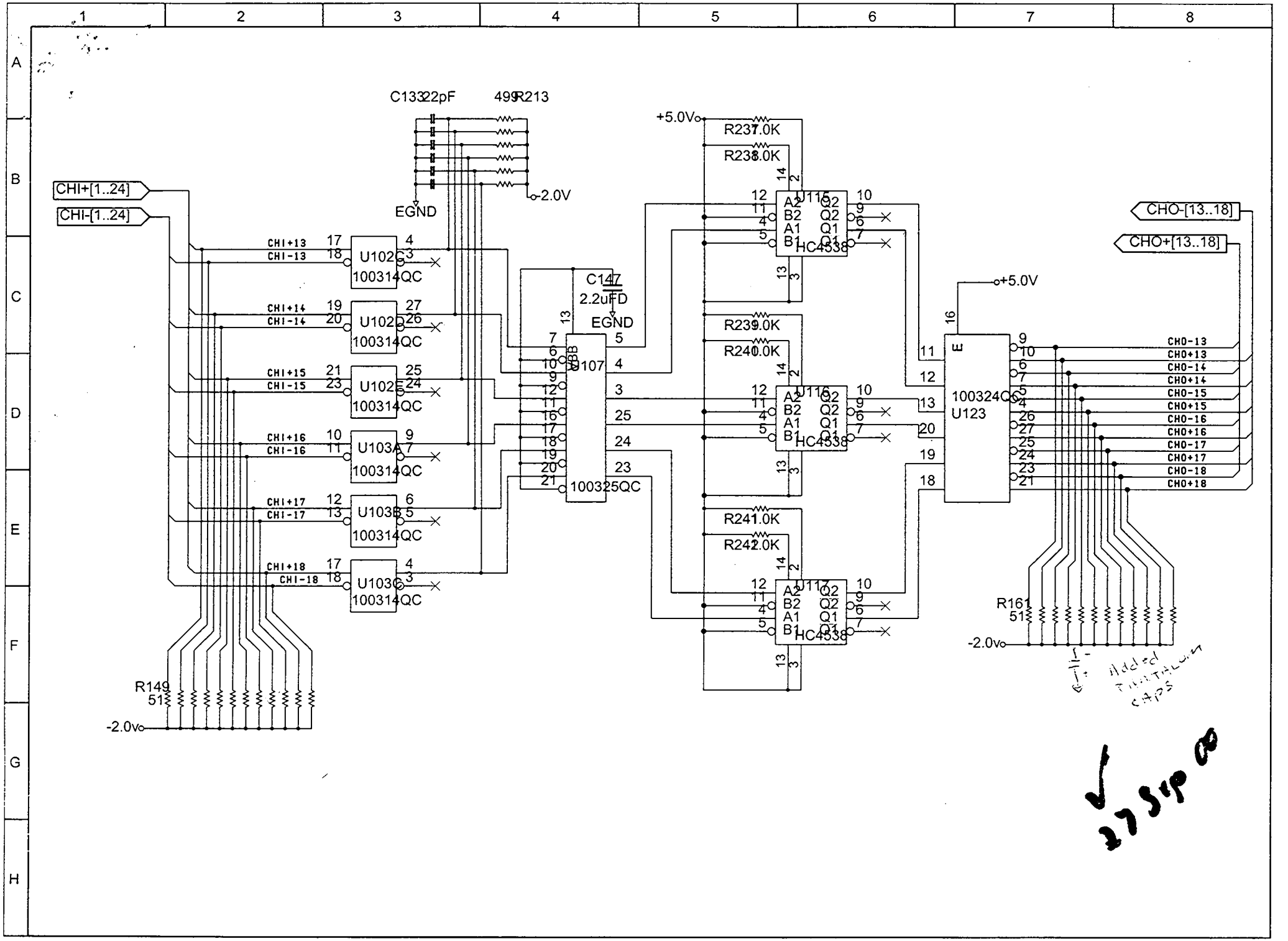

C133 22pF
499 R213
EGND
-2.0V
CHI+[1..24]
CHI-[1..24]
CHI+13
CHI-13
CHI+14
CHI-14
CHI+15
CHI-15
CHI+16
CHI-16
CHI+17
CHI-17
CHI+18
CHI-18
U102C 100314QC
U102D 100314QC
U102E 100314QC
U103A 100314QC
U103B 100314QC
U103C 100314QC
C147 2.2uFD
EGND
U107 100325QC
+5.0V
R237 7.0K
R238 8.0K
R239 9.0K
R240 10.0K
R241 1.0K
R242 2.0K
U115 HC4538
U116 HC4538
U117 HC4538
+5.0V
U123 100324QC
CHO-[13..18]
CHO+[13..18]
CHO-13
CHO+13
CHO-14
CHO+14
CHO-15
CHO+15
CHO-16
CHO+16
CHO-17
CHO+17
CHO-18
CHO+18
R161 51
-2.0V
R149 51
-2.0V
Added Tantalum caps
27 Sep 00

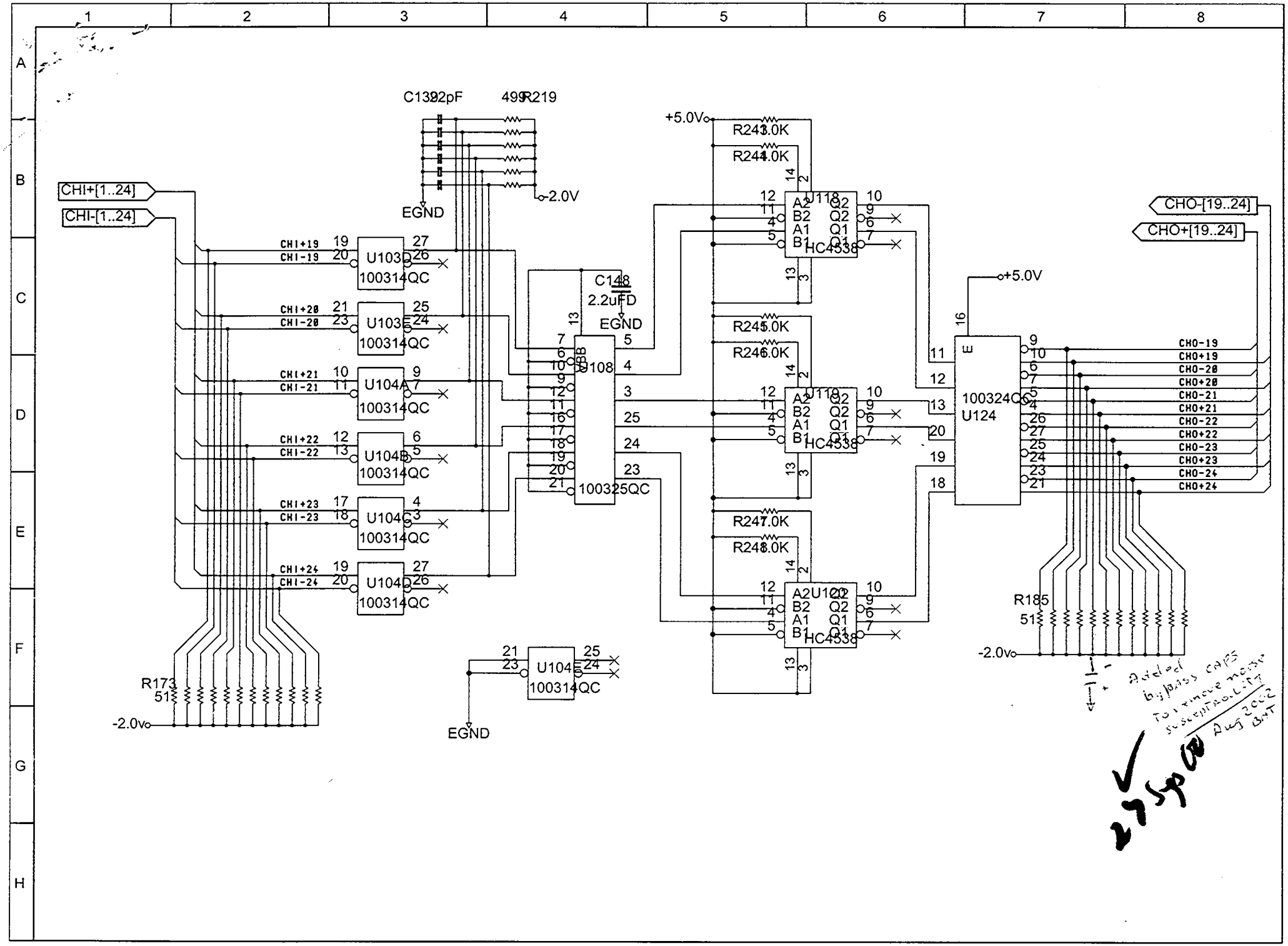

CHI+[1..24]
CHI-[1..24]
CHO-[19..24]
CHO+[19..24]
C139 2pF
499 R219
-2.0V
EGND
+5.0V
R243 3.0K
R244 4.0K
R245 5.0K
R246 6.0K
R247 7.0K
R248 8.0K
U118
U119
U120
HC4538
U103D
U103E
U104A
U104B
U104C
U104D
U104E
100314QC
C148
2.2uFD
U108
100325QC
U124
100324QC
R173
51
R185
51
CHI+19
CHI-19
CHI+20
CHI-20
CHI+21
CHI-21
CHI+22
CHI-22
CHI+23
CHI-23
CHI+24
CHI-24
CHO-19
CHO+19
CHO-20
CHO+20
CHO-21
CHO+21
CHO-22
CHO+22
CHO-23
CHO+23
CHO-24
CHO+24
Added bypass caps to remove noise susceptibility
Aug 2002 BAT
27 Sep 02

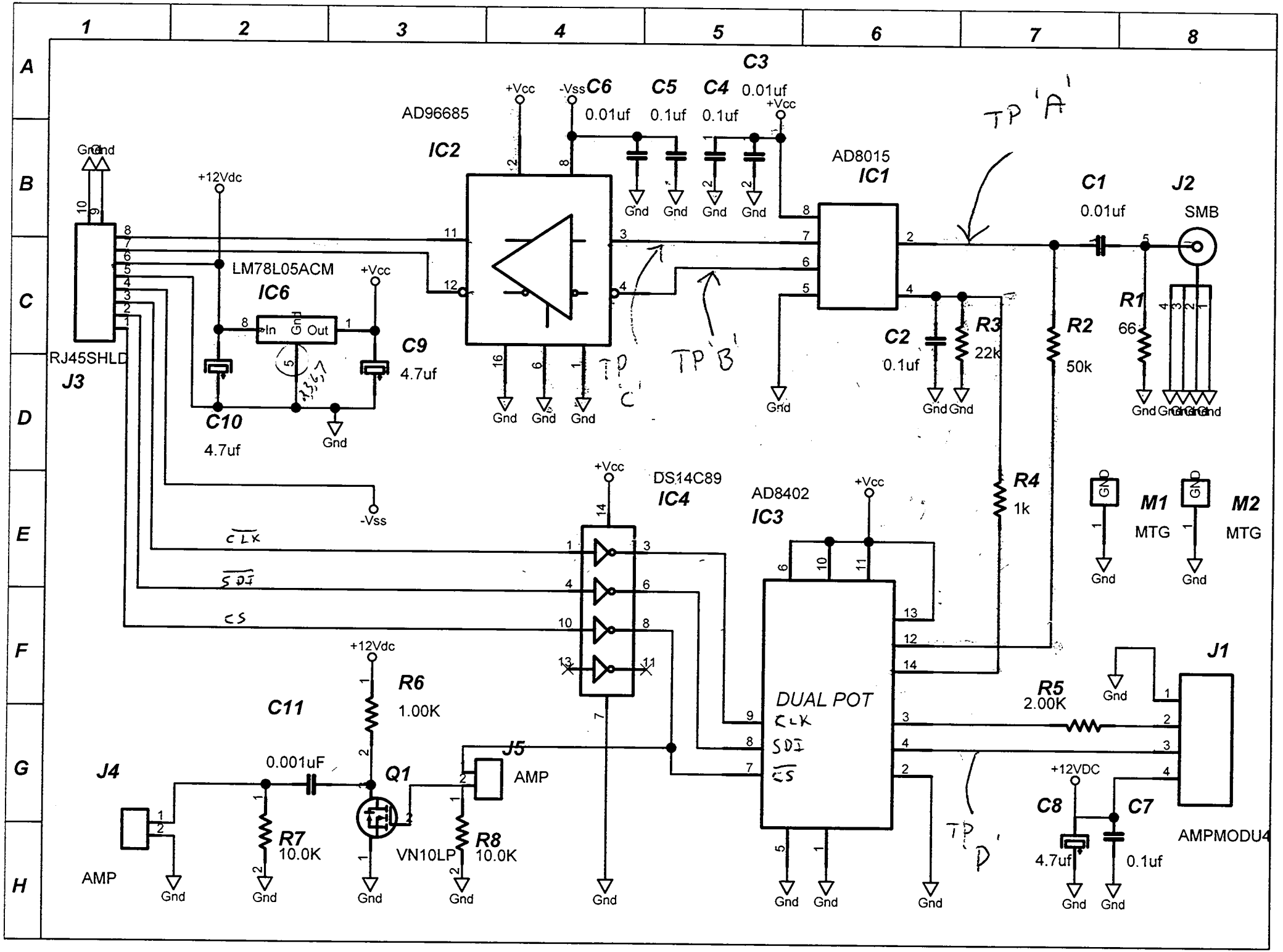
1
2
3
4
5
6
7
8
A
B
C
D
E
F
G
H
C3
0.01uf
+Vcc
-Vss
C6
0.01uf
C5
0.1uf
C4
0.1uf
+Vcc
AD96685
IC2
AD8015
IC1
TP 'A'
C1
0.01uf
J2
SMB
Gnd
+12Vdc
LM78L05ACM
IC6
In
Gnd
Out
+Vcc
C9
4.7uf
C10
4.7uf
RJ45SHLD
J3
-Vss
TP 'C'
TP 'B'
C2
0.1uf
R3
22k
R2
50k
R1
66
DS14C89
IC4
AD8402
IC3
+Vcc
R4
1k
M1
MTG
M2
MTG
CLK
SDI
CS
DUAL POT
CLK
SDI
CS
R5
2.00K
J1
AMPMODU4
TP 'D'
+12VDC
C8
4.7uf
C7
0.1uf
C11
0.001uF
R6
1.00K
J4
AMP
J5
AMP
Q1
VN10LP
R7
10.0K
R8
10.0K

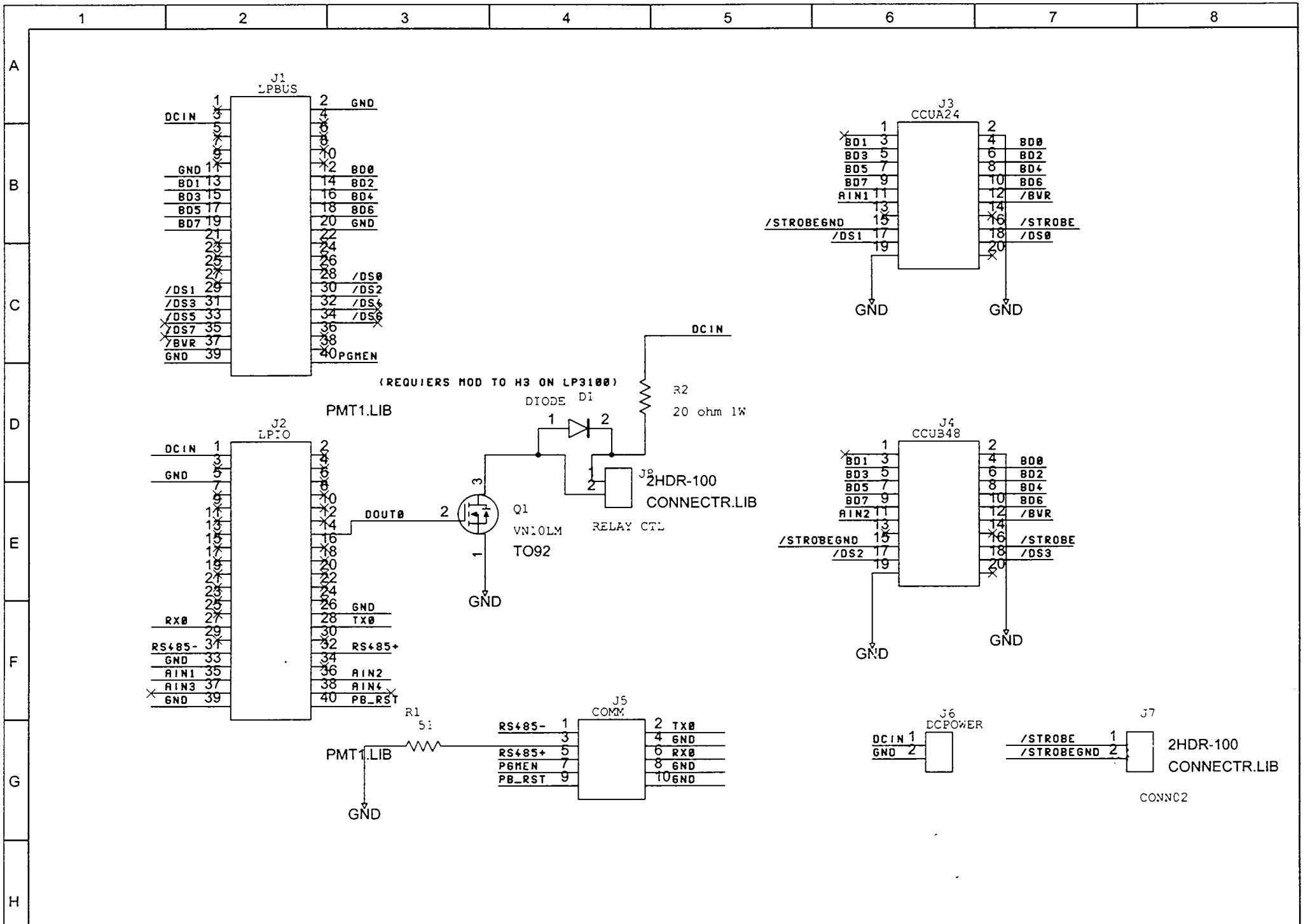
J1
LPBUS
DCIN
GND
BD1
BD3
BD5
BD7
BD0
BD2
BD4
BD6
/DS0
/DS1
/DS2
/DS3
/DS4
/DS5
/DS6
/DS7
/BVR
PGMEN
PMT1.LIB
(REQUIERS MOD TO H3 ON LP3100)
DIODE Di
R2
20 ohm 1W
J2
LPIO
DOUT0
Q1
VN10LM
TO92
RELAY CTL
J8
2HDR-100
CONNECTR.LIB
RX0
TX0
RS485-
RS485+
AIN1
AIN2
AIN3
AIN4
PB_RST
R1
51
J5
COMM
PGMEN
J3
CCUA24
/STROBEGND
/STROBE
/DS0
J4
CCUB48
AIN2
/DS2
/DS3
J6
DCPOWER
J7
CONNC2

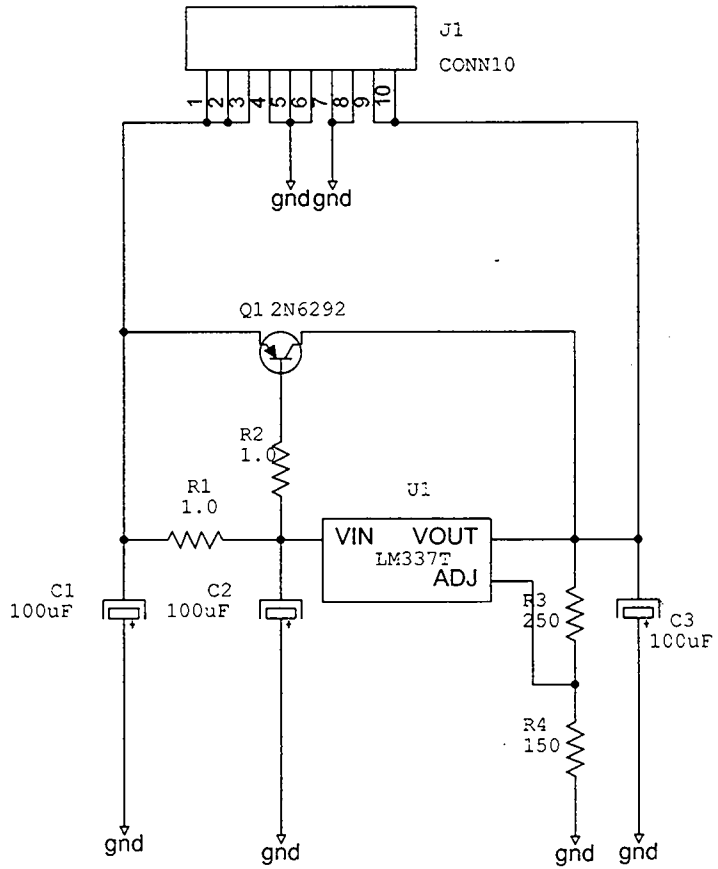
J1
CONN10
1
2
3
4
5
6
7
8
9
10
gnd
gnd
Q1 2N6292
R2
1.0
R1
1.0
U1
VIN
VOUT
LM337T
ADJ
C1
100uF
C2
100uF
R3
250
C3
100uF
R4
150
gnd
gnd
gnd
gnd

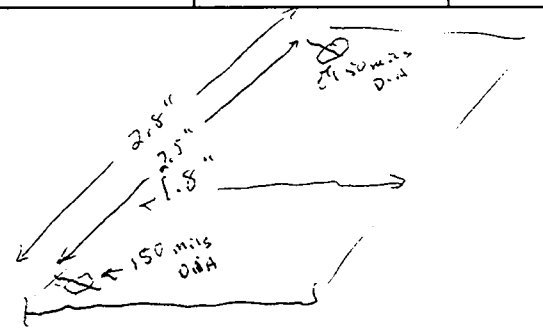
2.5"
2.5"
1.5"
150 mils
Dia