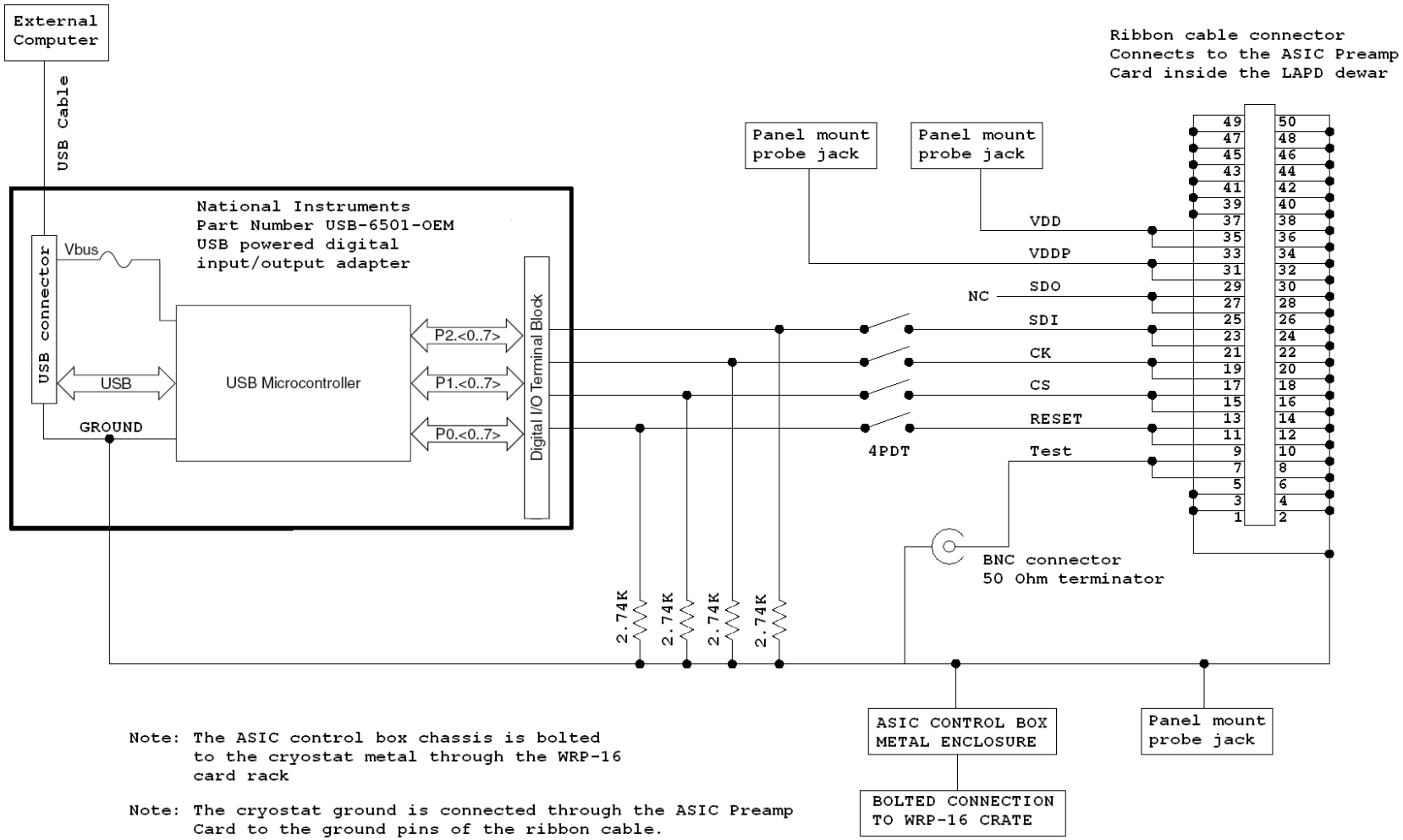

Note: The ASIC control box chassis is bolted to the cryostat metal through the WRP-16 card rack

Note: The cryostat ground is connected through the ASIC Preamp Card to the ground pins of the ribbon cable.

Figure 1. Schematic of the ASIC Control Box.