REV	DESCRIPTION	DRAWN / APPROVED	DATE / DATE
A	ADDED CHANNEL & ANGLES & REDREW FOR CLARITY	J. TILLMAN	08-MAR-2012
		J. RAUCH	27-APR-2012
B	REVISED NOTE 6	J. TILLMAN	01-AUG-2012
		J. RAUCH	02-AUG-2012
C	REMOVE COLOR FROM NOTE 6 ADDED ALL-AROUND TO WELDS	J. RAUCH	20-FEB-2013
		R.SANDERS	03-MAR-2013

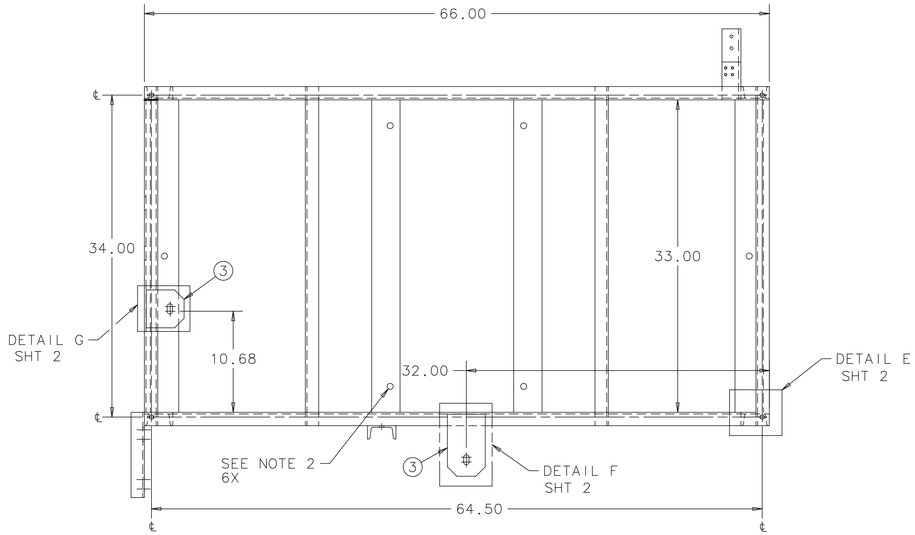

NOTES:

1. THE DIAGONAL DIMENSIONS TO BE WITHIN .13 INCHES AFTER WELDING ALL SIX SIDES
2. MATCH DRILL MOUNTING HOLES IN LOWER CHANNEL AT TIME OF FINAL ASSEMBLY WITH FILTER VESSELS.
3. ALL WELDMENTS MUST BE IN ACCORDANCE WITH THE STRUCTURAL WELDING CODE ANSI/AWS D1.1
4. ALL WELDS SHALL BE MADE IN A SEQUENCE THAT WILL BALANCE THE APPLIED HEAT OF WELDING WHILE THE WELDING PROGRESSES. THE PROCEDURES AND SEQUENCE SHALL BE SUCH AS WILL MINIMIZE DISTORTION AND SHRINKAGE.
5. ALL WELD METALS ARE E70XX UNLESS OTHERWISE SPECIFIED.
6. PAINT WITH OXIDE DAMP-PROOF RUSTOLEUM PRIMER OR EQUIVALENT. (C) (B)
7. APPROXIMATE WEIGHT: 375 LBS.

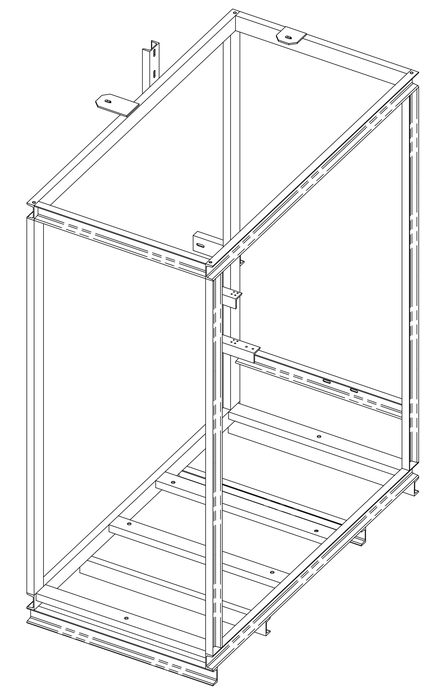

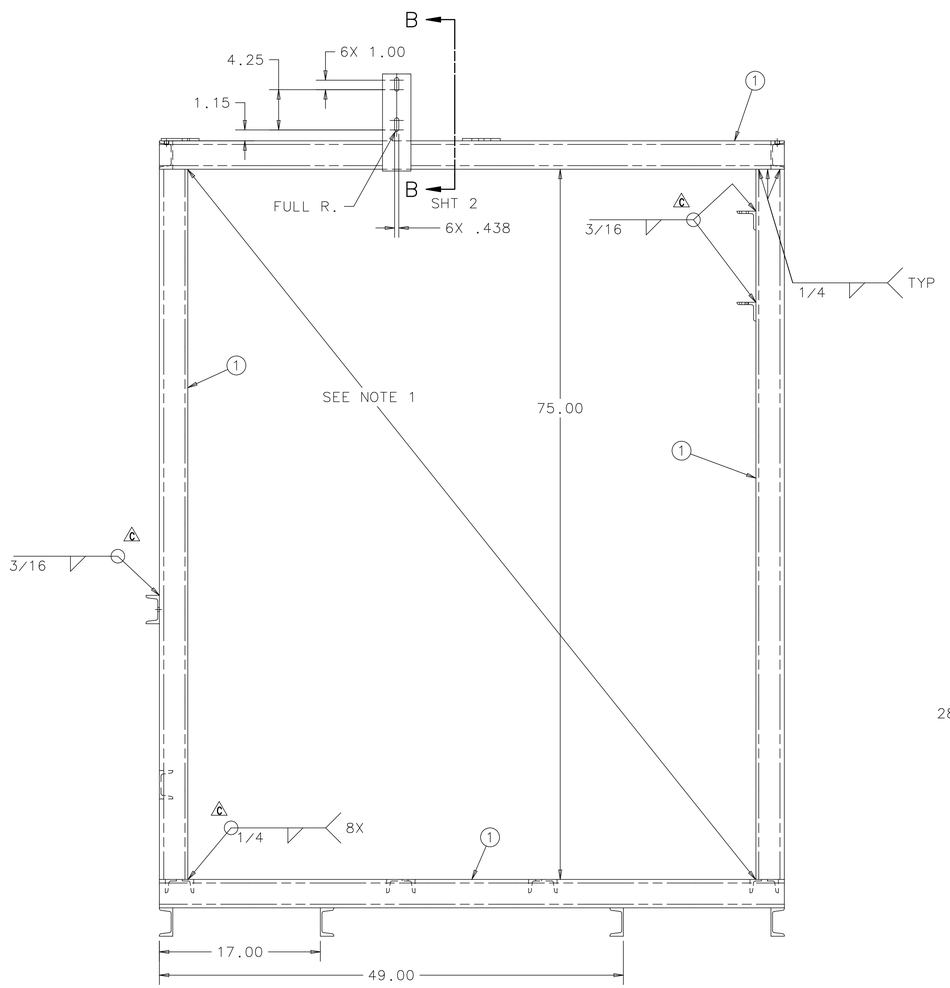

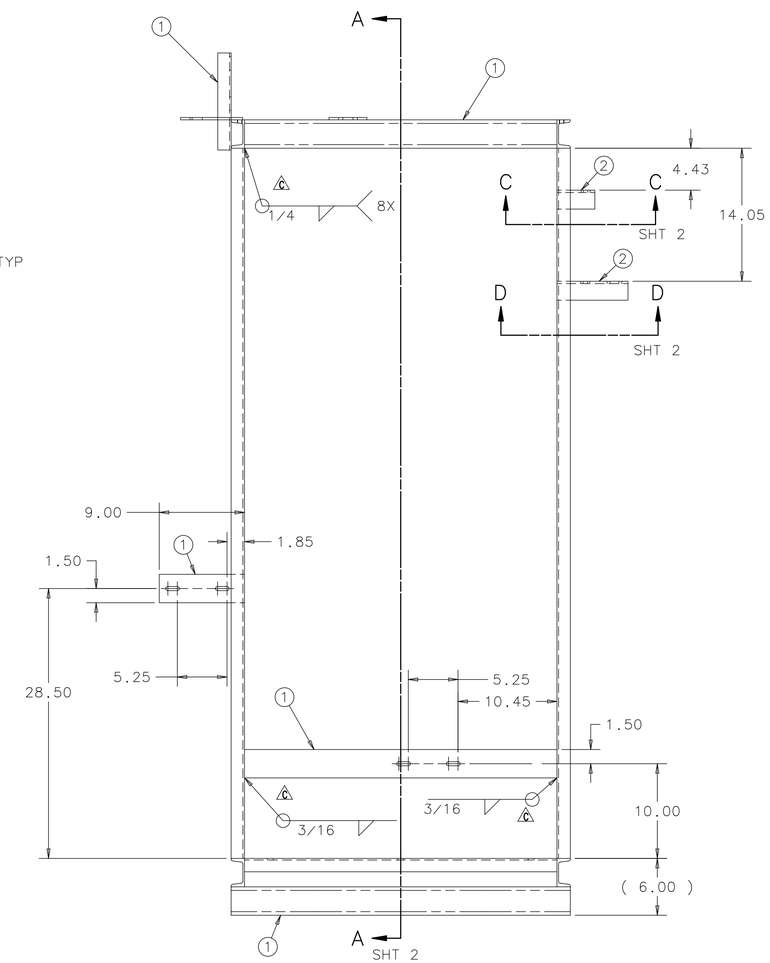

ITEM	PART NO.	DESCRIPTION OR SIZE	QTY.
3	COML	FLAT BAR; 1/4 X 4 A36	2
2	COML	ANGLE; 2 X 2 X 1/4 A36	2
1	COML	CHANNEL; 3 x 4.1# A36 LENTGH TO SUIT	21

PARTS LIST

UNLESS OTHERWISE SPECIFIED			ORIGINATOR	R.SANDERS	09-JUN-2010
.XX	.XXX	ANGLES	DRAWN	J.MATESKI	09-JUN-2010
± .13	± .030	± ---	CHECKED	J.RAUCH	30-JUL-2010
			APPROVED	R.SANDERS	02-AUG-2010

1. BREAK ALL SHARP EDGES .02 MAX.
2. DO NOT SCALE DRAWING.
3. DIMENSIONS BASED UPON ASME Y14.5M-1994
4. MAX. ALL MACH. SURFACES 250
5. DRAWING UNITS: U.S. INCH

USED ON: ME-489577

MATERIAL: SEE PARTS LIST ON SHEET 1

FERMI NATIONAL ACCELERATOR LABORATORY
UNITED STATES DEPARTMENT OF ENERGY

E974-MICROBOONE - INFRASTRUCTURE SERVICE EQUIPMENT
MICROBOONE FILTER SKID FRAME

SCALE	DRAWING NUMBER	SHEET	REV
1:8 & AS NOTED	3974.220-MD-486016	1 OF 2	C

CREATED WITH : Ideas12NXSeries | GROUP: PPD/MECHANICAL DEPARTMENT

REV	DESCRIPTION	DRAWN / APPROVED	DATE / DATE
A	ADDED CHANNEL & ANGLES & REDREW FOR CLARITY	J. TILLMAN	08-MAR-2012
		J. RAUCH	27-APR-2012
B	REVISED NOTE 6	J. TILLMAN	01-AUG-2012
		J. RAUCH	02-AUG-2012
C	REMOVE COLOR FROM NOTE 6	J. RAUCH	20-FEB-2013
	ADDED ALL-AROUND TO WELDS	R.SANDERS	03-MAR-2013

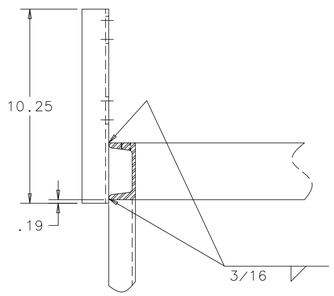

SECTION B-B
SCALE: 1:4

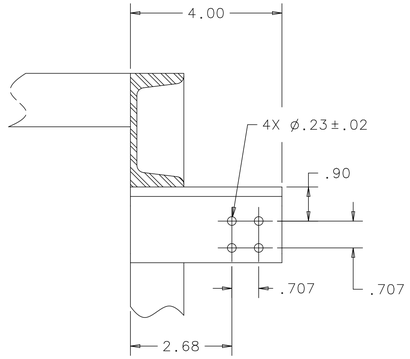

SECTION C-C
SCALE: 1:4

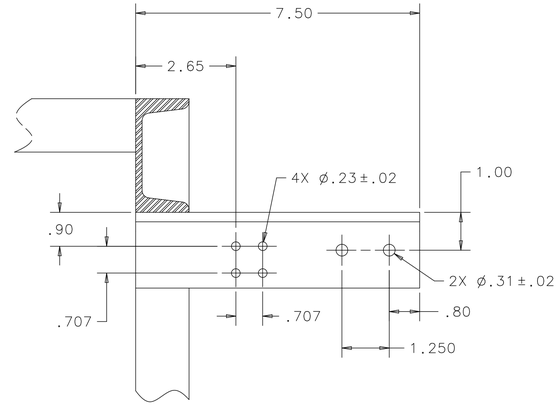

SECTION D-D
SCALE: 1:2

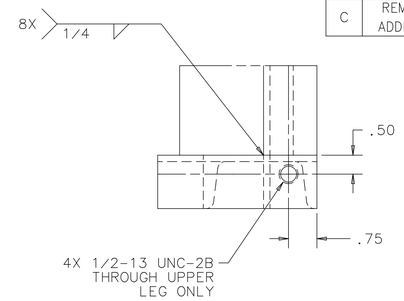

DETAIL E
SCALE: 1:2

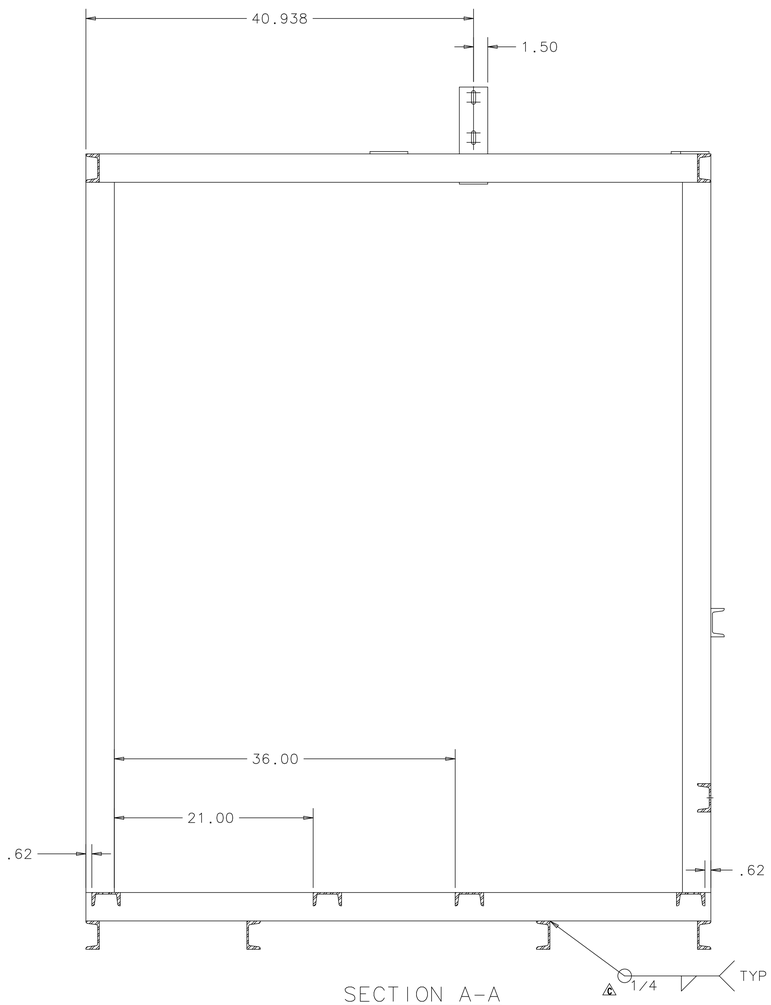

SECTION A-A

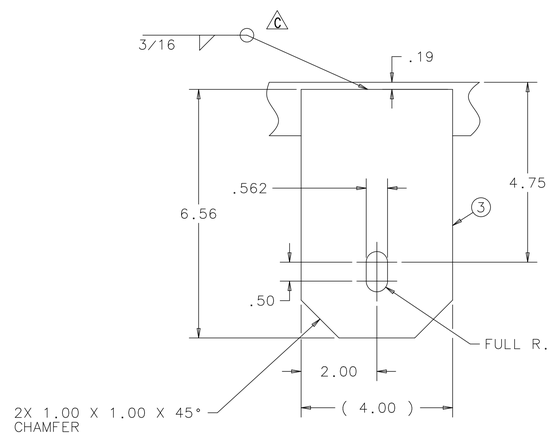

DETAIL F
SCALE: 1:2

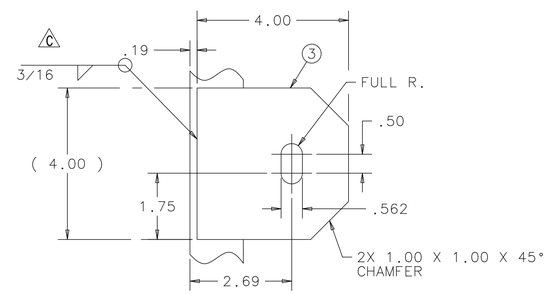

DETAIL G
SCALE: 1:2

UNLESS OTHERWISE SPECIFIED			ORIGINATOR	R.SANDERS	09-JUN-2010
.XX	.XXX	ANGLES	DRAWN	J.MATESKI	09-JUN-2010
± .13	± .030	± ---	CHECKED	J.RAUCH	30-JUL-2010
1. BREAK ALL SHARP EDGES .02 MAX. 2. DO NOT SCALE DRAWING. 3. DIMENSIONS BASED UPON ASME Y14.5M-1994 4. MAX. ALL MACH. SURFACES 250 5. DRAWING UNITS: U.S. INCH			APPROVED	R.SANDERS	02-AUG-2010
			USED ON	ME-489577	
			MATERIAL	SEE PARTS LIST ON SHEET 1	

FERMI NATIONAL ACCELERATOR LABORATORY
UNITED STATES DEPARTMENT OF ENERGY

E974-MICROBOONE - INFRASTRUCTURE SERVICE EQUIPMENT MICROBOONE FILTER SKID FRAME

SCALE	DRAWING NUMBER	SHEET	REV
1:8 & AS NOTED	3974.220-MD-486016	2 OF 2	C

CREATED WITH : Ideas12NXSeries GROUP: PPD/MECHANICAL DEPARTMENT