REV	DESCRIPTION	DRAWN	DATE
		APPROVED	DATE

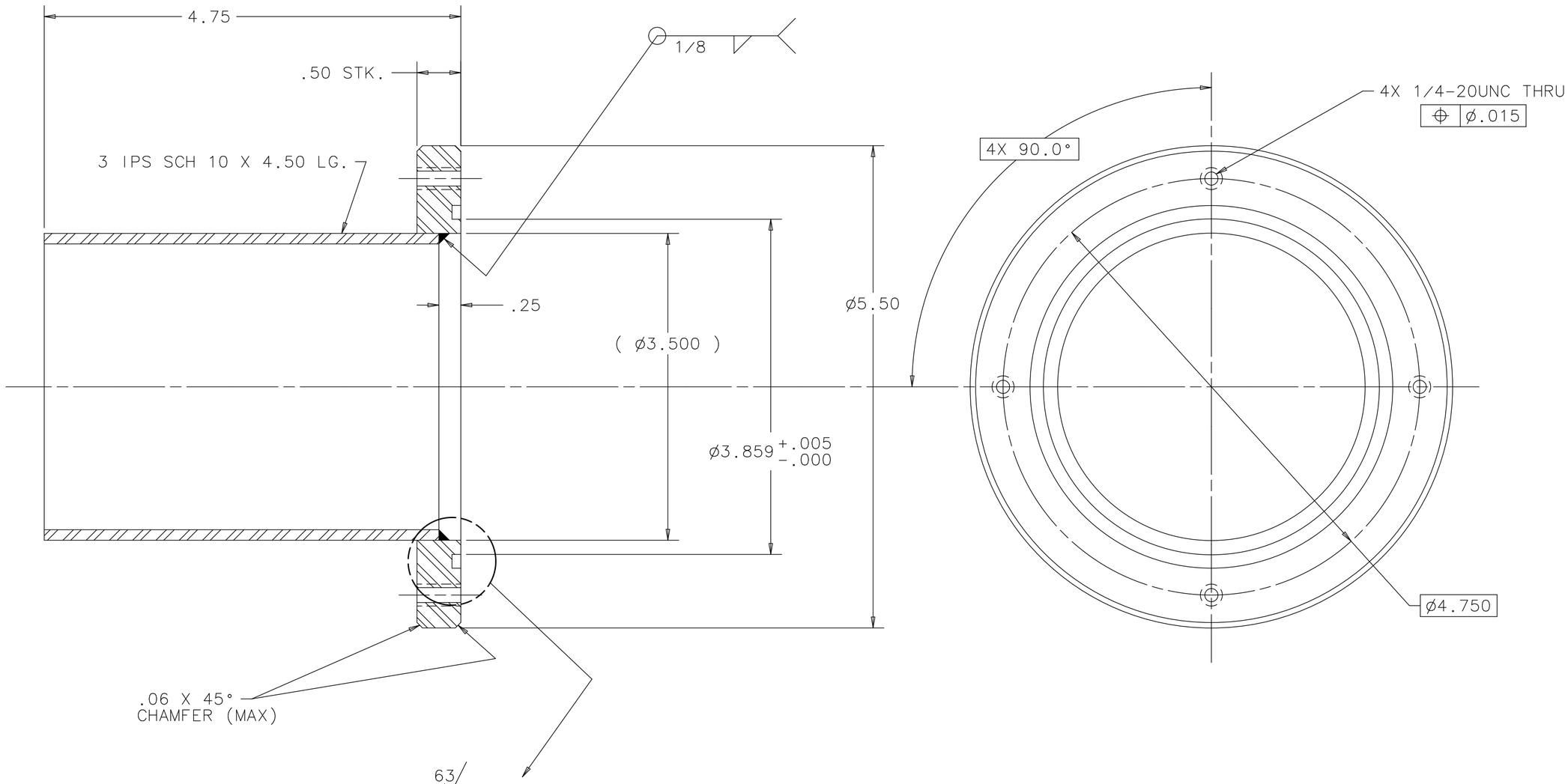

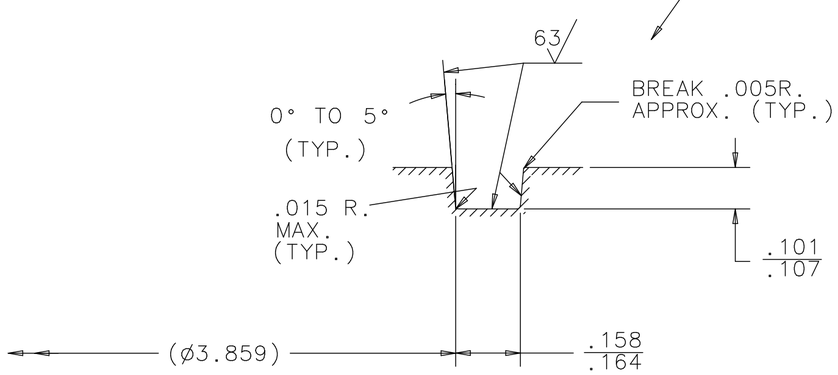

1/8 "O" RING GROOVE

(NOT TO SCALE)
(ROTATED 90°)
USE PARKER O-RING #241

UNLESS OTHERWISE SPECIFIED			ORIGINATOR	R.SANDERS	14-JUN-2010
.XX	.XXX	ANGLES	DRAWN	J.MATESKI	14-JUN-2010
± .03	± .005	± 1°	CHECKED	J.RAUCH	30-JUL-2010
			APPROVED	R.SANDERS	02-AUG-2010

1. BREAK ALL SHARP EDGES .015 MAX.
2. DO NOT SCALE DRAWING.
3. DIMENSIONS BASED UPON ASME Y14.5M-1994
4. MAX. ALL MACH. SURFACES 125
5. DRAWING UNITS: U.S. INCH

USED ON: 3974.220-ME-486011

MATERIAL: 304-SST

FERMI NATIONAL ACCELERATOR LABORATORY
UNITED STATES DEPARTMENT OF ENERGY

E974-MICROBOONE - CRYOGENICS SUPPORT EQUIPMENT BODY - PARALLEL PLATE RELIEF

SCALE	DRAWING NUMBER	SHEET	REV
1:1	3974.220-MC-486020	1 OF 1	

CREATED WITH : Ideas12NXSeries | GROUP: PPD/MECHANICAL DEPARTMENT