REV	DESCRIPTION	DRAWN	DATE
		APPROVED	DATE
A	REVISED & REDRAWN	J. TILLMAN	08-MAR-2012
		J. RAUCH	27-APR-2012

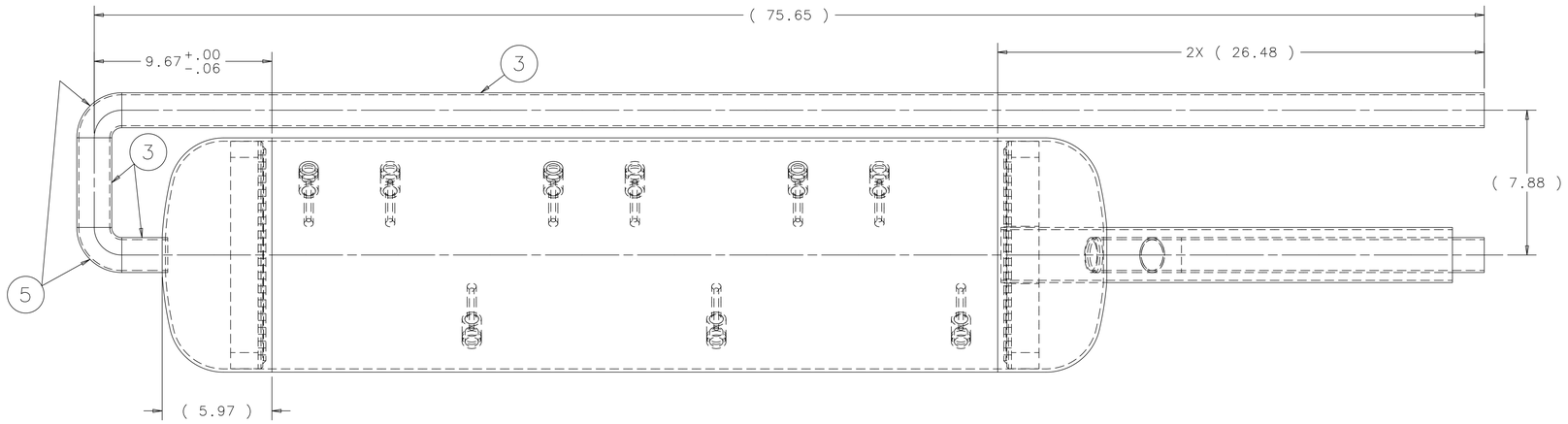

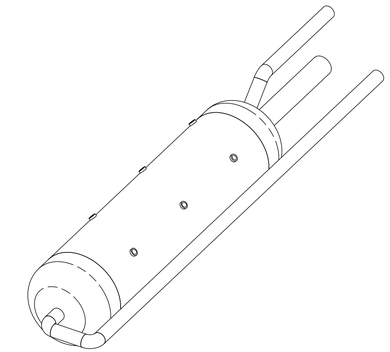

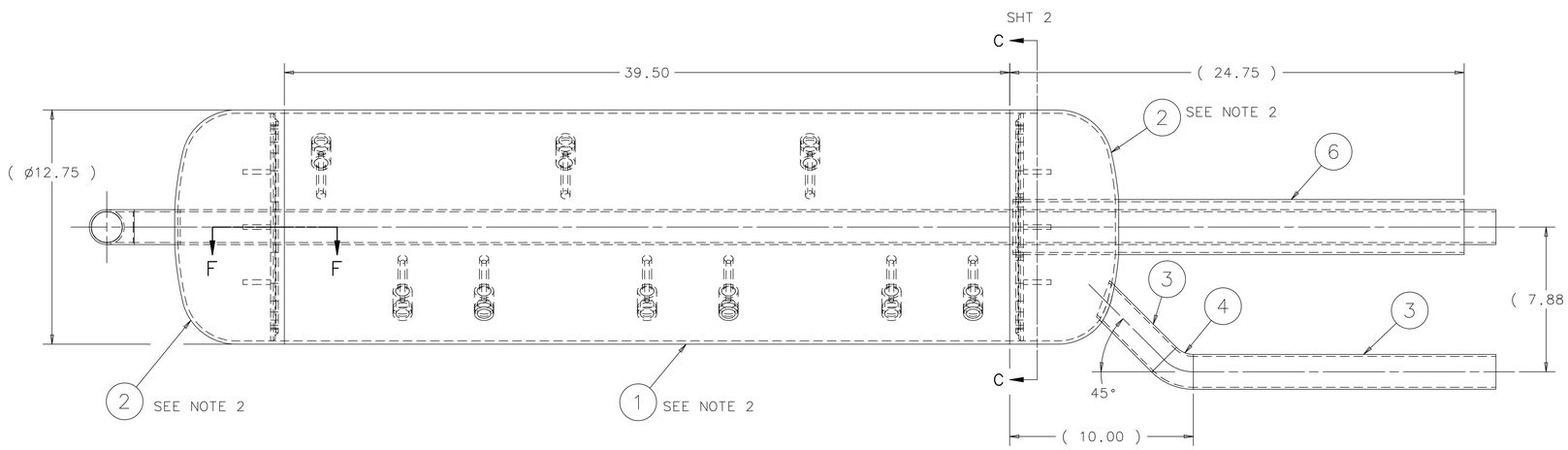

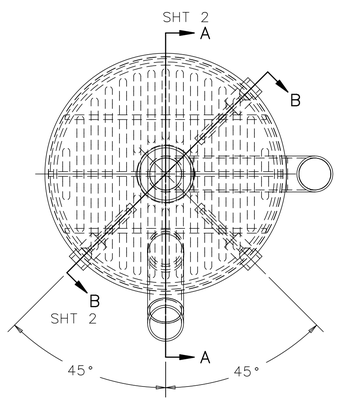

ITEM	PART NO.	DESCRIPTION OR SIZE	QTY.
12	COML	FLAT BAR, 1.5 X .25 LENGTH TO SUIT; 304 SS	8
11	COML	WOVEN WIRE SCREEN; 60X60 MESH; 0.0075 WIRE DIA.; 304 SS MCMASTER P/N: 85385T425	2
10	COML	WOVEN WIRE SCREEN; 8X8 MESH; 0.035 WIRE DIA.; 304 SS MCMASTER P/N: 85385T369	2
9	COML	SLOTTED PLATE; 1/8 THK 304 SS	2
8	COML	SLOTTED PLATE; 1/4 THK 304 SS	2
7	COML	OMEGA THERMOWELL; P/N: 3/4-260W-U21/2-304SS	9
6	COML	TUBE, 3.00 O.D. X .120 WALL LENGTH TO SUIT; 304 SS	1
5	COML	ELBOW, 90°; S.R.; 1-1/2" SCH 10 304 SS	2
4	COML	ELBOW, 45°; L.R.; 1-1/2" SCH 10 304 SS	1
3	COML	PIPE; 1-1/2" SCH 10 LENGTH TO SUIT; 304 SS	5
2	COML	PIPE CAP; 12" NPS 304 SS	2
1	COML	PIPE; 12" NPS LENGTH TO SUIT; 304 SS	1

PARTS LIST

UNLESS OTHERWISE SPECIFIED			ORIGINATOR	R.SANDERS	25-JUN-2010
.XX	.XXX	ANGLES	DRAWN	J.MATESKI	25-JUN-2010
± .06	± .015	± 1°	CHECKED	J.RAUCH	30-JUL-2010
			APPROVED	R.SANDERS	02-AUG-2010

1. BREAK ALL SHARP EDGES .015 MAX.
2. DO NOT SCALE DRAWING.
3. DIMENSIONS BASED UPON ASME Y14.5M-1994
4. MAX. ALL MACH. SURFACES 250
5. DRAWING UNITS: U.S. INCH

USED ON: MD-489563

MATERIAL: SEE PARTS LIST ON SHEET 1

FERMI NATIONAL ACCELERATOR LABORATORY
UNITED STATES DEPARTMENT OF ENERGY

E974-MICROBOONE - INFRASTRUCTURE SERVICE EQUIPMENT MICROBOONE FILTER INNER VESSEL

SCALE	DRAWING NUMBER	SHEET	REV
1:4 & AS NOTED	3974.220-MD-486036	1 OF 3	A

CREATED WITH : Ideas12NXSeries GROUP: PPD/MECHANICAL DEPARTMENT

NOTES:

1. INNER VESSEL DESIGN REQUIREMENTS:
   CONTENTS FLUID = LIQUID ARGON.
   FILTER MATERIAL = MOLECULAR SIEVE 0.8g/cc DENSITY (INSTALLED BY FERMILAB).
   MINIMUM TEMPERATURE = -320 F.
   MAXIMUM TEMPERATURE = 500 F.
   MAWP = 100 psig WITH FULL EXTERNAL VACUUM.
   EXTERNAL PRESSURE = 15 psid. INTERNAL VESSEL UNDER FULL VACUMM AND ATMOSPHERIC PRESSURE IN VACUUM VESSEL.
   CODE REQUIREMENT = ASME U STAMP, NATIONAL BOARD REGISTRATION IS REQUIRED. U STAMP PLATE TO BE LOCATED ON VESSEL. DUPLICATE U STAMP PLATE TO BE LOCATED ON VACUUM VESSEL.
   MATERIALS = 304 STAINLESS STEEL EXCEPT AS INDICATED.

2. FOR ITEMS 1 & 2, THE ACTUAL WALL THICKNESS AND NOZZLE REINFORCEMENTS MUST BE AS REQUIRED BY ASME BOILER AND PRESSURE VESSEL CODE. REFER TO PRINT MC-489652 FOR NOZZLE FORCES AND BENDING MOMENTS ON NOZZLES

3. ANGULAR ALIGNMENT OF RIBS (ITEM 12) WITH RESPECT TO NOZZLES IS NOT CRITICAL. UPPER & LOWER RIBS DO NOT HAVE TO BE INLINE. RIBS MUST BE PERPENDICULAR TO CORRESPONDING SLOTS AS SHOWN IN SECTION C-C.

REV	DESCRIPTION	DRAWN	DATE
		APPROVED	DATE
A	REVISED & REDRAWN	J. TILLMAN	08-MAR-2012
		J. RAUCH	27-APR-2012

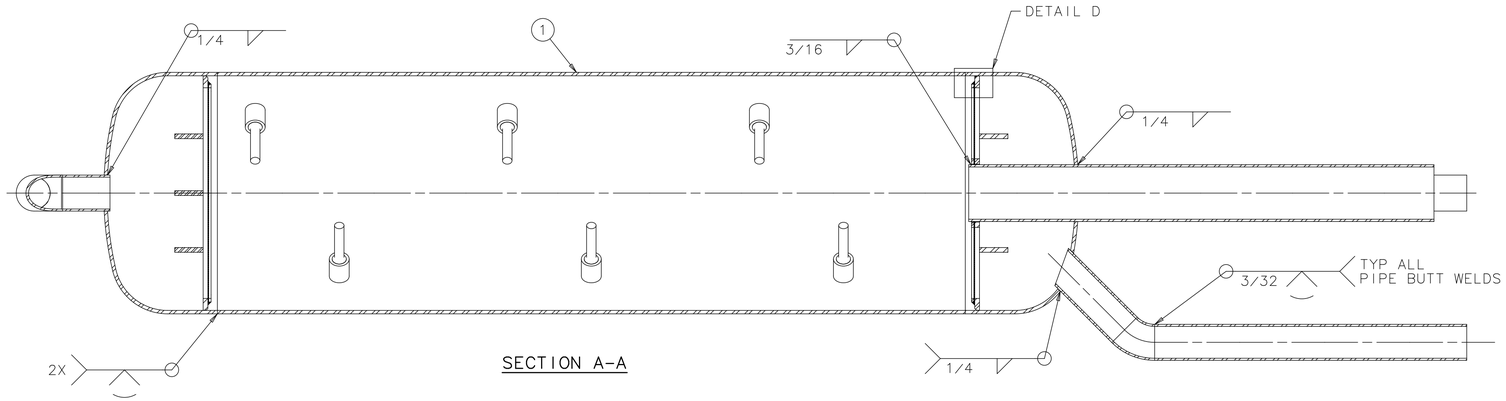

SECTION A-A

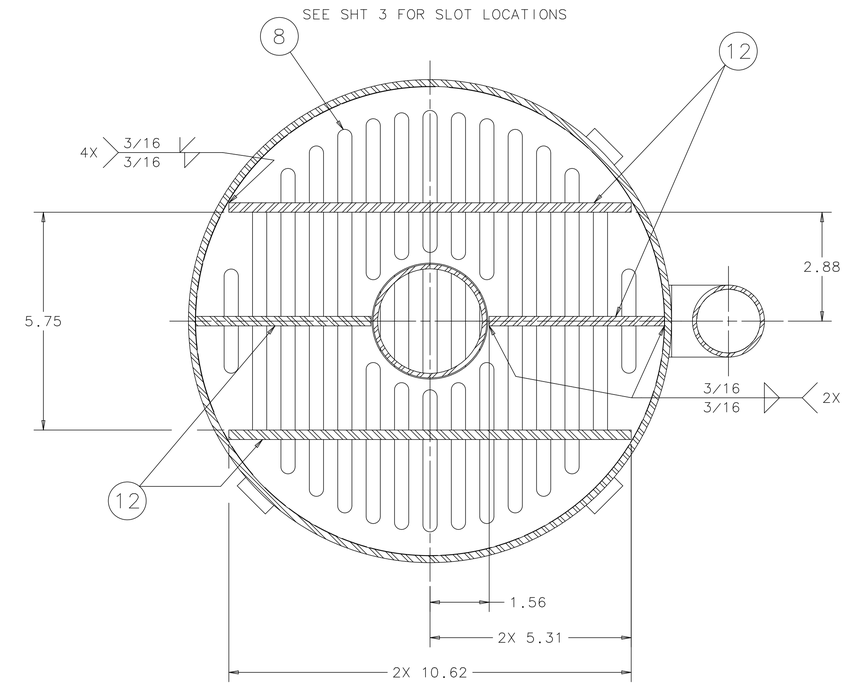

SECTION C-C
SCALE: 1:2

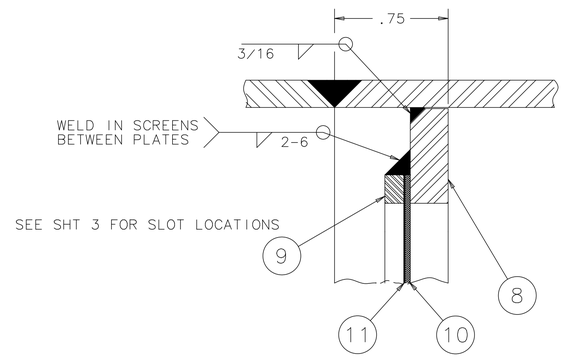

DETAIL D
SCALE: 2:1

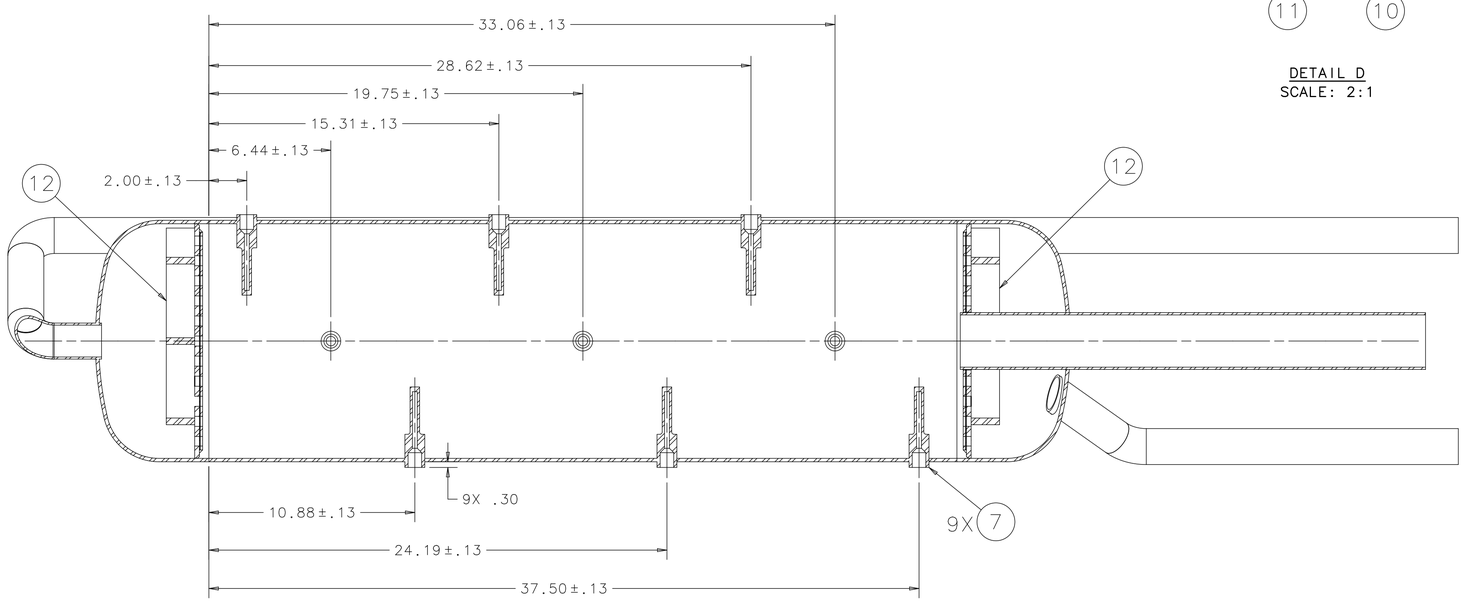

SECTION B-B

UNLESS OTHERWISE SPECIFIED			ORIGINATOR	R.SANDERS	25-JUN-2010
.XX	.XXX	ANGLES	DRAWN	J.MATESKI	25-JUN-2010
± .06	± .015	± 1°	CHECKED	J.RAUCH	30-JUL-2010
			APPROVED	R.SANDERS	02-AUG-2010

1. BREAK ALL SHARP EDGES .015 MAX.
2. DO NOT SCALE DRAWING.
3. DIMENSIONS BASED UPON ASME Y14.5M-1994
4. MAX. ALL MACH. SURFACES 250
5. DRAWING UNITS: U.S. INCH

USED ON: MD-489563

MATERIAL: SEE PARTS LIST ON SHEET 1

FERMI NATIONAL ACCELERATOR LABORATORY
UNITED STATES DEPARTMENT OF ENERGY

E974-MICROBOONE - INFRASTRUCTURE SERVICE EQUIPMENT MICROBOONE FILTER INNER VESSEL

SCALE	DRAWING NUMBER	SHEET	REV
1:4 & AS NOTED	3974.220-MD-486036	2 OF 3	A

CREATED WITH : Ideas12NXSeries | GROUP: PPD/MECHANICAL DEPARTMENT

REV	DESCRIPTION	DRAWN	DATE
		APPROVED	DATE
A	REVISED & REDRAWN	J. TILLMAN	08-MAR-2012
		J. RAUCH	27-APR-2012

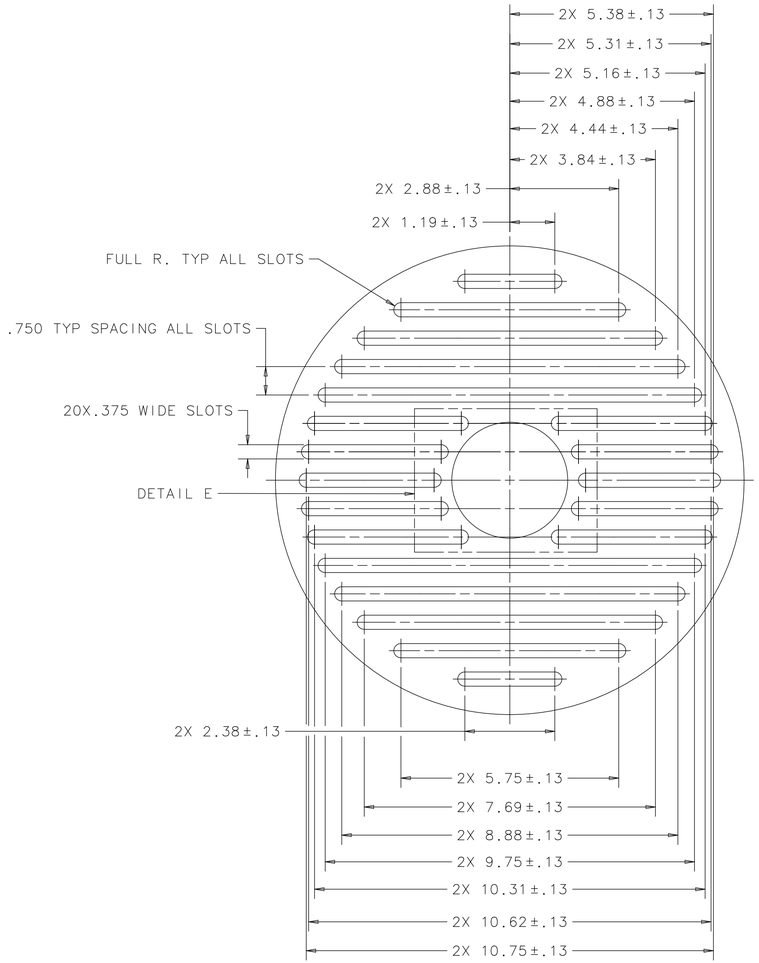

TYPICAL SLOT DETAIL
ITEM 8 & 9

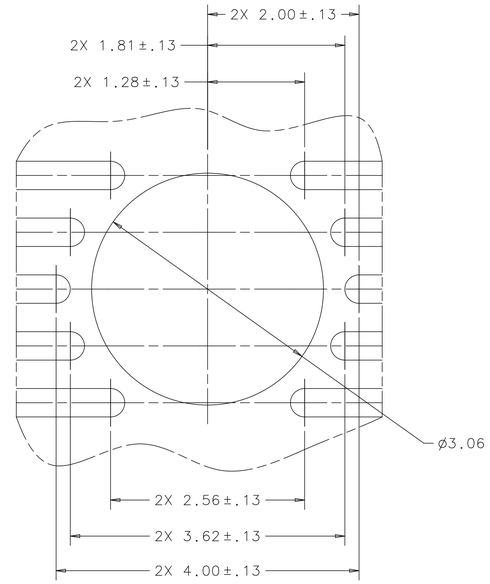

DETAIL E
SCALE: 1:1
(UPPER PLATES & SCREENS ONLY)

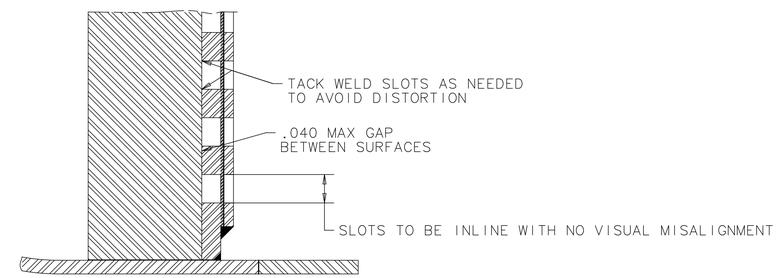

SECTION F-F
SCALE: 1:1
(TYPICAL ALL PLATES & SCREENS)

UNLESS OTHERWISE SPECIFIED			ORIGINATOR	R.SANDERS	25-JUN-2010
.XX	.XXX	ANGLES	DRAWN	J.MATESKI	25-JUN-2010
± .06	± .015	± 1°	CHECKED	J.RAUCH	30-JUL-2010
1. BREAK ALL SHARP EDGES .015 MAX. 2. DO NOT SCALE DRAWING. 3. DIMENSIONS BASED UPON ASME Y14.5M-1994 4. MAX. ALL MACH. SURFACES 250 5. DRAWING UNITS: U.S. INCH			APPROVED	R.SANDERS	02-AUG-2010
			USED ON	MD-489563	
			MATERIAL	SEE PARTS LIST ON SHEET 1	

FERMI NATIONAL ACCELERATOR LABORATORY
UNITED STATES DEPARTMENT OF ENERGY

E974-MICROBOONE - INFRASTRUCTURE
SERVICE EQUIPMENT
MICROBOONE FILTER INNER VESSEL

SCALE	DRAWING NUMBER	SHEET	REV
1:4 & AS NOTED	3974.220-MD-486036	3 OF 3	A

CREATED WITH : Ideas12NXSeries | GROUP: PPD/MECHANICAL DEPARTMENT