REV	DESCRIPTION	DRAWN	DATE
		APPROVED	DATE

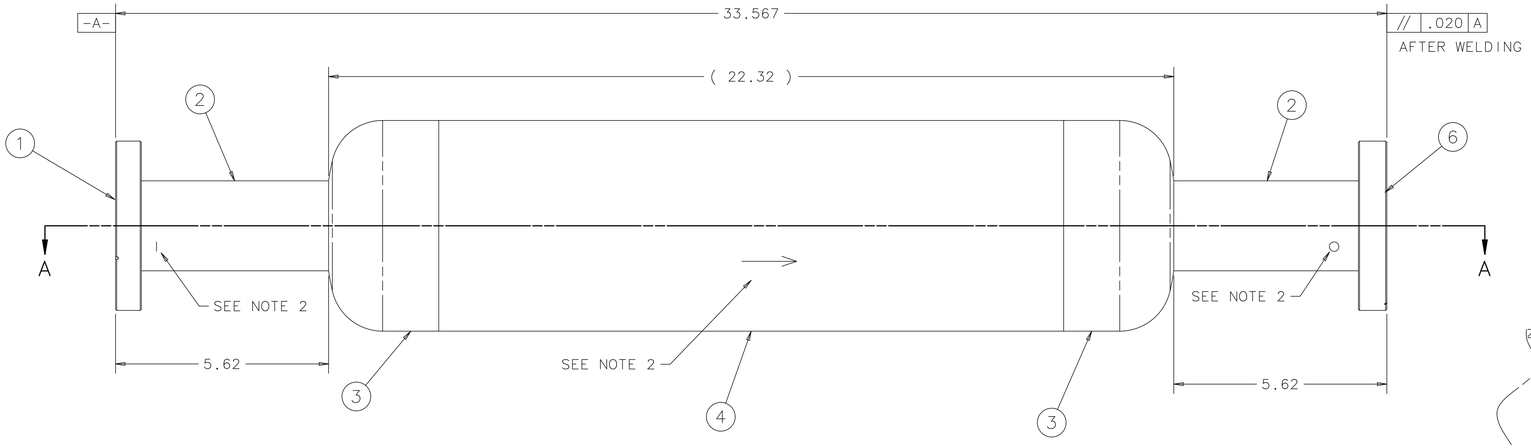

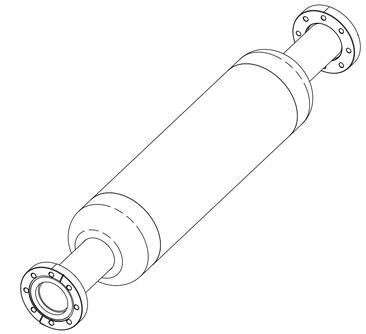

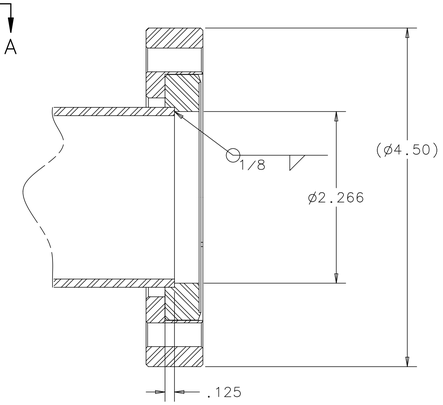

DETAIL B
SCALE: 1:1
(TYPICAL BOTH ENDS)

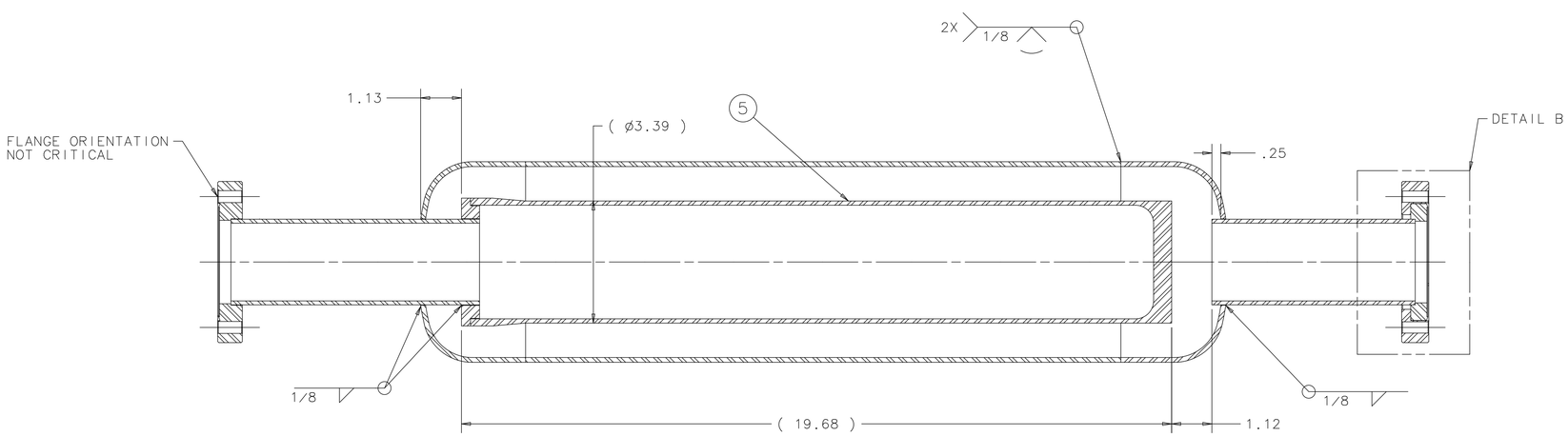

SECTION A-A
SCALE: 1:2

NOTES:

1. ALL CONTINUOUS WELDS TO BE VACUUM TIGHT
2. INDICATE FLOW DIRECTION WITH A LETTER "I" FOR INLET & "O" FOR OUTLET WITH 1/4" LETTER HEIGHT INDENTING STAMP OR AN ARROW IN CENTER OF ITEM 4 AS SHOWN.

ITEM	PART NO.	DESCRIPTION OR SIZE	QTY.
6	COML	FLANGE, 4-1/2" DEL SEAL BLANK ROTATABLE WITH THRU HOLES; BORED	1
5	COML	SINTERED METAL FILTER GKN: 9122/5; SIKA-R 5 IS SUPPLIED BY FERMI LAB	1
4	COML	PIPE; 5" SCH10 304SS	1
3	COML	PIPE CAP; 5" SCH10 304SS	2
2	COML	PIPE; 2" SCH10 304SS LENGTH TO SUIT	2
1	COML	FLANGE, 4-1/2" DEL SEAL BLANK FIXED WITH THRU HOLES; BORED	1

PARTS LIST

UNLESS OTHERWISE SPECIFIED			ORIGINATOR	J.KILMER	09-FEB-2012
.XX	.XXX	ANGLES	DRAWN	J.TILLMAN	29-FEB-2012
± .06	± .030	± ---	CHECKED	J.RAUCH	27-APR-2012
			APPROVED	R.SANDERS	27-APR-2012

1. BREAK ALL SHARP EDGES .015 MAX.
2. DO NOT SCALE DRAWING.
3. DIMENSIONS BASED UPON ASME Y14.5M-1994
4. MAX. ALL MACH. SURFACES 125
5. DRAWING UNITS: U.S. INCH

USED ON: ME-489577

MATERIAL: SEE PARTS LIST ABOVE

FERMI NATIONAL ACCELERATOR LABORATORY
UNITED STATES DEPARTMENT OF ENERGY

E974-MICROBOONE - INFRASTRUCTURE SERVICE EQUIPMENT MICROBOONE SINTERED METAL FILTER

SCALE	DRAWING NUMBER	SHEET	REV
1:2 & AS NOTED	3974.220-MD-489570	1 OF 1	

CREATED WITH : Ideas12NXSeries | GROUP: PPD/MECHANICAL DEPARTMENT