REV	DESCRIPTION	DRAWN / APPROVED	DATE / DATE
A	GENERAL REVISIONS	J. TILLMAN	26-JUL-2012
		M. ZUCKERBROT	01-AUG-2012
B	UPDATED TO AS BUILT	J.RAUCH	28-FEB-2013
		R.SANDERS	03-MAR-2013

NOTES:

1. HELIUM LEAK TEST ALL PIPE, PRESSURE VESSEL AND VACUUM WELDS TO 1 X 10^{-9}ATM-CC HE/SEC

2. WELD ALL ARGON PIPING IN ACCORDANCE WITH ASME B31.3 FOR NORMAL FLUID SERVICE. ALL WELDING SHALL BE DONE BY ARGON SHIELD, FUSING ARC PROCESS. VENDOR DETERMINES SEQUENCE OF WELDING TO MINIMIZE DISTORTION AND ASSUMES RESPONSIBILITY FOR STRESS RELIEVING AND STRAIGHTENING. WELDING SHALL BE INSPECTED ACCORDING TO ASME B31.3. SECTION 344.

3. (A) ALL PROCESS PIPING WITHIN VACUUM JACKET SHALL BE WRAPPED WITH 25 - 30 MM OF PYROGEL XT (ITEM 63) AS SPACE & QUANTITIES PERMIT. INSULATION MATERIALS SHALL NOT PLUG OR BLOCK ANY PUMP OUT PORT OR VACUUM RELIEF PORT.

4. SECURE ALL UNSUPPORTED PIPES & VALVES TO FILTER SKID FRAME WITH TEMPORARY RESTRAINTS FOR SHIPPING.

5. COVER & PROTECT ALL EXPOSED VALVE OPENINGS AT ALL TIMES TO ENSURE THAT NO FOREIGN MATERIAL IS ABLE TO PENETRATE THE VALVE.

6. (B) ALL NPT CONECTIONS ARE TO BE SEALED WITH ITEM NO 68 TO ITEMS 8,9 AND 65.

7. (A)(B) FOR ITEMS 3,4 & 64 USE ITEM 67 AS TEMPORARY FILLER FOR SHIPPING.

8. ESTIMATED WEIGHT:
   EMPTY: 2160 LBS
   FULL: 2860 LBS

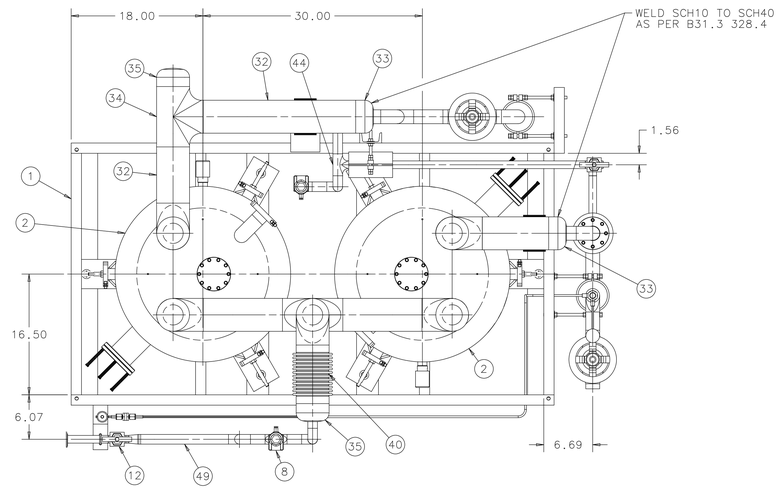

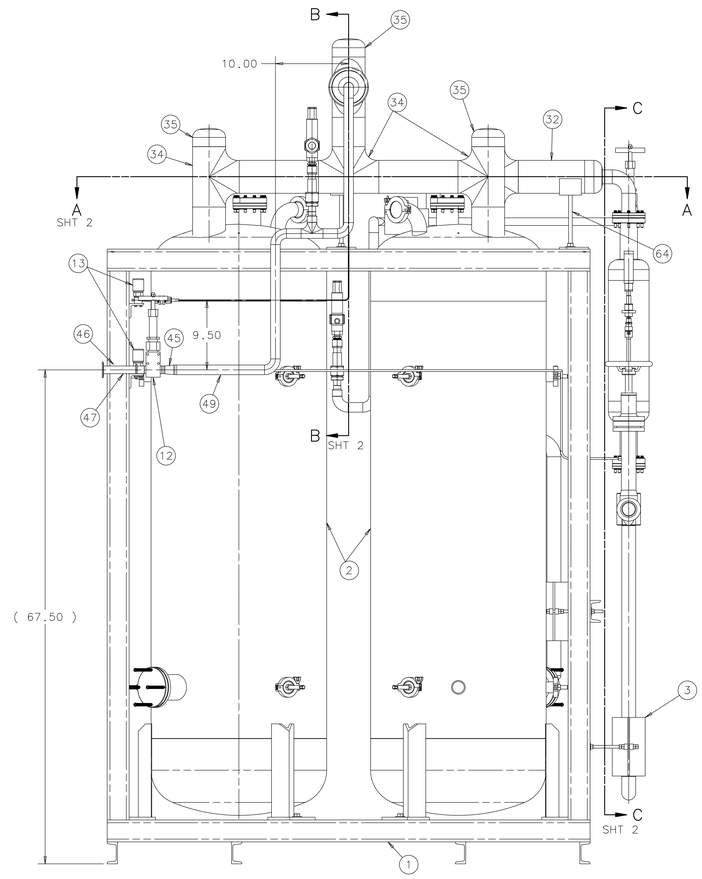

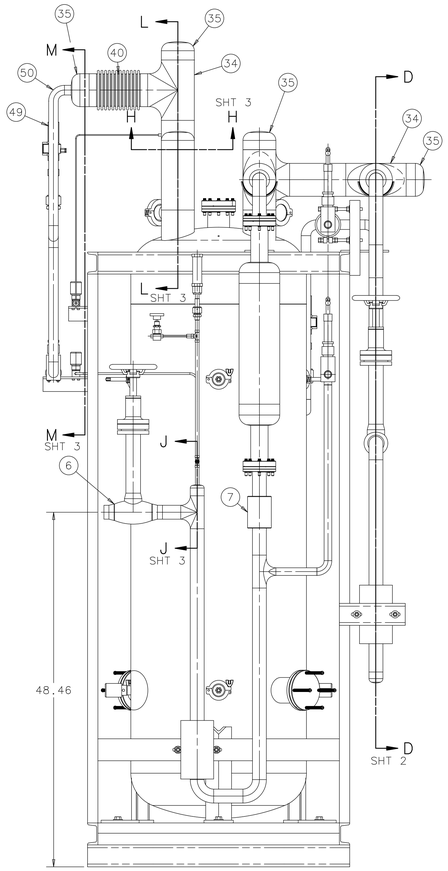

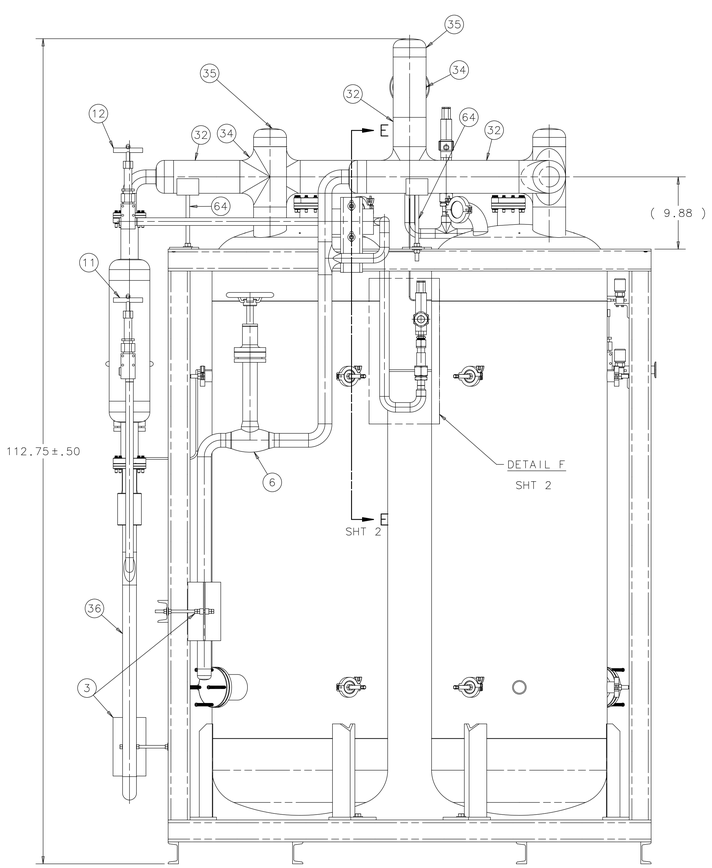

PART LIST CONTINUED ON SHEET 2

ITEM	PART NO.	DESCRIPTION OR SIZE	QTY.
31	COML	FLAT WASHER; 1/2 USS STANDARD MCMASTER CARR; 90108A033	6
30	COML	HEX NUT; 1/2-13 UNC X GR 5 MCMASTER CARR; 95462A033	6
29	COML	CF FLANGE; 4.5 OD FIXED MODIFIED TO ACCEPT A 1.5" PIPE LESKER P/N: F0450X000N	2
28	COML	BOLT/PLATE NUT PACK; 5/16-24X2.0 LESKER P/N: PNB-0450	2
27	COML	CF GASKET; 4.5 O.D. 1/4 HARD CU LESKER P/N: GA-0450	2
26	COML	SHCS; M5-.8 X 10MM LG; SS MCMASTER CARR; 91292A124	8
25	COML	HHCS; 1/2-13 UNC X 1.5 GR 5 MCMASTER CARR; 92865A716	6
24	COML	VCR GLAND; 1/2 T.S.W. 316SS SWAGELOK; SS-8-VCR-3	2
23	COML	VCR FEMALE NUT; 1/2; 316SS SWAGELOK; SS-8-VCR-1	1
22	COML	VCR GASKET; 1/2; 316L SS SWAGELOK; -8-VCR-2-VS	1
21	COML	VCR MALE NUT; 1/2 316SS SWAGELOK; SS-8-VCR-4	1
20	COML	ADAPTER; .5 TUBE X 1/2 NPTF; SS SWAGELOK; SS-8-TA-7-8	1
19	COML	ADAPTER; 1" TUBE X 3/4 NPTF; SS SWAGELOK; SS-16-TA-7-12	2
18	COML	VCR GLAND; 1 T.S.W. 316SS SWAGELOK; SS-16-VCR-3	2
17	COML	VCR FEMALE NUT; 1; 316SS SWAGELOK; SS-16-VCR-1	2
16	COML	VCR GASKET; 1; 316L SS SWAGELOK; -16-VCR-2-VS	2
15	COML	VCR MALE NUT; 1 316SS SWAGELOK; SS-16-VCR-4	2
14	COML	VCR GLAND; 1 T.B.W. 316SS SWAGELOK; SS-16-VCR-3-16MTW	2
13	COML	DIAPHRAM VALVE; .25 TUBE SWAGELOK; 6LVV-DPBW4-P SUPPLIED BY FERMI LAB	2
12	COML	BELLOWS SEALED VALVE; 1" T.B.W. SWAGELOK; SS-12UG-TW-TF SUPPLIED BY FERMI LAB	2
11	COML	BELLOWS VALVE; 1" T.B.W. (90°) SWAGELOK; SS-12UAG-TW-TF SUPPLIED BY FERMI LAB	1
10	COML	BELLOWS SEALED VALVE; .25 T.B.W. SWAGELOK; SS-4BG-TW SUPPLIED BY FERMI LAB	1
9	COML	INLINE REL. VALVE; 1/2 X 1/2 NPT CIRCLE SEAL; 5180B-4MP-60 (A) SUPPLIED BY FERMI LAB	1
8	COML	UV STAMPED VALVE; 1/2" X 3/4" ANDERSON GREENWOOD; 81BM46-4 (A) SUPPLIED BY FERMI LAB	2
7	COML	CHECK VALVE; 1.5 NPS SOCKET WELD CHECKALL; P/N: USJSSMT.500IX (A) SUPPLIED BY FERMI LAB	1
6	COML	CRYOGENIC GLOBE VALVE; 1.5 NPS ACME; P/N: CV-1500-HAROP10-EM (A) SUPPLIED BY FERMI LAB	2
5	MD-489570	FILTER; ARGON NO VAC JKT ASSY	1
4	MC-489582	MCRBN FIL. PIPE INS. SUP. ASSY B	1
3	MC-489580	MCRBN FIL. PIPE INS. SUP. ASSY A	2
2	MD-489597	MICROBOONE FILTER VESSEL	2
1	MD-486016	FILTER SKID FRAME	1

PARTS LIST

UNLESS OTHERWISE SPECIFIED			ORIGINATOR	J.KILMER	29-FEB-2012
.XX	.XXX	ANGLES	DRAWN	J.TILLMAN	02-MAR-2012
± .13	± .020	± 1°	CHECKED	J.RAUCH	27-APR-2012
			APPROVED	R.SANDERS	27-APR-2012

1. BREAK ALL SHARP EDGES .015 MAX.
2. DO NOT SCALE DRAWING.
3. DIMENSIONS BASED UPON ASME Y14.5M-1994
4. MAX. ALL MACH. SURFACES 250
5. DRAWING UNITS: U.S. INCH

USED ON

MATERIAL
SEE PARTS LIST ON SHEET 1 & 2

FERMI NATIONAL ACCELERATOR LABORATORY
UNITED STATES DEPARTMENT OF ENERGY

E974-MICROBOONE - INFRASTRUCTURE SERVICE EQUIPMENT MICROBOONE FILTER SKID

SCALE	DRAWING NUMBER	SHEET	REV
1:8 & AS NOTED	3974.220-ME-489577	1 OF 5	B

CREATED WITH : Ideas12NXSeries GROUP: PPD/MECHANICAL DEPARTMENT

REV	DESCRIPTION	DRAWN / APPROVED	DATE / DATE
A	GENERAL REVISIONS	J. TILLMAN	26-JUL-2012
		M. ZUCKERBROT	01-AUG-2012
B	UPDATED TO AS BUILT	J.RAUCH	28-FEB-2013
		R.SANDERS	03-MAR-2013

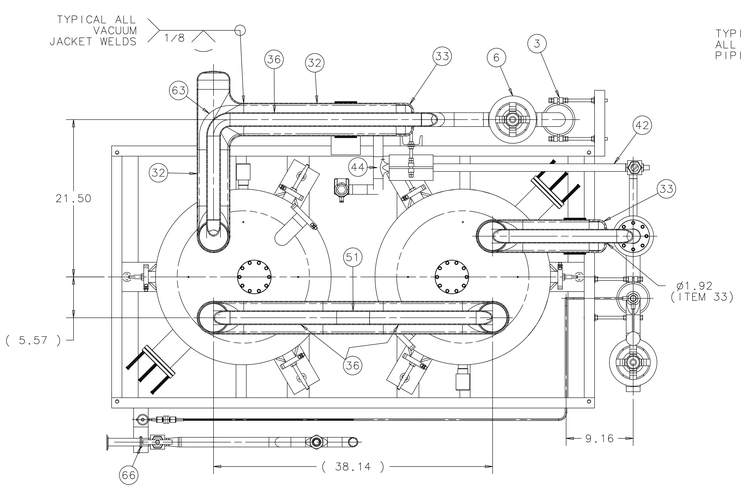

SECTION A-A

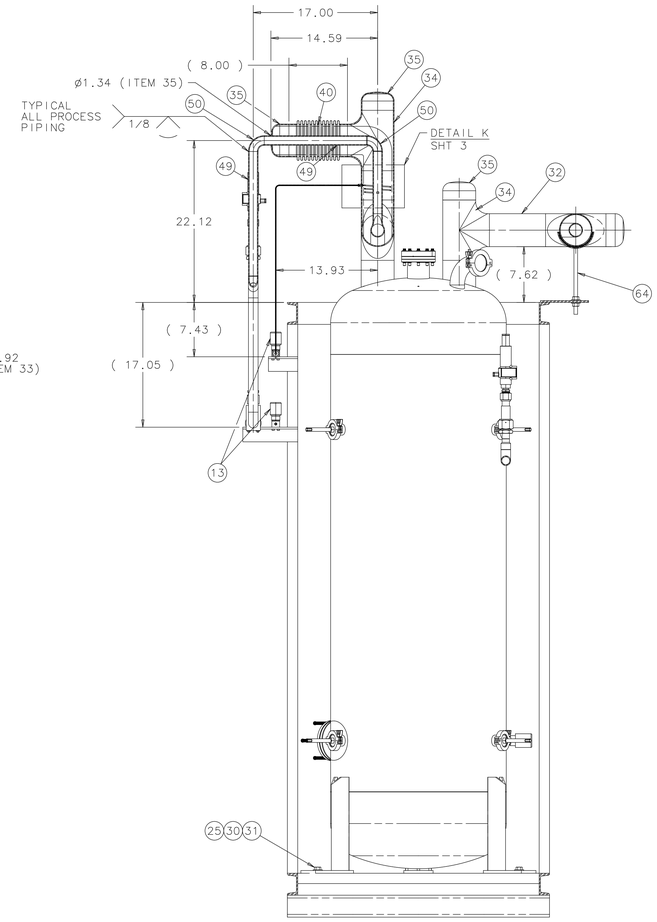

SECTION B-B

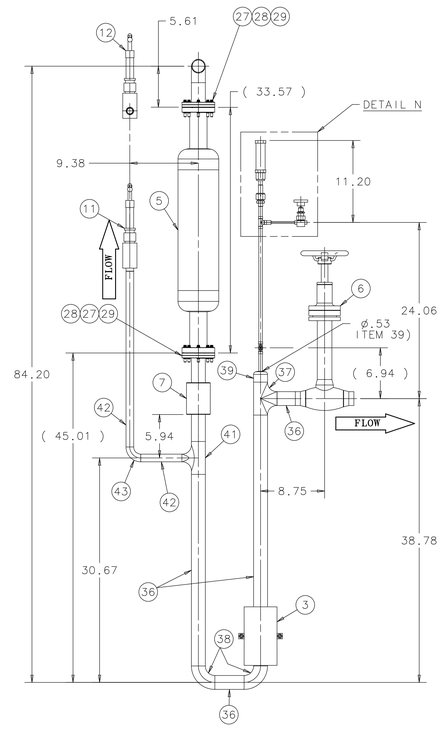

SECTION C-C

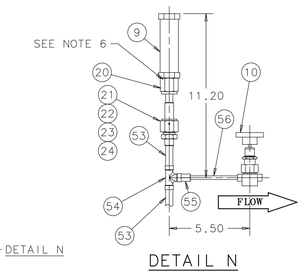

DETAIL N
SCALE: 1:4

PART LIST CONTINUED ON SHEET 3

ITEM	PART NO.	DESCRIPTION OR SIZE	QTY.
63	COML	PYROGEL XT; SHEET VENDOR: ASPEN AEROGELS SUPPLIED BY FERMI LAB	A.R.
62	COML	INLINE FIL.;1/4 MALE VCR; 7 MIC SWAGELOK P/N: SS-4FW-VCR-7 SUPPLIED BY FERMI LAB	1
61	COML	VCR GLAND; T.B.W. 316 SS SWAGELOK P/N: 6LV-4-VCR-3-4TB3	1
60	COML	VCR GASKET; 1/4; 316L SS SWAGELOK; -4-VCR-2	2
59	COML	VCR FEMALE NUT; 1/4; 316SS SWAGELOK; SS-4-VCR-1	2
58	COML	VCR GLAND; REDUCING T.S.W. 316 SS SWAGELOK P/N: SS-4-VCR-3-2TSW	1
57	COML	TUBE; .125 OD X .035 WALL; 304SS LENGTH TO SUIT	1
56	COML	TUBE; .25 OD X .035 WALL; 304SS LENGTH TO SUIT	2
55	COML	TUBE ADAPTER; .50 TBW X .25 TSW SWAGELOK P/N: SS-8-MTW-A-4TSW	2
54	COML	BRAZETYTE TEE; .50 OD FEMALE MICROGROUP P/N: 30 FF-8	2
53	COML	TUBE; .50 OD X .035 WALL; 304SS LENGTH TO SUIT	4
52	COML	TEE; 1 SCH 10; 304SS	1
51	COML	REDUCING TEE; 1-1/2" NPS X 1" NPS; 304SS	2
50	COML	ELBOW; 90° LR; 1 SCH10; 304SS	10
49	COML	PIPE; 1 SCH10; 304SS LENGTH TO SUIT	12
48	COML	1.0 TUBE TO 1" PIPE ADAPTER 304SS	2
47	COML	TUBE; 1 OD X .035 WALL X 4.0 LONG; 304SS	1
46	COML	FLANGE; KF40 304LSS (MODIFIED) LESKER P/N: QF40-100-SBB	1
45	COML	CONCENTRIC REDUCER; 1" X 3/4" SCH 10; 304 SS	1
44	COML	REDUCING TEE; 1" X 3/4" SCH10; 304SS	1
43	COML	ELBOW; 90° LR; 3/4 SCH10; 304SS	6
42	COML	PIPE; 3/4" SCH10; 304SS LENGTH TO SUIT	3
41	COML	REDUCING TEE; 1-1/2 X 3/4 SCH10; 304SS (SEE SECT C:C)	1
40	COML	EXPANSION JOINT HOSEMASTER P/N: EJ-522395 SUPPLIED BY FERMI LAB	1
39	COML	PIPE CAP; 1-1/2 SCH10; 304SS	2
38	COML	ELBOW; 90° LR; 1-1/2 SCH10; 304SS	11
37	COML	STRAIGHT TEE; 1-1/2" SCH10; 304SS	1
36	COML	PIPE; 1-1/2" SCH10; 304SS LENGTH TO SUIT	16
35	COML	PIPE CAP; 4" SCH10; 304SS	7
34	COML	STRAIGHT TEE; 4" SCH10; 304SS	7
33	COML	PIPE CAP; 4" SCH40; 304SS	2
32	COML	PIPE; 4" SCH10; 304SS LENGTH TO SUIT	6

PARTS LIST

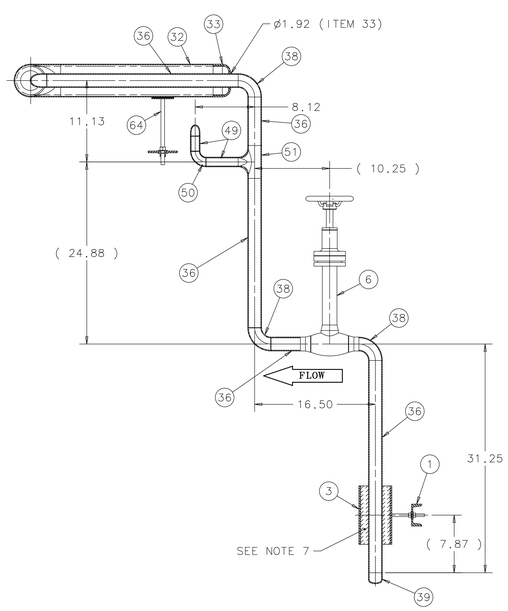

SECTION D-D

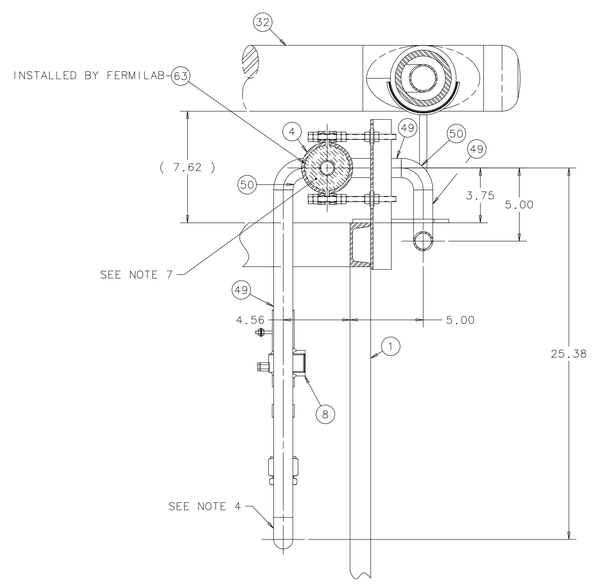

SECTION E-E
SCALE: 1:4
SOME ITEMS NOT SHOWN FOR CLAIRITY

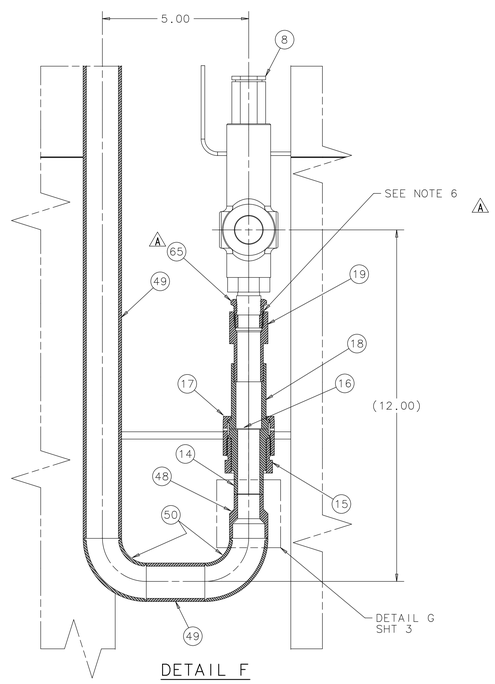

DETAIL F
SCALE: 1:2
SOME ITEMS NOT SHOWN FOR CLAIRITY

UNLESS OTHERWISE SPECIFIED			ORIGINATOR	J.KILMER	29-FEB-2012
.XX	.XXX	ANGLES	DRAWN	J.TILLMAN	02-MAR-2012
± .13	± .020	± 1°	CHECKED	J.RAUCH	27-APR-2012
			APPROVED	R.SANDERS	27-APR-2012

1. BREAK ALL SHARP EDGES .015 MAX.
2. DO NOT SCALE DRAWING.
3. DIMENSIONS BASED UPON ASME Y14.5M-1994
4. MAX. ALL MACH. SURFACES 250
5. DRAWING UNITS: U.S. INCH

USED ON

MATERIAL
SEE PARTS LIST ON SHEET 1 & 2

FERMI NATIONAL ACCELERATOR LABORATORY
UNITED STATES DEPARTMENT OF ENERGY

E974-MICROBOONE - INFRASTRUCTURE SERVICE EQUIPMENT MICROBOONE FILTER SKID

SCALE	DRAWING NUMBER	SHEET	REV
1:8 & AS NOTED	3974.220-ME-489577	2 OF 5	B

CREATED WITH : Ideas12NXSeries GROUP: PPD/MECHANICAL DEPARTMENT

REV	DESCRIPTION	DRAWN / APPROVED	DATE / DATE
A	GENERAL REVISIONS	J. TILLMAN / M. ZUCKERBROT	26-JUL-2012 / 01-AUG-2012
B	UPDATED TO AS BUILT	J.RAUCH / R.SANDERS	28-FEB-2013 / 03-MAR-2013

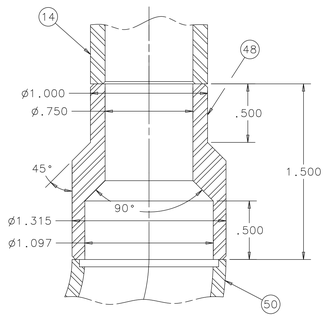

DETAIL G
SCALE: 2:1

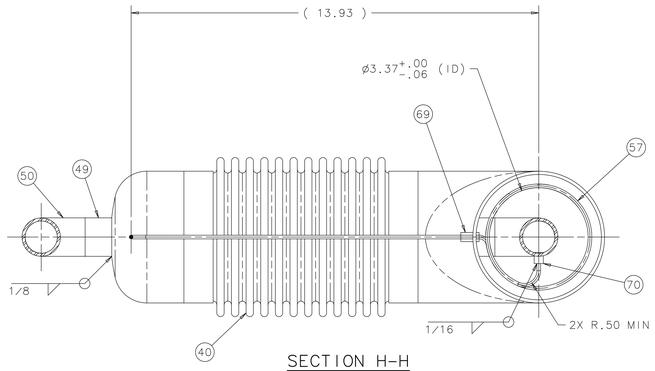

SECTION H-H
SCALE: 1:2

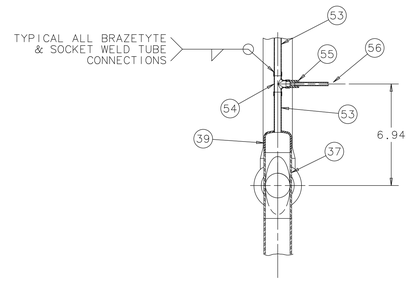

SECTION J-J
SCALE: 1:4

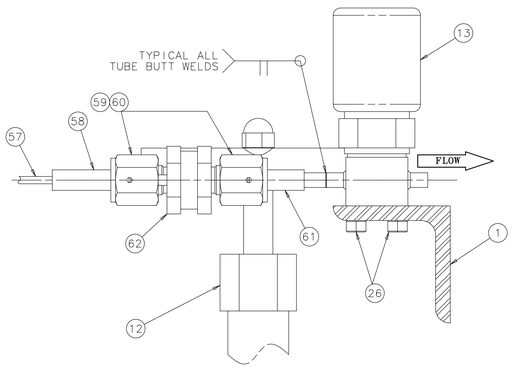

DETAIL P
SCALE: 1:1

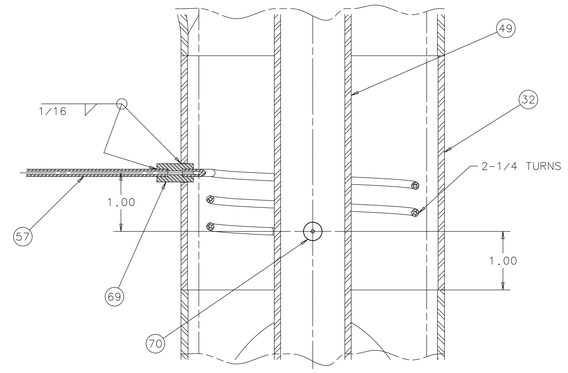

DETAIL K
SCALE: 1:1

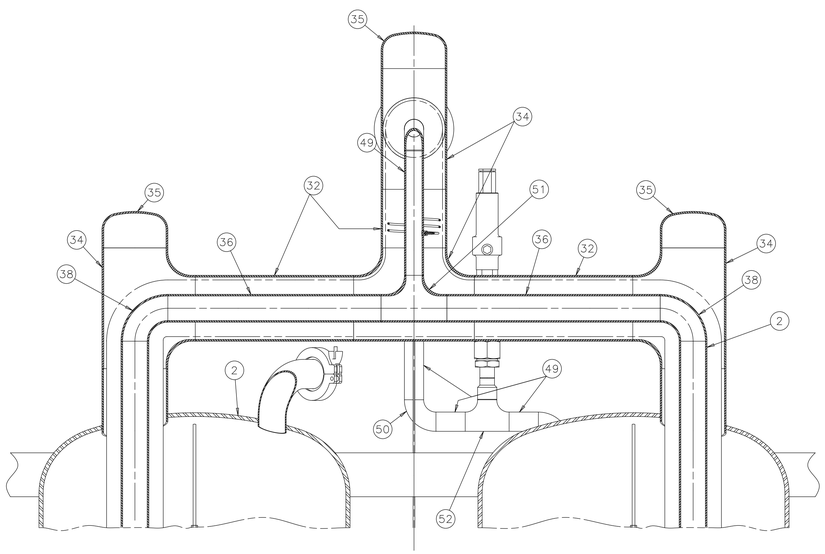

SECTION L-L
SCALE: 1:8

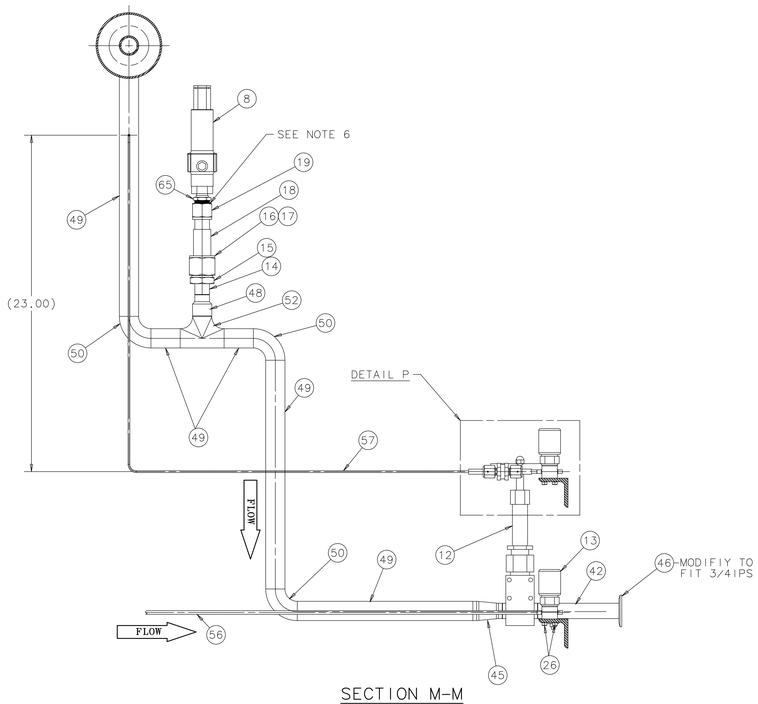

SECTION M-M
SCALE: 1:4

ITEM	PART NO.	DESCRIPTION OR SIZE	QTY.
70	----	HALF UNION-5/160DX3/8LG-1/8TUBE 304SS,SOCKET ONE END, MAKE TO SUIT	1
69	----	UNION-5/160DX5/8LG-1/8TUBE SOC 304SS, BOTH ENDS, MAKE TO SUIT	1
68	COML	STYCAST EPOXY 2850-FT CATALYST 9	A.R.
67	COML	FOAM WRAP-POLYETHYLENE MCMASTER PN-2007T27 OR EQ	A.R.
66	COML	U-BOLT FOR 3/4 PIPE MCMASTER-CARR PN-3043T15	1
65	COML	BUSHING; 1/2" NPT X 3/4" NPT MCMASTER CARR; 4464K271 INSTALLED BY FERMI LAB	2
64	MD-489644	MCRBN FIL. PIPE INS. SUP. ASSY C	2

PARTS LIST

UNLESS OTHERWISE SPECIFIED			ORIGINATOR	J.KILMER	29-FEB-2012
.XX	.XXX	ANGLES	DRAWN	J.TILLMAN	02-MAR-2012
± .13	± .020	± 1°	CHECKED	J.RAUCH	27-APR-2012
			APPROVED	R.SANDERS	27-APR-2012

1. BREAK ALL SHARP EDGES .015 MAX.
2. DO NOT SCALE DRAWING.
3. DIMENSIONS BASED UPON ASME Y14.5M-1994
4. MAX. ALL MACH. SURFACES 250
5. DRAWING UNITS: U.S.INCH

USED ON

MATERIAL
SEE PARTS LIST ON SHEET 1 & 2

FERMI NATIONAL ACCELERATOR LABORATORY
UNITED STATES DEPARTMENT OF ENERGY

E974-MICROBOONE - INFRASTRUCTURE SERVICE EQUIPMENT MICROBOONE FILTER SKID

SCALE	DRAWING NUMBER	SHEET	REV
1:8 & AS NOTED	3974.220-ME-489577	3 OF 5	B

CREATED WITH : Ideas12NXSeries GROUP: PPD/MECHANICAL DEPARTMENT

REV	DESCRIPTION	DRAWN / APPROVED	DATE / DATE
A	GENERAL REVISIONS	J. TILLMAN	26-JUL-2012
		M. ZUCKERBROT	01-AUG-2012
B	UPDATED TO AS BUILT	J.RAUCH	28-FEB-2013
		R.SANDERS	03-MAR-2013

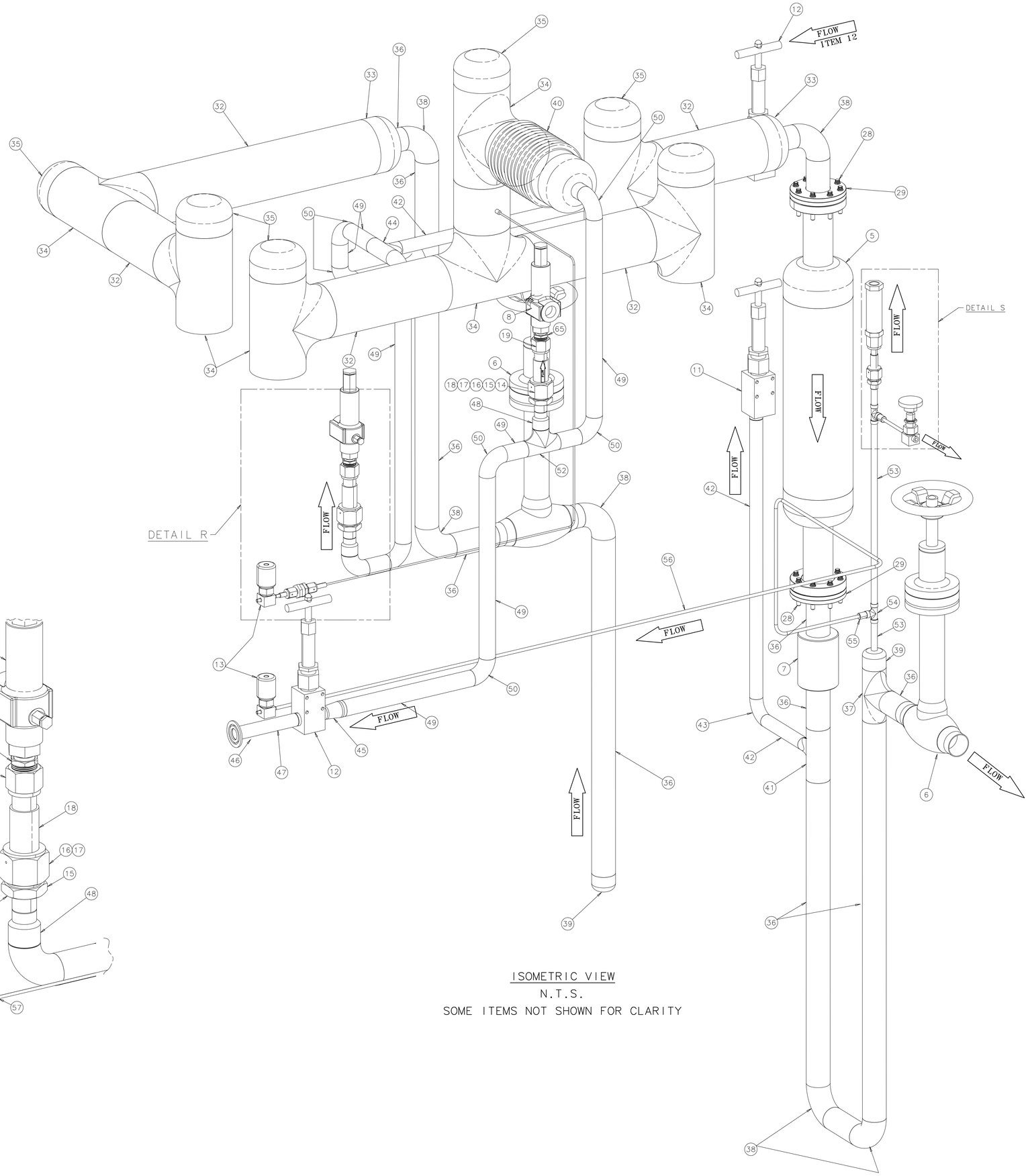

ISOMETRIC VIEW
N.T.S.
SOME ITEMS NOT SHOWN FOR CLARITY

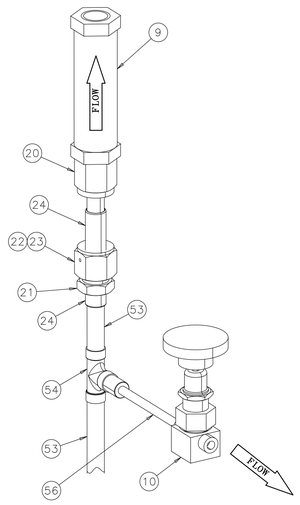

DETAIL S
N.T.S.

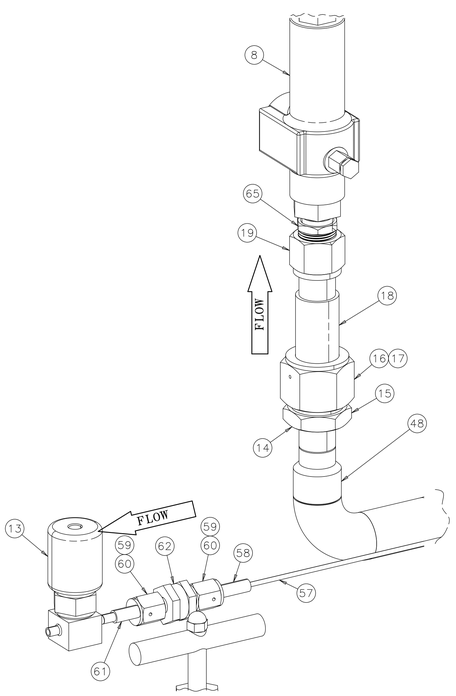

DETAIL R
N.T.S.

UNLESS OTHERWISE SPECIFIED			ORIGINATOR	J.KILMER	29-FEB-2012
.XX	.XXX	ANGLES	DRAWN	J.TILLMAN	02-MAR-2012
± .13	± .020	± 1°	CHECKED	J.RAUCH	27-APR-2012
			APPROVED	R.SANDERS	27-APR-2012

1. BREAK ALL SHARP EDGES .015 MAX.
2. DO NOT SCALE DRAWING.
3. DIMENSIONS BASED UPON ASME Y14.5M-1994
4. MAX. ALL MACH. SURFACES 250
5. DRAWING UNITS: U.S.INCH

USED ON

MATERIAL
SEE PARTS LIST ON SHEET 1 & 2

FERMI NATIONAL ACCELERATOR LABORATORY
UNITED STATES DEPARTMENT OF ENERGY

E974-MICROBOONE - INFRASTRUCTURE SERVICE EQUIPMENT
MICROBOONE FILTER SKID

SCALE	DRAWING NUMBER	SHEET	REV
1:8 & AS NOTED	3974.220-ME-489577	4 OF 5	B

CREATED WITH : Ideas12NXSeries GROUP: PPD/MECHANICAL DEPARTMENT

REV	DESCRIPTION	DRAWN / APPROVED	DATE / DATE
A	GENERAL REVISIONS	J. TILLMAN	26-JUL-2012
		M. ZUCKERBROT	01-AUG-2012
B	UPDATED TO AS BUILT	J.RAUCH	28-FEB-2013
		R.SANDERS	03-MAR-2013

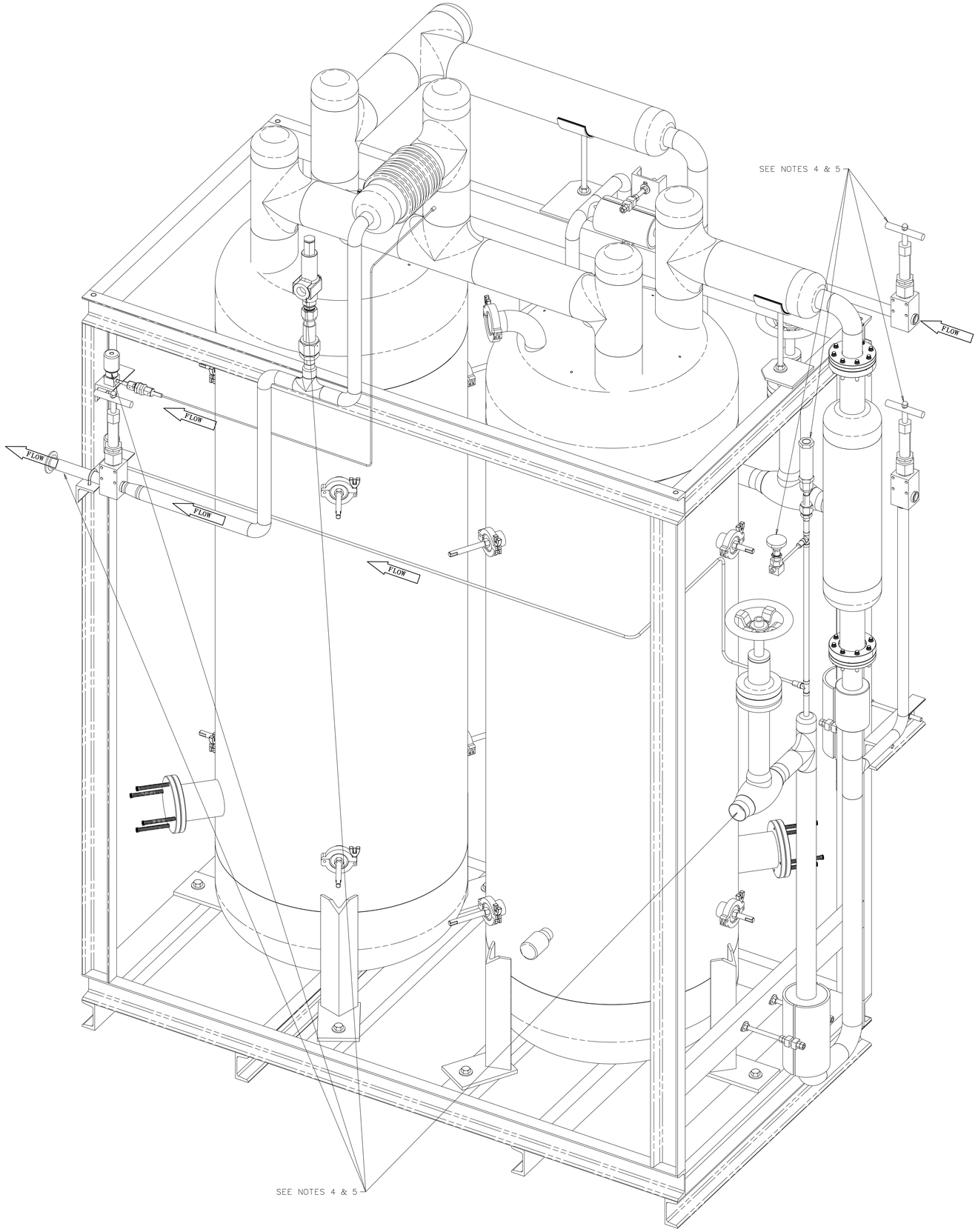

ISOMETRIC VIEW
N.T.S.

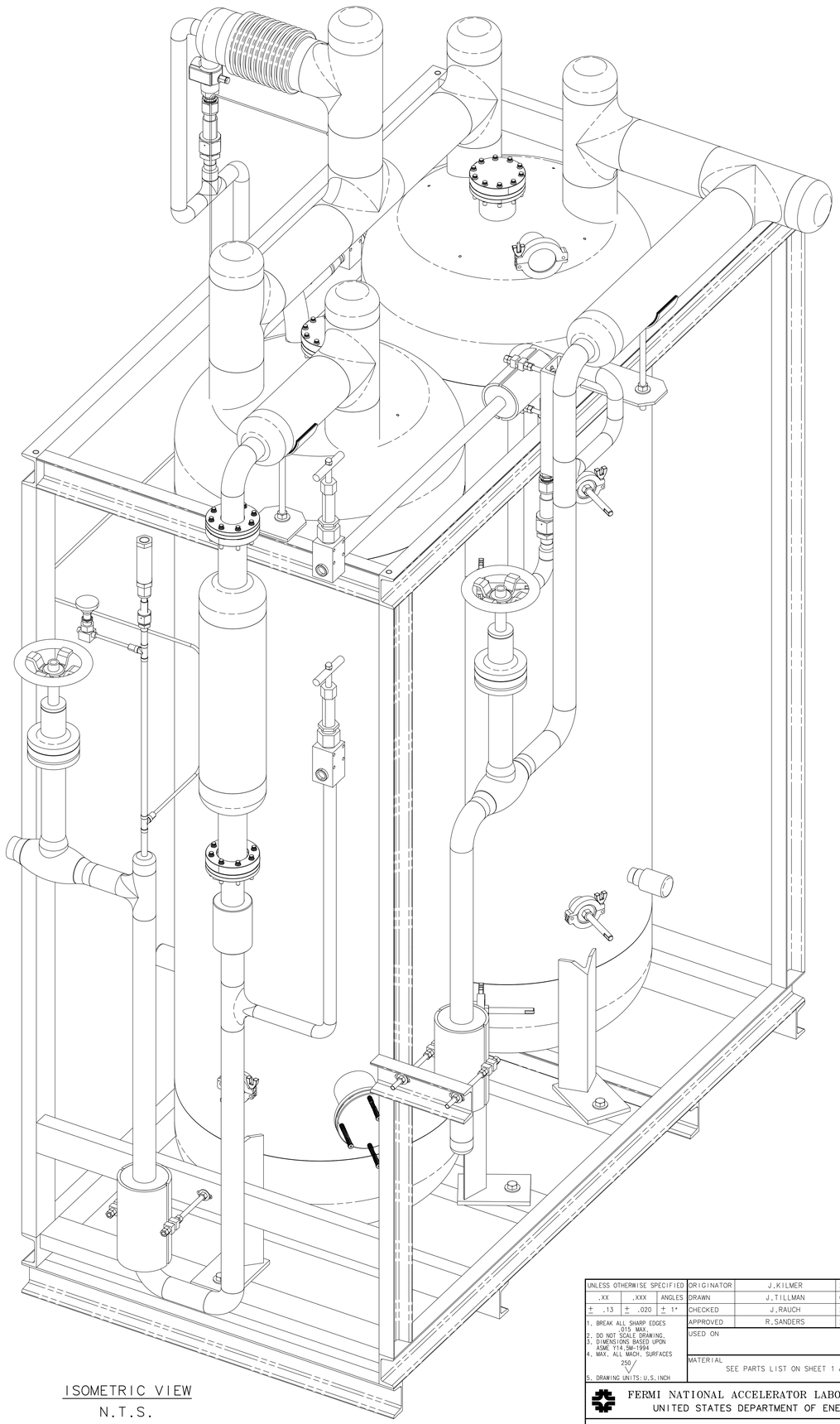

ISOMETRIC VIEW
N.T.S.

UNLESS OTHERWISE SPECIFIED			ORIGINATOR	J.KILMER	29-FEB-2012
.XX	.XXX	ANGLES	DRAWN	J.TILLMAN	02-MAR-2012
± .13	± .020	± 1°	CHECKED	J.RAUCH	27-APR-2012
			APPROVED	R.SANDERS	27-APR-2012

1. BREAK ALL SHARP EDGES .015 MAX.
2. DO NOT SCALE DRAWING.
3. DIMENSIONS BASED UPON ASME Y14.5M-1994
4. MAX. ALL MACH. SURFACES 250
5. DRAWING UNITS: U.S. INCH

USED ON

MATERIAL
SEE PARTS LIST ON SHEET 1 & 2

FERMI NATIONAL ACCELERATOR LABORATORY
UNITED STATES DEPARTMENT OF ENERGY

E974-MICROBOONE - INFRASTRUCTURE SERVICE EQUIPMENT MICROBOONE FILTER SKID

SCALE	DRAWING NUMBER	SHEET	REV
1:8 & AS NOTED	3974.220-ME-489577	5 OF 5	B

CREATED WITH : Ideas12NXSeries GROUP: PPD/MECHANICAL DEPARTMENT