REV	DESCRIPTION	DRAWN	DATE
		APPROVED	DATE

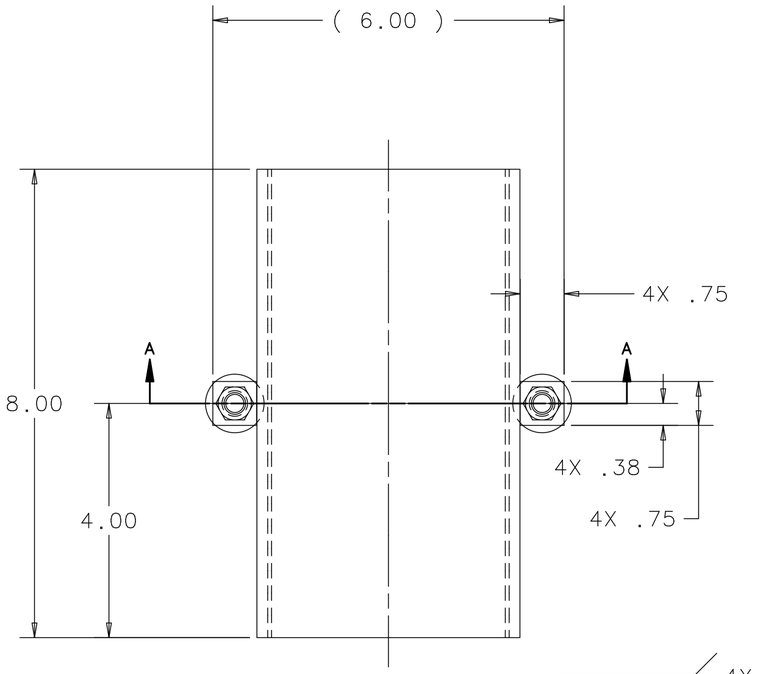

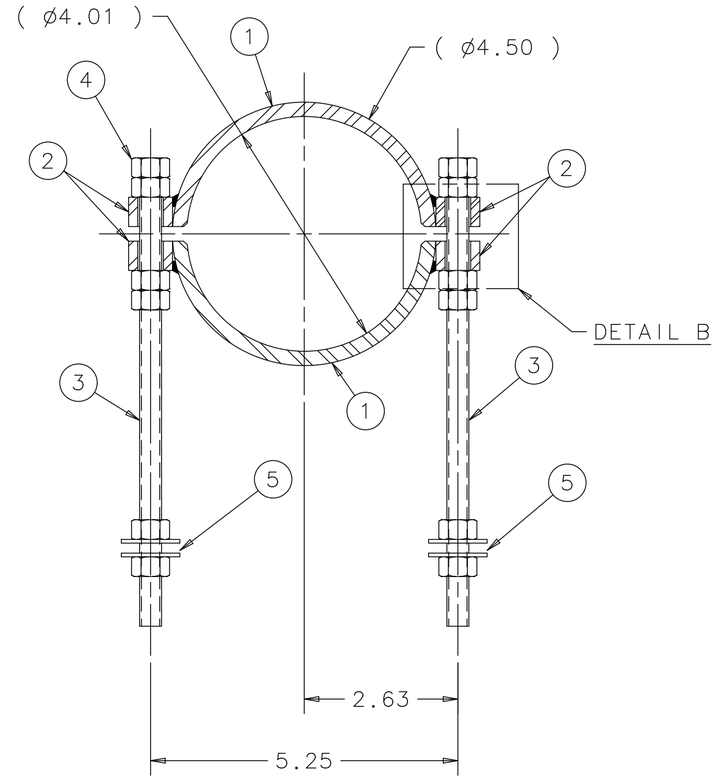

SECTION A-A

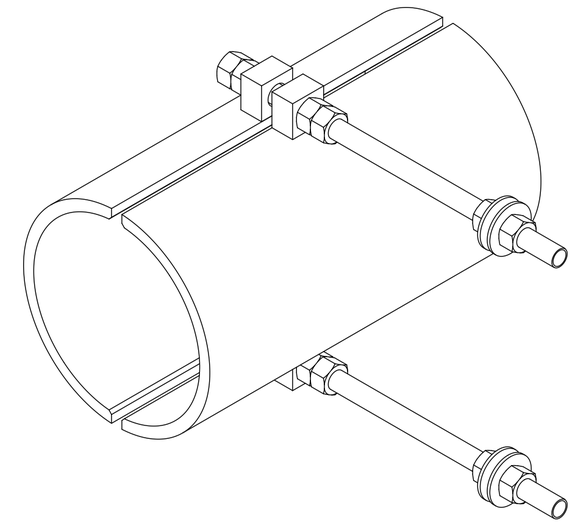

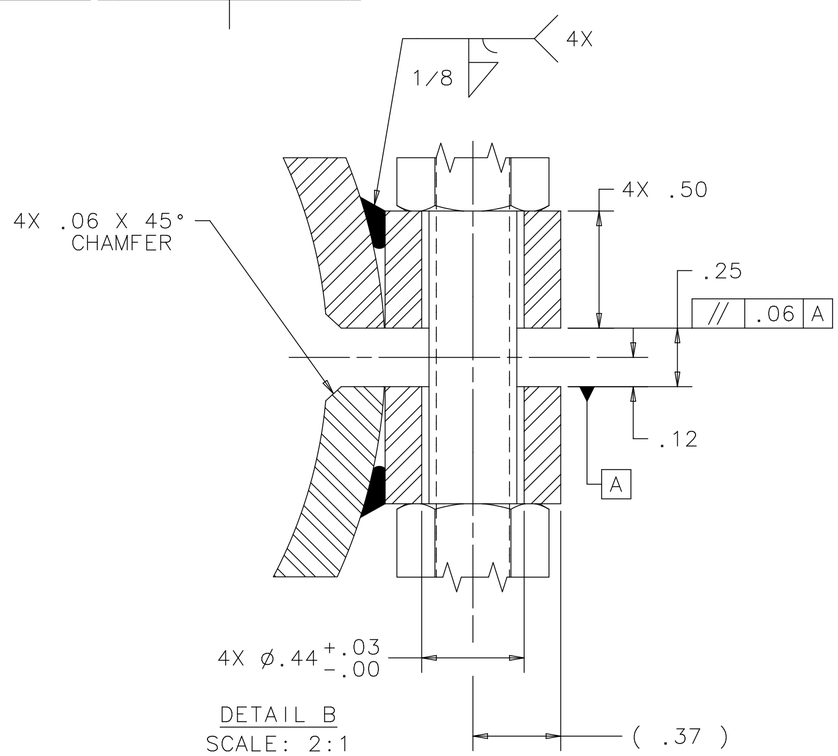

DETAIL B
SCALE: 2:1
TYPICAL BOTH SIDES

NOTES:

1. APPROXIMATE WEIGHT: 10 LBS.

ITEM	PART NO.	DESCRIPTION OR SIZE	QTY.
5	COML	FLAT WASHER; 3/8" 316 SS MCMASTER CARR: 90107A051	4
4	COML	HEX NUT; 3/8-16 UNC 18-8SS MCMASTER CARR: 91845A031	12
3	COML	THREADED ROD; 3/8-16 UNC X 8.00 LG 18-8SS MCMASTER CARR: 95412A650	2
2	COML	EAR, .75 X .75 X .50 304 SS	4
1	COML	PIPE, 4" SCH40 X 8" LG 304 SS	1

PARTS LIST

UNLESS OTHERWISE SPECIFIED			ORIGINATOR	R.SANDERS	29-FEB-2012
.XX	.XXX	ANGLES	DRAWN	J.TILLMAN	07-MAR-2012
± .13	± ---	± ---	CHECKED	J.RAUCH	27-APR-2012
			APPROVED	R.SANDERS	27-APR-2012

1. BREAK ALL SHARP EDGES .02 MAX.
2. DO NOT SCALE DRAWING.
3. DIMENSIONS BASED UPON ASME Y14.5M-1994
4. MAX. ALL MACH. SURFACES 250
5. DRAWING UNITS: U.S. INCH

USED ON: ME-489577

MATERIAL: SEE PARTS LIST ABOVE

FERMI NATIONAL ACCELERATOR LABORATORY
UNITED STATES DEPARTMENT OF ENERGY

E974-MICROBOONE - INFRASTRUCTURE SERVICE EQUIPMENT
MCRBN FILTER PIPE INS SUP ASSY A

SCALE	DRAWING NUMBER	SHEET	REV
1:2 & AS NOTED	3974.220-MC-489580	1 OF 1	

CREATED WITH : Ideas12NXSeries | GROUP: PPD/MECHANICAL DEPARTMENT