REV	DESCRIPTION	DRAWN	DATE
		APPROVED	DATE
A	ADDED NOTES	J. TILLMAN	26-JUL-2012
		M. ZUCKERBROT	01-AUG-2012

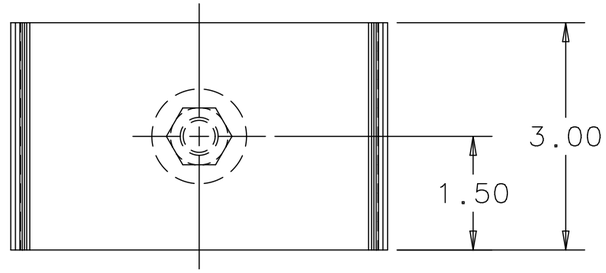

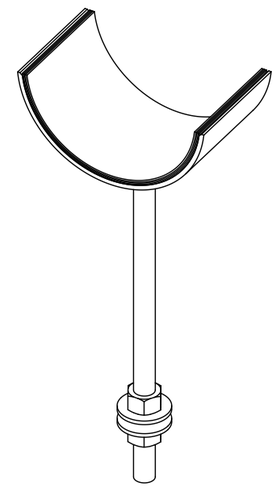

ISOMETRIC VIEW
N.T.S.

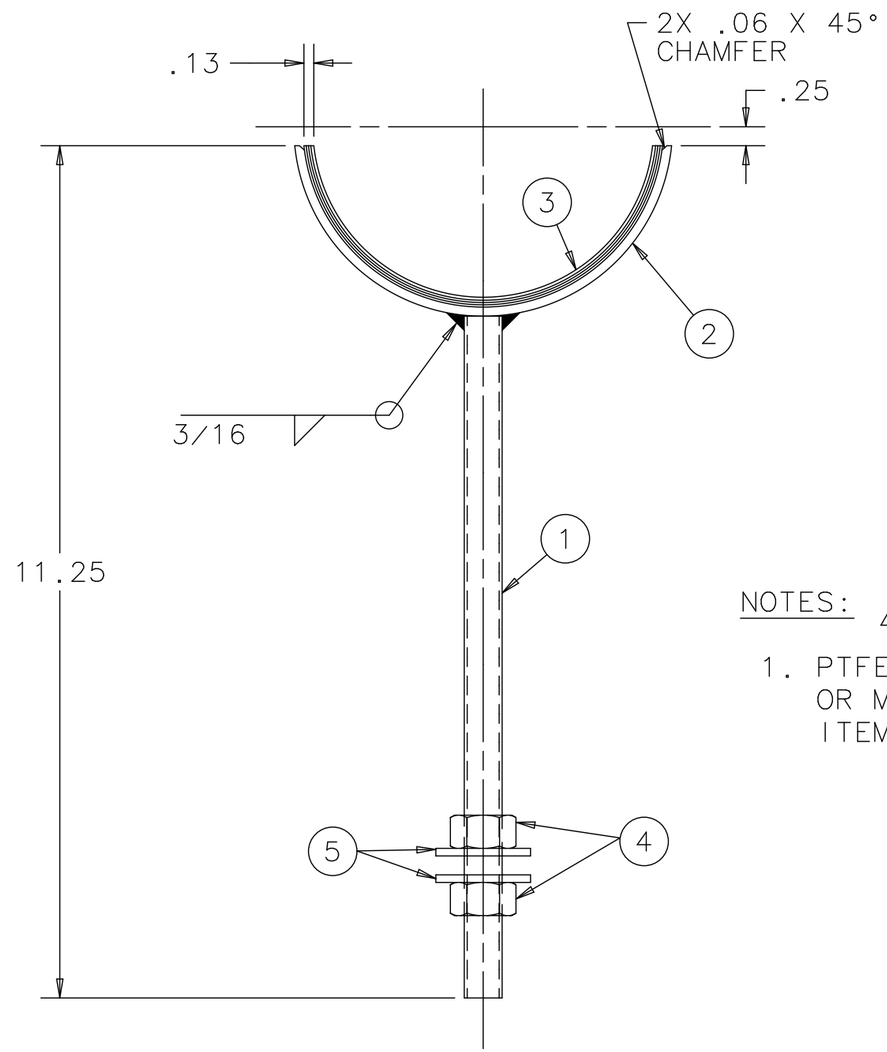

NOTES: (A)

1. PTFE SHEET (ITEM 3) MAY BE SOLID OR MULTILAYER. BOND ALL LAYERS TO ITEM 2 WITH EPOXY (FERMI SUPPLIED)

ITEM	PART NO.	DESCRIPTION OR SIZE	QTY.
5	COML	FLAT WASHER, 1/2 SCREW; USS MCMASTER CARR: 90108A033 OR EQ.	2
4	COML	HEX NUT, 1/2-13UNC MCMASTER CARR: 95462A033 OR EQ.	2
3	COML	PTFE SHEET, .03 THICK MCMASTER CARR PN: 1761T25 OR EQ.	A.R.
2	COML	TUBE; 5.00 OD X .120 WALL STAINLESS STEEL	1
1	COML	THREADED ROD; 1/2-13UNC X 9.00 STAINLESS STEEL	1

PARTS LIST

UNLESS OTHERWISE SPECIFIED			ORIGINATOR	R.SANDERS	10-APR-2012
.XX	.XXX	ANGLES	DRAWN	J.TILLMAN	10-APR-2012
± .06	± ---	± ---	CHECKED	J.RAUCH	27-APR-2012
			APPROVED	R.SANDERS	27-APR-2012

1. BREAK ALL SHARP EDGES .015 MAX.
2. DO NOT SCALE DRAWING.
3. DIMENSIONS BASED UPON ASME Y14.5M-1994
4. MAX. ALL MACH. SURFACES 250
5. DRAWING UNITS: U.S. INCH

USED ON: ME-489577

MATERIAL: SEE PARTS LIST ABOVE

FERMI NATIONAL ACCELERATOR LABORATORY
UNITED STATES DEPARTMENT OF ENERGY

E974-MICROBOONE - INFRASTRUCTURE SERVICE EQUIPMENT FILTER PIPE SUP. ASSY C

SCALE	DRAWING NUMBER	SHEET	REV
1:2 & AS NOTED	3974.220-MB-489644	1 OF 1	A

CREATED WITH : Ideas12NXSeries | GROUP: PPD/MECHANICAL DEPARTMENT