REV	DESCRIPTION	DRAWN	DATE
		APPROVED	DATE

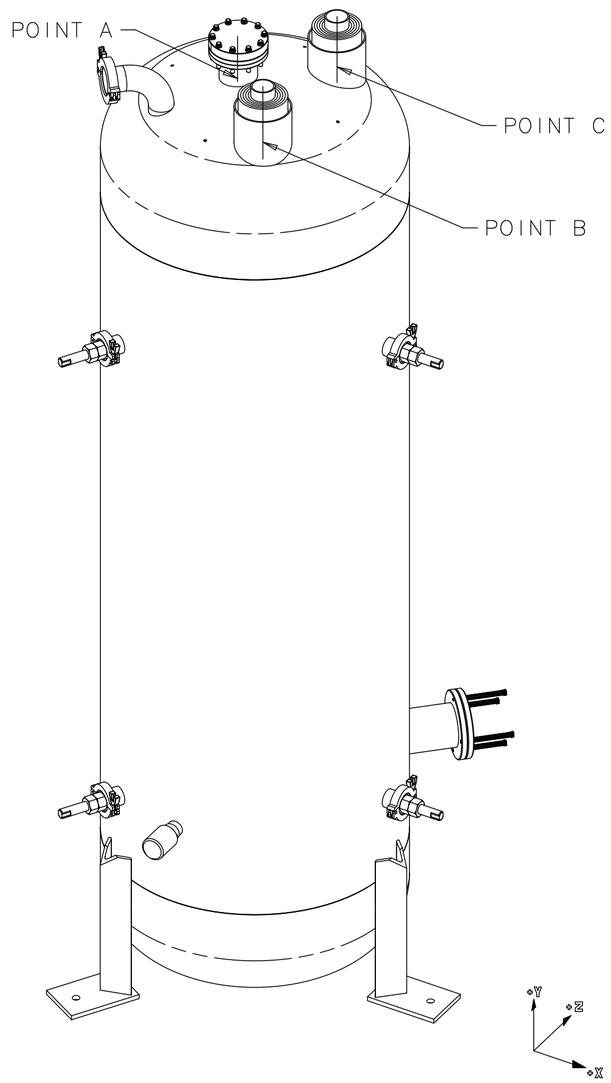

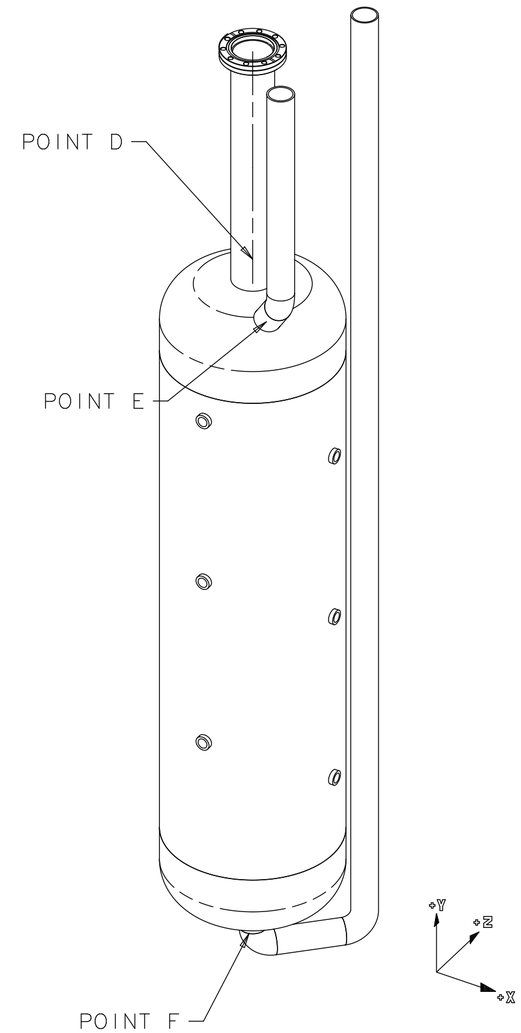

	AXIS	POINT A	POINT B	POINT C	POINT D	POINT E	POINT F
FORCE (lbf)	X	4	12	69	< 1	69	12
	Y	-441	-14	160 at 500°F -80 at -320°F	441	-66 at 500°F 25 at -320°F	-109 at 500°F 23 at -320°F
	Z	9	< 1	88	< 1	84	1
MOMENT (in*lbf)	X	< 1	3	477	< 1	802	1105
	Y	886	3	37	886	774	38
	Z	< 1	12	607	< 1	1734	823

NOTES:
1. FORCES & MOMENTS INCLUDE TOTAL WEIGHT.
2. FORCES & MOMENTS DO NOT INCLUDE EXTERNAL OR INTERNAL PRESSURE.
3. IF NO TEMPERATURE IS SPECIFIED, MOMENTS AND FORCES ARE LISTED AS THE MAXIMUM FROM -320°F TO 500°F

UNLESS OTHERWISE SPECIFIED			ORIGINATOR	J.KILMER	09-FEB-2012
.XX	.XXX	ANGLES	DRAWN	J.TILLMAN	29-FEB-2012
± ---	± ---	± ---	CHECKED	J.RAUCH	27-APR-2012
			APPROVED	R.SANDERS	27-APR-2012

1. BREAK ALL SHARP EDGES --- MAX.
2. DO NOT SCALE DRAWING.
3. DIMENSIONS BASED UPON ASME Y14.5M-1994
4. MAX. ALL MACH. SURFACES ---√
5. DRAWING UNITS: U.S. INCH

USED ON: MD486036 & MD-489597

MATERIAL

FERMI NATIONAL ACCELERATOR LABORATORY
UNITED STATES DEPARTMENT OF ENERGY

E974-MICROBOONE - INFRASTRUCTURE SERVICE EQUIPMENT MICROBOONE FILTER VESSEL LOADING

SCALE	DRAWING NUMBER	SHEET	REV
1:2 & AS NOTED	3974.220-MC-489652	1 OF 1	

CREATED WITH : Ideas12NXSeries | GROUP: PPD/MECHANICAL DEPARTMENT

Created: 08:28:05 on 27-04-13 (D-M-Y) By: jerauch Scale: 1:1 NTTAL