REV	DESCRIPTION	DRAWN / APPROVED	DATE / DATE
A	CRYOSTAT RAISED 24" GENERAL FIELD CHECK DIMENSIONAL CHANGES	G SMITH	08-NOV-2013
			12-NOV-2013
B	UPDATE BEAMLINE LAYOUT TO SHOW CRYOPLANT	G SMITH	29-DEC-2013
		G SMITH	29-DEC-2013
C	UPDATE BEAMLINE LAYOUT TO SHOW NEW COMPONETS LOCATIONS & MODIFIED CRYOPLANT	G SMITH	09-OCT-2014
		G SMITH / R RUCINSKI	17-OCT-2014
D	TRANSLATED CRYOSTAT POSITION DOWNSTREAM, ADDED MUON CATCHER, ADJUST DOOR FRAME BASED ON FIELD, MEASUREMENTS, ADDED CRYOSTAT STAND.	G SMITH	14-NOV-2014
		G SMITH / R RUCINSKI	14-NOV-2014

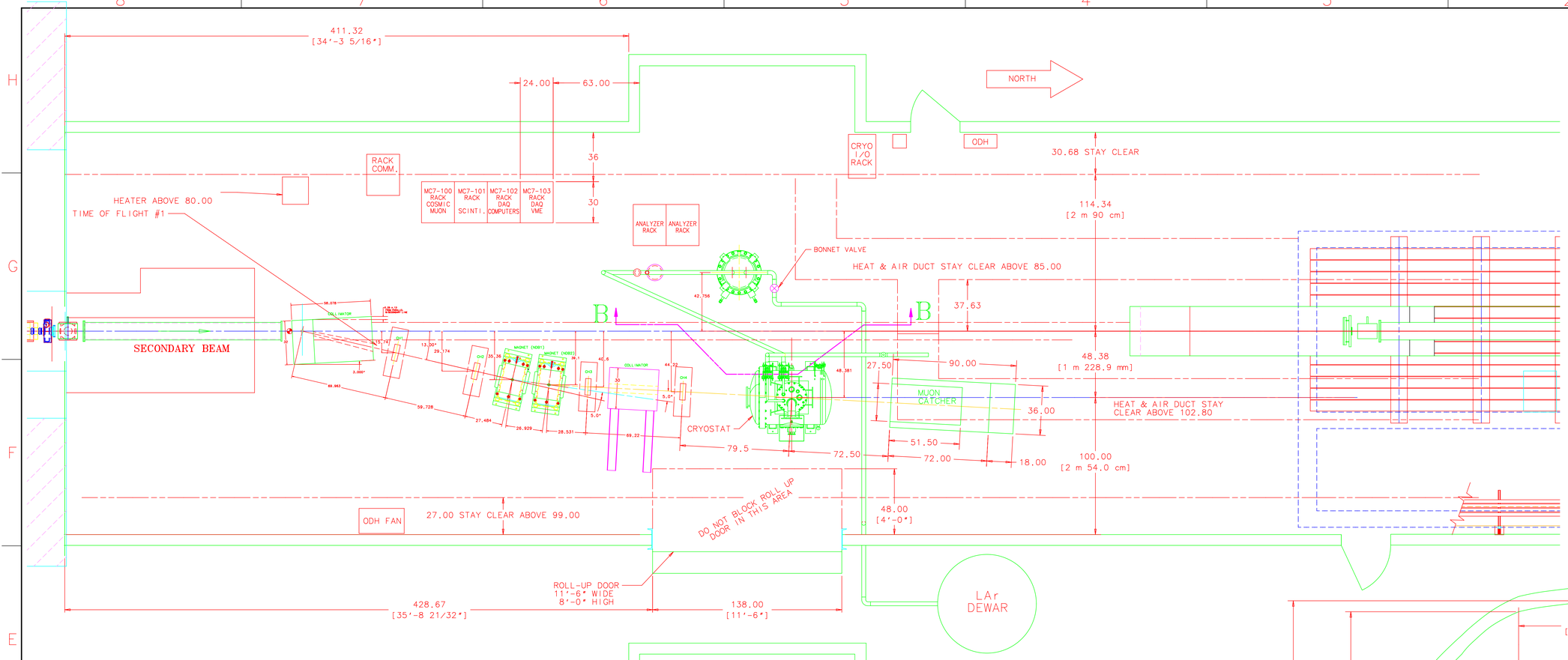

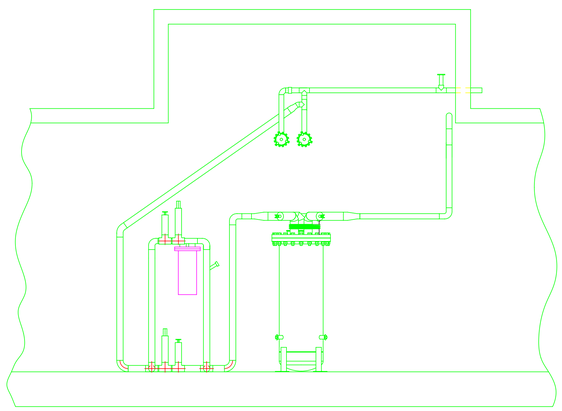

SECTION B:B
SCALE: 1/32

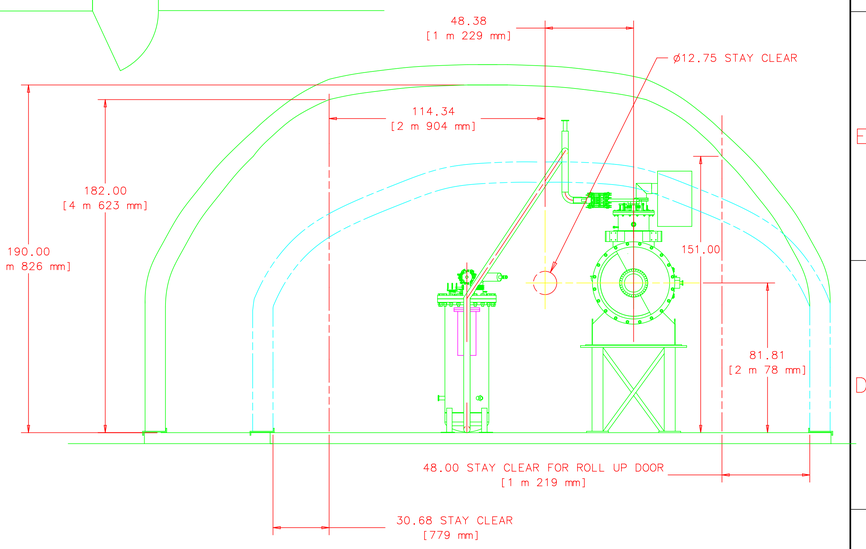

SECTION A:A
SCALE: 1/32

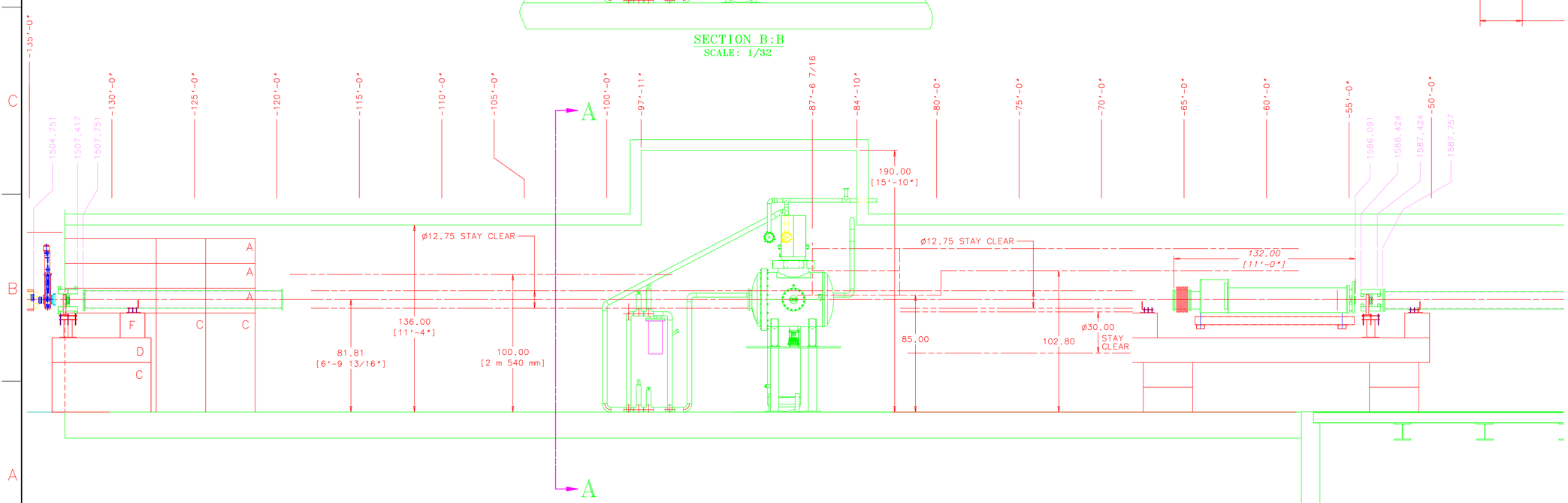

ITEM	PART NO.	DESCRIPTION OR SIZE	QTY.

PARTS LIST

UNLESS OTHERWISE SPECIFIED					
.XX	.XXX	ANGLES	ORIGINATOR	T.TOPE	10-APR-2013
± ---	± ---	± ---	DRAWN	J.RAUCH	10-APR-2013
			CHECKED	T.TOPE	02-MAY-2013
			APPROVED	R.RUCINSKI	02-MAY-2013

1. BREAK ALL SHARP EDGES .015 MAX.
2. DO NOT SCALE DRAWING.
3. DIMENSIONS BASED UPON ASME Y14.5M-1994
4. MAX. ALL MACH. SURFACES 125√
5. DRAWING UNITS: U.S. INCH

USED ON

MATERIAL

FERMI NATIONAL ACCELERATOR LABORATORY
UNITED STATES DEPARTMENT OF ENERGY

PPD/MECHANICAL DEPT.
E907 M-CENTER BEAMLINE
LARIAT EQUIPMENT LAYOUT-MC7

SCALE	DRAWING NUMBER	SHEET	REV
1:32 OR NOTED	9211.520-ME-493650	1 OF 1	D

CREATED WITH : Ideas12NXSeries GROUP: PPD/MECHANICAL DEPARTMENT