TECHNICAL APPENDIX FORM (TA5031) FOR PRESSURE VESSELS
PRESSURE VESSEL ENGINEERING NOTE PER CHAPTER 5031

Prepared by: Terry Tope
Preparation date: 1/5/15

1. Description and Identification
Fill in the label information below:

THIS VESSEL CONFORMS TO FERMILAB ES&H MANUAL CHAPTER 5031

Vessel Title: LArIAT Cryostat

Vessel Number: EN01778 ←**Obtain from Teamcenter**

Vessel Drawing No.: PHPK 07-2032-6500

Maximum Allowable Working Pressure (MAWP)

Internal Pressure: 30 psig with full vacuum

External Pressure: 15 psi

Working Temperature Range: -320 °F 100 °F

Contents: Liquid Argon

Designer / Manufacturer: PHPK Technologies

Test Pressure (if tested at Fermilab) Acceptance Date _____ ← **Document per Chapter 5034 of the Fermilab ES&H Manual**

_____ PSIG, Hydraulic ____ Pneumatic ____

Accepted as conforming to standard by

_____ ←**Actual signature required**

Of Division / Section / Center NEUTRINO Date: 3/5/15

NOTE: Any subsequent changes in contents, pressures, temperatures, valving, etc., which affect the safety of this vessel shall require another review.

Reviewed by: ANDREW DALESANDRO
(Print Name)

Signature: _____ Date: 3/4/15

Director's signature (or designee) if the vessel is for manned areas but doesn't conform to the requirements of the chapter.

Signature: _____ Date: _____

Amendment No.: Reviewed by: Date:

_____ _____ _____

_____ _____ _____

Lab Property Number(s):n/a_____
Lab Location Code: 426_____ (obtain from Safety Officer)
Purpose of Vessel(s): To hold TPC in liquid argon_____
_____
Vessel Capacity/Size:550 liter____ Diameter:30"_____ Length: 50" _____
Normal Operating Pressure (OP) 2 psig_____
MAWP-OP = 30 – 2 = 28__psig

List the numbers of all pertinent drawings and the location of the originals.

Drawing #	Location of Original
PHPK 07-2032-6500	PHPK Technologies
9219.000-MD-44703	FNAL CAD System

2. Design Verification

Is this vessel designed and built to meet the ASME BPVC or "Experiment Vessel" requirements?
Yes_X____ No_____.

If "No" state the standard that was used _____.
Demonstrate that design calculations of that standard have been made and that other requirements of that standard have been satisfied.
Skip to part 3 "system venting verification."

Does the vessel(s) have a U stamp? Yes___X__ No__ ___. If "Yes", complete section 2A; if "No", complete section 2B.

A. Staple photo of U stamp plate below.
Copy "U" label details to the side

Copy data here:

CERTIFIED BY PHPK TECHNOLOGIES

COLUMBUS, OHIO 43204

30 PSI AT 100 F

MAX. ALLOWABLE WORKING PRESSURE

15 PSI AT 100 F

MAX ALLOWABLE EXTERNAL WORKING PRESSURE

-320 F AT 30 PSI

MIN. DESIGN METAL TEMPERATURE

SERIAL NO 4821, YEAR BUILT 2007

Provide ASME design calculations in an appendix. On the sketch below, circle all applicable sections of the ASME code per Section VIII, Division I. (Only for non-coded vessels)

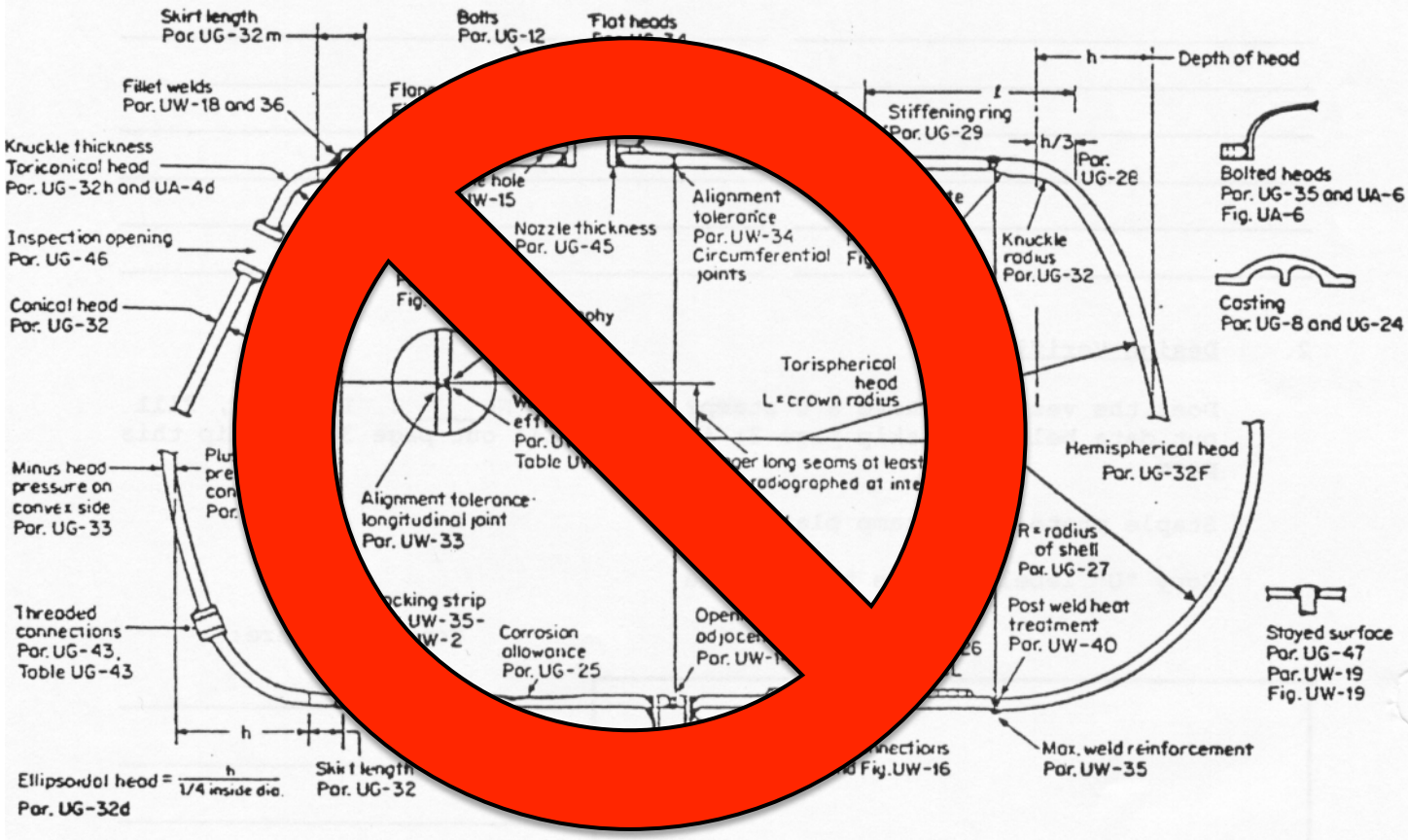

THE LArIAT Cryostat IS A CODE STAMPED ASME VESSEL. THIS SECTION IS NOT REQUIRED.

Item	Reference ASME Code Section	CALCULATION RESULT (Required thickness or stress level vs. actual thickness calculated stress level)
_____	_____	_____ vs _____
_____	_____	_____ vs _____
_____	_____	_____ vs _____
_____	_____	_____ vs _____
_____	_____	_____ vs _____

3. System Venting Verification Provide the vent system schematic.

Does the venting system follow the Code UG-125 through UG-137?
Yes_X__ No___

Does the venting system also follow the Compressed Gas Association Standards S-1.1 and S-1.3?
Yes __X___ No_____

A "no" response to both of the two proceeding questions requires a justification and statement regarding what standards were applied to verify system venting is adequate.

List of reliefs and settings:

Manufacturer	Model #	Set Pressure	Flow Rate	Size
FIKE	SRL BT	30 PSIG	10,356 lb/hr argon	2 inch

4. Operating Procedure

Is an operating procedure necessary for the safe operation of this vessel?
Yes_____ No__X___ (If "Yes", it must be appended)

5. Welding Information

Has the vessel been fabricated in a non-code shop? Yes_____ No___X__
If "Yes", append a copy of the welding shop statement of welder qualification (Procedure Qualification Record, PQR) which references the Welding Procedure Specification (WPS) used to weld this vessel.

6. Existing and Unmanned Area Vessels

Is this vessel or any part thereof in the above categories?
Yes_____ No___X____

If "Yes", follow the requirements for an Extended Engineering Note for Existing and Unmanned Area Vessels.

7. Exceptional Vessels

Is this vessel or any part thereof in the above category?
Yes_____ No____X___

If "Yes", follow the requirements for an Extended Engineering Note for Exceptional Vessels.

THIS VESSEL CONFORMS TO FERMILAB ES&H MANUAL CHAPTER 5031

Vessel Title _____

Vessel Number _____

Vessel Drawing No. _____

Maximum Allowable Working Pressure (MAWP)

Internal Pressure _____

External Pressure _____

Working Temperature Range _____ ˚F _____ ˚F

Contents _____

Designer / Manufacturer _____

Test Pressure (if tested at Fermilab) Acceptance Date _____

_____ PSIG, Hydraulic _____ Pneumatic _____

Accepted as conforming to standard by

_____

Of Division / Section / Center _____

NOTE: Any subsequent changes in content, pressures, temperatures, valving, etc., which affect the safety of this vessel shall require another review and test.

Figure 2. Sample of sticker to be completed and placed on vessel.

LArIAT Cryostat Description

The LArIAT cryostat is a 550 liter liquid argon cryostat with a 30 psig MAWP (45 psid relative to the insulting vacuum) and the inner vessel is a stamped ASME pressure vessel. The cryostat is vacuum insulated except for a large room temperature flange located on top of the inner vessel. The inner vessel contains a small Liquid Argon Time Projection Chamber (LArTPC). The cryostat will be located in the Fermilab Test Beam in the MC7 enclosure and the charged particle beam will be used to calibrate and characterize LArTPC response and develop software tools without relying solely on simulations. The cryostat and LArTPC detector were originally used for the ArgoNeuT experiment which was located upstream of the MINOS near detector. The original pressure vessel engineering note is in the appendix. Due to the vessel modifications and location change a new pressure vessel engineering note has been created. A 30 inch diameter cold flange on the inner vessel and corresponding 42 inch diameter flange on the vacuum jacket allow access to the LArTPC. The cold flanges are sealed with double metallic c-seals. A vacuum is maintained between the concentric c-seals to monitor for leakage. Trapped volumes reliefs protect the seal monitoring spaces.

The cryostat was modified for LArIAT by PHPK who fabricated the cryostat originally. Figure 1 shows the modified cryostat. This modification was performed as a "R" stamp alteration. The alteration consisted of the following:

(1) Addition of a 1-1/2 inch diameter inner vessel bottom drain terminated by a 3-3/8 inch diameter conflat.
(2) Addition of a 6 inch diameter inner vessel side flange populated by two 2-3/4 inch diameter conflats with a corresponding 14 inch diameter flange on the vacuum jacket to allow access to the 6 inch diameter inner vessel flange.
(3) An eleven inch diameter excluder to displace liquid argon upstream of the LArTPC with a corresponding 16-1/2 inch diameter Conflat flange on the vacuum jacket to allow for mounting of a titanium beam window. A separate vacuum window engineering note documents the titanium beam window.

Cryostat Relief Requirements

The required ASME relief device is a 2 inch diameter rupture disk set at 30 psig (PSE-201-A). A spring operated relief valve (PSE-202-A) and an actuated cryogenic valve (PCV-220-A) provide operational pressure relief.

The cryostat is connected to two pressure sources:

(1) Liquid argon flows from a dewar outside MC7 thru a filter and into the cryostat. This argon supply dewar has its primary reliefs set at 100 psig.
(2) Filter regeneration is accomplished by either argon vapor from the liquid argon dewar located outside MC7 or 2% hydrogen/98% argon from a tube trailer. Its possible to valve the regeneration gas into the cryostat although that would be an operational upset.
(3) The attached filter pressure vessel which has its reliefs set at 100 psig.

Cryostat Filling

In the LArIAT ODH analysis the maximum flow rate that the LAr supply dewar can provide to the cryostat is 8,232 lb/hr. This calculation is shown in the appendix. This maximum flow rate calculated is conservative because it assumes single phase liquid in the piping. In reality the pressure reduction and heat input would generate vapor which would reduce the flow area available for liquid such that the mass flow rate would be reduced. The worst relief case is then for this maximum liquid flow rate delivered to the cryostat to be relieved as room temperature vapor.
The rupture disc capacity is calculated using the methods found in Fike Technical Bulletin 8102. For critical flow the vapor capacity is calculated in the following manner

$$W = \frac{A \times K_D \times C \times P}{\sqrt{\frac{T \times Z}{M}}}$$

where

W = rated flow capacity, lb/hr

A = minimum net flow area, square inches, 3.36 in^2 for the 2 inch Fike SRL

K_D = coefficient of discharge, 0.62 for rupture disc devices

C = constant based on ratio of specific heats, 377 for argon

P = set pressure plus overpressure allowance plus atmospheric pressure, psia, 49.17 psia (110% of MAWP for the filling case)

T = absolute temperature at inlet, degrees Rankine, 560 ^{o}R for filling case where liquid entering cryostat is relieved as room temperature vapor

Z = compressibility factor for corresponding P and T, 0.9985.

Thus the flow capacity for the rupture disk at room temperature is

$$W = \frac{3.36 \times 0.62 \times 377 \times 49.17}{\sqrt{\frac{560 \times 0.9985}{40}}} = 10{,}328\ lb/hr$$

which is greater than the largest mass flow that can be delivered to the cryostat during filling (8,232 lb/hr).

Fire Case

The relief requirement for the fire case was calculated as 147 SCFM of air in the original pressure vessel engineering note (see appendix). The original pressure vessel engineering note reduced this value by taking credit for a fire suppression system. No such system exits at the new location.

From CGA S-1.3 section 6.1.4 the required mass flow W of the fluid being relieved can be calculated from

$$W = \frac{Q_{ae}C}{18.35}\sqrt{\frac{M}{ZT}}$$

where

Q_{ae} = Calculated flow capacity using the applicable formula from 6.2, 6.3.2, or 6.3.3 with F = 1. In ft^3/min of free air, 147 ft^3/min

W = Required mass flow rate of lading through the PRD(s) in lbm/hr of the fluid being relieved

C = Constant for gas or vapor related to the ratio of the specific heats (k=C_p/C_v) at standard conditions from Table 4, 377 for argon

M = Molecular weight of fluid, 39.94 for Argon

T = Temperature in degrees Rankine, 560 ^{o}R

Z = Compressibility factor at the temperature specified in 6.1.3 in degrees Rankine

$$W = \frac{147\times377}{18.35}\sqrt{\frac{\frac{39.9}{4}}{1\times560}} = 807\,\frac{lb}{hr}$$

807 lb/hr is far less than the rupture disc capacity of 10,356 lb/hr.

Filter Regeneration

Its possible to pressurize the cryostat with filter regeneration gas. For filter regeneration, a Matheson 3201 regulates the premix regeneration gas supplied by a tube trailer (2% H2/ 98% Ar). Ignoring all the other system restrictions, it can deliver up to 150 SCFM air. This converts to 825 lb/hr of argon using the method in CGA S-1.3 6.1.4.

The flow rate of argon gas used for filter regeneration is limited by the mass flow controller FCV-653-A. The manufacturer states that the design maximum flow of 1,000 SLPM is achieved at a 14 psi pressure drop across the device. 1,000 SLPM of argon converts to 0.0608 lb/sec (219.1 lb/hr). Crane Technical Paper No. 410 equation 1-43 estimates pressure drop for compressible flow

$$w = 0.525 Y d^2 \sqrt{\frac{\Delta P}{K \overline{V}_1}}$$

where

w = rate of flows (lb/s)

Y = net expansion factor for compressible flow through orifices, nozzles, venture, control valves, or pipe (unitless), estimated as 0.552 for the nominal case and 0.710 for the maximum case from from pate A-23 of Crane.

d = internal diameter (in)

ΔP = differential pressure (psi), 14 psi for the nominal case and 100 psi for the maximum case

K = resistance coefficient (unitless)

$\overline{V}_1$ = specific volume of fluid (ft^3/lb) at upstream condition, 5.004 ft^3/lb for the nominal case and 1.238 ft^3/lb for the maximum case

The argon supply dewar is relieved at 100 psig. If the pressure drop across the mass flow controller is 100 psig (maximum case) the flow at this pressure can be estimated by ratio to the nominal case pressure of 14 psi in the following manner.

$$\frac{w_{max}}{w_{nom}} = \frac{0.525 Y_{max} d^2 \sqrt{\frac{\Delta P_{max}}{K \bar{V}_{1,max}}}}{0.525 Y_{nom} d^2 \sqrt{\frac{\Delta P_{nom}}{K \bar{V}_{1,nom}}}}$$

which reduces to

$$\frac{w_{max}}{w_{nom}} = \frac{Y_{max} \sqrt{\frac{\Delta P_{max}}{\bar{V}_{1,max}}}}{Y_{nom} \sqrt{\frac{\Delta P_{nom}}{\bar{V}_{1,nom}}}}$$

and the mass flow rate ratio across the mass flow controller is estimated as

$$\frac{w_{max}}{w_{nom}} = \frac{0.710 \sqrt{\frac{100}{1.238}}}{0.552 \sqrt{\frac{14}{5.004}}} = 6.911.$$

Thus the estimated mass flow for the worst case of 100 psig across the mass flow controller is 1,514 lb/hr.

<u>Attached Liquid Argon Filter</u>

A liquid argon filter is attached to the cryostat and this pressure vessel has its reliefs set at 100 psig. Its worst case scenario is the fire case which has a mass flow rate of 419.5 lb/hr of argon which is far less than the rupture disk capacity mounted on the cryostat. This flow rate is documented in Teamcenter Item EN001781 which is the filter pressure vessel note.

Table 1: Relief scenario summary.

Relief case	Relief requirement lb/hr argon	Rupture disk capacity lb/hr argon
Filling from LAr dewar	8,232	10,328 (room temperature gas)
Fire[1]	807	10,328 (room temperature gas)
Loss of vacuum[1]	62	10,328 (room temperature gas)
Regeneration gas from tube trailer	825	10,328 (room temperature gas)
Regeneration gas from LAr dewar	1,514	10,328 (room temperature gas)
Fire case for LAr filter[2]	420	10,328 (room temperature gas)

[1]Calculated in original cryostat pressure vessel engineering note.
[2]Documented in filter pressure vessel engineering note Teamcenter item EN01781.

Vacuum Jacket Relief

CGA S-1.3—2008 states that the total discharge area of vacuum jacket relief devices on a container shall be at least 0.00024 in^2/lb of water capacity of the container. The original pressure vessel engineering note calculates the required discharge area as 0.34 in^2. PS-250-V is a Fermilab parallel plate relief mounted on a KF 40 fitting. The Fermilab parallel plate relief is larger in diameter than the KF 40 fitting. The KF 40 fitting has a diameter of 0.935 inches such that its cross-sectional area is 0.687 in^2 thus the vacuum space relief discharge area meets the CGA requirement.

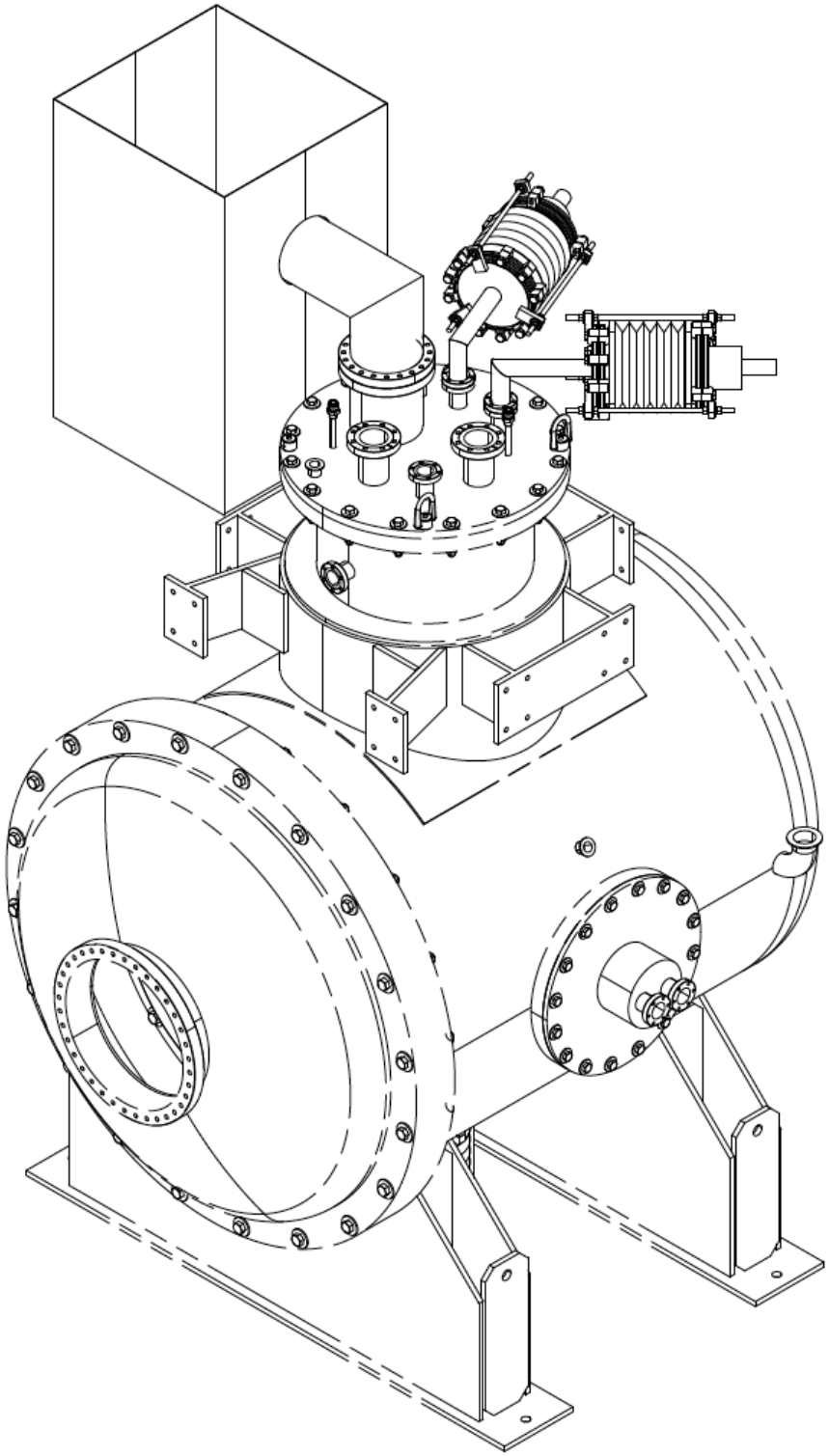

Figure 1: LArIAT cryostat. See Appendix for original and altered cryostat drawings.

Appendix – ODH Calculation Which Determines Maximum Cryostat Fill Rate

FERMILAB
ENGINEERING NOTE

SECTION	PROJECT	SERIAL-CATEGORY	PAGE
			9

SUBJECT: LARIAT CRYOSTAT RELIEF OPEN LEAK RATE

NAME: RUSS RUCINSKI

DATE: 12-5-14

REVISION DATE:

RELIEF VALVE - RELIEF EVENT.

WORST CASE HAVE THE LAr DEWAR OUTSIDE @ 100 PSIG AND SUPPLYING LIQUID TO FULL OPEN RELIEF VALVE OR RUPTURE DISC.

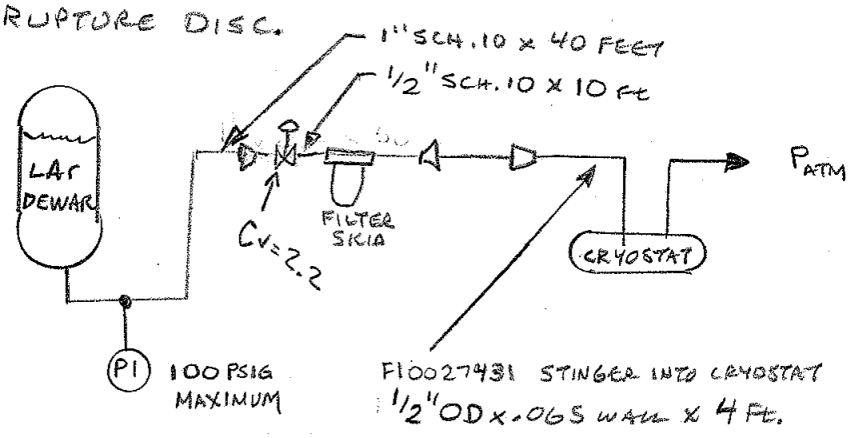

FIND EQUIVALENT LENGTH OF PIPE. IN TERMS OF 1" SCH.10.

$d_{1''SCH.10} = 1.097$ INCHES $\qquad f_{1''} .023''$

$d_{1/2''SCH.10} = .674$ INCHES $\qquad f_{1/2''} = .027''$

$d_{1/2''OD \times .065} = .37$ INCHES $\qquad f_{1/2''} = .030''$

$K = \frac{fL}{D}$ AND $K_a = K_b \left(\frac{d_a}{d_b}\right)^4$ EQN. 2-4 EQN 2-5 CRANE TECH-PAPER 410

$$K_{1''SCH.10} = \frac{fL}{D} = \frac{.023\,(40\,ft)}{1.097\,IN/12\,IN/FT} = \underline{10.1}$$

$$K_{1/2''SCH.10} = \frac{fL}{D} = \frac{.027(10\,FT)}{\frac{.674}{12}\,FT} = 4.8$$

CONVERT TO 1" SCH.10

$$K_{1''SCH.10} = K_{1/2''SCH.10}\left(\frac{d_{1''}}{d_{1/2}}\right)^4 = 4.8\left(\frac{1.097}{.674}\right)^4 = \underline{33.7}$$

$$K_{VALVE\ (CV=2.2)} = \left[\frac{29.9\, d^2}{C_V}\right]^2$$ EQUATION 2-6 FROM CRANE

$$K_{VALVE} = \left[\frac{29.9\,(1.097)^2}{2.2}\right]^2 = 268$$ EQUIVALENT K 1" SCH. 10

$$K_{1\frac{1}{2}''\,OD\times.065} = \frac{fL}{D} = \frac{.03\,(4\,Ft)}{\frac{.37}{12}\,Ft} = 3.9$$

CONVERT TO 1" SCH. 10

$$K_{1''\,SCH.10} = 3.9\left(\frac{1.097}{.37}\right)^4 = 301$$

$$K_{TOTAL\ 1''} = 10.1 + 33.7 + 268 + 301 = 613$$

EQUIVALENT LENGTH

$$L_{EQ.} = \frac{KD}{f} = \frac{613\left(\frac{1.097}{12}\,Ft\right)}{.023} = 2436\ Ft.$$

CALCULATE THE FLOW

$$\Delta P = 3.36\times10^{-6}\,\frac{fLW^2}{\rho d^5}$$

EQN. 3-5 IN CRANE TECH PAPER 410.

$$W = \left[\frac{\Delta P\cdot\rho\cdot d^5}{3.36\times10^{-6}\,fL}\right]^{1/2} = \left[\frac{100\,psi\,(80.3\,lb/ft^3)(1.097\,in)^5}{3.36\times10^{-6}(.023)(2436\,ft)}\right]^{1/2}$$

$$W = 8232\ lb/hr$$

$$Q_{LEAK} = \frac{W}{\rho_{GAS\ Ar\ STP}} = \frac{8232\ lb/hr}{.102\ lb/ft^3}\times\frac{1\,hr}{60\,min} = \boxed{1345\ CFM}$$

Appendix – Feedthrus Attached to New Side Penetration of Pressure Vessel

FEEDTHROUGH

Straight Conductor
Weldable

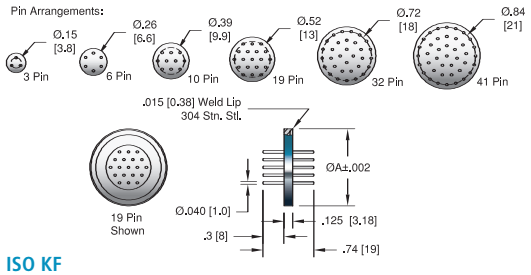

ISO KF

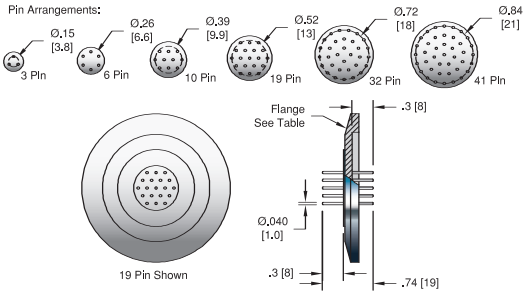

ConFlat

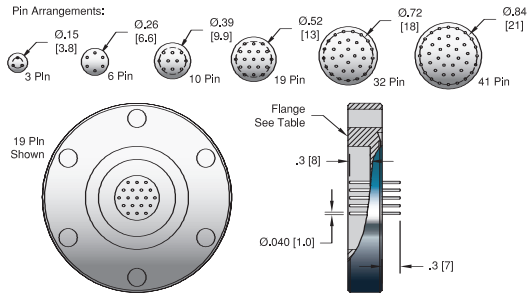

Straight/Solder Cup Conductor
Weldable

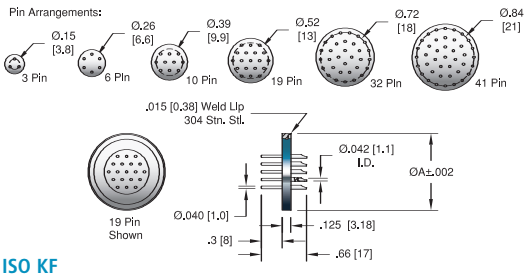

ISO KF

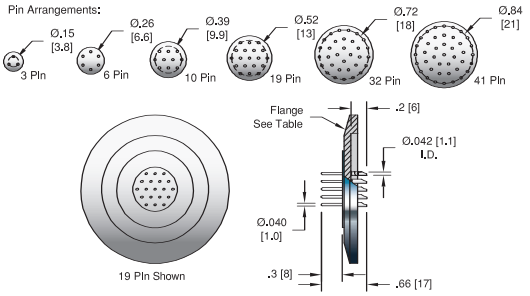

ConFlat

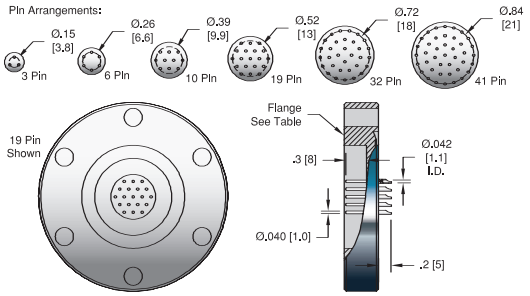

Specifications

Materials

Housing: 304 Stainless steel
Pins: 330 Stainless steel (Nickel plated)
Insulation: Glass-ceramic
Magnetic Materials: No

Voltage Rating 1 kV DC

Current Rating 5 Amps per pin

Temperature Range -269°C to 450°C, ISO KF -25°C to 205°C

Pressure @ 20°C ISO KF 0 PSIG

3 Pin: 550 PSIG (38 Bar)	19 Pin: 400 PSIG (28 Bar)
6 Pin: 500 PSIG (34 Bar)	32 Pin: 375 PSIG (26 Bar)
10 Pin: 450 PSIG (31 Bar)	41 Pin: 350 PSIG (24 Bar)

Weldable Straight Pin

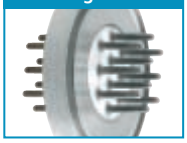

ISO KF Straight Pin

ConFlat Straight Pin

NO. PINS	PIN TYPE	INSTALLATION	PART NUMBER
3	.040 [1.0] Straight	Weld	18840-01-W
6	.040 [1.0] Straight	Weld	18841-01-W
10	.040 [1.0] Straight	Weld	18842-01-W
19	.040 [1.0] Straight	Weld	18843-01-W
32	.040 [1.0] Straight	Weld	18844-01-W
41	.040 [1.0] Straight	Weld	18845-01-W
		ISO FLANGE	
3	.040 [1.0] Straight	NW25KF	17040-01-KF
6	.040 [1.0] Straight	NW40KF	17041-01-KF
10	.040 [1.0] Straight	NW40KF	17042-01-KF
19	.040 [1.0] Straight	NW40KF	17043-01-KF
32	.040 [1.0] Straight	NW40KF	17044-01-KF
41	.040 [1.0] Straight	NW50KF	17045-01-KF
		CONFLAT FLANGE	
3	.040 [1.0] Straight	2 3/4" (NW35CF)	17020-01-CF
6	.040 [1.0] Straight	2 3/4" (NW35CF)	17021-01-CF
10	.040 [1.0] Straight	2 3/4" (NW35CF)	17022-01-CF
19	.040 [1.0] Straight	2 3/4" (NW35CF)	17023-01-CF
32	.040 [1.0] Straight	2 3/4" (NW35CF)	17024-01-CF
41	.040 [1.0] Straight	3 3/8" (NW50CF)	17025-01-CF

Weldable Solder Cup

ISO KF Solder Cup

ConFlat Solder Cup

3	.040 [1.0] Solder Cup	Weld	18850-01-W
6	.040 [1.0] Solder Cup	Weld	18851-01-W
10	.040 [1.0] Solder Cup	Weld	18852-01-W
19	.040 [1.0] Solder Cup	Weld	18853-01-W
32	.040 [1.0] Solder Cup	Weld	18854-01-W
41	.040 [1.0] Solder Cup	Weld	18855-01-W
		ISO FLANGE	
3	.040 [1.0] Solder Cup	NW25KF	17050-01-KF
6	.040 [1.0] Solder Cup	NW40KF	17051-01-KF
10	.040 [1.0] Solder Cup	NW40KF	17052-01-KF
19	.040 [1.0] Solder Cup	NW40KF	17053-01-KF
32	.040 [1.0] Solder Cup	NW40KF	17054-01-KF
41	.040 [1.0] Solder Cup	NW50KF	17055-01-KF
		CONFLAT FLANGE	
3	.040 [1.0] Solder Cup	2 3/4" (NW35CF)	17030-01-CF
6	.040 [1.0] Solder Cup	2 3/4" (NW35CF)	17031-01-CF
10	.040 [1.0] Solder Cup	2 3/4" (NW35CF)	17032-01-CF
19	.040 [1.0] Solder Cup	2 3/4" (NW35CF)	17033-01-CF
32	.040 [1.0] Solder Cup	2 3/4" (NW35CF)	17034-01-CF
41	.040 [1.0] Solder Cup	3 3/8" (NW50CF)	17035-01-CF

Contacts

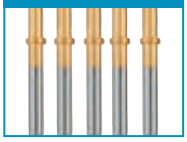

TYPE	MATERIAL	DESCRIPTION	PART NUMBER
0.040 Crimp Contacts	Copper Alloy - Gold Flash	Accepts wire up to 0.040 [1.0]	16167-03-A†
Crimp Tool		For 0.025" - 0.075" Crimp Diameters	2840-05

*Contacts priced and sold in packages of 5. †Shown in photo. See the Accessories section for more information on all accessories.

CeramTec
THE CERAMIC EXPERTS

Feedthrough :: Pin Header - to 5 KV / 5 Amps / 4 to 10 Pins

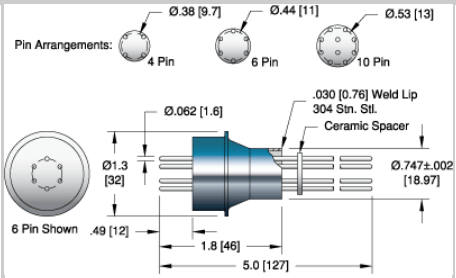

Specifications - 4, 6 & 10 Pin

Materials

Pin: Alumel
Insulation: Alumina ceramic
Flange: 304 Stainless steel
Magnetic Materials: Yes

Voltage Rating See table

Current Rating 5 Amps per pin

Temperature Range
-269º C to 450º C, ISO KF -25º C to 205º C

Pressure @ 20ºC

ISO KF: 0 PSIG
4 Pin: 600 PSIG (41 Bar)
6 Pin: 550 PSIG (38 Bar)
10 Pin: 500 PSIG (34 Bar)

Leak Rate $<1x10^{-10}$ atm-cc/sec (He)

Installation: Weld, ISO KF or ConFlat

No. Pins	Installation	Voltage DC		Drawing Files			Part No. (add to cart)
		Pin/Shield	Pin/Pin	.GIF	CAD	3D	
4	Weld	3 kV	1.5 kV	.GIF (JavaScript:void(0))	.DWG (JavaScript:void(0))	.IGS (JavaScript:void(0))	10234-01-W (../quote/add_to_cart.cfm?part=143&Catalog=Her
6	Weld	3 kV	1.5 kV	.GIF (JavaScript:void(0))	.DWG (JavaScript:void(0))	.IGS (JavaScript:void(0))	10235-01-W (../quote/add_to_cart.cfm?part=144&Catalog=Her
10	Weld	1.5 kV	800 V	.GIF (JavaScript:void(0))	.DWG (JavaScript:void(0))	.IGS (JavaScript:void(0))	10236-01-W (../quote/add_to_cart.cfm?part=145&Catalog=Her
4	NW16KF	3 kV	1.5 kV	.GIF (JavaScript:void(0))	.DWG (JavaScript:void(0))	.IGS (JavaScript:void(0))	10234-13-KF (../quote/add_to_cart.cfm?part=146&Catalog=He
6	NW16KF	3 kV	1.5 kV	.GIF (JavaScript:void(0))	.DWG (JavaScript:void(0))	.IGS (JavaScript:void(0))	10235-13-KF (../quote/add_to_cart.cfm?part=147&Catalog=He
10	NW16KF	1.5 kV	800 V	.GIF (JavaScript:void(0))	.DWG (JavaScript:void(0))	.IGS (JavaScript:void(0))	10236-15-KF (../quote/add_to_cart.cfm?part=148&Catalog=He
4	1 1/3" ConFlat (NW16CF)	3 kV	1.5 kV	.GIF (JavaScript:void(0))	.DWG (JavaScript:void(0))	.IGS (JavaScript:void(0))	10234-02-CF (../quote/add_to_cart.cfm?part=149&Catalog=He
6	1 1/3" ConFlat (NW16CF)	3 kV	1.5 kV	.GIF (JavaScript:void(0))	.DWG (JavaScript:void(0))	.IGS (JavaScript:void(0))	10235-02-CF (../quote/add_to_cart.cfm?part=150&Catalog=He
10	1 1/3" ConFlat (NW16CF)	1.5 kV	800 V	.GIF (JavaScript:void(0))	.DWG (JavaScript:void(0))	.IGS (JavaScript:void(0))	10236-02-CF (../quote/add_to_cart.cfm?part=151&Catalog=He
4	2 3/4" ConFlat (NW35CF)	3 kV	1.5 kV	.GIF (JavaScript:void(0))	.DWG (JavaScript:void(0))	.IGS (JavaScript:void(0))	10234-03-CF (../quote/add_to_cart.cfm?part=152&Catalog=He
6	2 3/4" ConFlat (NW35CF)	3 kV	1.5 kV	.GIF (JavaScript:void(0))	.DWG (JavaScript:void(0))	.IGS (JavaScript:void(0))	10235-03-CF (../quote/add_to_cart.cfm?part=153&Catalog=He
10	2 3/4" ConFlat (NW35CF)	1.5 kV	800 V	.GIF (JavaScript:void(0))	.DWG (JavaScript:void(0))	.IGS (JavaScript:void(0))	10236-03-CF (../quote/add_to_cart.cfm?part=154&Catalog=He

For welding instructions click here. (/reference/braze.cfm) For .062 lead attachment click here. (view_partgroups.cfm?TechNoteIDList=137) A.3 PDF DATA SHEET (PDFs/12/A.3(-$).pdf)

Top (#top)

Accessories

Type	Material	Description	Drawing Files	Part No. (add to cart)	Price
			.GIF		
In-Vacuum Cable - 28 AWG Stranded	Kapton	850 V - 2.5 Amps - 30 ft. - .028 Dia.	.GIF (JavaScript:void(0))	21621-01-A (../quote/add_to_cart.cfm?part=2282&Catalog=Hermetic)	$60.67
In-Vacuum Cable - 22 AWG Stranded	Kapton	850 V - 5 Amps - 30 ft. - .035 Dia.	.GIF (JavaScript:void(0))	21643-01-A (../quote/add_to_cart.cfm?part=2283&Catalog=Hermetic)	$52.95

Appendix – Original Pressure Vessel Engineering Note for ArgoNeuT

PRESSURE VESSEL ENGINEERING NOTE

PER CHAPTER 5031

Prepared by: Robert Sanders
Preparation date: April 14, 2008

1. Description and Identification
   Fill in the label information below:

This vessel conforms to Fermilab ES&H Manual Chapter 5031

Vessel Title T962 TPC Liquid Argon Cryostat

Vessel Number PPD10114 ←Obtain from Division/Section Safety Officer

Vessel Drawing Number PHPK 07-2032-6500

Maximum Allowable Working Pressures (MAWP):
Internal Pressure 30 PSIG WITH FULL VACUUM
External Pressure 15 PSI

Working Temperature Range -320 °F 100 °F

Contents LIQUID ARGON

Designer/Manufacturer PHPK TECHNOLOGIES

Test Pressure (if tested at Fermi) Acceptance Date: ←Document per Chapter 5034 of the Fermilab ES&H Manual

PSIG, Hydraulic Pneumatic
Accepted as conforming to standard by

of Division/Section PPD Date: 6/23/08 ←Actual signature required

NOTE: Any subsequent changes in contents, pressures, temperatures, valving, etc., which affect the safety of this vessel shall require another review.

Reviewed by: Alejandro Martinez ID #7349 Date: 4/28/08

Director's signature (or designee) if the vessel is for manned areas but doesn't conform to the requirements of the chapter.

Date:

Date:
ES&H Director Concurrence

Amendment No.:	Reviewed by:	Date:

Lab Property Number(s): Vessel belongs to Yale
Lab Location Code: 701030125 (obtain from safety officer)
Purpose of Vessel(s): To Hold T962 TPC in ~ 550 L of Liquid Argon

Vessel Capacity/Size: 550 L Diameter: 30 inch Length: 50 inch
Normal Operating Pressure (OP) 2 psig
MAWP-OP = 28 PSI

List the numbers of all pertinent drawings and the location of the originals.

Drawing #	Location of Original
PHPK 07-2032-6500	BEG (electronic)
9219.000-MD-444703	BEG

2. Design Verification

Is this vessel designed and built to meet the Code or "In-House Built" requirements?
Yes X No_____.

If "No" state the standard that was used _____.
Demonstrate that design calculations of that standard have been made and that other requirements of that standard have been satisfied.
Skip to part 3 "system venting verification."

Does the vessel(s) have a U stamp? Yes X No_____. If "Yes", complete section 2A; if "No", complete section 2B.

A. Staple photo of U stamp plate below.
Copy "U" label details to the side

Copy data here:
CERTIFIED BY PHPK TECHNOLOGIES
COLUMBUS, OHIO 43204
30 PSI AT 100 F
MAX. ALOWABLE WOKING PRESSURE
15 PSI AT 100 F
MAX. ALLOWABLE EXTERNAL WORKING
PRESSURE

-320 F AT 30 PSI

MIN. DESIGN METAL TEMPERATURE

SERIAL NO 4821, YEAR BUILT 2007

Provide ASME design calculations in an appendix. On the sketch below, circle all applicable sections of the ASME code per Section VIII, Division I. (Only for non-coded vessels)

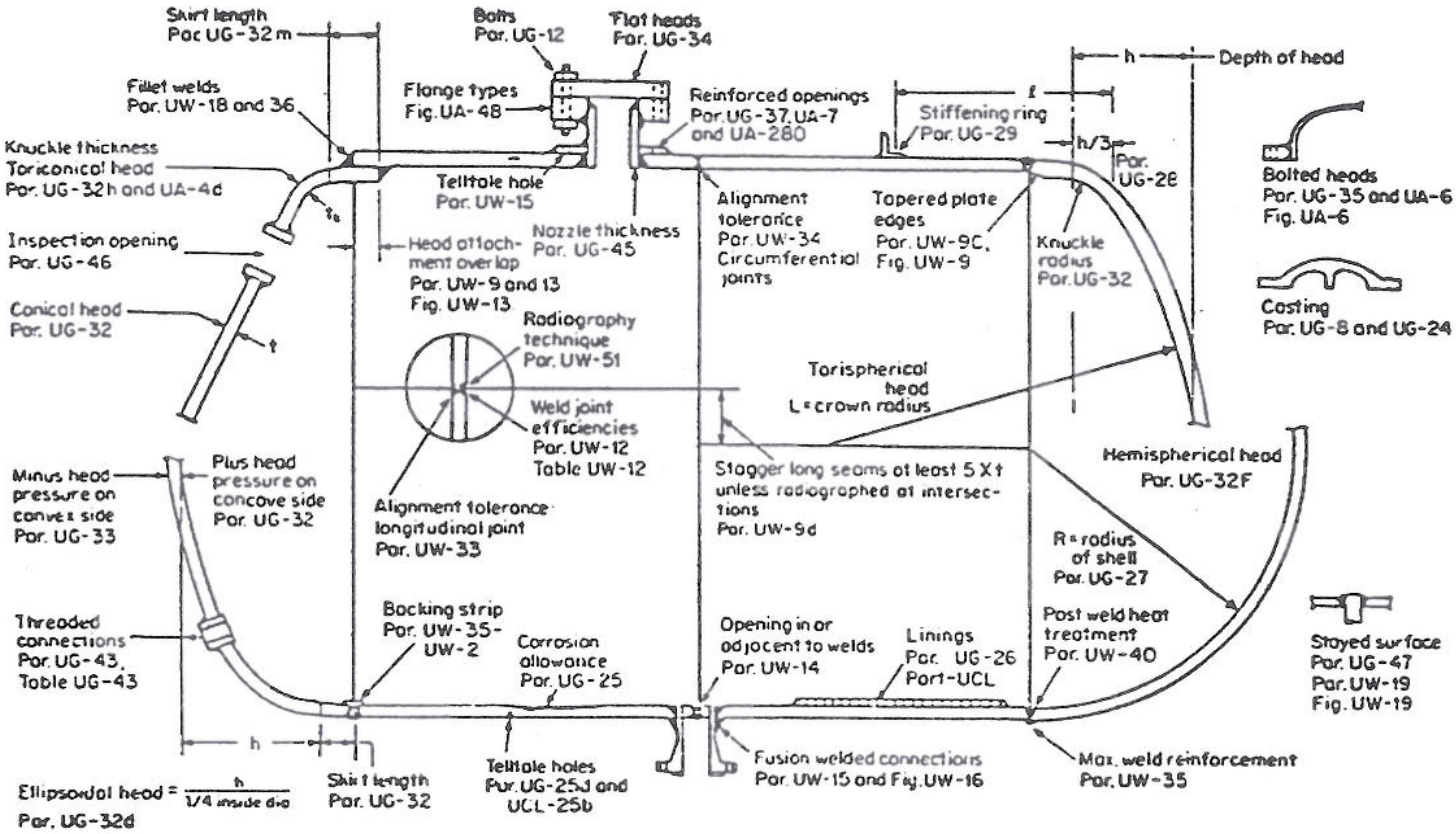

Figure 1. ASME Code: Applicable Sections

2B.

Summary of ASME Code

Item	Reference ASME Code Section	CALCULATION RESULT (Required thickness or stress level vs. actual thickness calculated stress level)
_____	_____	_____ vs _____
_____	_____	_____ vs _____
_____	_____	_____ vs _____
_____	_____	_____ vs _____
_____	_____	_____ vs _____

3. System Venting Verification Provide the vent system schematic.

Does the venting system follow the Code UG-125 through UG-137?
Yes X No___

Does the venting system also follow the Compressed Gas Association Standards S-1.1 and S-1.3?
Yes X No_____

A "no" response to both of the two proceeding questions requires a justification and statement regarding what standards were applied to verify system venting is adequate.

List of reliefs and settings:

Manufacturer	Model #	Set Pressure	Flow Rate	Size
FIKE	SRL	29.7 psig	see vent analysis	I 1/2 Inch

4. Operating Procedure

Is an operating procedure necessary for the safe operation of this vessel?
Yes_____ No X (If "Yes", it must be appended)

5. Welding Information

Has the vessel been fabricated in a non-code shop? Yes_____ No X
If "Yes", append a copy of the welding shop statement of welder qualification (Procedure Qualification Record, PQR) which references the Welding Procedure Specification (WPS) used to weld this vessel.

6. Existing, Used and Unmanned Area Vessels

Is this vessel or any part thereof in the above categories?
Yes_____ No X

If "Yes", follow the requirements for an Extended Engineering Note for Existing, Used and Unmanned Area Vessels.

7. Exceptional Vessels

Is this vessel or any part thereof in the above category?
Yes_____ No X

If "Yes", follow the requirements for an Extended Engineering Note for Exceptional Vessels.

THIS VESSEL CONFORMS TO FERMILAB ES&H MANUAL CHAPTER 5031

Vessel Title _____

Vessel Number _____

Vessel Drawing Number _____

Maximum Allowable Working Pressures (MAWP):

Internal Pressure _____

External Pressure _____

Working Temperature Range _____ ^{0}F _____ ^{0}F

Contents _____

Designer _____

Test Pressure (if tested at Fermi) DATE ___/___/____

_____PSIG, Hydraulic _____ Pneumatic _____

Accepted as conforming to standard by

_____

Of Division/Section _____

NOTE: Any subsequent changes in content, pressures, temperatures, valving, etc., which affect the safety of this vessel shall require another review and test.

Figure 2. Sample of sticker to be completed and be placed on vessel.

T962 TPC Liquid Argon Cryostat Relief Device Sizing Calculations

R Sanders

April 14, 2008

(1.0) Introduction

This document presents calculations to size the relief device of the T962 TPC Liquid Argon Cryostat for the PPD1014 pressure vessel engineering note. This vessel will be located in the Minos Hall.

(2.0) General Information

(2.1) Fluid Properties

From ASME Boiler Pressure Vessel Code, Section VIII Div I, Appendix 11. Capacity Conversions For Safety Valves, Example #4, the density of dry air at 60F 14.7 psia is:

```
RhoStdAir  =  0.0766**(lb/ft^3)      (density of air at standard conditions)
```

Maximum allowable working pressure of the cryostat.

```
MAWP  =  30**psig      ( cryostat maximum allowable pressure)
```

The relief device is a 1 1/2 inch UD stamped burst disc, Fike SRL model.

Dimensions and Surface Area Of Cryostat

The dimensions of argon cryostat inner vessel are needed to determine the surface area of the argon cryostat:

```
InnerOD  =  30**in      (outside diameter of inner vessel)
Convert(ToFt)InnerOD
InnerOD  =  2.5**ft
```

From PHPK DRW # 07-2032-6501, SHEET 2 of :

```
InnerL  =  (799/16)**in      (overall length of inner vessel)
InnerL  =  49.9375**in
Convert(ToFt)InnerL
InnerL  =  4.1614583333**ft
```

The inner vessel neck is 18 in pipe.

```
NeckOD  =  18**in      (outside diameter of 18  pipe)
Convert(ToFt)NeckOD
NeckOD  =  1.5**ft
```

From PHPK DRW # 07-2032-6500, SHEET 4 of 5

```
NeckL  =  15.5**in      (length of vacuum insulated portion of neck)
Convert(ToFt)NeckL
NeckL  =  1.2916666666**ft
```

Thickness of MLI insulation layer:

```
InsT  =  0.5**in      (insulation thickness)
Convert(ToFt)InsT
InsT  =  0.4166666666e-1**ft
```

Inner most area of insulation.

```
CylArea  =  Pi*InnerOD*InnerL+2*Pi*InnerOD^2/4
CylArea  =  0.4250149436e2**(ft^2)
NeckArea  =  Pi*NeckOD*NeckL
NeckArea  =  6.0868357663**(ft^2)
InnerArea  =  CylArea+NeckArea
InnerArea  =  48.5883301294**(ft^2)
```

Outer most area of insulation.

```
CylAreaO  =  Pi*(InnerOD+InsT)*(InnerL+InsT)+2*Pi*(InnerOD+InsT)^2/4
CylAreaO  =  0.4370890768e2**(ft^2)
NeckAreaO  =  Pi*(NeckOD+InsT)*NeckL
NeckAreaO  =  6.2559145376**(ft^2)
OuterArea  =  CylAreaO+NeckAreaO
OuterArea  =  49.9648222229**(ft^2)
```

Arithmetical mean of the area of insulation:

```
InsArea  =  (InnerArea+OuterArea)/2
InsArea  =  0.4927657617e2**(ft^2)
```

(3.0)Relief Conditions

There are only three ways to add heat to the cryostat, causing liquid argon to boil or to raise the pressure; fire, loss of vacuum and internal electric heater. The cryostat is designed so that there is no way to flow warm argon gas or other fluids to heat up the liquid argon. The three cases are discussed below.

The calculations below, uses equations from CGA S-1.3 --1995

(3.1) Fire Condition

The mean thermal conductivity of air and argon between 1200F and Saturation temperature from CGA S-1.3 p32, Table 3 are:

```
khotair  =  0.024573**(BTU/(hr*ft*F))
khotar  =  0.015812**(BTU/(hr*ft*F))
```

Determine the overall heat transfer coefficient using the higher thermal conductivity of air.

```
U  =  khotair/InsT
U  =  0.589752**(BTU/(hr*ft^2*F))
```

Calculate the required relief valve capacity as per CGA S-1.3, section 5.3.3. To be consistent with the CGA method of calculations, make A non-dimensional variable equaling the number of square feet of surface.

```
A  =  InsArea/1**ft^2
A  =  0.4927657617e2
Ff  =  1.0      (correction factor)
```

From CGA S-1.3, Table 1, for argon:

```
Gi  =  10.2**((ft^5*hr*F)/(BTU*min))
```

The so called required flow capaity is:

```
Qa  =  Ff*Gi*U*A^0.82
Qa  =  0.1469720745e3**(ft^3/min)
```

Fire relief capacity found to be 147 SCFM Air

As per CGA 5.3 (c), reduce the required flow capacity Qa to 30% of its value because of the fire protection sprinkler system in the cavern. Qa is the stamped capacity on a relief device in standard cubic feet of air.

```
Qa  =  0.3*Qa
Qa  =  0.4409162236e2**(ft^3/min)
```

(3.2) Fire Condition Required Mass Flow Rate

The required stamped capacity is applicable to the case when the relief device inlet is close to the cryostat and the relief device discharges directly to atmosphere. The T962 cryostat will have a very long exhaust vent pipe carrying the vapor to the outdoor atmosphere on the surface. The required mass flow rate will be found following procedures from ASME Boiler Pressure Vessel Code, Section VIII Div I, Appendix 11. Capacity Conversions For Safety Valves.

Determine required value of KvAb (Kv * Ab) of a relief device that has stamped capacity Qa.

```
Wa  =  Qa*RhoStdAir      (mass flow rate of air)
Wa  =  0.0337741827e2**(lb/min)
Convert(ToHr)Wa
Wa  =  0.2026450963e3**(lb/hr)
Mair  =  28.97      (molecular weight)
Ta  =  520**R      (temperature)
P  =  14.7**psia+1.1*MAWP      (inlet abso;ute pressure, 10% over MAWP)
P  =  0.477e2**psia
C  =  356
C  =  356**((R^0.5*lb)/(hr*in^2*psia))
```

Find KvAb (flow coefficient Kv times flow area Ab).

```
KvAb  =  Wa/(C*P)*(Ta/Mair)^0.5
KvAb  =  0.5055861242e-1**(in^2)
```

Next determine mass flow rate of argon vapor through the same valve at an inlet pressure of 121% of the MAWP

```
Pf  =  1.21*MAWP+14.7**psia
Pf  =  0.51e2**psia
```

At that pressure, the saturation temperature is

```
Tf  =  101.05**K
Tf  =  Tf*(9/5)**(R/K)
Tf  =  0.18189e3**R
Mar  =  39.944      (molecular weight of argon)
```

for argon ,

```
C  =  378**((R^0.5*lb)/(hr*in^2*psia))
```

The mass flow rate for the fire condition is:

```
Wf  =  KvAb*C*Pf*(Mar/Tf)^0.5
Wf  =  0.4567499276e3**(lb/hr)
```

The relief system must be designed to handle the mass flow rate of argon Wf.

ASME Boiler Pressure Vessel Code Section VIII, DIVISION 1, UG127 (a)(2)(b) requires the calculated relieving capacity be multiplied by 0.9 to account for uncertainty in flow resistance methods of calculation. The approach taken here is to assume a flow rate and calculate the pressure drop in the vent piping. So, to be consistent with the ASME UG127 requirement, the assumed flow rate will be the required flow rate divided by 0.9.

```
Wf  =  Wf/0.9
Wf  =  507.4999196497**(lb/hr)
```

(3.3) Loss Of Vacuum Condition

```
Pv  =  14.7**psia+1.1*MAWP      (inlet absolute pressure, 10% over MAWP)
Pv  =  0.477e2**psia
```

At that pressure, the saturation temperature is

```
Tv  =  100.99**K
Tv  =  Tv*(9/5)**(R/K)
Tv  =  0.181782e3**R
```

The thermal conductivity of air and argon at 100 F, from NIST are:

```
kair  =  0.015486**(BTU/(hr*ft*F))
kar  =  0.010624**(BTU/(hr*ft*F))
```

Determine the overall heat transfer coefficient using the higher thermal conductivity of air.

```
U  =  kair/InsT
U  =  0.371664**(BTU/(hr*ft^2*F))
Qa  =  (590**R-Tv)/(4*(1660**R-Tv))*Ff*Gi*U*A^0.82
Qa  =  6.3945438708**(ft^3/min)
```

(3.4) Loss of Vacuum Condition Required Mass Flow Rate

The same as for the fire condition determine required value of KvAb (Kv * Ab) of a relief device that has stamped capacity Qa.

```
Wa  =  Qa*RhoStdAir      (mass flow rate of air)
Wa  =  0.4898220605**(lb/min)
Convert(ToHr)Wa
Wa  =  0.2938932363e2**(lb/hr)
Mair  =  28.97      (molecular weight)
Ta  =  520**R      (temperature)
P  =  14.7**psia+1.1*MAWP      (inlet abso;ute pressure, 10% over MAWP)
P  =  0.477e2**psia
C  =  356**((R^0.5*lb)/(hr*in^2*psia))
```

Find KvAb (flow coefficient Kv times flow area Ab).

```
KvAb  =  Wa/(C*P)*(Ta/Mair)^0.5
KvAb  =  0.7332442035e-2**(in^2)
```

for argon ,

```
C  =  378**((R^0.5*lb)/(hr*in^2*psia))
```

The mass flow rate for the loss of vacuum condition is:

```
Wv  =  KvAb*C*Pv*(Mar/Tv)^0.5
Wv  =  0.6197394683e2**(lb/hr)
```

The required mass flow rate for the loss of vacuum is significantly smaller than for the fire case.

(3.5) Cryostat Heater Case

The only other method of adding heat to the cryostat is through its heater HTR-15-AR. The maximum heat output of the heater is:

```
Qhtr  =  350**W
```

At saturated conditions and 110% over the MAWP, the temperature and pressure for the heater case is:

```
Ph  =  14.7**psia+1.1*MAWP      (inlet absoute pressure, 10% over MAWP)
Ph  =  0.477e2**psia
Th  =  100.99**K
Th  =  Th*(9/5)**(R/K)
Th  =  0.181782e3**R
```

At these flow conditions the saturated liquid and vapor enthalpies are:

```
hf  =  (-0.102829e3)**(kJ/kg)      (liquid  enthalpy)
hg  =  47.4446**(kJ/kg)      (vapor  enthalpy)
```

The required vent rate is the boil-off:

```
Wh  =  Qhtr/(hg-hf)
Wh  =  2.3290850821**((W*kg)/kJ)
Convert({ToJ,ToJS,ToLb,ToHr})Wh
Wh  =  18.4851119545**(lb/hr)
```

The mass flow rate for the heater case is significantly smaller than for the loss of vacuum case.

(4.0) Vent System Pressure Drop

Only the calculations for the fire case will be presented. The fire case has the largest mass flow rate of the three failure cases. As well the argon temperature in the entire length of vent system is assumed to be 1200 F. This is perhaps not realistic, but it makes the calculations simpler.

For the calculations the vent system is divided into five sections, 1 1/2 inch pipe run off the exhaust of the cryostat, a 2 inch ID flexible hose, a long 4 inch horizontal pipe run in the MINOS Hall, 6" diameter vertical pipe that carrries the argon to the surface, and last a 3 inch carbon steel pipe run in the MINOS Assembly Hall. The calculations uses the following defined process points:

Point 1: The exhaust to the atmosphere from the 3 inch pipe on the surface

Point 2: Transition, on the surface, from the 3 inch pipe in the assembly hall to the 6 inch vertical pipe.

Point 3: transition from the bottom of the 6 inch pipe to the 4 inch pipe near the lower elevator foyer.

Point 4: transition from the 4 inch pipe to the 2" flexible hose near the MINOS detector.

Point 5: transition from the 2 inch flexible hose to a short run of 1 1/2 inch pipe.

Point 6: The cryostat inner vessel.

The procedure of the calculations is to assume the maximum required mass flow rate of Wf and start at point 1 , atmospheric pressure. The flow conditions at point 1 are determined, and the presure drop in the next section of piping is calculated. The pressure at point 2 is found and the process repeated until the pressure of the cryostat at point 6 is found. This method of calculated is used because it involves no iteration.

(4.1) Minos Assembly Hall Pipe Run.

Start at point 1 on the surface. The mass flow rate is:

```
w[1]  =  Wf
w[1]  =  507.4999196497**(lb/hr)
```

To simplify the calculations, start the calculations at the exhaust of the pipe and assume the argon temperature to be 1200 F.

Fluid properties

```
T[1]  =  (460+1200)**R
T[1]  =  1660**R
```

The pressure is atmospheric. Atmospheric pressure at Fermilab is:

```
p[1]  =  14.3**psia
```

The density and viscosity of the argon is:

```
rho[1]  =  3.207e-2**(lb/ft^3)
mu[1]  =  3.54277e-5**(lb/(ft*s))
```

Piping Description

Pipe length

```
Le[1]  =  111**ft
```

Number of long radius 90 degree weld elbows:

```
nel90  =  11
```

Assume 5 45 degree weld elbows:

```
nel45  =  2
```

Pipe size

```
od[1]  =  3.500**in      (outside diameter 3 in pipe)
wall[1]  =  0.216**in      (wall thickness 3 in sch 40 pipe)
Convert(ToFt)od[1]
od[1]  =  0.2916666666**ft
Convert(ToFt)wall[1]
wall[1]  =  0.18e-1**ft
```

Internal diameter and flow area

```
id[1]  =  od[1]-2*wall[1]      (internal diameter)
id[1]  =  0.2556666666**ft
a[1]  =  Pi*id[1]^2/4      (flow area)
a[1]  =  0.5133790001e-1**(ft^2)
```

K factors

Determine velocity, Reynolds number and friction factor.

```
v[1]  =  w[1]/(a[1]*rho[1])      (velocity)
v[1]  =  0.3082470422e6**(ft/hr)
Convert(ToSec)v[1]
v[1]  =  85.6241784044**(ft/s)
Re[1]  =  id[1]*v[1]*rho[1]/mu[1]      (Reynolds number)
Re[1]  =  0.1981648067e5
epsilon  =  0.00015**ft      (commercial steel pipe roughness)
f[1]  =  FrictionFactor3(Re[1],epsilon,id[1])      (friction factor)
f[1]  =  0.2723287878e-1
```

K Factors

The K factor due to straight pipe length:

```
Kle  =  f[1]*Le[1]/id[1]
Kle  =  11.8234010897
```

From Crane Tech Paper 410, page A-29, rhe K factor for each 90 degree elbow is:

```
kel  =  15.4*f[1]
kel  =  0.4193863333
```

Assume the K factor for 45 degree elbow is half that of 90 degree elbow:

```
kel45  =  7.9*f[1]
kel45  =  0.2151397424
```

Assume a sharp edged entrance and exit pressure drops in this section of the pipe system.

```
Kin  =  0.5
Kout  =  1.0
```

The total K factor is:

```
Kt  =  Kin+Kout+Kle+nel90*kel+nel45*kel45
Kt  =  18.3669302409
```

Pressure Drop

Find the pressure drop.

```
dp[1]  =  Kt*rho[1]*v[1]^2/(2*gc)      (pressure drop)
dp[1]  =  0.6711093938e2**(lbf/ft^2)
Convert({ToIn,{lbf<-psi*in^2}})dp[1]
dp[1]  =  0.4660481901**psi
```

(4.2) Pressure Drop in vertical pipe, Section 2

pressure at point 2

```
p[2]  =  p[1]+dp[1]
p[2]  =  0.1476604819e2**psia
```

Mass flow rate.

```
w[2]  =  Wf
w[2]  =  507.4999196497**(lb/hr)
T[2]  =  (460+1200)**R
T[2]  =  1660**R
```

The density and viscosity of the argon is:

```
rho[2]  =  3.337e-2**(lb/ft^3)
mu[2]  =  3.54231e-5**(lb/(ft*s))
```

Piping Description

Pipe length

```
Le[2]  =  350**ft
```

Number of long radius 90 degree weld elbows:

```
nel90  =  0
```

Number of long radius 45 degree weld elbows:

```
nel45  =  0
```

Pipe size

```
od[2]  =  6.625**in      (outside diameter 6 in pipe)
wall[2]  =  0.280**in      (wall thickness 6 in sch 40 pipe)
Convert(ToFt)od[2]
od[2]  =  0.5520833333**ft
Convert(ToFt)wall[2]
wall[2]  =  0.2333333333e-1**ft
```

Internal diameter and flow area

```
id[2]  =  od[2]-2*wall[2]      (internal diameter)
id[2]  =  0.5054166666**ft
a[2]  =  Pi*id[2]^2/4      (flow area)
a[2]  =  0.2006268247**(ft^2)
```

K factors

Determine velocity, Reynolds number and friction factor.

```
v[2]  =  w[2]/(a[2]*rho[2])      (velocity)
v[2]  =  0.7580376411e5**(ft/hr)
Convert(ToSec)v[2]
v[2]  =  21.0566011421**(ft/s)
Re[2]  =  id[2]*v[2]*rho[2]/mu[2]      (Reynolds number)
Re[2]  =  0.1002553301e5
epsilon  =  0.00015**ft      (commercial steel pipe roughness)
f[2]  =  FrictionFactor3(Re[2],epsilon,id[2])      (friction factor)
f[2]  =  0.3132426243e-1
```

K Factors

The K factor due to straight pipe length:

```
Kle  =  f[2]*Le[2]/id[2]
Kle  =  21.6919871745
```

Assume a sharp edged exit for the exit pressure drops in this section of the pipe system. The entrance pressure drop was accounted for in the previous section.

```
Kout  =  1.0
```

The total K factor is:

```
Kt  =  Kout+Kle
Kt  =  22.6919871745
```

Pressure Drop

Find the pressure drop.

```
dp[2]  =  Kt*rho[2]*v[2]^2/(2*gc)      (pressure drop)
dp[2]  =  5.2175933074**(lbf/ft^2)
Convert({ToIn,{lbf<-psi*in^2}})dp[2]
dp[2]  =  0.3623328685e-1**psi
```

dp[2] is just the frictional pressure drop and does not include the pressure change due to the change in elevation.

(4.3) MINOS Hall 4 inch Pipe Pressure Drop, Section 3

The pressure at the entrance of setion 3 is

```
p[3]  =  p[2]+dp[2]+Le[2]*rho[2]*g/gc
p[3]  =  14.802281477**psia+0.116795e2**(lbf/ft^2)
Convert({ToIn,{lbf<-psi*in^2}})p[3]
p[3]  =  14.8833891159**psia
```

Mass flow rate.

```
w[3]  =  Wf
w[3]  =  507.4999196497**(lb/hr)
```

To simplify the calculations, assume the argon temperature to be 1200 F.

Fluid properties

```
T[3]  =  (460+1200)**R
T[3]  =  1660**R
```

The density and viscosity of the argon is:

```
rho[3]  =  3.738e-2**(lb/ft^3)
rho[3]  =  3.738e-2**(lb/ft^3)
mu[3]  =  3.54232e-5**(lb/(ft*s))
mu[3]  =  3.54232e-5**(lb/(ft*s))
```

Piping Description

Pipe length

```
Le[3]  =  313**ft
```

Number of long radius 90 degree weld elbows:

```
nel90  =  6
```

Number of 45 degree long radius weld elbows:

```
nel45  =  2
```

Pipe size

```
od[3]  =  4.500**in      (outside diameter 4 in pipe)
wall[3]  =  0.120**in      (wall thickness 4 in sch 10 pipe)
Convert(ToFt)od[3]
od[3]  =  0.375**ft
Convert(ToFt)wall[3]
wall[3]  =  1.e-2**ft
```

Internal diameter and flow area

```
id[3]  =  od[3]-2*wall[3]      (internal diameter)
id[3]  =  0.355**ft
a[3]  =  Pi*id[3]^2/4      (flow area)
a[3]  =  0.9897980354e-1**(ft^2)
```

Flex Hoses

There are two 4 inch internal diameter with lengths:

```
dflex  =  4.0**in
Lflex1  =  3.5**ft
Lflex2  =  5.5**ft
```

Multiply the total length of the flex hoses to account for the increased pressure drop caused by the internal corrugated interior surface.

```
Lflex  =  3*(Lflex1+Lflex2)
Lflex  =  27.**ft
```

Flex hose flow area:

```
aflex  =  dflex^2*Pi/4
aflex  =  0.1256637061e2**(in^2)
```

K factors

Determine velocity, Reynolds number and friction factor.

```
v[3]  =  w[3]/(a[3]*rho[3])      (velocity)
v[3]  =  0.1371671431e6**(ft/hr)
Convert(ToSec)v[3]
v[3]  =  38.1019841949**(ft/s)
Re[3]  =  id[3]*v[3]*rho[3]/mu[3]      (Reynolds number)
Re[3]  =  0.1427340048e5
epsilon  =  0.000005**ft      (drawn tubing roughness)
f[3]  =  FrictionFactor3(Re[3],epsilon,id[3])      (friction factor)
f[3]  =  0.2818365075e-1
```

The K factor due to straight pipe length:

```
Kle  =  f[3]*Le[3]/id[3]
Kle  =  24.8492470031
```

From Crane Tech Paper 410, page A-29, the K factor for each 90 degree elbow is:

```
kel  =  20.0*f[3]
kel  =  0.563673015
```

Assume the K factor for 45 degree elbow is half that of 90 degree elbow:

```
kel45  =  10.0*f[3]
kel45  =  0.2818365075
```

The entrance and exit K factors are accounted for in adjacent sections

```
Kout  =  1.0
```

Flex Hose K factor

Determine velocity, Reynolds number and friction factor.

```
vflex  =  w[3]/(aflex*rho[3])      (velocity)
vflex  =  1080.4055755884**(ft^3/(hr*in^2))
Convert({ToSec,ToFt})vflex
vflex  =  43.2162230235**(ft/s)
Reflex  =  dflex*vflex*rho[3]/mu[3]      (Reynolds number)
Reflex  =  0.1824140582e6**(in/ft)
Convert(ToFt)Reflex
Reflex  =  0.1520117151e5
epsilon  =  0.00015**ft      (commercial steel pipe roughness)
fflex  =  FrictionFactor3(Reflex,epsilon,dflex)      (friction factor)
fflex  =  0.2859032853e-1
```

The flexible hose K factor:

```
Kflex  =  fflex*Lflex/dflex
```

```
Kflex  =  0.1929847176**(ft/in)
```

Use Crane Tech Paper 410, formula 3-24 to converted the K factor for 4 inch pipe.

```
Kflex  =  Kflex*(id[3]/dflex)^4
Kflex  =  0.1197281758e-4**(ft^5/in^5)
Convert(ToFt)Kflex
Kflex  =  2.979220145
```

Pressure Drop

The total K factor is:

```
Kt  =  Kle+nel90*kel+nel45*kel45+Kflex
Kt  =  31.7741782537
```

Find the pressure drop.

```
dp[3]  =  Kt*rho[3]*v[3]^2/(2*gc)      (pressure drop)
dp[3]  =  0.2679623368e2**(lbf/ft^2)
Convert({ToIn,{lbf<-psi*in^2}})dp[3]
dp[3]  =  0.1860849561**psi
```

(4.4) MINOS Hall 2 inch Flex Hose Pressure Drop, Section 4

Section 4 is a 35 foot long 2" flex hose with a reducer on its inlet. The pressure at the entrance of section 4 is

```
p[4]  =  p[3]+dp[3]
p[4]  =  15.0694740721**psia
Convert({ToIn,{lbf<-psi*in^2}})p[4]
p[4]  =  15.0694740721**psia
```

Mass flow rate.

```
w[4]  =  Wf
w[4]  =  507.4999196497**(lb/hr)
```

To simplify the calculations, assume the argon temperature to be 1200 F.

Fluid properties

```
T[4]  =  (460+1200)**R
T[4]  =  1660**R
```

The density and viscosity of the argon is:

```
rho[4]  =  3.379e-2**(lb/ft^3)
mu[4]  =  3.54233e-5**(lb/(ft*s))
```

Flex Hose

There are two 4 inch internal diameter with lengths:

```
dflex  =  2.0**in
Lflex  =  35**ft
```

Multiply the length of the flex hose by 3 to account for the increased pressure drop caused by the internal corrugated interior surface.

```
Lflex  =  3*Lflex
Lflex  =  105**ft
```

Flex hose flow area:

```
aflex  =  dflex^2*Pi/4
aflex  =  3.1415926537**(in^2)
```

Flex Hose K factor

Determine velocity, Reynolds number and friction factor.

```
vflex  =  w[4]/(aflex*rho[4])      (velocity)
vflex  =  4780.7706913876**(ft^3/(hr*in^2))
Convert({ToSec,ToFt})vflex
vflex  =  191.2308276555**(ft/s)
Reflex  =  dflex*vflex*rho[4]/mu[4]      (Reynolds number)
Reflex  =  0.3648270865e6**(in/ft)
Convert(ToFt)Reflex
Reflex  =  0.304022572e5
epsilon  =  0.00015**ft      (commercial steel pipe roughness)
fflex  =  FrictionFactor3(Reflex,epsilon,dflex)      (friction factor)
fflex  =  0.2575627596e-1
```

The flexible hose K factor:

```
Kflex  =  fflex*Lflex/dflex
Kflex  =  1.3522044881**(ft/in)
Convert(ToFt)Kflex
Kflex  =  16.2264538579
```

Pressure Drop

The K factor for the reducer is:

```
Kred  =  0.15
```

The total K factor is:

```
Kt  =  Kred+Kflex
Kt  =  0.1637645385e2
```

Find the pressure drop.

```
dp[4]  =  Kt*rho[4]*vflex^2/(2*gc)      (pressure drop)
dp[4]  =  0.3144769464e3**(lbf/ft^2)
Convert({ToIn,{lbf<-psi*in^2}})dp[4]
dp[4]  =  2.1838676837**psi
```

(4.5) MINOS Hall 1 1/2 inch Pipe Pressure Drop, Section 5

The pressure at the entrance of setion 3 is

```
p[5]  =  p[4]+dp[4]
p[5]  =  17.2533417558**psia
Convert({ToIn,{lbf<-psi*in^2}})p[5]
p[5]  =  17.2533417558**psia
```

Mass flow rate.

```
w[5]  =  Wf
w[5]  =  507.4999196497**(lb/hr)
```

To simplify the calculations, assume the argon temperature to be 1200 F.

Fluid properties

```
T[5]  =  (460+1200)**R
T[5]  =  1660**R
```

The density and viscosity of the argon is:

```
rho[5]  =  3.803e-2**(lb/ft^3)
mu[5]  =  3.54232e-5**(lb/(ft*s))
```

Piping Description

Pipe length

```
Le[5]  =  6**ft
```

Number of long radius 90 degree weld elbows:

```
nel90  =  2
```

Pipe size

```
od[5]  =  1.900**in      (outside diameter 1 1/2 in pipe)
wall[5]  =  0.109**in      (wall thickness 1 1/2 in sch 10 pipe)
Convert(ToFt)od[5]
od[5]  =  0.1583333333**ft
Convert(ToFt)wall[5]
wall[5]  =  0.9083333333e-2**ft
```

Internal diameter and flow area

```
id[5]  =  od[5]-2*wall[5]      (internal diameter)
id[5]  =  0.1401666666**ft
a[5]  =  Pi*id[5]^2/4      (flow area)
a[5]  =  0.1543047773e-1**(ft^2)
```

K factors

Determine velocity, Reynolds number and friction factor. Some of the fittings in this section of piping have a larger diameter than 1 1/2 inch sch 10 pipe. It will be conservatively assumed that all fittings are 1 1/2 pipe.

```
v[5]  =  w[5]/(a[5]*rho[5])      (velocity)
v[5]  =  0.8648290716e6**(ft/hr)
```

```
Convert(ToSec)v[5]
v[5]  =  240.230297685**(ft/s)
Re[5]  =  id[5]*v[5]*rho[5]/mu[5]      (Reynolds number)
Re[5]  =  0.3615022952e5
epsilon  =  0.00015**ft      (commercial steel pipe roughness)
f[5]  =  FrictionFactor3(Re[5],epsilon,id[5])      (friction factor)
f[5]  =  0.2544279007e-1
```

The K factor due to straight pipe length:

```
Kle  =  f[5]*Le[5]/id[5]
Kle  =  1.0891087306
```

From Crane Tech Paper 410, page A-29, the K factor for each 90 degree elbow is:

```
kel  =  16.0*f[5]
kel  =  0.4070846411
```

The entrance K factor is for a sharp edged entrance into the pipe.

```
Kin  =  0.5
```

The Fike 1 1/2 inch SRL Burst Disc is code stamped with the following information:

MNFA 1.67 sq in.

KFGL .59

KRG .43

The argon passing through the burst disc will be vapor, so for the burst disc flow coeffient, use the KRG value.

```
Kr  =  0.43
```

Through tee K factor, Crane Tech Paper 410 p A29:

```
Kttee  =  20*f[5]
Kttee  =  0.5088558013
```

Branch tee K factor, Crane Tech Paper 410 p A29:

```
Kbtee  =  60*f[5]
Kbtee  =  1.5265674041
```

Pressure Drop

The total K factor is:

```
Kt  =  Kle+nel90*kel+Kr+Kttee+Kbtee+Kin
Kt  =  4.8687012184
```

Find the pressure drop.

```
dp[5]  =  Kt*rho[5]*v[5]^2/(2*gc)      (pressure drop)
dp[5]  =  0.166058058e3**(lbf/ft^2)
Convert({ToIn,{lbf<-psi*in^2}})dp[5]
```

```
dp[5]  =  1.1531809587**psi
```

(4.6) Cryostat Pressure

The cryostat pressure is:

```
p[6]  =  p[5]+dp[5]
p[6]  =  18.4065227145**psia
```

summarize the calculations

```
process point 1    pressure drop  = 0.4660481901**psi     pressure = 14.3**psia
process point 2    pressure drop  = 0.3623328685e-1**psi     pressure = 0.1476604819e2**psia
process point 3    pressure drop  = 0.1860849561**psi     pressure = 14.8833891159**psia
process point 4    pressure drop  = 2.1838676837**psi     pressure = 15.0694740721**psia
process point 5    pressure drop  = 1.1531809587**psi     pressure = 17.2533417558**psia
process point 6    pressure drop  = ---    pressure = 18.4065227145**psia
```

Determine the cryostat using atmospheric pressure (which is lower than in MINOS hall)

```
Pcryostat  =  p[6]-14.3**psia
Pcryostat  =  4.1065227147**psi
```

The maximum cryostat pressure for the fire case is less than its MAWP. Therefore the vent system is properly sized for all three cases: fire, loss of vacuum and heater power.

T962 TPC Liquid Argon Cryostat Relief Device Sizing Calculations

Amendment 1

Liquid Fill from 160L Argon Dewar

R Sanders

April 16, 2008

(1.0) Introduction

This document addresses the pressure safety aspects of filling the T962 Cryostat from a 160 L liquid argon dewar as per the flow schematic 9219.000-MD-444703. The 160 L dewars have a MAWP of 350 psig. The cryostat and associated cryogenic piping mounted on the cryostat has an MAWP of 30 psig and is protected by the 1 1/2 inch burst disc RD-01-Ar.

The fill line from the 160L dewar will be connected to the fill port MV-55-Ar on the neck of the cryostat. The fill line will have a design pressure of 350 psig and is capable of taking the full pressure of the 160 L dewar.

Please note, this method of filling, from the liquid withdraw port of a 160 L dewar, cannot use the valve MV-52-Ar, near the cryocooler, to fill the cryostat. The burst disc RD-01-Ar will not adequately protect the piping as it is too far away from MV-52-H.

(2.0) Restriction

The fill line from the 160 L dewar will have a 4 " long, 1/8" X 0.035" tube installed near the its liquid withdraw outlet. This length of tube will serve to restrict the flow of argon into the cryostat, keeping it at a pressure below 30 psig. This document will consider only this flow restriction, ignoring all other restrictions in the fill line.

Tube length, diameter and wall thickness are:

```
Le[1]  =  4**in
Convert(ToFt)Le[1]
Le[1]  =  0.3333333333**ft
od[1]  =  0.125**in      (outside diameter )
Convert(ToFt)od[1]
od[1]  =  0.1041666666e-1**ft
wall[1]  =  0.035**in      (wall thickness )
Convert(ToFt)wall[1]
wall[1]  =  0.2916666666e-2**ft
```

Find the internal diameter and flow area.

```
id[1]  =  od[1]-2*wall[1]      (internal diameter)
id[1]  =  0.4583333333e-2**ft
a[1]  =  Pi*id[1]^2/4      (flow area)
```

```
a[1]  =  0.1649881558e-4**(ft^2)
```

(3.0) Flow Conditions

The document T962 TPC Liquid Argon Relief Device Sizing Calculations, showed for the fire condition, the cryostat vent system able to handle a flow rate of 507.5 lb/hr of argon. The method of calculation employed in this document, is to assume a flow rate of 500 lb/hr, and calculate the pressure drop over the restriction. It will shown the pressure drop is so great that there is insufficient 160 L dewar pressure to drive the flow. Thus the cryostat is properly relieved for the case of filling from a 160 L dewar.

Call point 1 the 160 L dewar. The mass flow rate out of point 1 is:

```
w[1]  =  500**(lb/hr)
```

Assume the pressure in the 160 L dewar is at its maximum value:

```
p[1]  =  350**psig
p[1]  =  p[1]+14.3**psia
p[1]  =  0.3643e3**psia
```

Assume the flow to be 100% saturated liquid. In reality the large pressure drop through the flow restriction will cause a significant fraction of the liquid to vaporize. Assuming all liquid flow is conservative. The density and viscosity are:

```
rho[1]  =  63.41**(lb/ft^3)
mu[1]  =  0.507e-4**(lb/(ft*s))
```

(4.0) Calculate Pressure Drop

Determine velocity, Reynolds number and friction factor.

```
v[1]  =  w[1]/(a[1]*rho[1])      (velocity)
v[1]  =  0.4779247073e6**(ft/hr)
Convert(ToSec)v[1]
v[1]  =  132.7568631519**(ft/s)
Re[1]  =  id[1]*v[1]*rho[1]/mu[1]      (Reynolds number)
Re[1]  =  0.7610062427e6
epsilon  =  0.000005**ft      (drawn tubing roughness)
f[1]  =  FrictionFactor3(Re[1],epsilon,id[1])      (friction factor)
f[1]  =  0.2044661256e-1
```

The K factor due to straight pipe length:

```
Kle  =  f[1]*Le[1]/id[1]
Kle  =  1.4870263685
```

Assume a sharp edged entrance and exit pressure drops in this section of the pipe system.

```
Kin  =  0.5
Kout  =  1.0
Convert(ToIn)Kcv
Kcv  =  Kcv
```

The total K factor is:

```
Kt  =  Kin+Kout+Kle
Kt  =  2.9870263685
```

Find the pressure drop.

```
dp[1]  =  Kt*rho[1]*v[1]^2/(2*gc)       (pressure drop)
dp[1]  =  0.5187710361e5**(lbf/ft^2)
Convert({ToIn,{lbf<-psi*in^2}})dp[1]
dp[1]  =  0.360257664e3**psi
```

The 350 psig 160 L argon dewar does not have enough pressure to force 500 lb/hr of argon into the cryostat and therefore the cryostat relief system is properly sized for this case.

Cryostat Vacuum Relief Valve Sizing Calculation

R Sanders

April 26, 2008

Introduction

Determine the required size of the relief valve, SV-50-V, on the T962 Cryostat vacuum space as per CGA S-1.3 --1995, section 4.4.2.. The valve SV-50-V is a 2 inch Circle Seal 220B-16PP check valve in a vertical position with the spring removed.

Internal Vessel Volume

The first step is to find the water volume of the Cryostat internal vessel. The water volume is the quantity of water it can hold. The outside diameter and overall length of the internal vessel are, from PHPK drawing # 07-2032-6501, SHEET 2 :

```
InnerOD  =  30**in      (outside diameter of inner vessel)
Convert(ToFt)InnerOD
InnerOD  =  2.5**ft
InnerL  =  (799/16)**in      (overall length of inner vessel)
InnerL  =  49.9375**in
Convert(ToFt)InnerL
InnerL  =  4.1614583333**ft
```

The inner vessel neck is 18 in pipe.

```
NeckOD  =  18**in      (outside diameter of 18  pipe)
Convert(ToFt)NeckOD
NeckOD  =  1.5**ft
```

From PHPK DRW # 07-2032-6500, SHEET 4 of 5

```
NeckL  =  15.5**in      (length of vacuum insulated portion of neck)
Convert(ToFt)NeckL
NeckL  =  1.2916666666**ft
```

The water volume is:

```
V  =  InnerL*Pi*InnerOD^2/4+NeckL*Pi*NeckOD^2/4      (internal volume)
V  =  0.2271007423e2**(ft^3)
```

Required Discharge Area

Find the required discharge area, using the formula from CGA S-1.3, section 4.4.2.

```
rhoH2O  =  62.4**(lb/ft^3)      (density of water)
rda  =  0.24e-3**(in^2/lb)*V*rhoH2O      (required discharge area)
rda  =  0.3401060717**(in^2)
```

Available Discharge Area

A Circle Seal 220B-16PP was disassembled and the flow area measured. The flow through the relief valve first goes through holes in a moving poppet, then through an annular space and exits the valve through stationary holes in the valve body.

The poppet has four 1 inch diameter holes, the flow area for the poppet is:

```
Ap  =  4*1**in^2*Pi/4
Ap  =  3.1415926537**(in^2)
```

The annular space has a flow path of:

```
Aa  =  (3**in^2-2.25**in^2)*Pi/4
Aa  =  3.0925052682**(in^2)
```

After the annular space, the flow exits the valve, through six stationary 1 inch diameter holes with area:

```
Ae  =  6*1**in^2*Pi/4
Ae  =  4.7123889804**(in^2)
```

The flow path of the six holes are about 20% blocked so the flow area of the exit is

```
Ae  =  0.80*Ae
Ae  =  3.7699111843**(in^2)
```

To summarize, the relief valve has a discharge area of at least 3 square inches, about ten times greater than the required discharge area. The relief valve SV-50-V is adequately sized.

Appendix – Vessel Manufacturer Drawings and Documentation

NOZZLE SCHEDULE

MARK	SIZE	FUNCTION
N20	24" OD X .375" WALL TUBE	CHIMNEY
N21	1" OD X .065" WALL TUBE	PUMP-OUT PORT

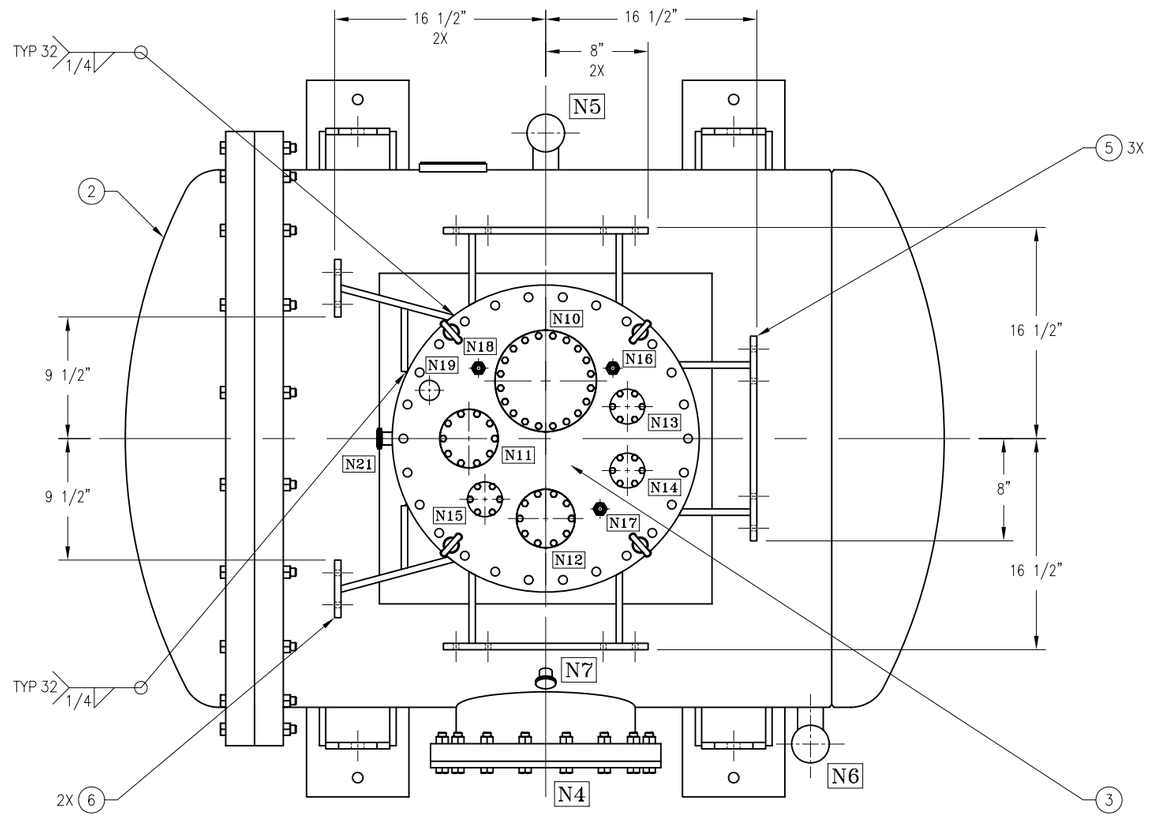

PLAN VIEW

SEE 07-2032-BM-6500 FOR BILL OF MATERIALS.

N/C	N/C	N/C	N/C	N/C	REV LETTER
5	4	3	2	1	SHEET NUMBER

INFORMATION SHOWN ON THIS DRAWING IS PROPRIETARY AND THE SOLE PROPERTY OF PHPK AND IS NOT TO BE DISCLOSED OR TRANSMITTED TO UNAUTHORIZED PARTIES.

–	07-2032	·	07-2032-6500	1	–	B
WEIGHT	COST CENTER	CONTRACT NO.	PART NUMBER	NO. REQ'D	NEXT ASSEMBLY	SIZE

DRAWN	CD	TOLERANCES	
CHECKED	SW	FRACTION	±1/16"
ENGINEER	SW	.XX	±.01
		.XXX	±.005
REVIEWED		ANGULAR	±5°
REL. DATE	12-10-07		3374
			EDR

DIMENSIONS ARE PROVIDED PRIOR TO SURFACE TREATMENTS UNLESS NOTED.

PHPK TECHNOLOGIES
2111 BUILDERS PLACE COLUMBUS, OHIO 43204

TITLE
YALE T962 CRYOSTAT
FINAL ASSY

SIZE	DRAWING NO.	CHG.
B	07-2032-6500 v3.40.15-51/158	N/C

SCALE 1=12 SHEET 1 OF 5

REVISIONS

CHG.	DATE	EDR	DWN.	CH'KD.	APP'D.	REV'D.	DESCRIPTION
–	–	–	–	–	–	·	–

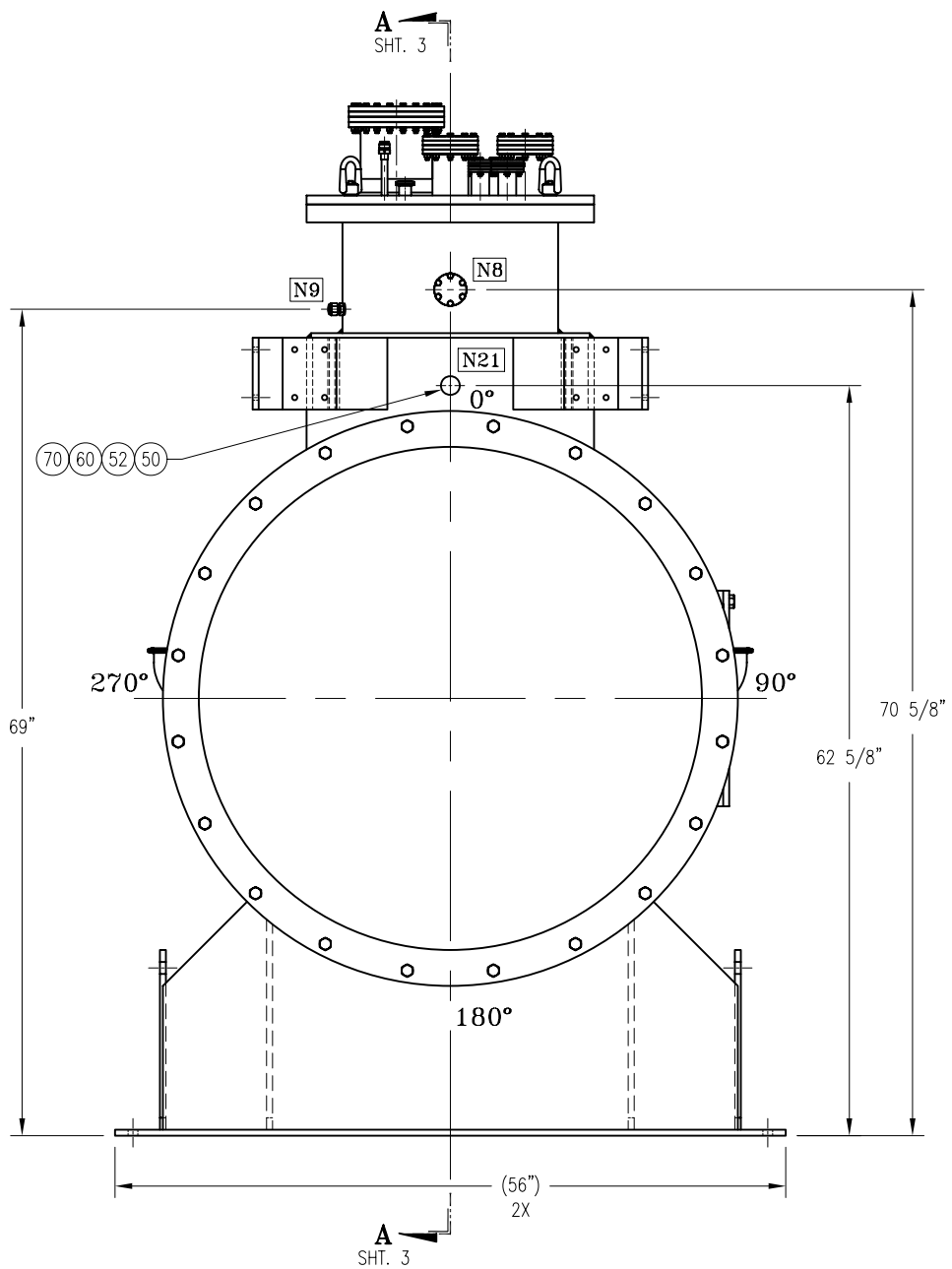

LEFT SIDE VIEW

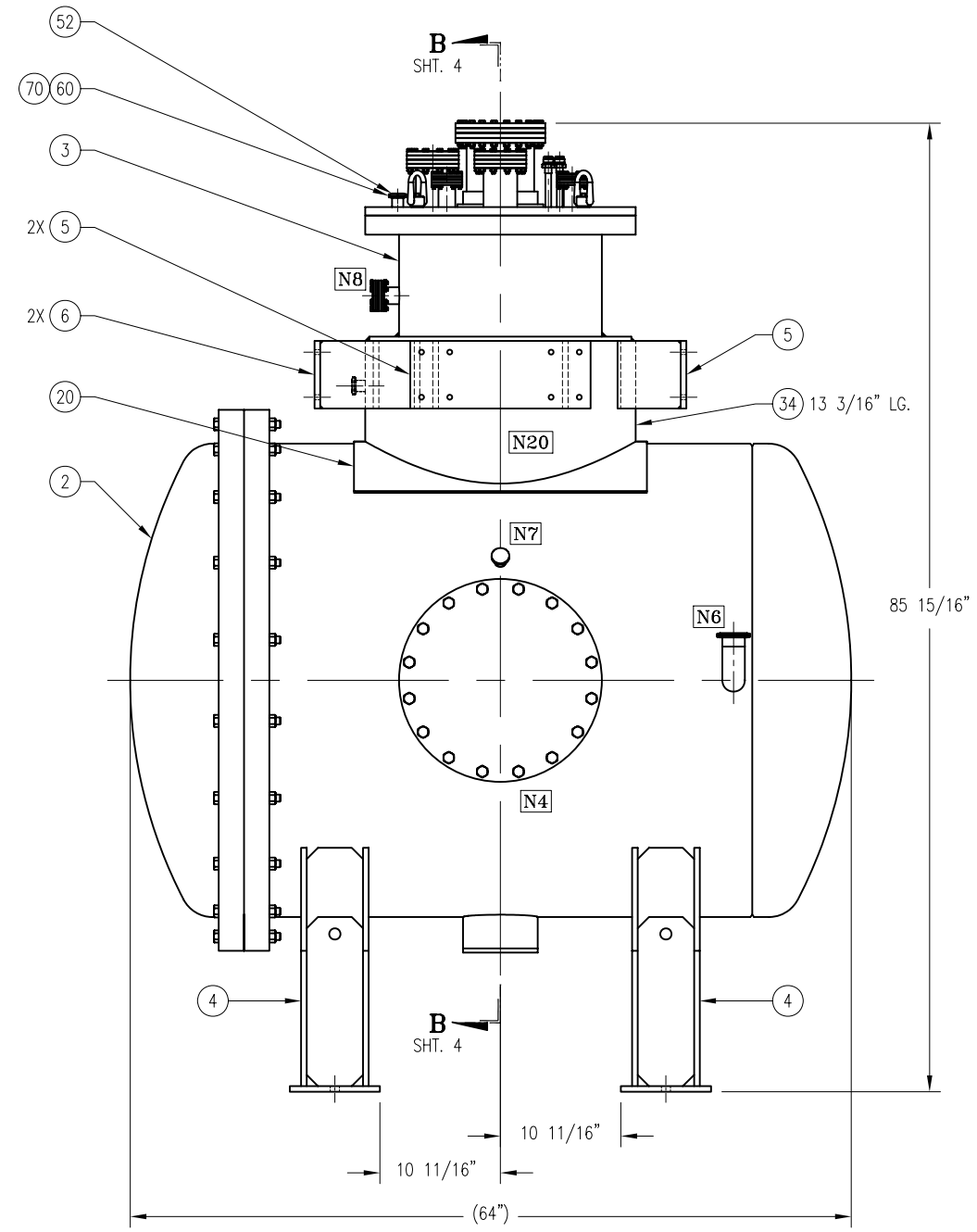

ELEVATION VIEW

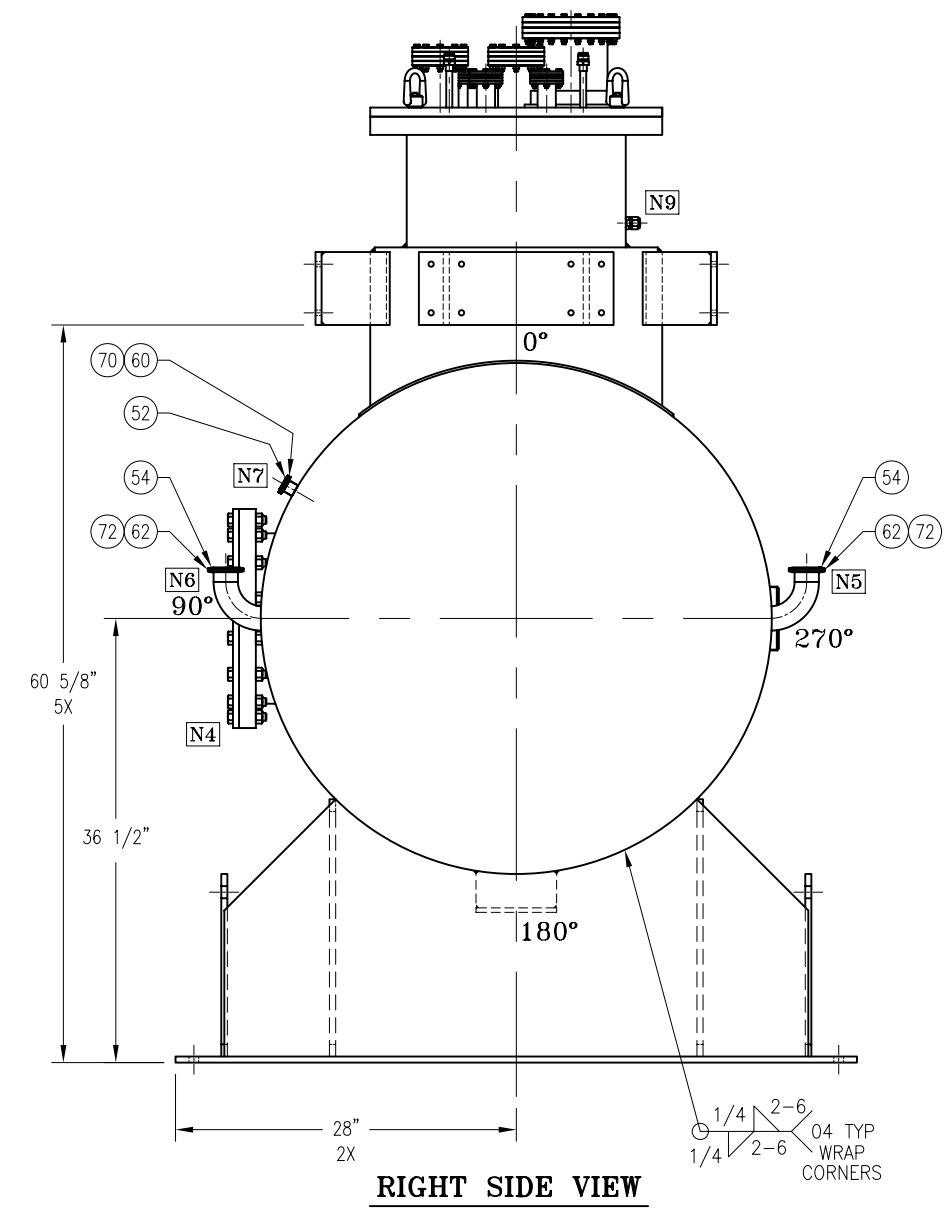

RIGHT SIDE VIEW

SEE 07-2032-BM-6500 FOR BILL OF MATERIALS.

REVISIONS							
CHG.	DATE	EDR	DWN.	CH'KD.	APP'D.	REV'D.	DESCRIPTION
.	.	.	.	.	.	.	.

–	07-2032	·	07-2032-6500	1	–	B
WEIGHT	COST CENTER	CONTRACT NO.	PART NUMBER	NO. REQ'D	NEXT ASSEMBLY	SIZE

DRAWN	CD	TOLERANCES	
CHECKED	SW	FRACTION	±1/16"
ENGINEER	SW	.XX	±.01
		.XXX	±.005
REVIEWED		ANGULAR	±5°
REL. DATE	12-10-07		3374
			EDR

DIMENSIONS ARE PROVIDED PRIOR TO SURFACE TREATMENTS UNLESS NOTED.

INFORMATION SHOWN ON THIS DRAWING IS PROPRIETARY AND THE SOLE PROPERTY OF PHPK AND IS NOT TO BE DISCLOSED OR TRANSMITTED TO UNAUTHORIZED PARTIES.

PHPK TECHNOLOGIES
2111 BUILDERS PLACE COLUMBUS, OHIO 43204

TITLE
YALE T962 CRYOSTAT
FINAL ASSY

SIZE	DRAWING NO.	CHG.
B	07-2032-6500	N/C

SCALE 1=16 SHEET 2 OF 5

v3.10.15 52/156

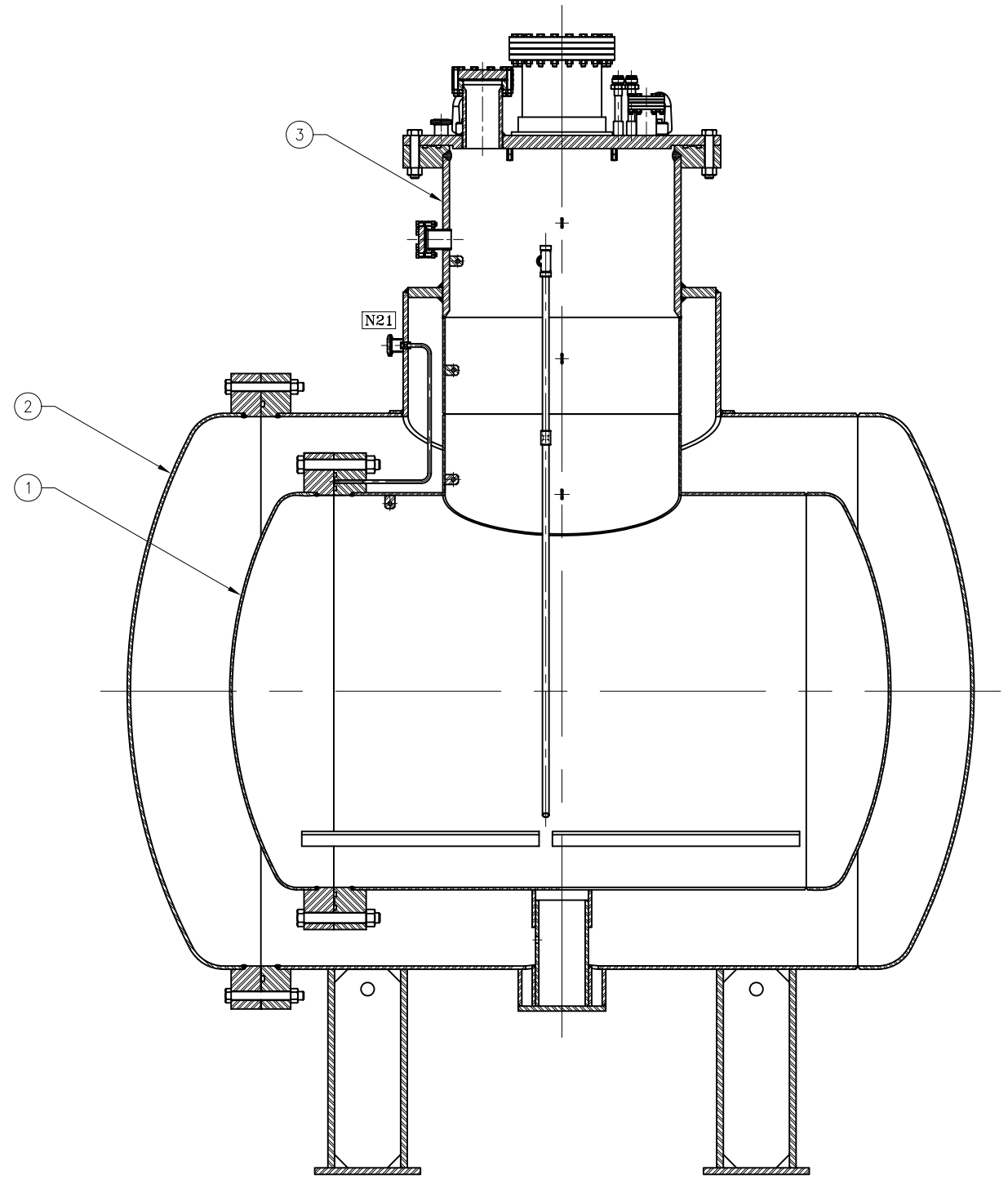

SECTION "A–A"

ITEMS 5 & 6 NOT SHOWN FOR CLARITY
(FROM SHT. 2)

SEE 07–2032–BM–6500 FOR BILL OF MATERIALS.

REVISIONS

CHG.	DATE	EDR	DWN.	CH'KD.	APP'D.	REV'D.	DESCRIPTION
–	–	–	–	–	–	·	–

–	07–2032	·	07–2032–6500	1	–	B
WEIGHT	COST CENTER	CONTRACT NO.	PART NUMBER	NO. REQ'D	NEXT ASSEMBLY	SIZE

DRAWN	CD	TOLERANCES	
CHECKED	SW	FRACTION	±1/16"
ENGINEER	SW	.XX	±.01
		.XXX	±.005
REVIEWED		ANGULAR	±5'
REL. DATE	12–10–07		3374
			EDR

DIMENSIONS ARE PROVIDED PRIOR TO SURFACE TREATMENTS UNLESS NOTED.

INFORMATION SHOWN ON THIS DRAWING IS PROPRIETARY AND THE SOLE PROPERTY OF PHPK AND IS NOT TO BE DISCLOSED OR TRANSMITTED TO UNAUTHORIZED PARTIES.

PHPK TECHNOLOGIES
2111 BUILDERS PLACE COLUMBUS, OHIO 43204

TITLE
YALE T962 CRYOSTAT
FINAL ASSY

SIZE	DRAWING NO.	CHG.
B	07–2032–6500	N/C

SCALE 1=12 SHEET 3 OF 5

v3.10.15 53/156

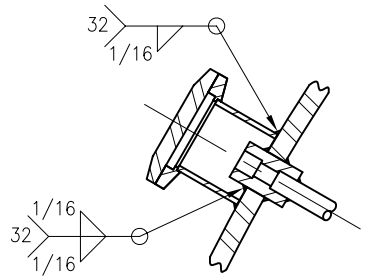

DETAIL "F"
SCALE: 5X

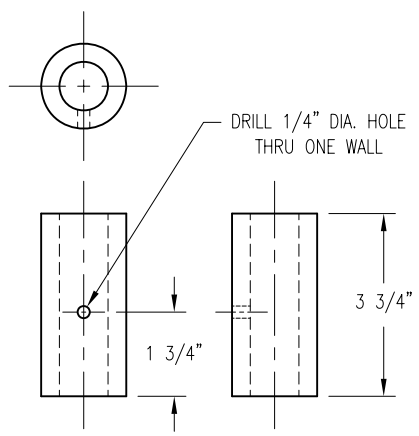

DETAIL, ITEM 42
2 REQ'D.
SCALE: 3X

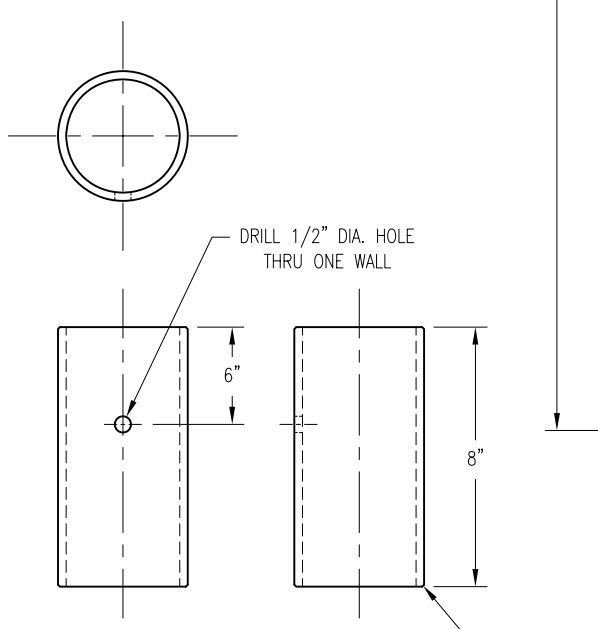

DETAIL, ITEM 44
1 REQ'D.
SCALE: 2X

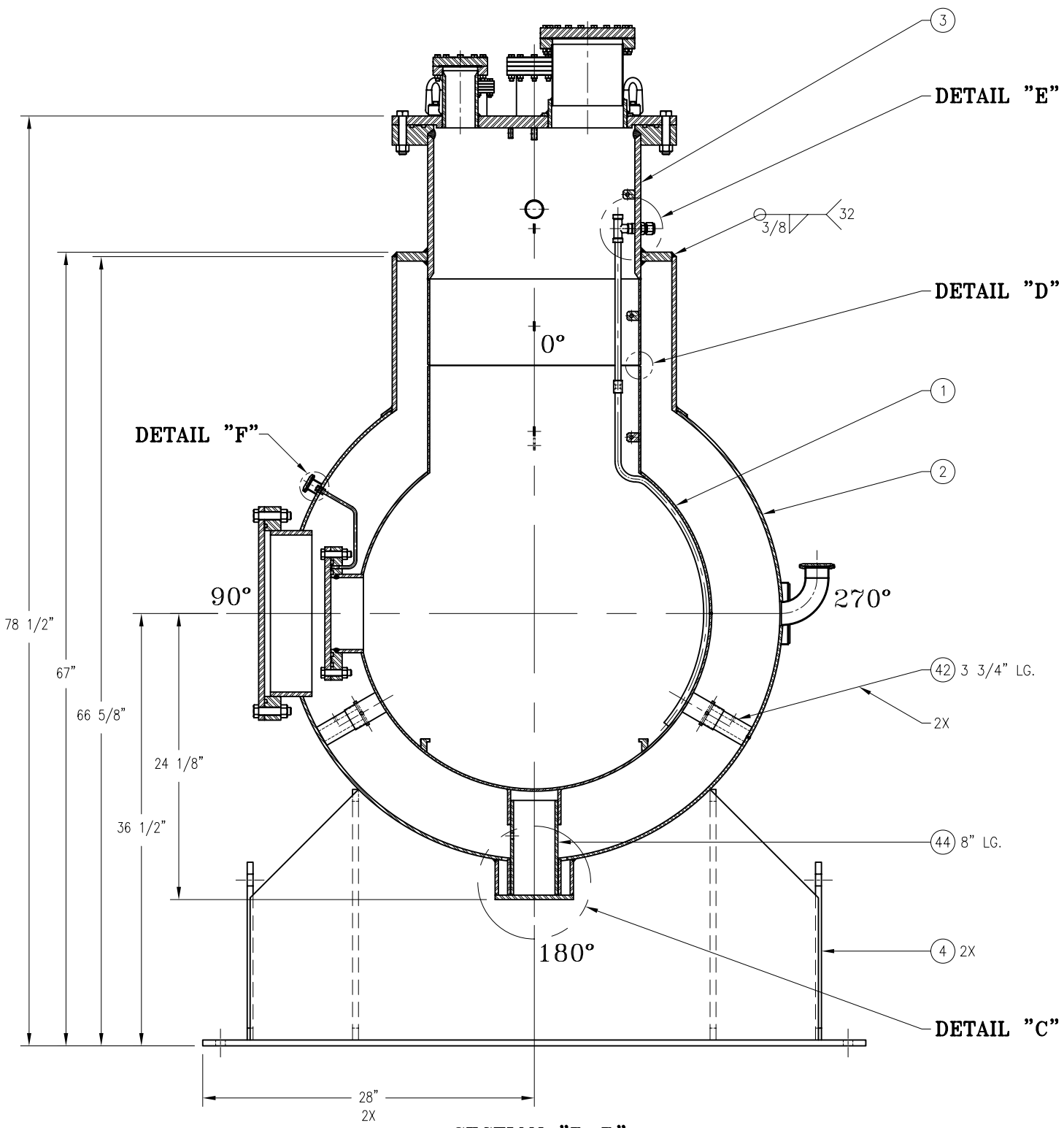

SECTION "B–B"
ITEM 5 NOT SHOWN FOR CLARITY
(FROM SHT. 2)

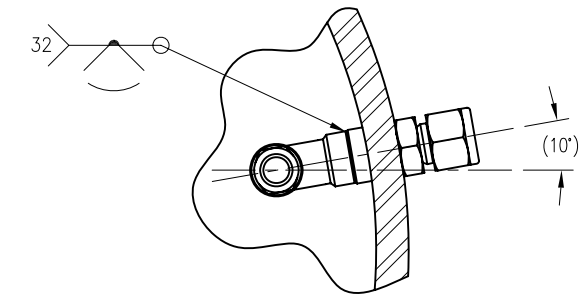

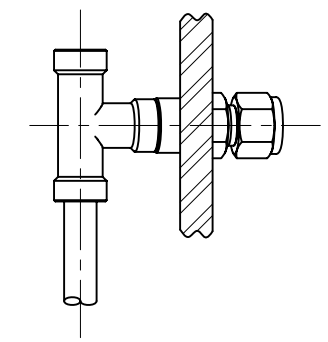

DETAIL "E"
SCALE: 4X

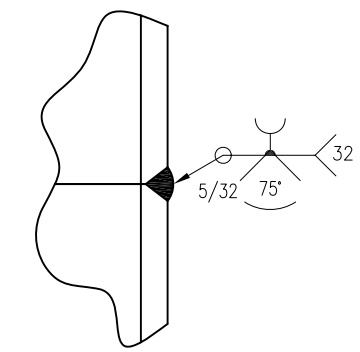

DETAIL "D"
SCALE: 10X

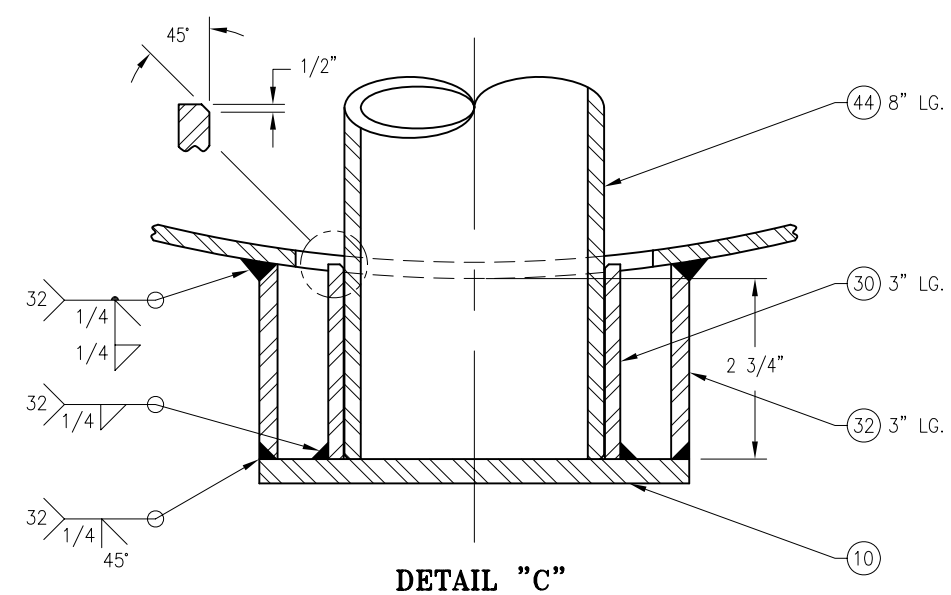

DETAIL "C"
SCALE: 4X

SEE 07-2032-BM-6500 FOR BILL OF MATERIALS.

REV.	DESCRIPTION	DATE	EDR	DWN.	CH'KD.	APP'D.	REV'D.	CHG.
REVISIONS								

–	07-2032	·	07-2032-6500	1	–	B
WEIGHT	COST CENTER	CONTRACT NO.	PART NUMBER	NO. REQ'D	NEXT ASSEMBLY	SIZE

DRAWN	CD	TOLERANCES	
CHECKED	SW	FRACTION	±1/16"
ENGINEER	SW	.XX	±.01
		.XXX	±.005
REVIEWED		ANGULAR	±5°
REL. DATE	12-10-07	3374	
		EDR	

DIMENSIONS ARE PROVIDED PRIOR TO SURFACE TREATMENTS UNLESS NOTED.

PHPK TECHNOLOGIES
2111 BUILDERS PLACE COLUMBUS, OHIO 43204

TITLE
YALE T962 CRYOSTAT
FINAL ASSY

SIZE	DRAWING NO.	CHG.
B	07-2032-6500	N/C

SCALE 1=12 SHEET 4 OF 5

INFORMATION SHOWN ON THIS DRAWING IS PROPRIETARY AND THE SOLE PROPERTY OF PHPK AND IS NOT TO BE DISCLOSED OR TRANSMITTED TO UNAUTHORIZED PARTIES.

v3.10.15 54/156

v3.10.15 55/156

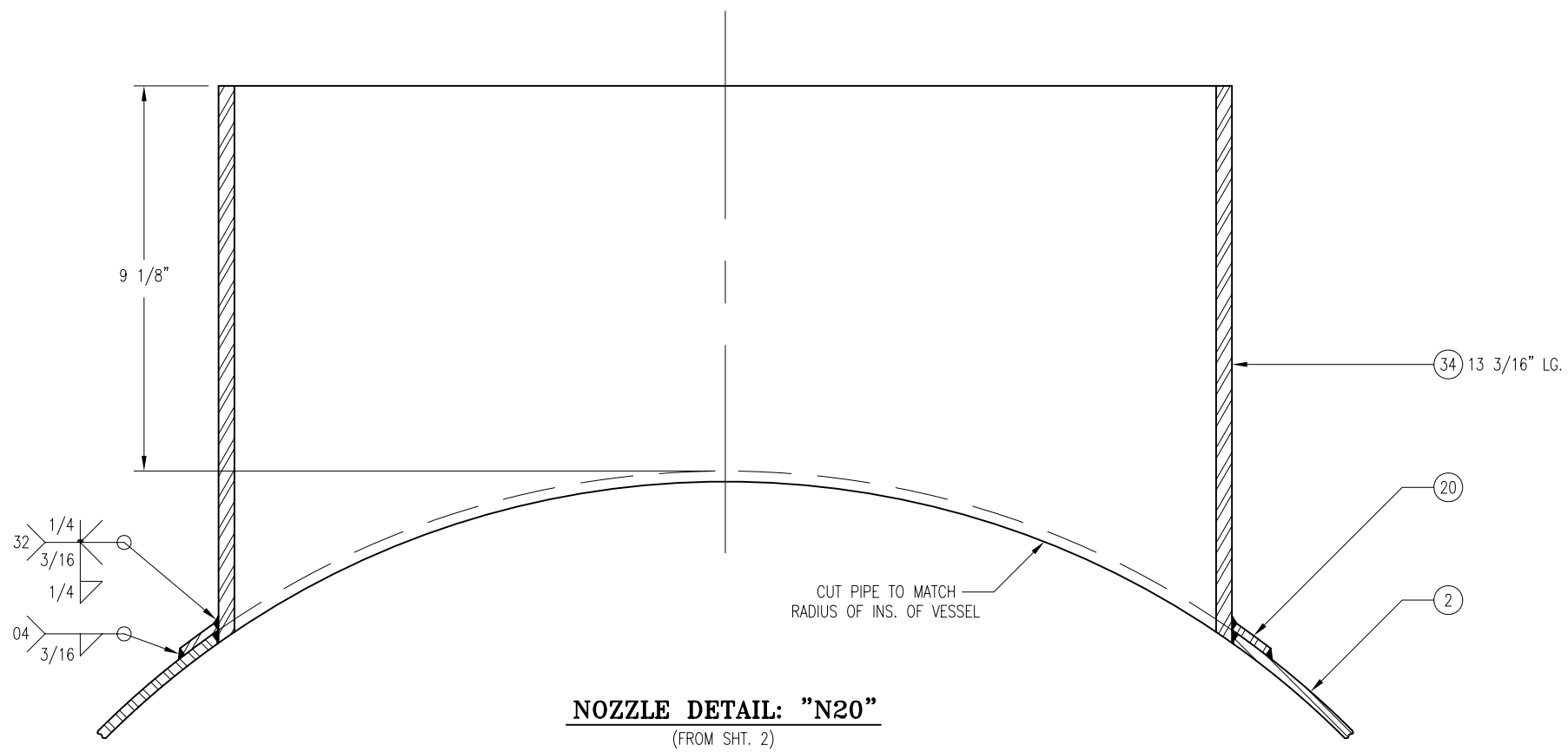

NOZZLE DETAIL: "N20"

(FROM SHT. 2)

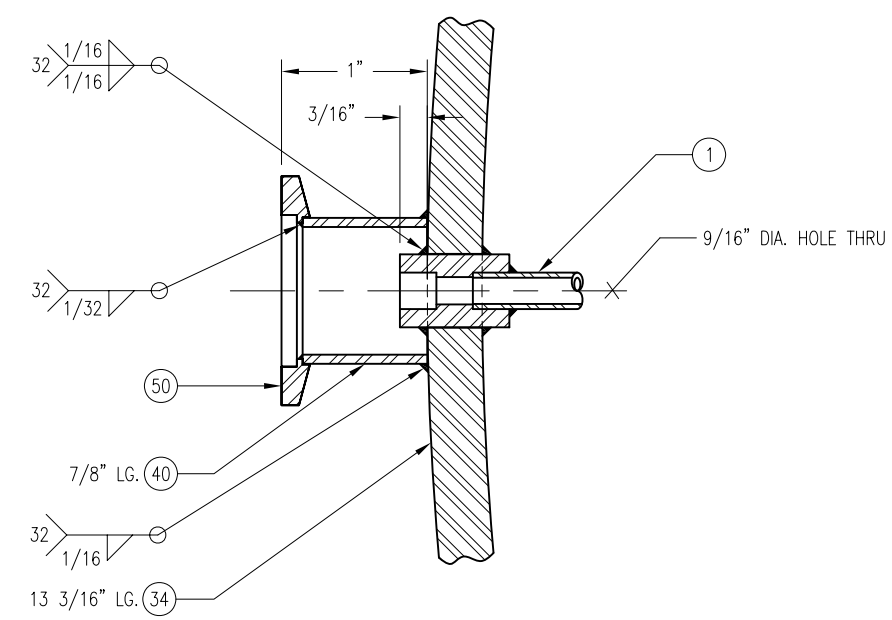

NOZZLE DETAIL: "N21"

ITEMS 52, 60 & 70 NOT SHOWN
(FROM SHT. 2)
SCALE: 3X

SEE 07-2032-BM-6500 FOR BILL OF MATERIALS.

REVISIONS							
CHG.	DATE	EDR	DWN.	CH'KD.	APP'D.	REV'D.	DESCRIPTION
.	.	.	.	.	.	.	.

INFORMATION SHOWN ON THIS DRAWING IS PROPRIETARY AND THE SOLE PROPERTY OF PHPK AND IS NOT TO BE DISCLOSED OR TRANSMITTED TO UNAUTHORIZED PARTIES.

WEIGHT	COST CENTER	CONTRACT NO.	PART NUMBER	NO. REQ'D	NEXT ASSEMBLY	SIZE
–	07-2032	·	07-2032-6500	1	–	B

DRAWN	CD	TOLERANCES	
CHECKED	SW	FRACTION	±1/16"
ENGINEER	SW	.XX	±.01
		.XXX	±.005
REVIEWED		ANGULAR	±5°
REL. DATE	12-10-07		3374
			EDR

DIMENSIONS ARE PROVIDED PRIOR TO SURFACE TREATMENTS UNLESS NOTED.

PHPK TECHNOLOGIES
2111 BUILDERS PLACE COLUMBUS, OHIO 43204

TITLE
YALE T962 CRYOSTAT
FINAL ASSY

SIZE	DRAWING NO.	CHG.
B	07-2032-6502	N/C

SCALE 1=4 SHEET 5 OF 5

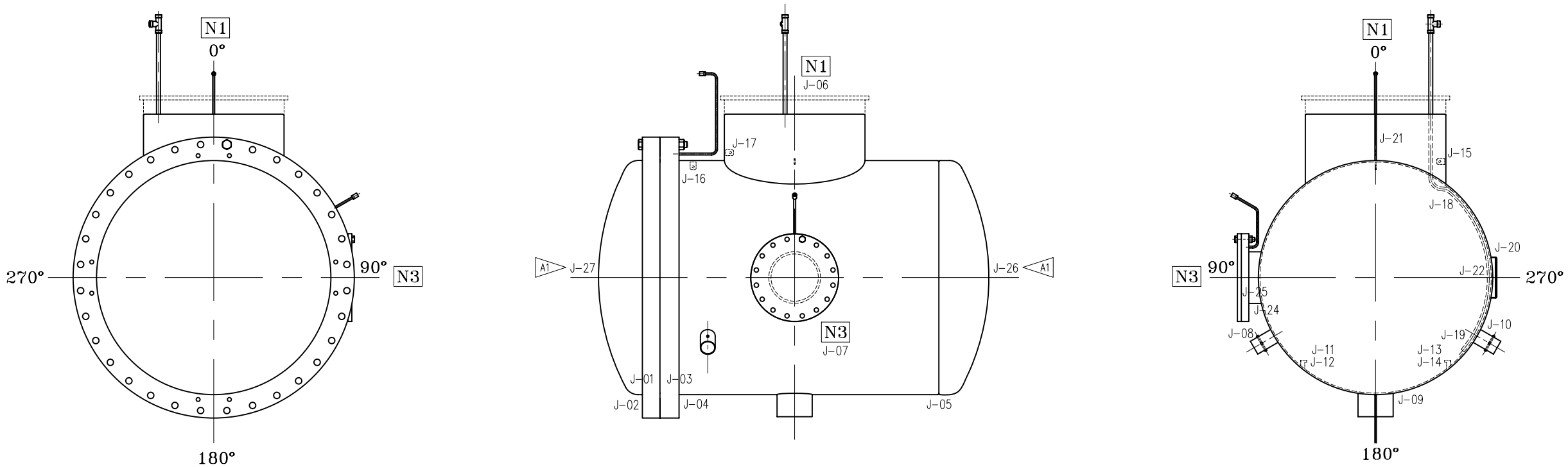

NOZZLE LOADS

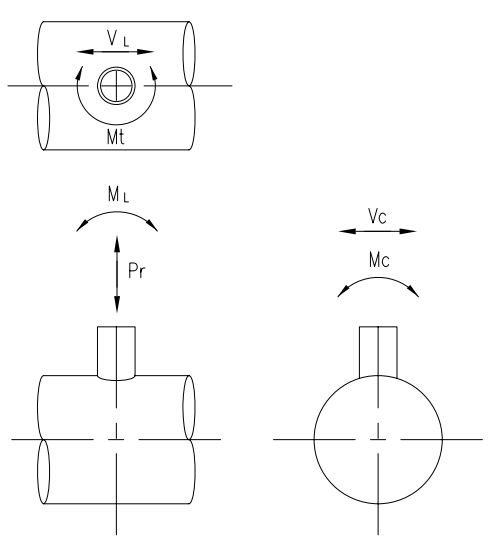

	N1	N3
V_L (Lbs)	–	–
Vc (Lbs)	–	–
Pr (Lbs)	2500	–
Mc (In–Lbs)	–	300
M_L (In–Lbs)	–	300
Mt (In–Lbs)	–	300

NOZZLE SCHEDULE

MARK	SIZE	FUNCTION
N1	18" OD X .165" WALL	CHIMNEY
N3	6" SCH 40	ACCESS PORT

WELD TAIL SYMBOL LEGEND

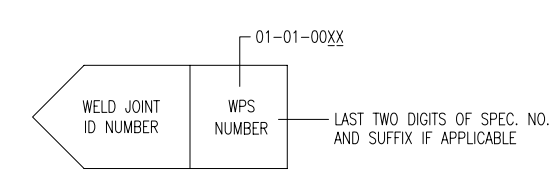

3) PENEUMATIC PRESSURE TEST PER PHPK STANDARD SPECIFICATION 01-QA-0017:
DESIGN PRESS: 45
TEST PRESS: 50

2) DYE PENETRANT CHECK ALL OPENINGS AND ATTACHMENTS PER PHPK STANDARD SPECIFICATION 01-QA-0007.

1) SEE 07-2032-BM-6501 FOR BILL OF MATERIALS.

GENERAL NOTES:

N/C	N/C	N/C	N/C	N/C	N/C	A	N/C	A	REV LETTER
9	8	7	6	5	4	3	2	1	SHEET NUMBER

INFORMATION SHOWN ON THIS DRAWING IS PROPRIETARY AND THE SOLE PROPERTY OF PHPK AND IS NOT TO BE DISCLOSED OR TRANSMITTED TO UNAUTHORIZED PARTIES.

–	07-2032	·	07-2032-6501	1	07-2032-6500	B
WEIGHT	COST CENTER	CONTRACT NO.	PART NUMBER	NO. REQ'D	NEXT ASSEMBLY	SIZE

DRAWN	CD	TOLERANCES	
CHECKED	SW	FRACTION	±1/16"
ENGINEER	SW	.XX	±.01
		.XXX	±.005
REVIEWED		ANGULAR	±5°
REL. DATE	11-7-07		3340
			EDR

DIMENSIONS ARE PROVIDED PRIOR TO SURFACE TREATMENTS UNLESS NOTED.

PHPK TECHNOLOGIES
2111 BUILDERS PLACE COLUMBUS, OHIO 43204

TITLE
YALE T962 CRYOSTAT
INNER VESSEL WELDMENT

SIZE B | DRAWING NO. 07-2032-6501 | CHG. A

SCALE 1=16 | SHEET 1 OF 9

CHG.	DATE	EDR	DWN.	CH'KD.	APP'D.	REV'D.	DESCRIPTION
A	12-3-07	3368	CD	SW	SW	·	1) ADDED WELD SYMBOLS J-26 & J-27.

REVISIONS

v3.10.15 56/156

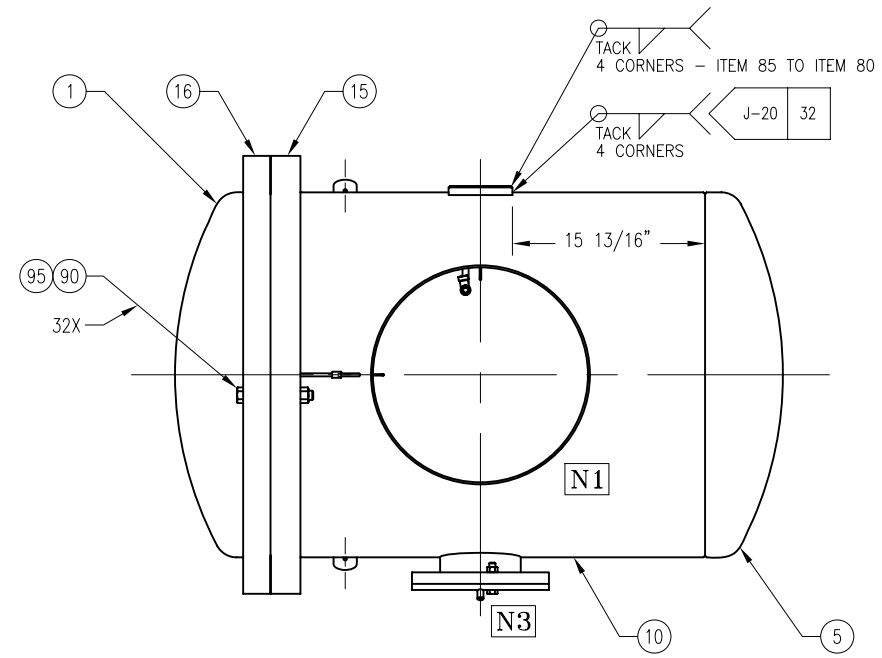

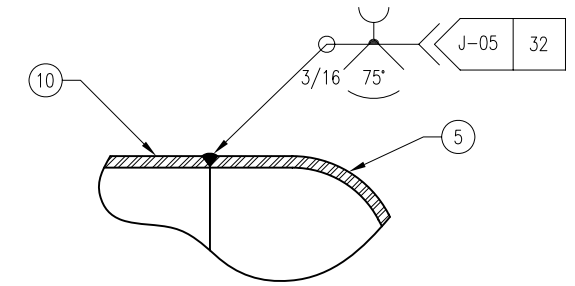

DETAIL "D"

SCALE: 5X

v3.10.15 57/156

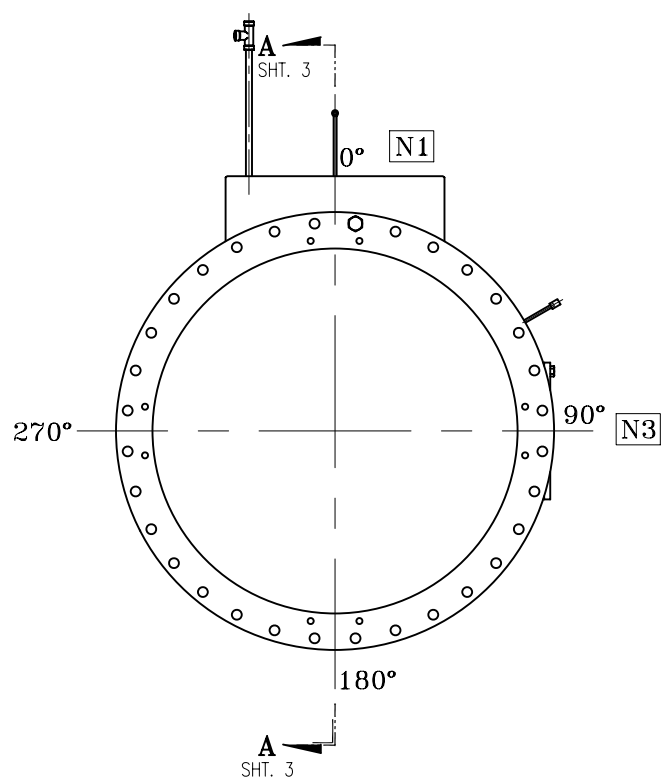

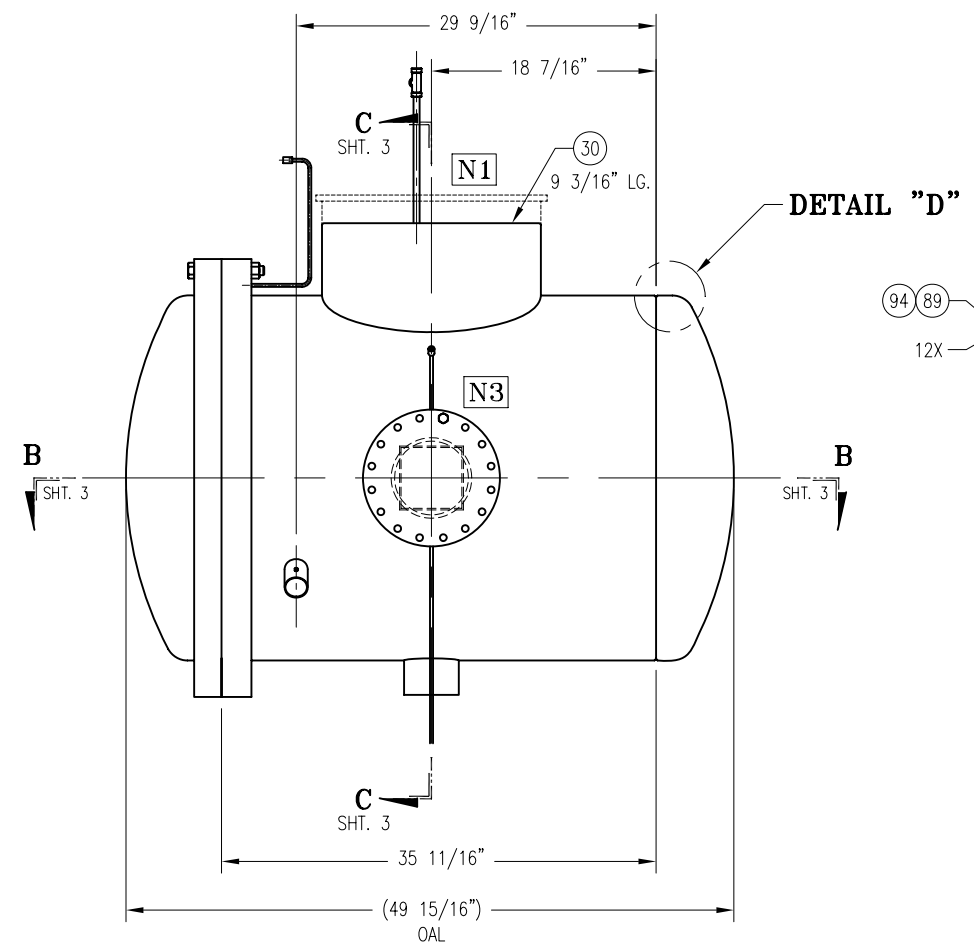

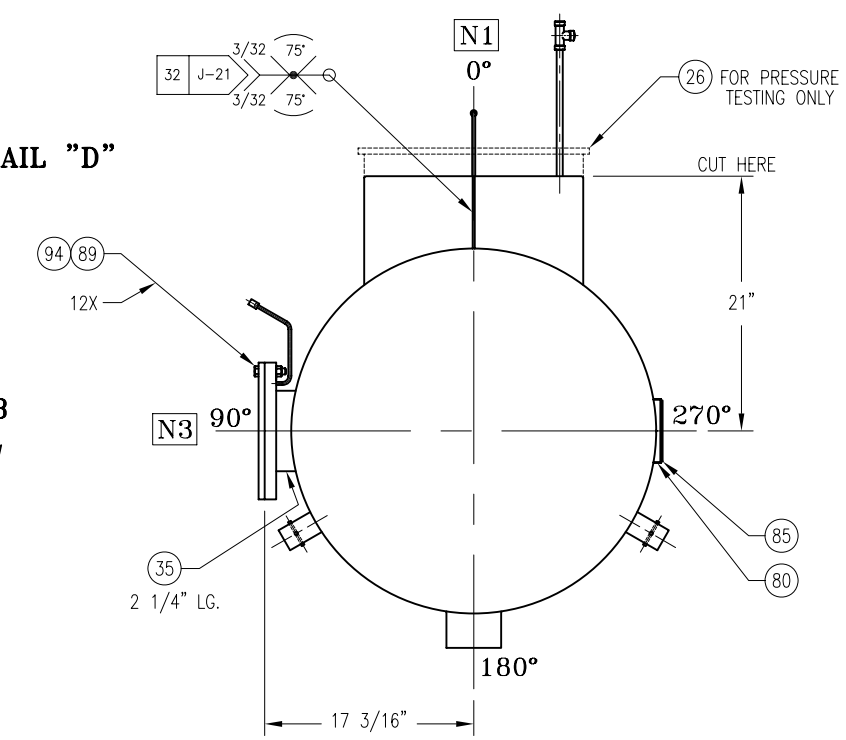

SEE 07-2032-BM-6501 FOR BILL OF MATERIALS.

CHG.	DATE	EDR	DWN.	CH'KD.	APP'D.	REV'D.	DESCRIPTION
.	.	.	.	.	.	.	.

REVISIONS

–	07-2032	·	07-2032-6501	1	07-2032-6500	B
WEIGHT	COST CENTER	CONTRACT NO.	PART NUMBER	NO. REQ'D	NEXT ASSEMBLY	SIZE

		TOLERANCES	
DRAWN	CD	FRACTION	±1/16"
CHECKED	SW	.XX	±.01
ENGINEER	SW	.XXX	±.005
REVIEWED		ANGULAR	±5°
REL. DATE	11-7-07	3340	
		EDR	

DIMENSIONS ARE PROVIDED PRIOR TO SURFACE TREATMENTS UNLESS NOTED.

PHPK TECHNOLOGIES
2111 BUILDERS PLACE COLUMBUS, OHIO 43204

TITLE
YALE T962 CRYOSTAT
INNER VESSEL WELDMENT

SIZE B | DRAWING NO. 07-2032-6501 | CHG. N/C

SCALE 1=16 | SHEET 2 OF 9

INFORMATION SHOWN ON THIS DRAWING IS PROPRIETARY AND THE SOLE PROPERTY OF PHPK AND IS NOT TO BE DISCLOSED OR TRANSMITTED TO UNAUTHORIZED PARTIES.

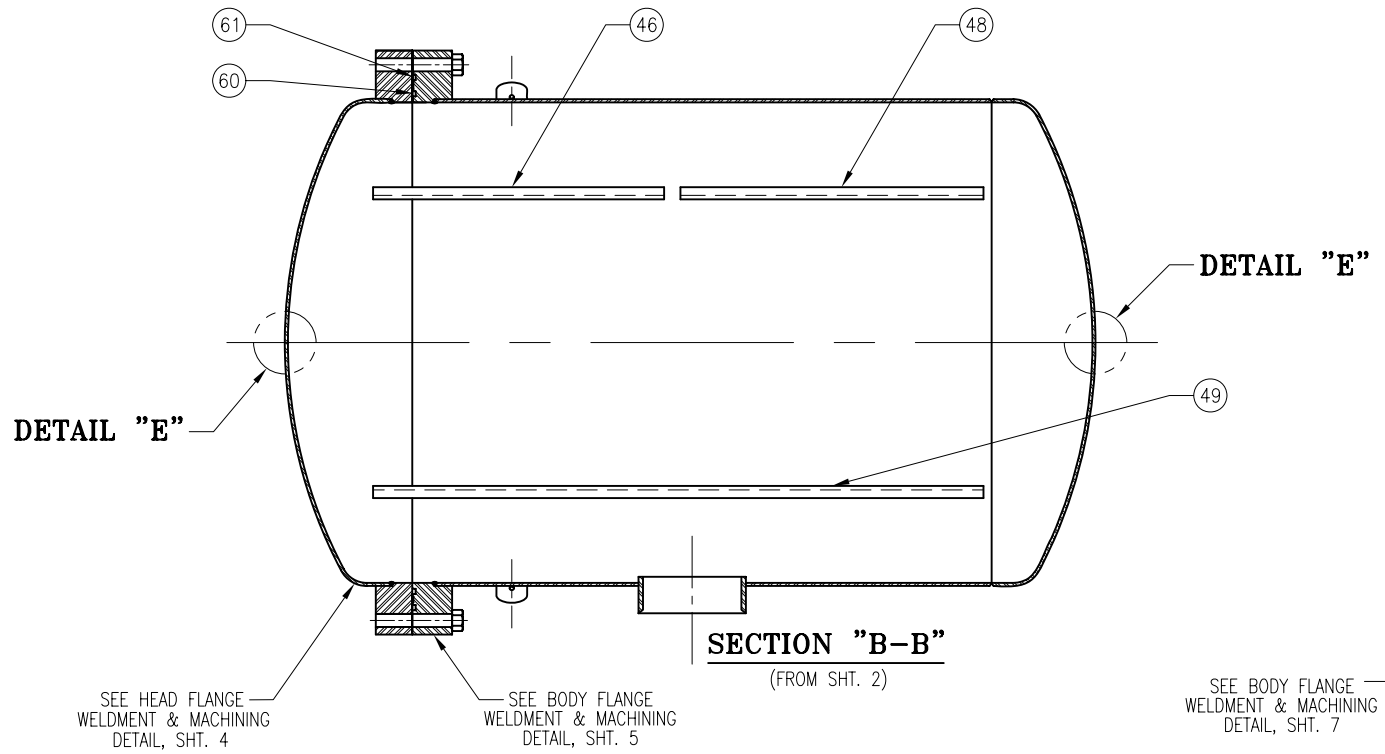

SECTION "B-B"
(FROM SHT. 2)

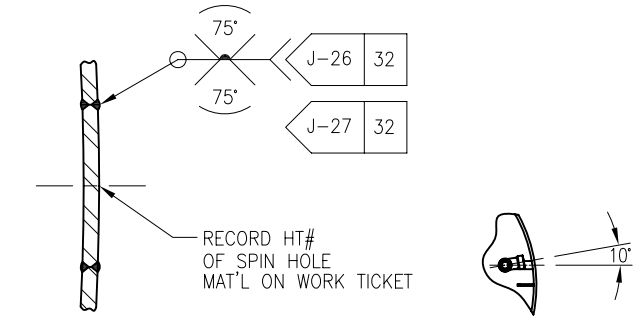

A1 DETAIL "E"
2 PLCS.
SCALE: 5X

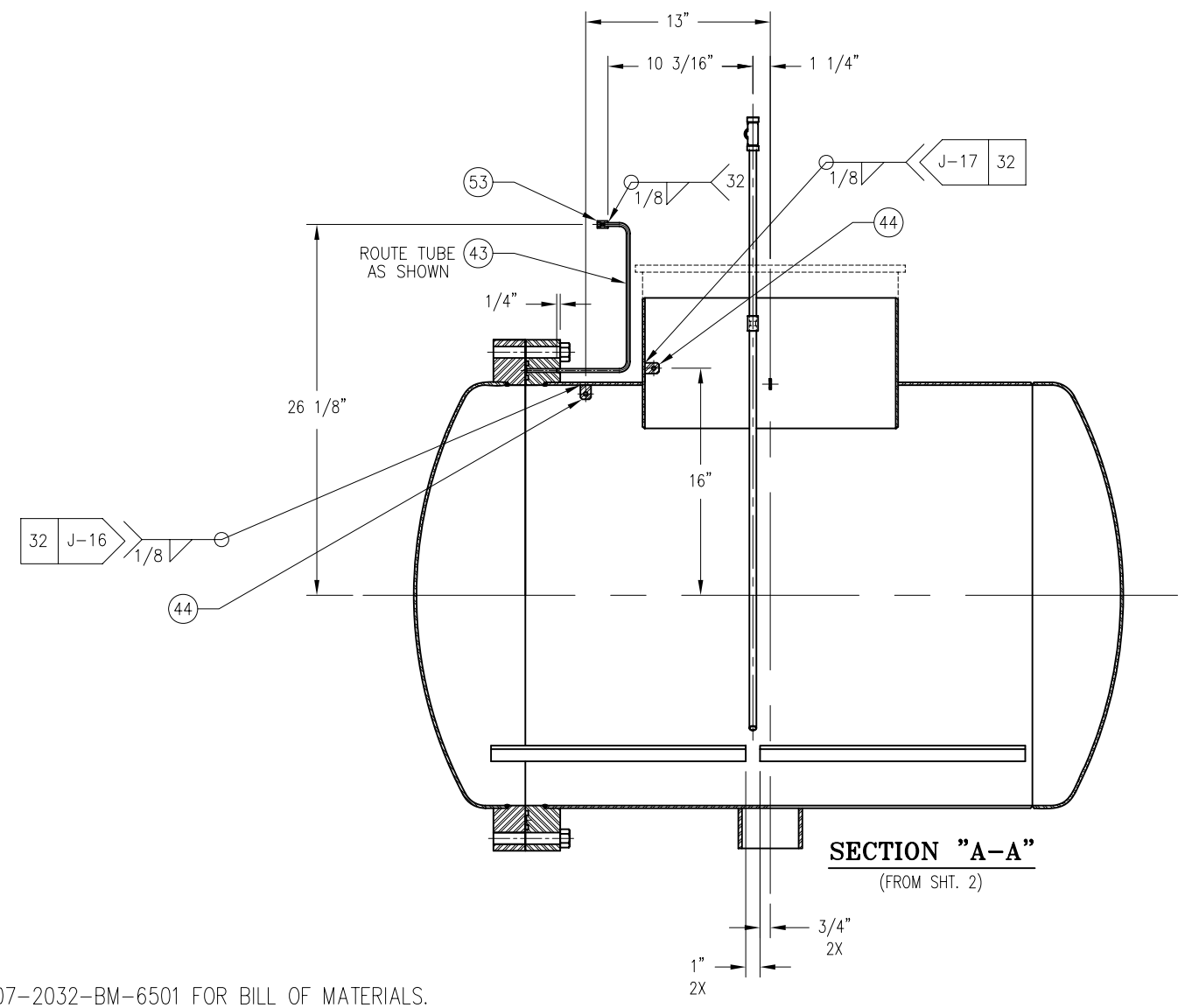

SECTION "A-A"
(FROM SHT. 2)

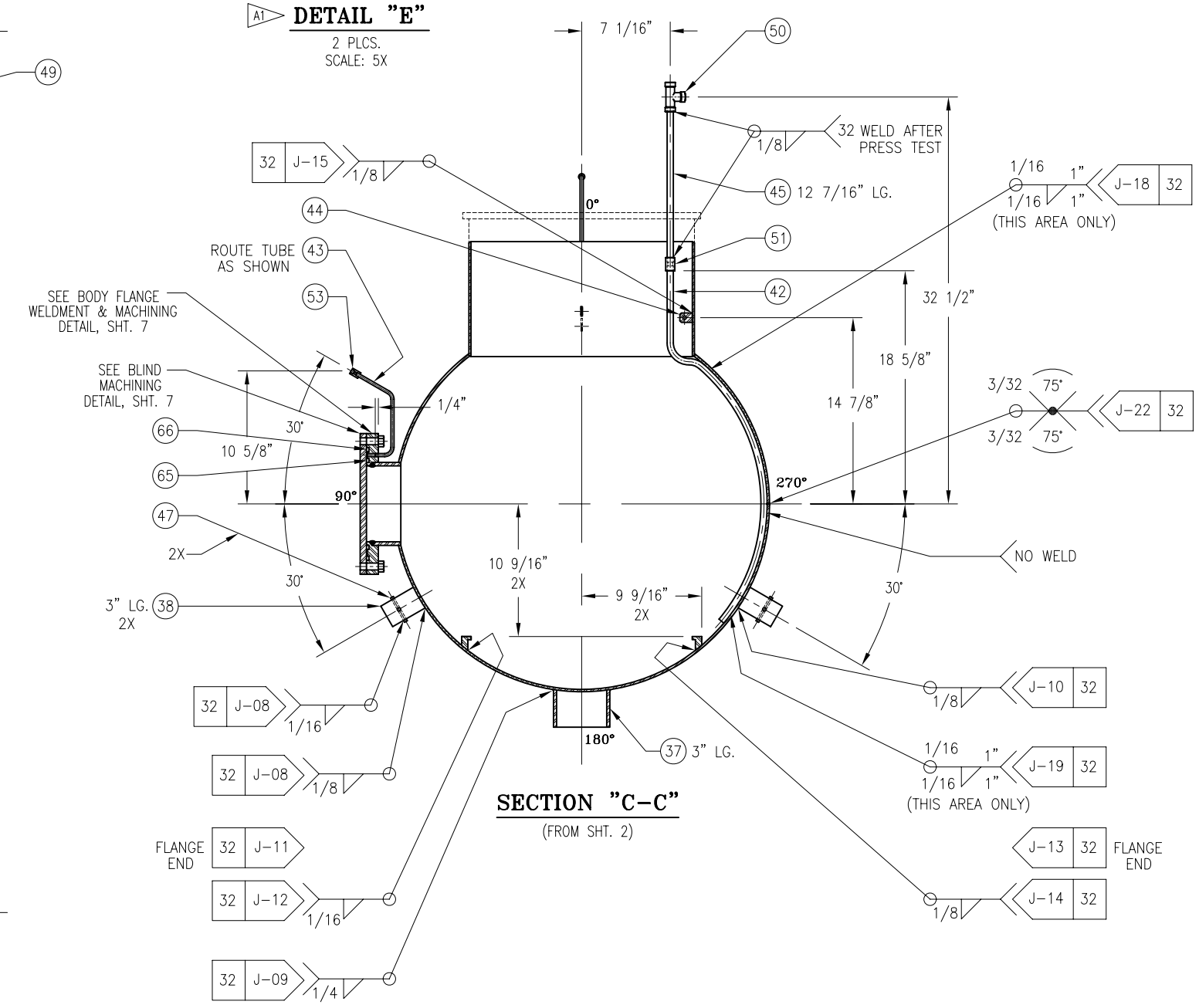

SECTION "C-C"
(FROM SHT. 2)

SEE 07-2032-BM-6501 FOR BILL OF MATERIALS.

CHG.	DATE	EDR	DWN.	CH'KD.	APP'D.	REV'D.	DESCRIPTION
A	12-3-07	3368	CD	SW	SW	·	1) ADDED DETAIL "E" 2 PLCS.

REVISIONS

–	07-2032	·	07-2032-6501	1	07-2032-6501	B
WEIGHT	COST CENTER	CONTRACT NO.	PART NUMBER	NO. REQ'D	NEXT ASSEMBLY	SIZE

DRAWN	CD	TOLERANCES	
CHECKED	SW	FRACTION	±1/16"
ENGINEER	SW	.XX	±.01
		.XXX	±.005
REVIEWED		ANGULAR	±5°
REL. DATE	11-7-07		3340
			EDR

DIMENSIONS ARE PROVIDED PRIOR TO SURFACE TREATMENTS UNLESS NOTED.

INFORMATION SHOWN ON THIS DRAWING IS PROPRIETARY AND THE SOLE PROPERTY OF PHPK AND IS NOT TO BE DISCLOSED OR TRANSMITTED TO UNAUTHORIZED PARTIES.

PHPK TECHNOLOGIES
2111 BUILDERS PLACE COLUMBUS, OHIO 43204

TITLE
YALE T962 CRYOSTAT
INNER VESSEL WELDMENT

SIZE	DRAWING NO.	CHG.
B	07-2032-6501	A

SCALE 1=12 SHEET 3 OF 9

v3.10.15 58/156

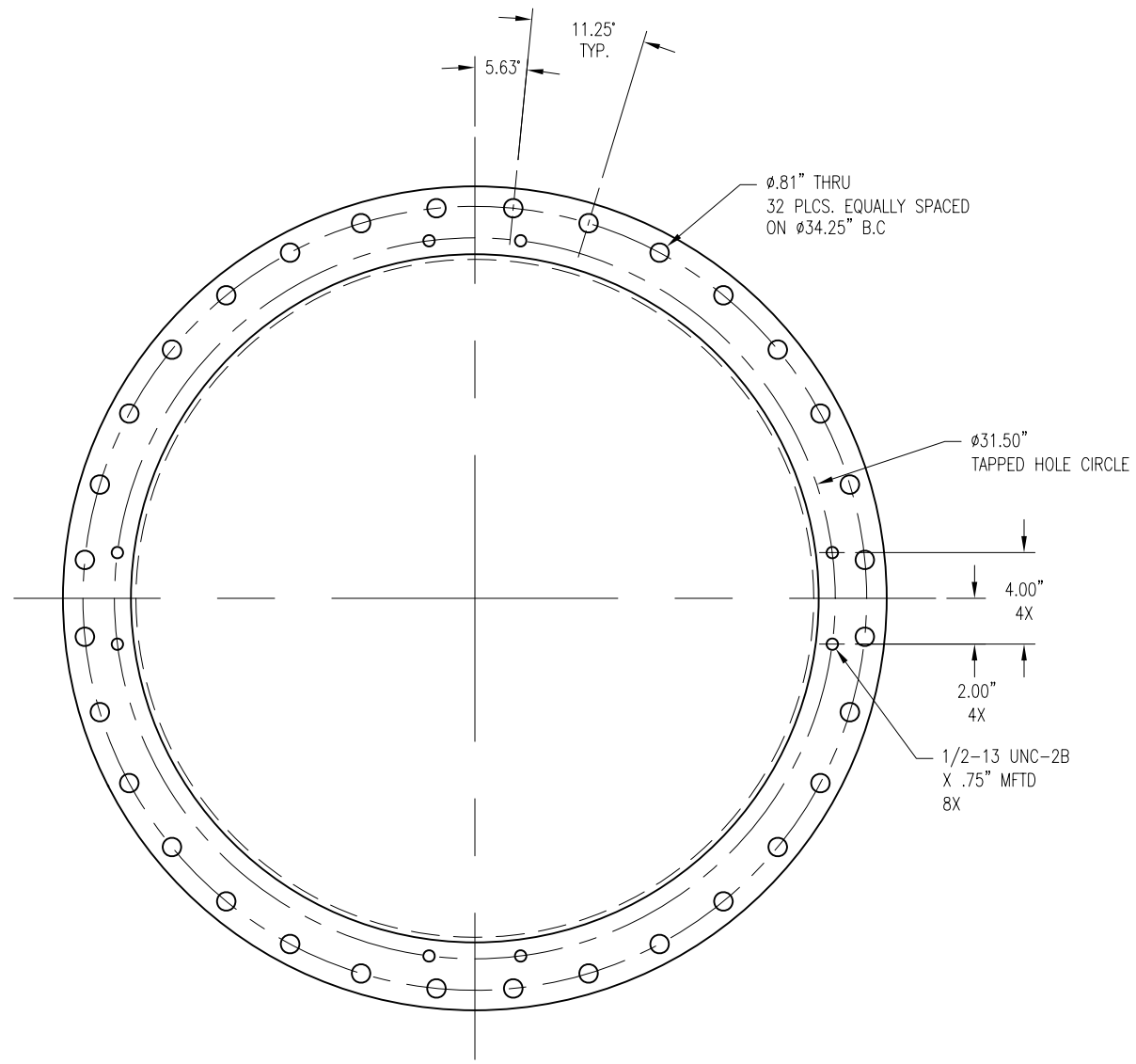

FLANGE WELDMENT (HEAD)
& MACHINING DETAIL
(FROM SHT. 3)

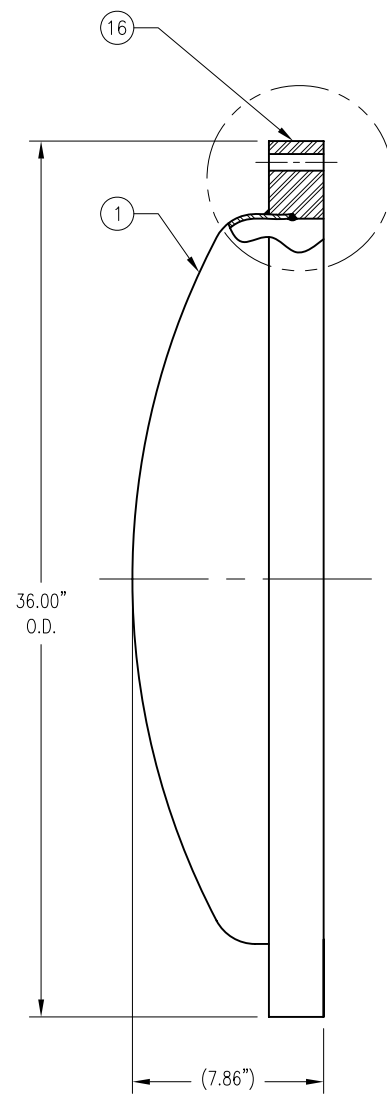

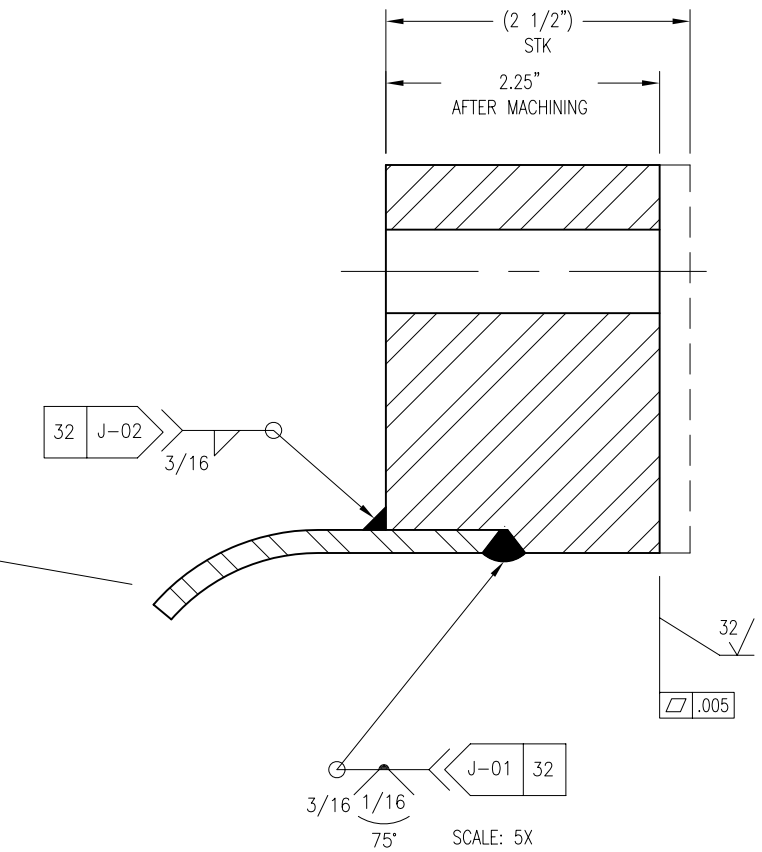

v3.10.15 59/156

REVISIONS

CHG.	DATE	EDR	DWN.	CH'KD.	APP'D.	REV'D.	DESCRIPTION
.	.	.	.	.	.	.	.

SEE 07-2032-BM-6501 FOR BILL OF MATERIALS.

–	07-2032	·	07-2032-6501	1	07-2032-6501	B
WEIGHT	COST CENTER	CONTRACT NO.	PART NUMBER	NO. REQ'D	NEXT ASSEMBLY	SIZE

DRAWN	CD	TOLERANCES	
CHECKED	SW	FRACTION	±1/16"
ENGINEER	SW	.XX	±.01
		.XXX	±.005
REVIEWED		ANGULAR	±5°
REL. DATE	11-7-07	3340	
		EDR	

DIMENSIONS ARE PROVIDED PRIOR TO SURFACE TREATMENTS UNLESS NOTED.

INFORMATION SHOWN ON THIS DRAWING IS PROPRIETARY AND THE SOLE PROPERTY OF PHPK AND IS NOT TO BE DISCLOSED OR TRANSMITTED TO UNAUTHORIZED PARTIES.

PHPK TECHNOLOGIES
2111 BUILDERS PLACE COLUMBUS, OHIO 43204

TITLE
YALE T962 CRYOSTAT
INNER VESSEL WELDMENT

SIZE	DRAWING NO.	CHG.
B	07-2032-6501	N/C

SCALE 1=8 SHEET 4 OF 9

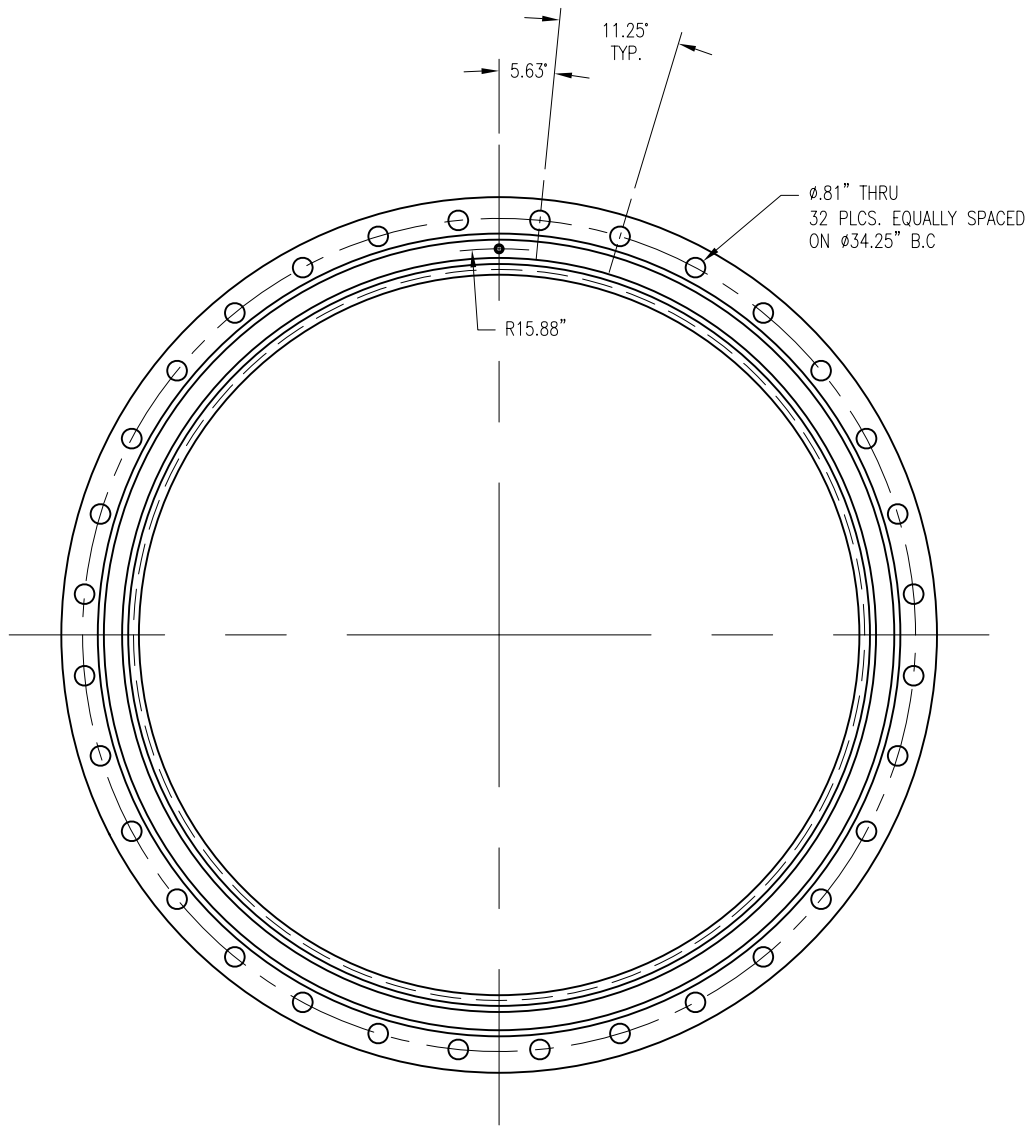

FLANGE WELDMENT (BODY)
& MACHINING DETAIL
(FROM SHT. 3)

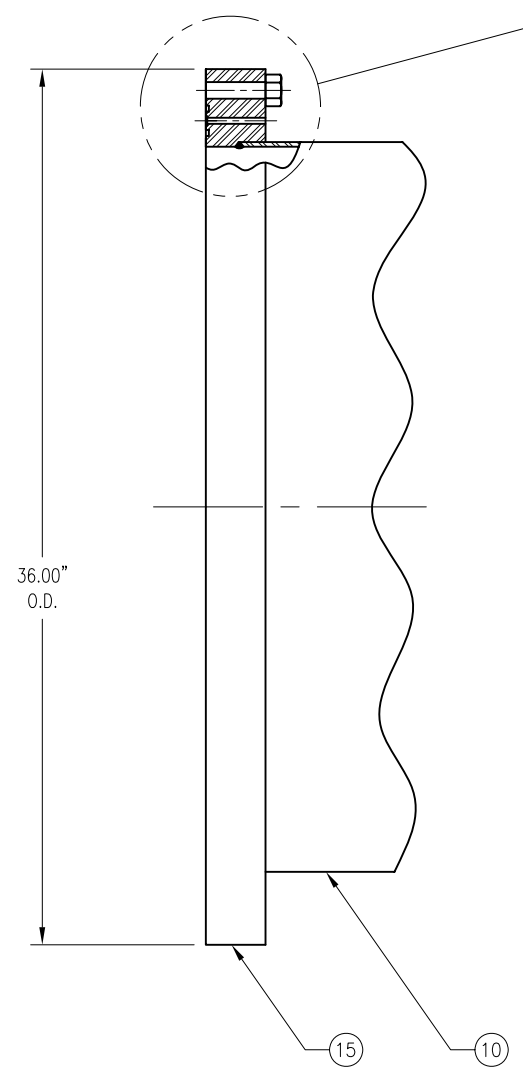

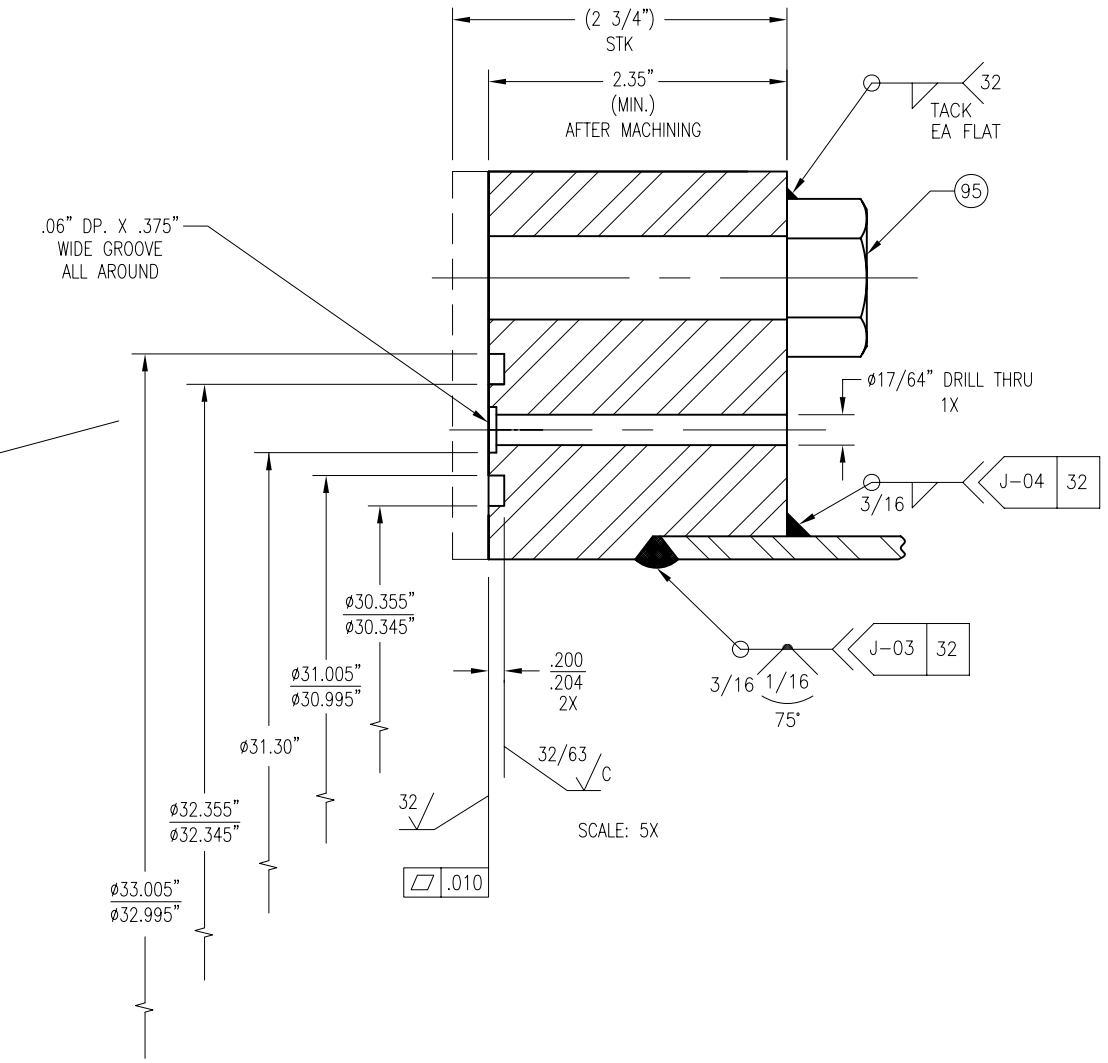

v3.10.15 60/156

SEE 07-2032-BM-6501 FOR BILL OF MATERIALS.

REVISIONS							
CHG.	DATE	EDR	DWN.	CH'KD.	APP'D.	REV'D.	DESCRIPTION
.	.	.	.	.	.	.	.

INFORMATION SHOWN ON THIS DRAWING IS PROPRIETARY AND THE SOLE PROPERTY OF PHPK AND IS NOT TO BE DISCLOSED OR TRANSMITTED TO UNAUTHORIZED PARTIES.

–	07-2032	·	07-2032-6501	1	07-2032-6501	B
WEIGHT	COST CENTER	CONTRACT NO.	PART NUMBER	NO. REQ'D	NEXT ASSEMBLY	SIZE

DRAWN	CD	TOLERANCES	
CHECKED	SW	FRACTION	±1/16"
ENGINEER	SW	.XX	±.01
		.XXX	±.005
REVIEWED		ANGULAR	±5°
REL. DATE	11-7-07		3340
			EDR

DIMENSIONS ARE PROVIDED PRIOR TO SURFACE TREATMENTS UNLESS NOTED.

PHPK TECHNOLOGIES
2111 BUILDERS PLACE COLUMBUS, OHIO 43204

TITLE
YALE T962 CRYOSTAT
INNER VESSEL WELDMENT

SIZE	DRAWING NO.	CHG.
B	07-2032-6501	N/C

SCALE 1=8 SHEET 5 OF 9

v3.10.15 61/156

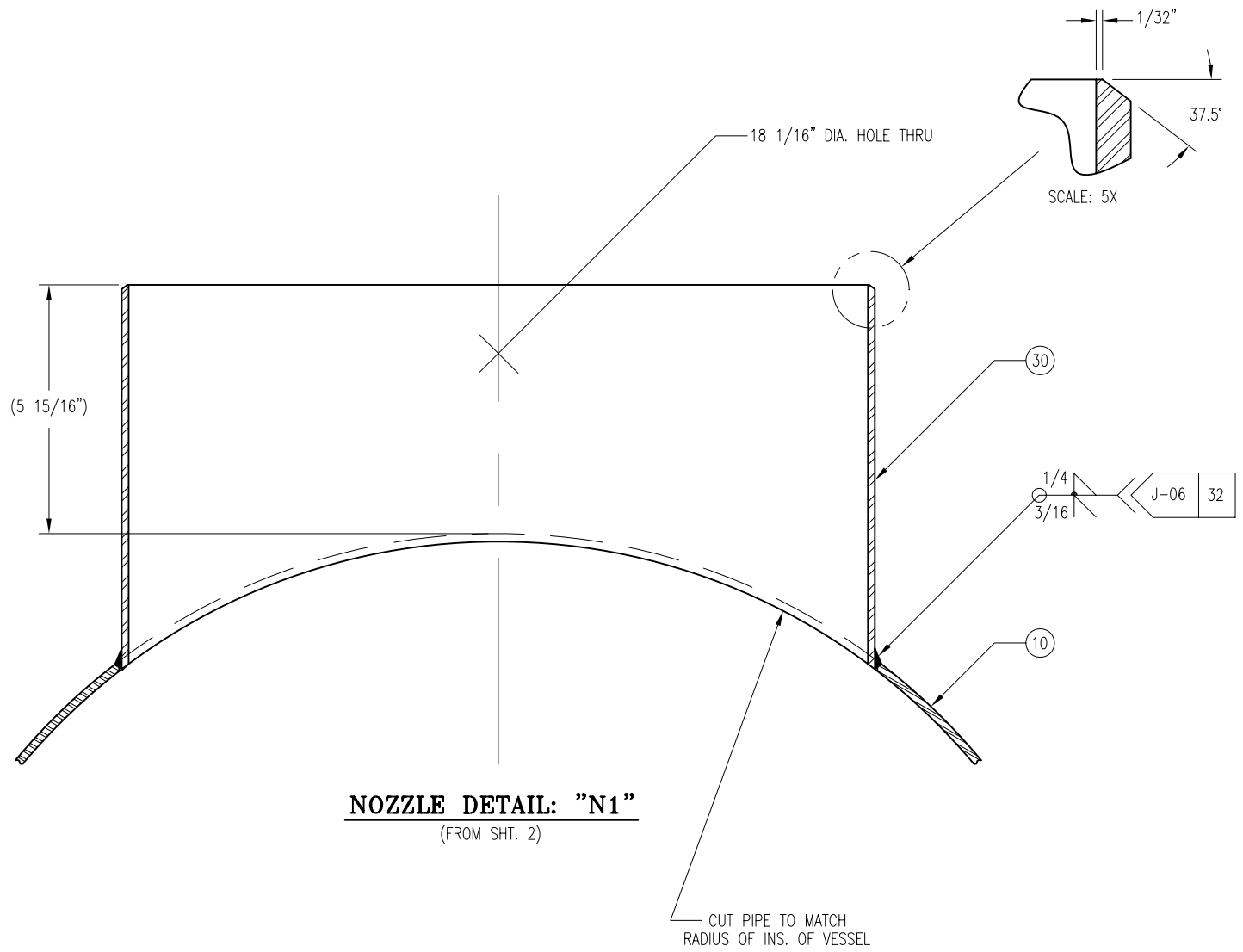

NOZZLE DETAIL: "N1"

(FROM SHT. 2)

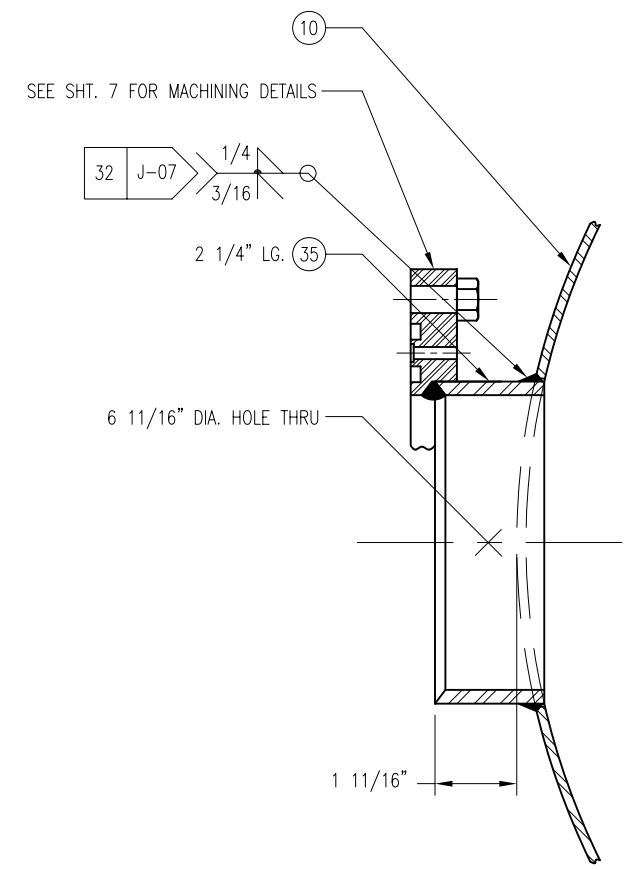

NOZZLE DETAIL: "N3"

(FROM SHT. 2)

ITEMS 20 & 25 NOT SHOWN FOR CLARITY

SEE 07-2032-BM-6501 FOR BILL OF MATERIALS.

REVISIONS

CHG.	DATE	EDR	DWN.	CH'KD.	APP'D.	REV'D.	DESCRIPTION
.	.	.	.	.	.	.	.

–	07-2032	·	07-2032-6501	1	07-2032-6501	B
WEIGHT	COST CENTER	CONTRACT NO.	PART NUMBER	NO. REQ'D	NEXT ASSEMBLY	SIZE

DRAWN	CD	TOLERANCES	
CHECKED	SW	FRACTION	±1/16"
ENGINEER	SW	.XX	±.01
		.XXX	±.005
REVIEWED		ANGULAR	±5°
REL. DATE	11-7-07		3340
			EDR

DIMENSIONS ARE PROVIDED PRIOR TO SURFACE TREATMENTS UNLESS NOTED.

INFORMATION SHOWN ON THIS DRAWING IS PROPRIETARY AND THE SOLE PROPERTY OF PHPK AND IS NOT TO BE DISCLOSED OR TRANSMITTED TO UNAUTHORIZED PARTIES.

PHPK TECHNOLOGIES
2111 BUILDERS PLACE COLUMBUS, OHIO 43204

TITLE
YALE T962 CRYOSTAT
INNER VESSEL WELDMENT

SIZE	DRAWING NO.	CHG.
B	07-2032-6501	N/C

SCALE 1=4 SHEET 6 OF 9

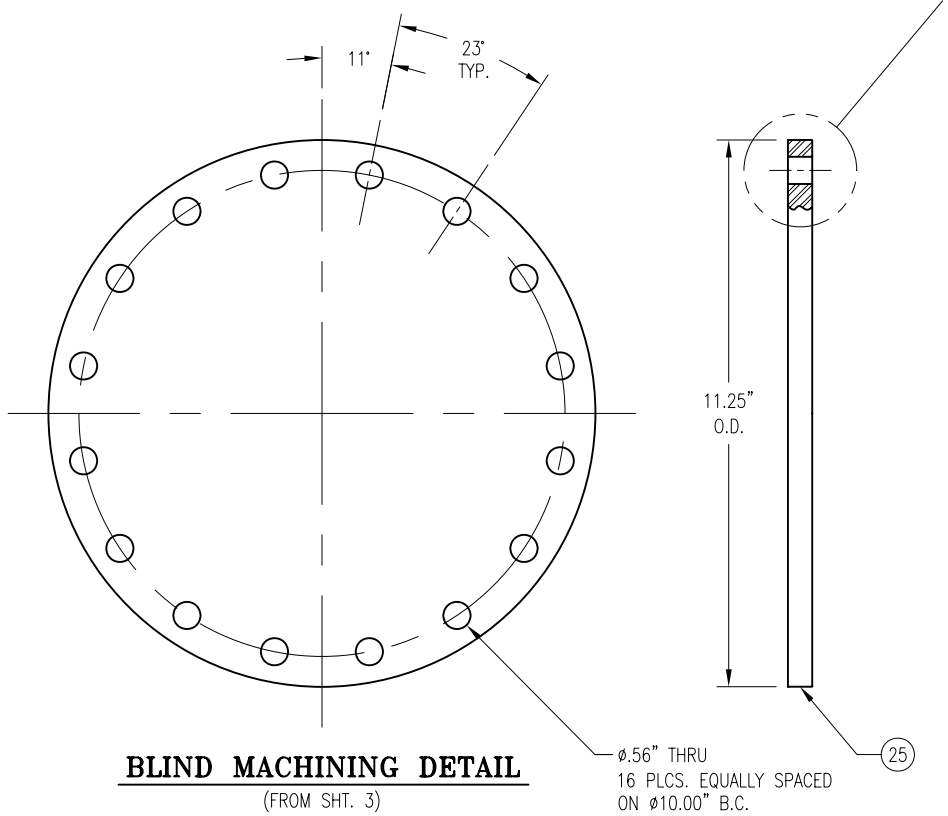

BLIND MACHINING DETAIL

(FROM SHT. 3)

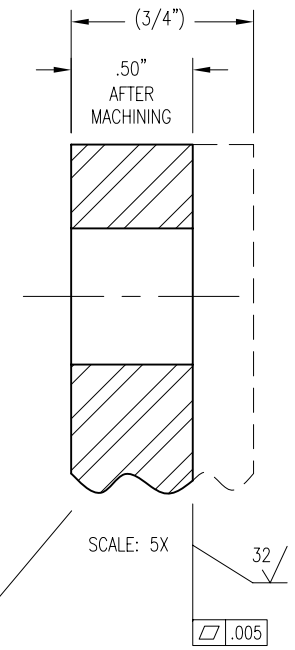

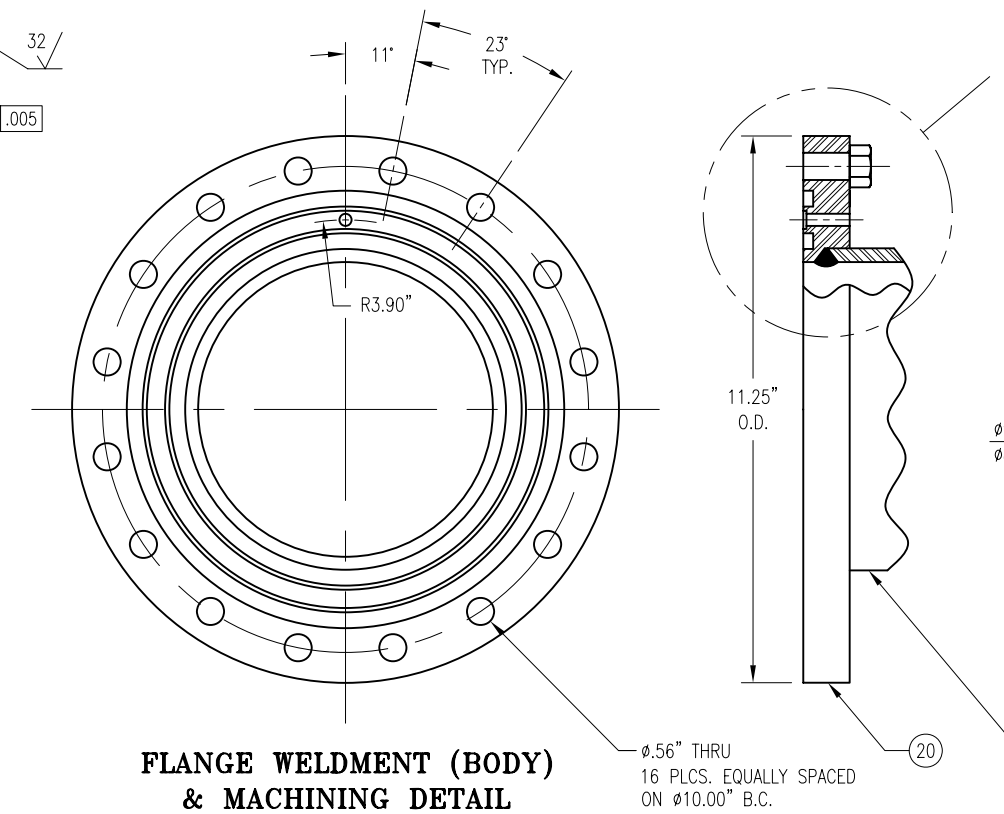

FLANGE WELDMENT (BODY) & MACHINING DETAIL

(FROM SHT. 3)

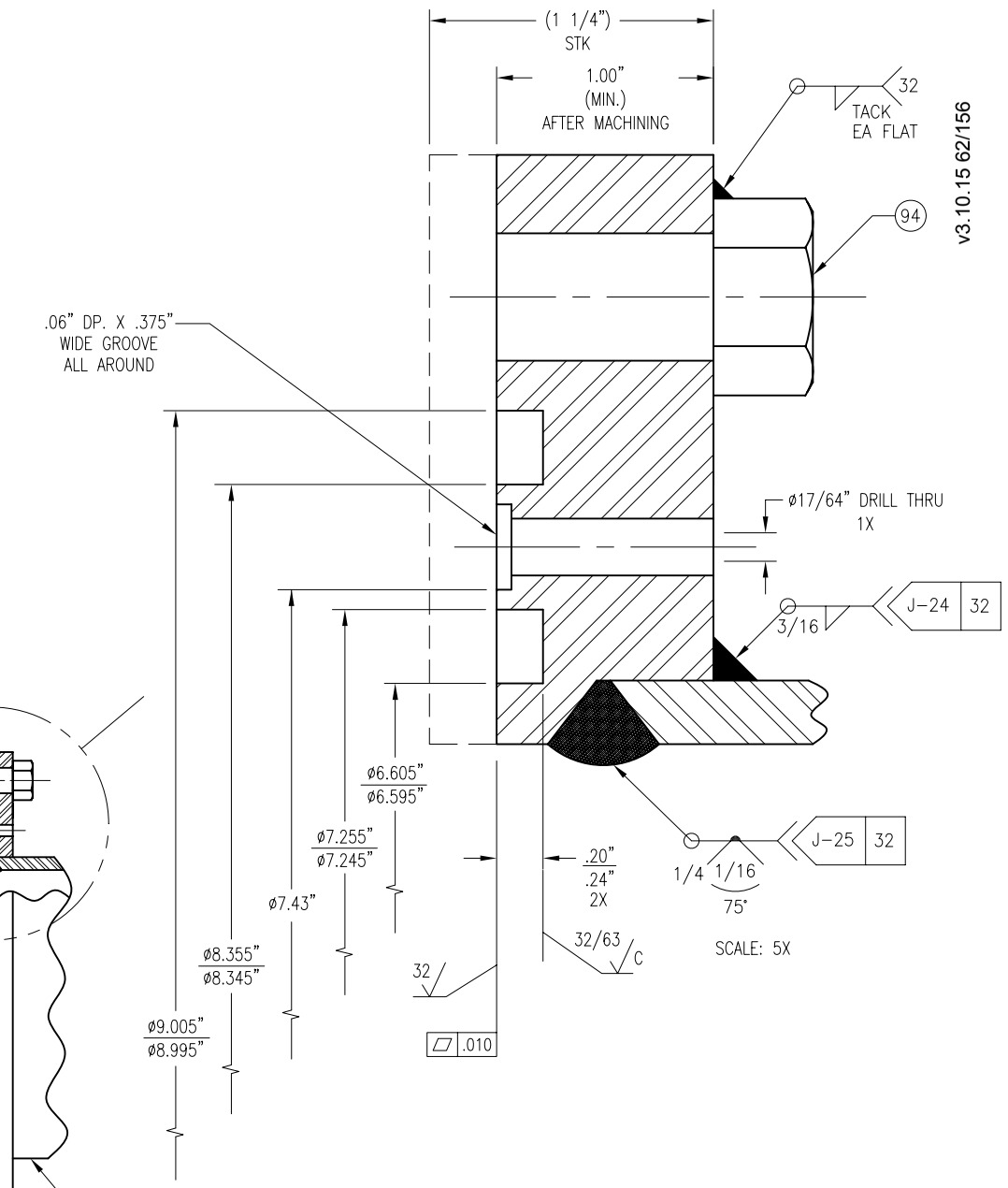

SEE 07-2032-BM-6501 FOR BILL OF MATERIALS.

INFORMATION SHOWN ON THIS DRAWING IS PROPRIETARY AND THE SOLE PROPERTY OF PHPK AND IS NOT TO BE DISCLOSED OR TRANSMITTED TO UNAUTHORIZED PARTIES.

–	07-2032	·	07-2032-6501	1	07-2032-6501	B
WEIGHT	COST CENTER	CONTRACT NO.	PART NUMBER	NO. REQ'D	NEXT ASSEMBLY	SIZE

DRAWN	CD	TOLERANCES	
CHECKED	SW	FRACTION	±1/16"
ENGINEER	SW	.XX	±.01
		.XXX	±.005
REVIEWED		ANGULAR	±5°
REL. DATE	11-7-07	3340	
		EDR	

DIMENSIONS ARE PROVIDED PRIOR TO SURFACE TREATMENTS UNLESS NOTED.

PHPK TECHNOLOGIES
2111 BUILDERS PLACE COLUMBUS, OHIO 43204

TITLE: YALE T962 CRYOSTAT INNER VESSEL WELDMENT

SIZE	DRAWING NO.	CHG.
B	07-2032-6501	N/C

SCALE 1=4 SHEET 7 OF 9

v3.10.15 62/156

REVISIONS

CHG.	DATE	EDR	DWN.	CH'KD.	APP'D.	REV'D.	DESCRIPTION
.	.	.	.	.	.	.	.

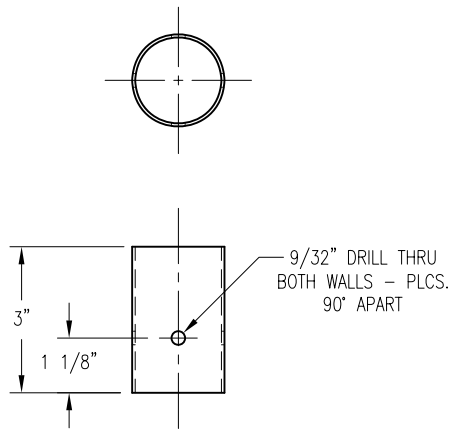

DETAIL, ITEM 38
2 REQ'D.
SCALE 2X

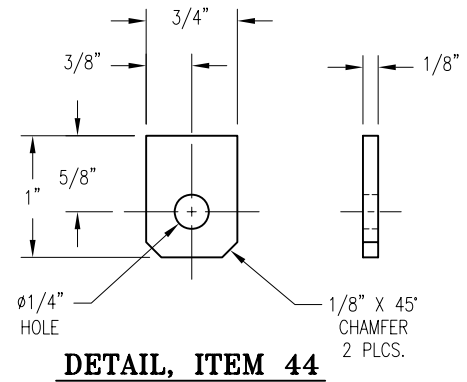

DETAIL, ITEM 44
3 REQ'D.
SCALE 5X

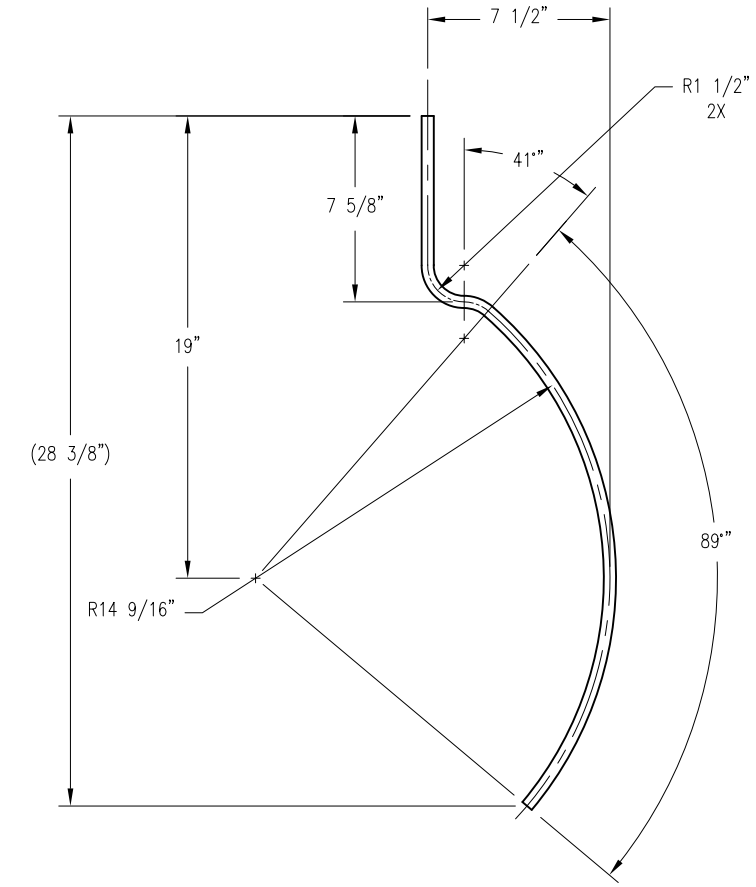

DETAIL, ITEM 42
1 REQ'D.

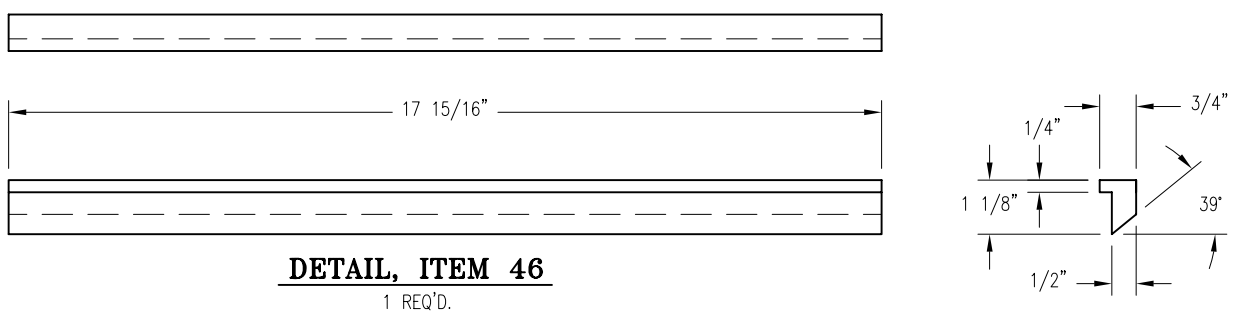

DETAIL, ITEM 46
1 REQ'D.
SCALE 2X

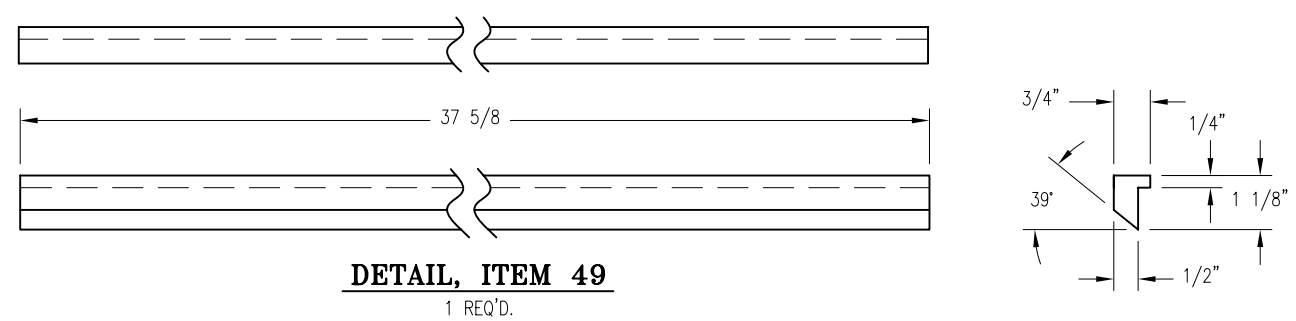

DETAIL, ITEM 49
1 REQ'D.
SCALE 2X

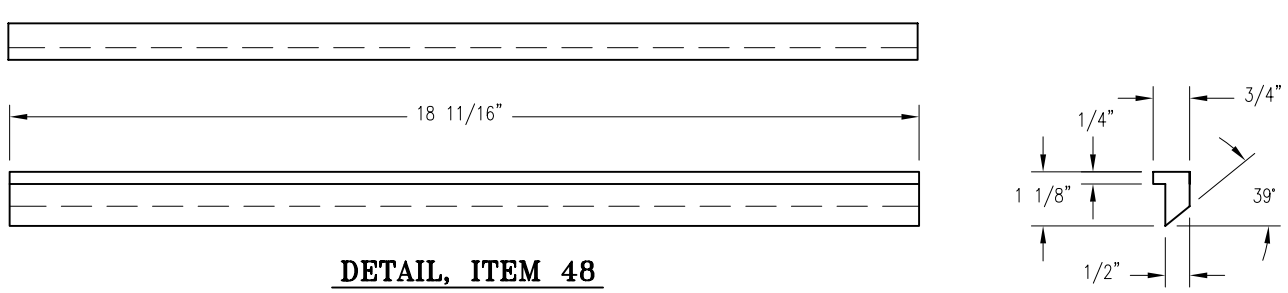

DETAIL, ITEM 48
1 REQ'D.
SCALE 2X

SEE 07-2032-BM-6501 FOR BILL OF MATERIALS.

REVISIONS

CHG.	DATE	EDR	DWN.	CH'KD.	APP'D.	REV'D.	DESCRIPTION
.	.	.	.	.	.	.	.

v3.10.15 63/156

–	07-2032	·	07-2032-6501	1	07-2032-6500	B
WEIGHT	COST CENTER	CONTRACT NO.	PART NUMBER	NO. REQ'D	NEXT ASSEMBLY	SIZE

DRAWN	CD	TOLERANCES	
CHECKED	SW	FRACTION	±1/16"
ENGINEER	SW	.XX	±.01
		.XXX	±.005
REVIEWED		ANGULAR	±5°
REL. DATE	11-7-07		3340
			EDR

DIMENSIONS ARE PROVIDED PRIOR TO SURFACE TREATMENTS UNLESS NOTED.

INFORMATION SHOWN ON THIS DRAWING IS PROPRIETARY AND THE SOLE PROPERTY OF PHPK AND IS NOT TO BE DISCLOSED OR TRANSMITTED TO UNAUTHORIZED PARTIES.

PHPK TECHNOLOGIES
2111 BUILDERS PLACE COLUMBUS, OHIO 43204

TITLE
YALE T962 CRYOSTAT
INNER VESSEL WELDMENT

SIZE	DRAWING NO.	CHG.
B	07-2032-6501	N/C

SCALE 1=8

v3.10.15 64/156

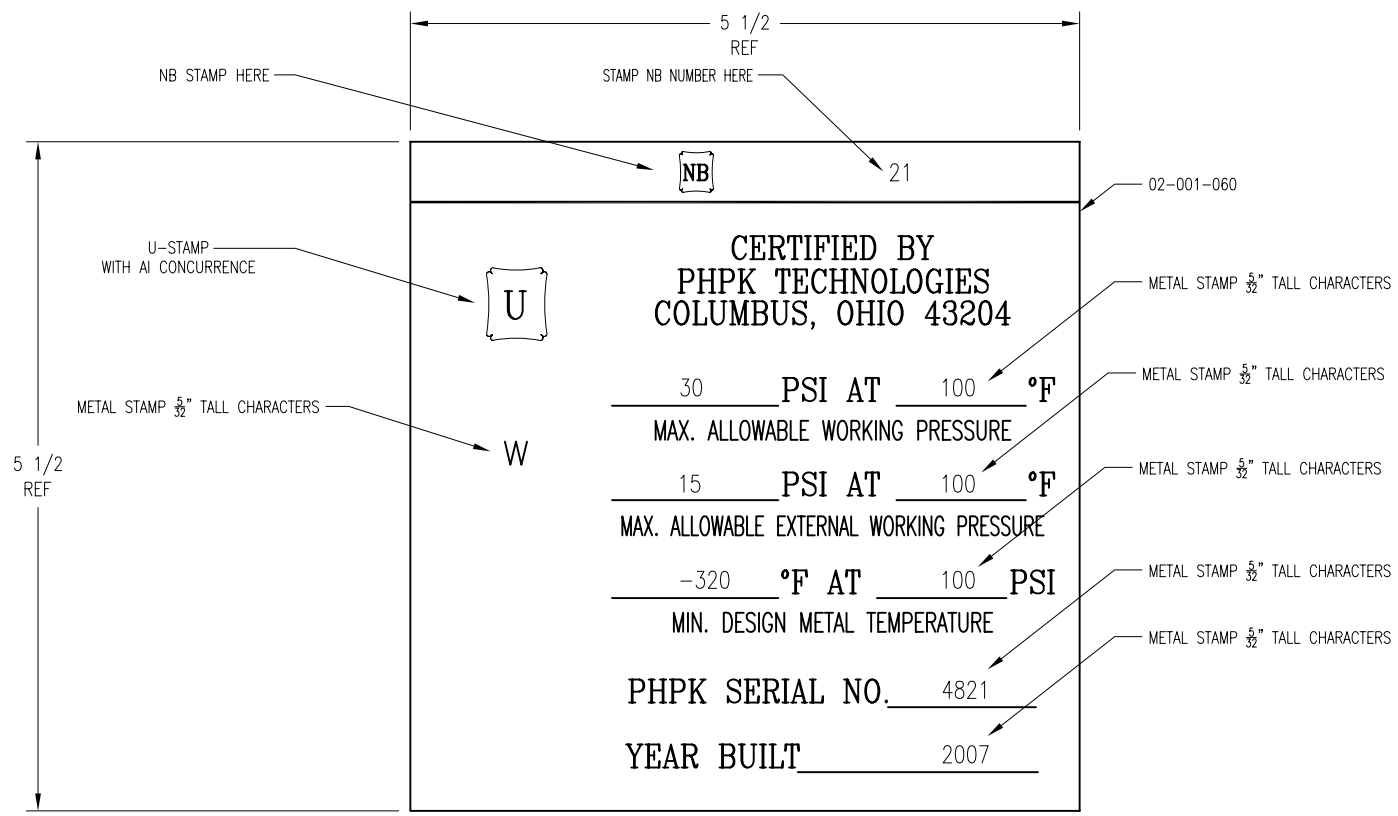

DETAIL, ITEM 85

1 REQ'D.
SCALE 5X

SEE 07-2032-BM-6501 FOR BILL OF MATERIALS.

INFORMATION SHOWN ON THIS DRAWING IS PROPRIETARY AND THE SOLE PROPERTY OF PHPK AND IS NOT TO BE DISCLOSED OR TRANSMITTED TO UNAUTHORIZED PARTIES.

–	07-2032	·	07-2032-6501	1	07-2032-6500	B
WEIGHT	COST CENTER	CONTRACT NO.	PART NUMBER	NO. REQ'D	NEXT ASSEMBLY	SIZE

DRAWN	CD	TOLERANCES	
CHECKED	SW	FRACTION	±1/16"
ENGINEER	SW	.XX	±.01
		.XXX	±.005
REVIEWED		ANGULAR	±5°
REL. DATE	11-7-07		3340
			EDR

DIMENSIONS ARE PROVIDED PRIOR TO SURFACE TREATMENTS UNLESS NOTED.

PHPK TECHNOLOGIES
2111 BUILDERS PLACE COLUMBUS, OHIO 43204

TITLE
YALE T962 CRYOSTAT
INNER VESSEL WELDMENT

SIZE	DRAWING NO.	CHG.
B	07-2032-6501	N/C

SCALE 1=8 SHEET 9 OF 9

REVISIONS

CHG.	DATE	EDR	DWN.	CH'KD.	APP'D.	REV'D.	DESCRIPTION
·	·	·	·	·	·	·	·

NOZZLE SCHEDULE

MARK	SIZE	FUNCTION
N4	14" SCH 30	ACCESS PORT
N5	2" OD X .065" WALL TUBE	PUMP-OUT PORT
N6	2" OD X .065" WALL TUBE	PUMP-OUT PORT
N7	1" OD X .065" WALL TUBE	PUMP-OUT PORT

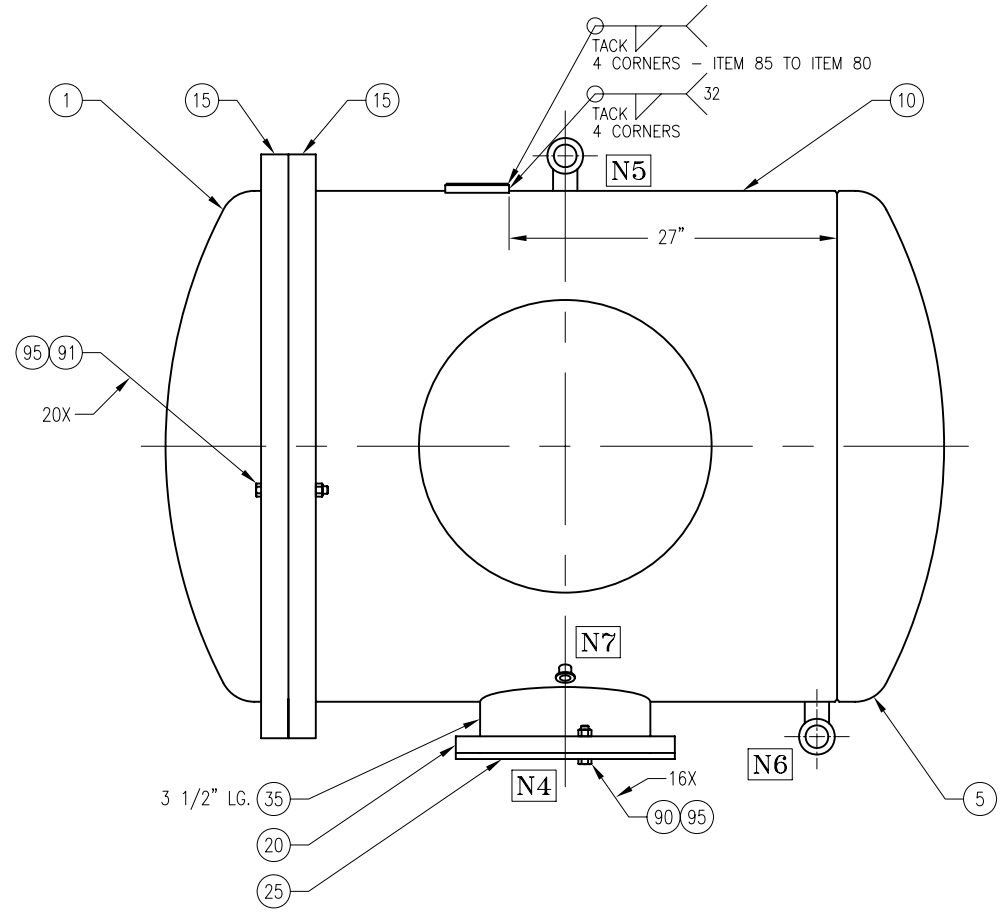

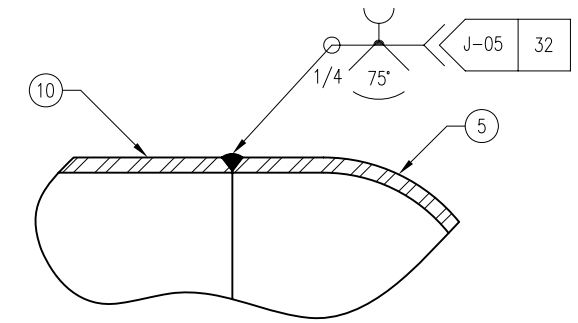

DETAIL "C"
SCALE: 5X

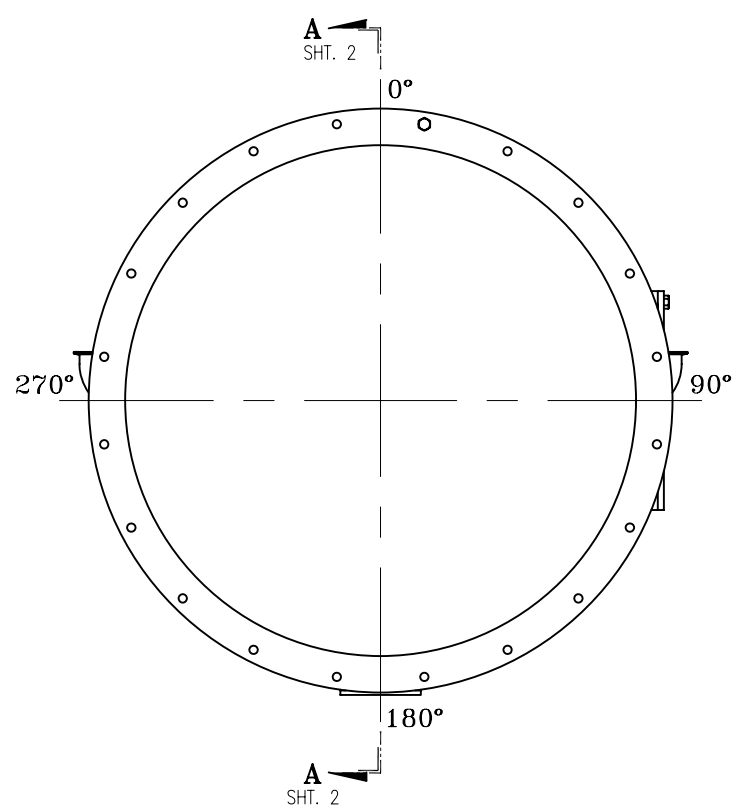

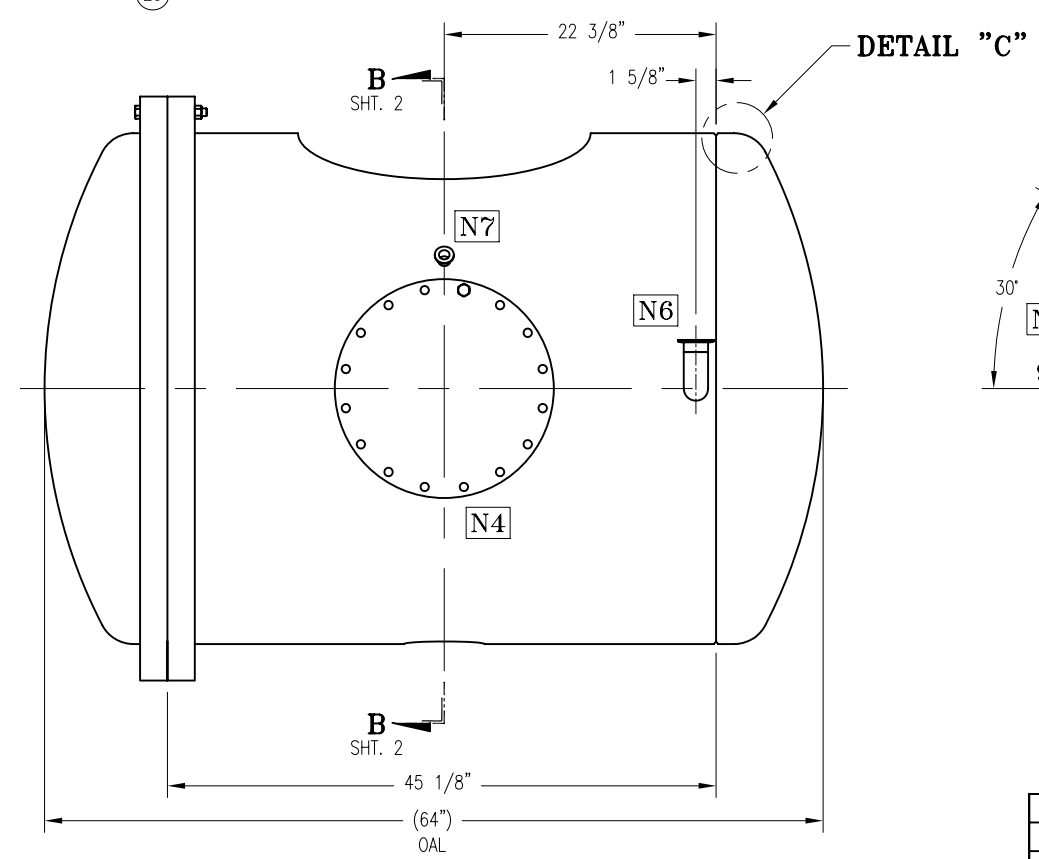

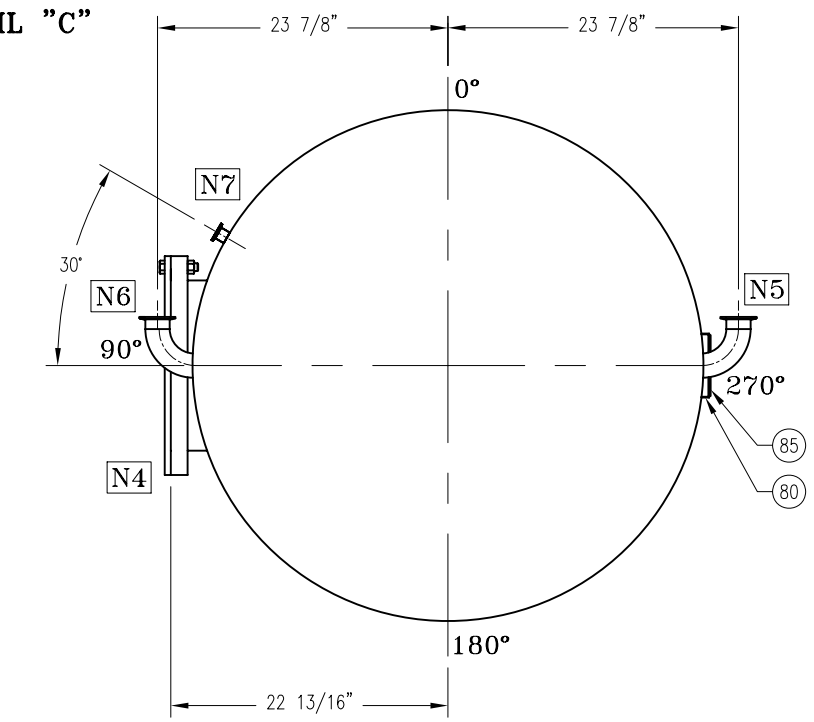

1) SEE 07-2032-BM-6502 FOR BILL OF MATERIALS.

GENERAL NOTES:

N/C	N/C	N/C	N/C	N/C	N/C	N/C	N/C	REV LETTER
8	7	6	5	4	3	2	1	SHEET NUMBER

INFORMATION SHOWN ON THIS DRAWING IS PROPRIETARY AND THE SOLE PROPERTY OF PHPK AND IS NOT TO BE DISCLOSED OR TRANSMITTED TO UNAUTHORIZED PARTIES.

–	07-2032	·	07-2032-6502	1	07-2032-6500	B
WEIGHT	COST CENTER	CONTRACT NO.	PART NUMBER	NO. REQ'D	NEXT ASSEMBLY	SIZE

		TOLERANCES	
DRAWN	CD	FRACTION	±1/16"
CHECKED	SW	.XX	±.01
ENGINEER	SW	.XXX	±.005
REVIEWED		ANGULAR	±5°
REL. DATE	11-14-07	3348	EDR

DIMENSIONS ARE PROVIDED PRIOR TO SURFACE TREATMENTS UNLESS NOTED.

PHPK TECHNOLOGIES
2111 BUILDERS PLACE COLUMBUS, OHIO 43204

TITLE
YALE T962 CRYOSTAT
OUTER VESSEL WELDMENT

SIZE	DRAWING NO.	CHG.
B	07-2032-6502	N/C

SCALE 1=16 SHEET 1 OF 8

v3.10.15 65/156

REVISIONS

CHG.	DATE	EDR	DWN.	CH'KD.	APP'D.	REV'D.	DESCRIPTION
.	.	.	.	.	.	.	.

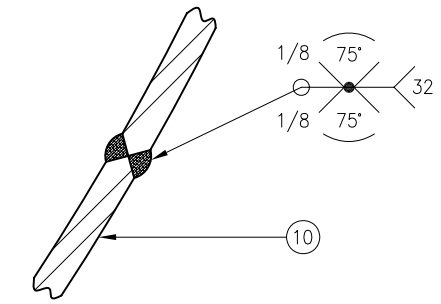

DETAIL "D"

SCALE: 8X

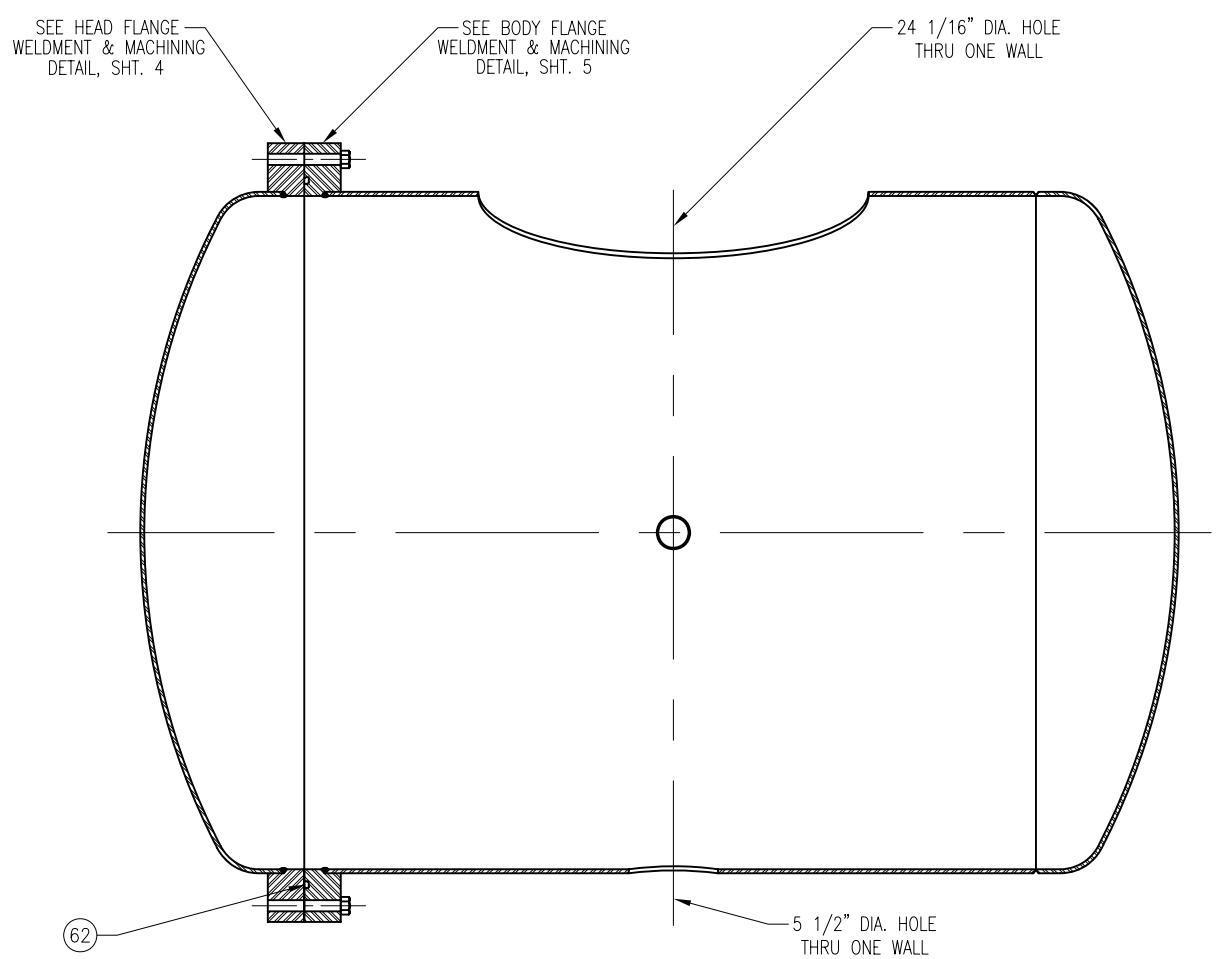

SECTION "A–A"

(FROM SHT. 1)

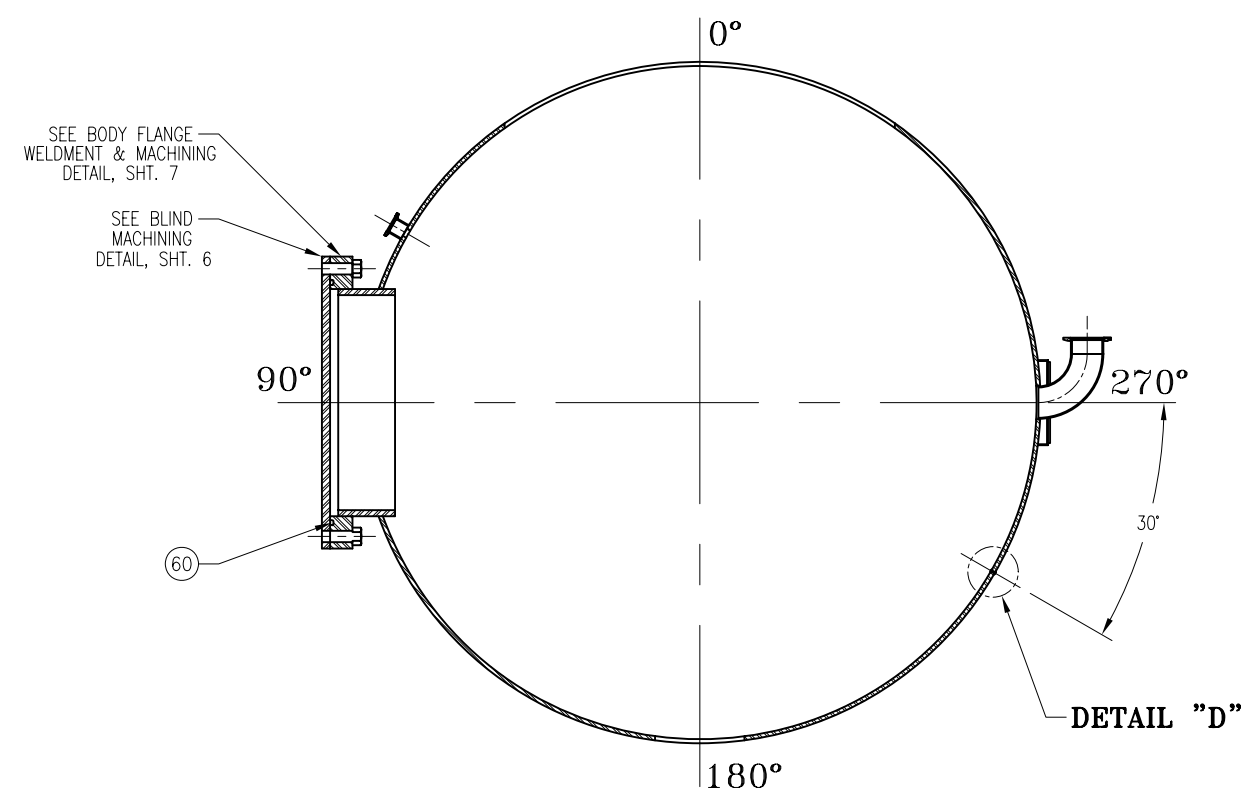

SECTION "B–B"

(FROM SHT. 1)

SEE 07–2032–BM–6502 FOR BILL OF MATERIALS.

REVISIONS							
CHG.	DATE	EDR	DWN.	CH'KD.	APP'D.	REV'D.	DESCRIPTION
.	.	.	.	.	.	.	.

INFORMATION SHOWN ON THIS DRAWING IS PROPRIETARY AND THE SOLE PROPERTY OF PHPK AND IS NOT TO BE DISCLOSED OR TRANSMITTED TO UNAUTHORIZED PARTIES.

–	07–2032	·	07–2032–6502	1	07–2032–6500	B
WEIGHT	COST CENTER	CONTRACT NO.	PART NUMBER	NO. REQ'D	NEXT ASSEMBLY	SIZE

DRAWN	CD	TOLERANCES	
CHECKED	SW	FRACTION	±1/16"
ENGINEER	SW	.XX	±.01
		.XXX	±.005
REVIEWED		ANGULAR	±5°
REL. DATE	11–14–07		3348
			EDR

DIMENSIONS ARE PROVIDED PRIOR TO SURFACE TREATMENTS UNLESS NOTED.

PHPK TECHNOLOGIES
2111 BUILDERS PLACE COLUMBUS, OHIO 43204

TITLE
YALE T962 CRYOSTAT
OUTER VESSEL WELDMENT

SIZE	DRAWING NO.	CHG.
B	07–2032–6502	N/C

SCALE 1=12 SHEET 2 OF 8

v3.10.15 66/156

v3.10.15 67/156

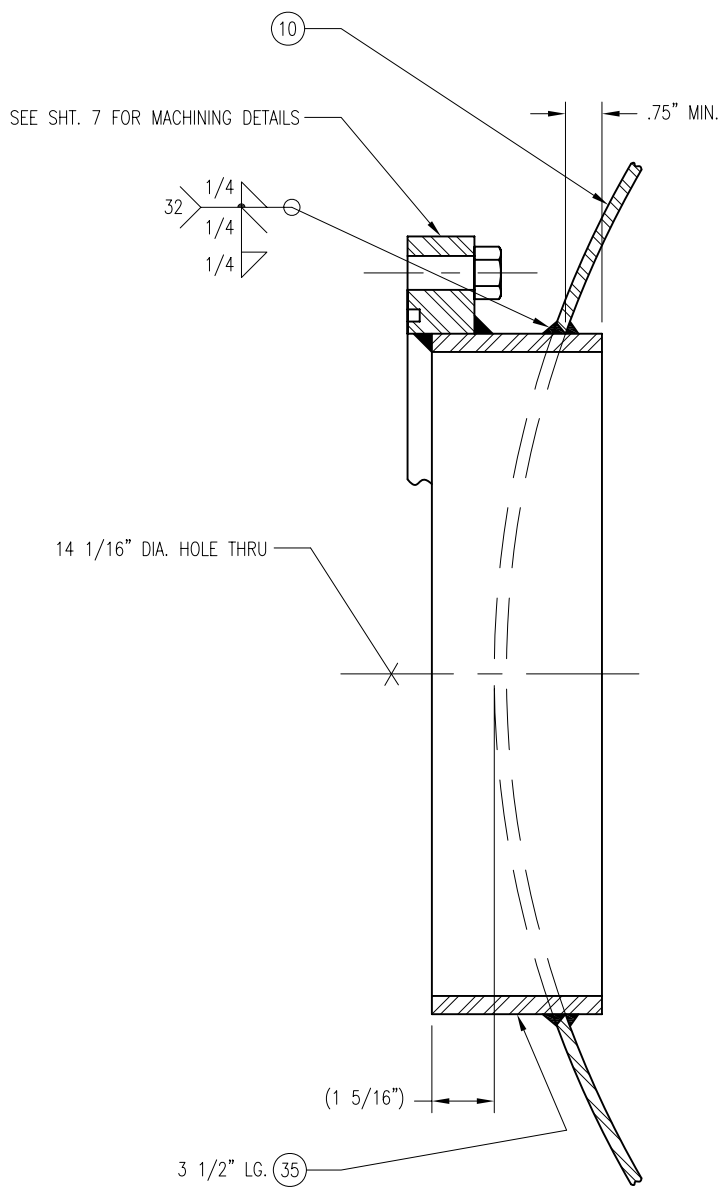

NOZZLE DETAIL: "N4"
(FROM SHT. 2)

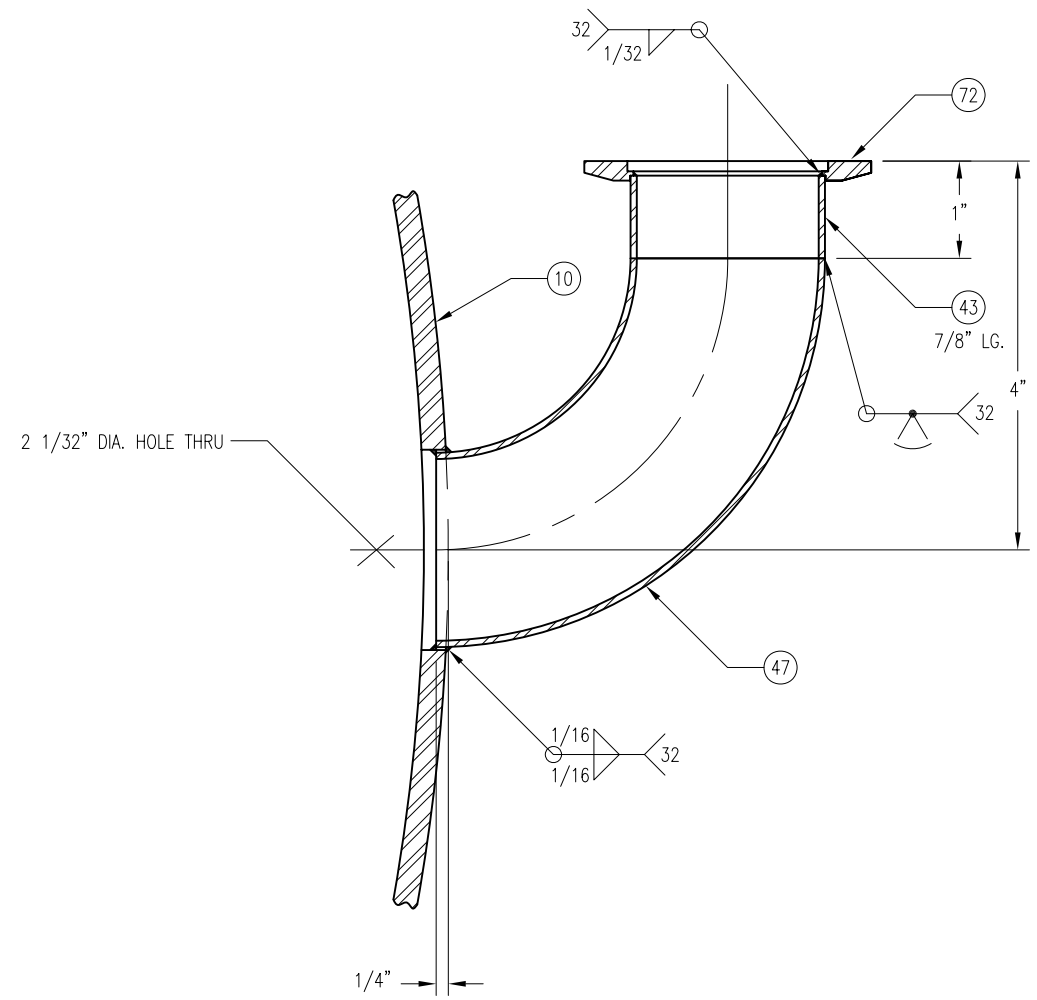

NOZZLE DETAIL: "N5 & N6"
(FROM SHT. 2)
SCALE: 2X

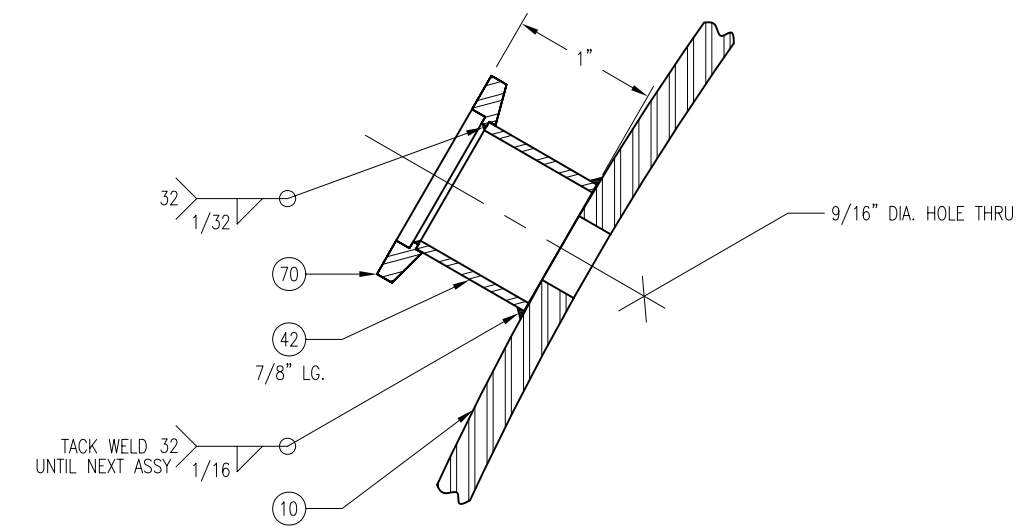

NOZZLE DETAIL: "N7"
(FROM SHT. 2)
SCALE: 3X

SEE 07-2032-BM-6502 FOR BILL OF MATERIALS.

REVISIONS

CHG.	DATE	EDR	DWN.	CH'KD.	APP'D.	REV'D.	DESCRIPTION
.	.	.	.	.	.	.	.

–	07-2032	·	07-2032-6502	1	07-2032-6500	B
WEIGHT	COST CENTER	CONTRACT NO.	PART NUMBER	NO. REQ'D	NEXT ASSEMBLY	SIZE

		TOLERANCES	
DRAWN	CD		
CHECKED	SW	FRACTION	±1/16"
ENGINEER	SW	.XX	±.01
		.XXX	±.005
REVIEWED		ANGULAR	±5°
REL. DATE	11-14-07		3348
			EDR

DIMENSIONS ARE PROVIDED PRIOR TO SURFACE TREATMENTS UNLESS NOTED.

INFORMATION SHOWN ON THIS DRAWING IS PROPRIETARY AND THE SOLE PROPERTY OF PHPK AND IS NOT TO BE DISCLOSED OR TRANSMITTED TO UNAUTHORIZED PARTIES.

PHPK TECHNOLOGIES
2111 BUILDERS PLACE COLUMBUS, OHIO 43204

TITLE
YALE T962 CRYOSTAT
OUTER VESSEL WELDMENT

SIZE	DRAWING NO.	CHG.
B	07-2032-6502	N/C

SCALE 1=4 SHEET 3 OF 8

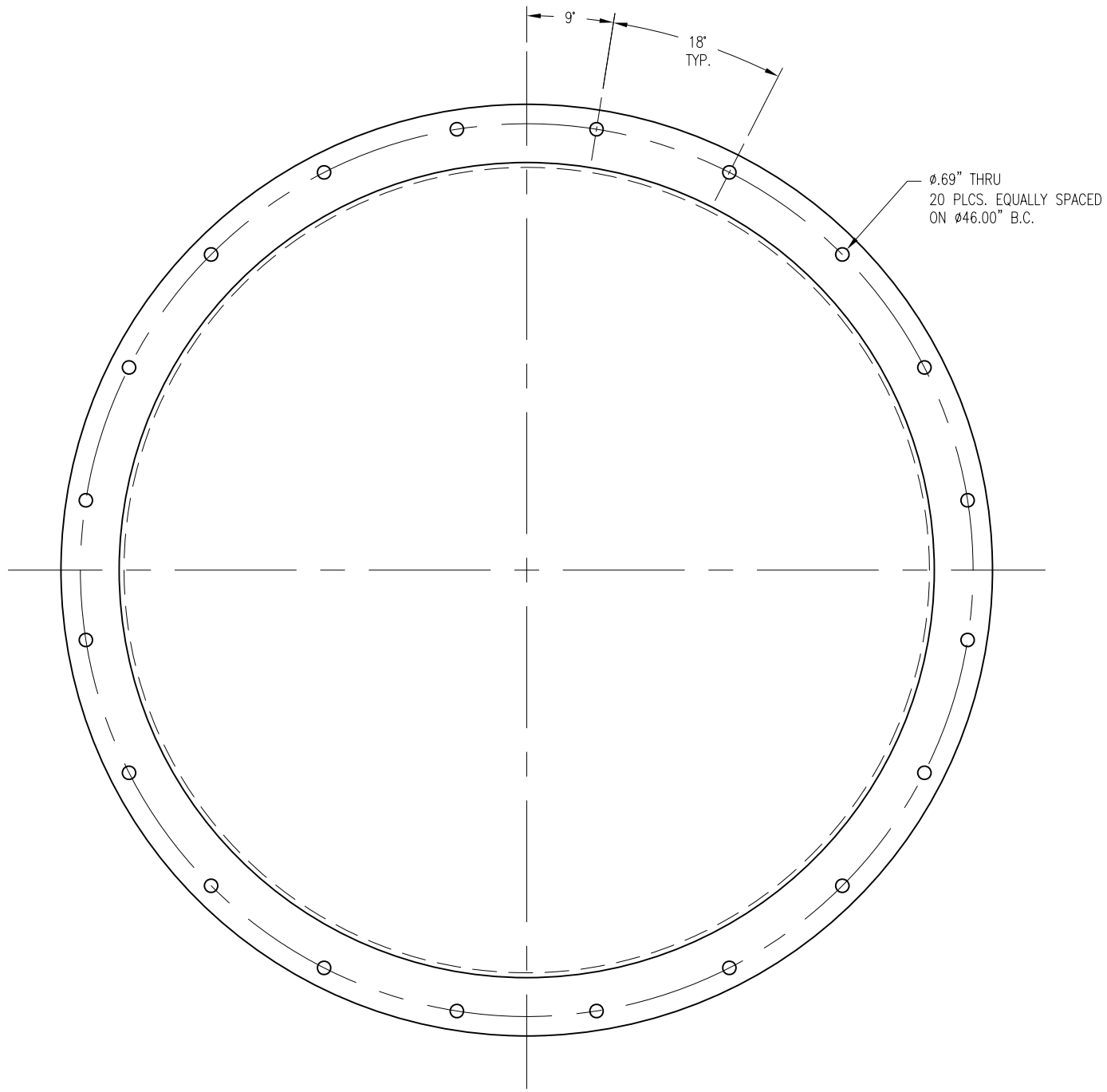

FLANGE WELDMENT (HEAD)
& MACHINING DETAIL
(FROM SHT. 2)

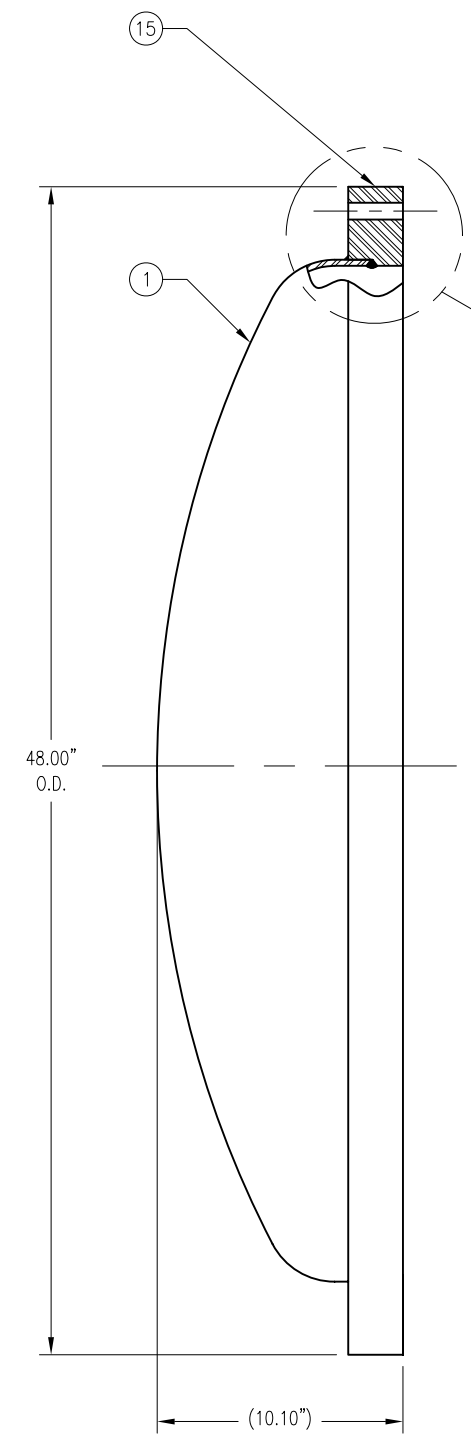

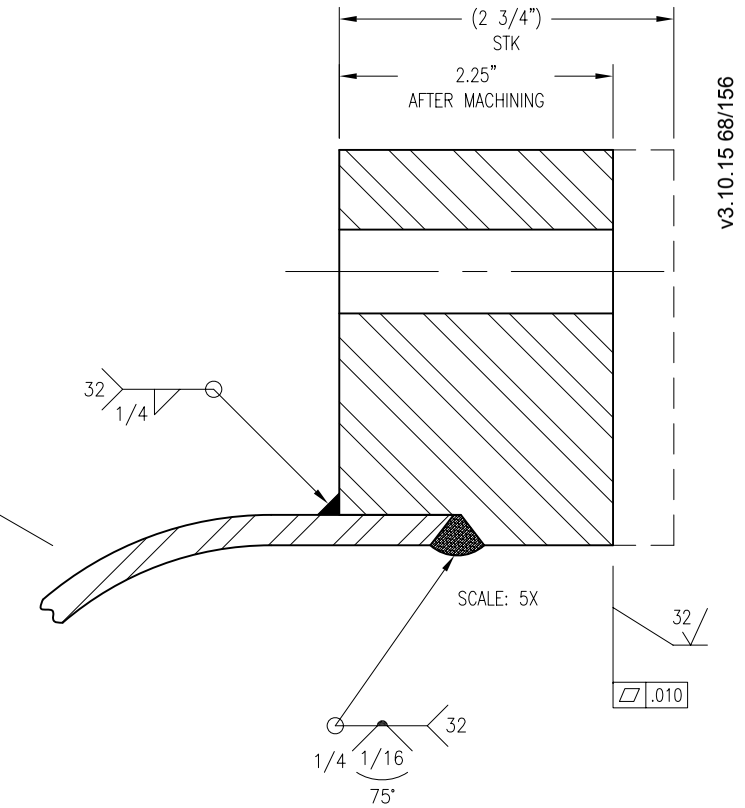

v3.10.15 68/156

SEE 07-2032-BM-6502 FOR BILL OF MATERIALS.

REVISIONS

CHG.	DATE	EDR	DWN.	CH'KD.	APP'D.	REV'D.	DESCRIPTION
.	.	.	.	.	.	.	.

–	07-2032	·	07-2032-6502	1	07-2032-6500	B
WEIGHT	COST CENTER	CONTRACT NO.	PART NUMBER	NO. REQ'D	NEXT ASSEMBLY	SIZE

DRAWN	CD	TOLERANCES	
CHECKED	SW	FRACTION	±1/16"
ENGINEER	SW	.XX	±.01
		.XXX	±.005
REVIEWED		ANGULAR	±5°
REL. DATE	11-14-07	3348	
		EDR	

DIMENSIONS ARE PROVIDED PRIOR TO SURFACE TREATMENTS UNLESS NOTED.

INFORMATION SHOWN ON THIS DRAWING IS PROPRIETARY AND THE SOLE PROPERTY OF PHPK AND IS NOT TO BE DISCLOSED OR TRANSMITTED TO UNAUTHORIZED PARTIES.

PHPK TECHNOLOGIES
2111 BUILDERS PLACE COLUMBUS, OHIO 43204

TITLE
YALE T962 CRYOSTAT
OUTER VESSEL WELDMENT

SIZE	DRAWING NO.	CHG.
B	07-2032-6502	N/C

SCALE 1=8 SHEET 4 OF 8

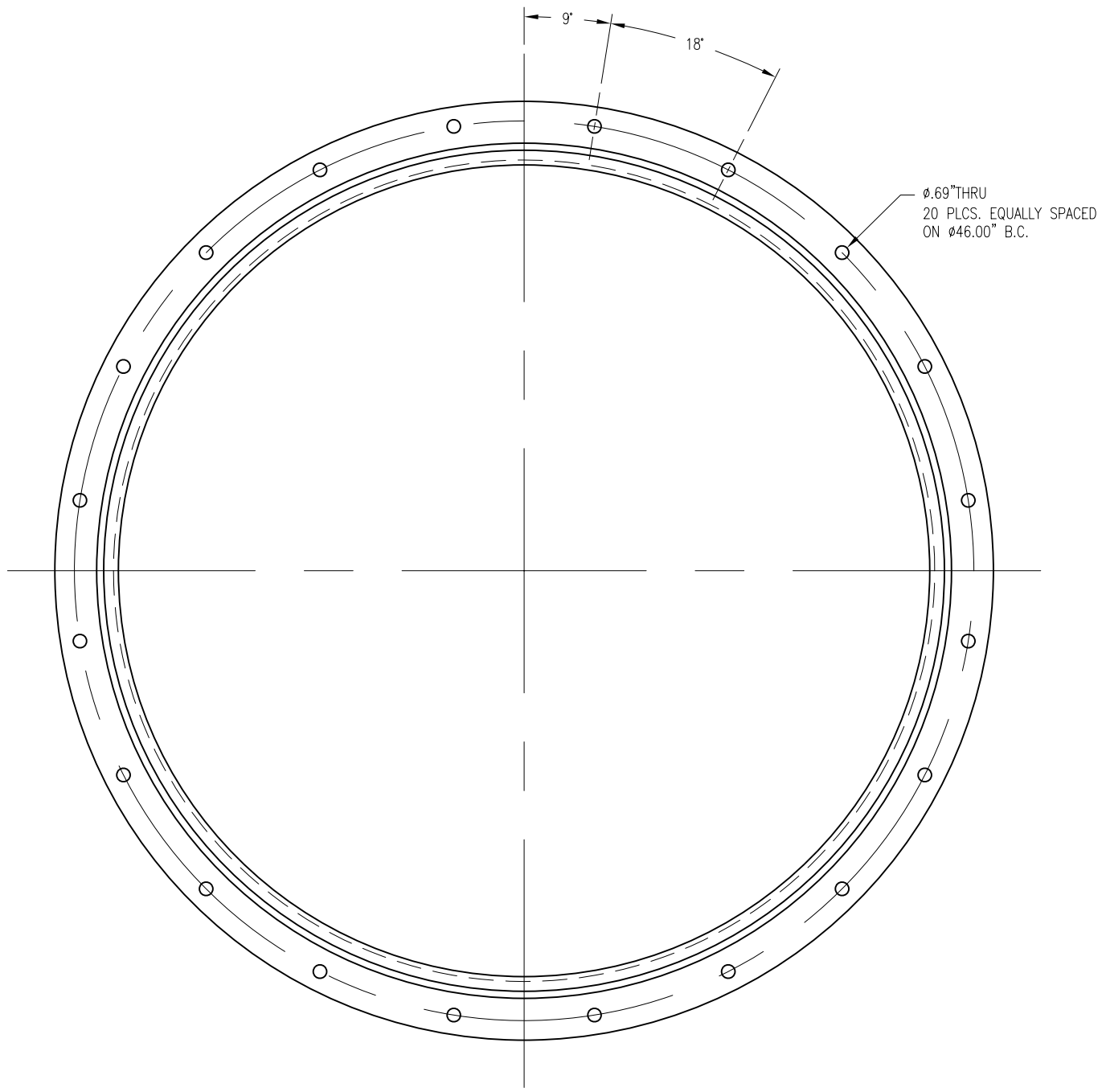

FLANGE WELDMENT (BODY)
& MACHINING DETAIL
(FROM SHT. 2)

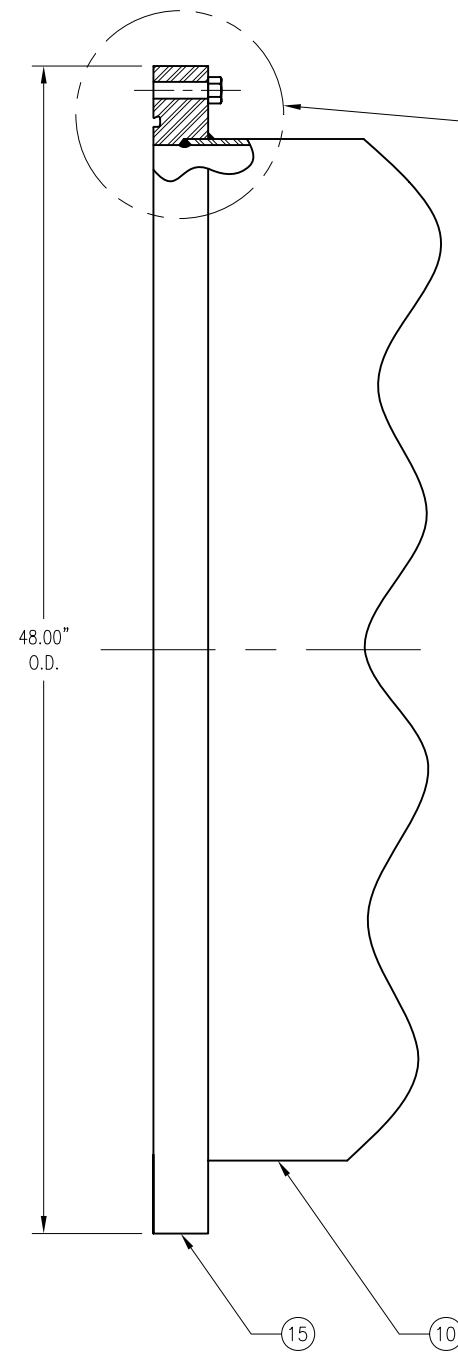

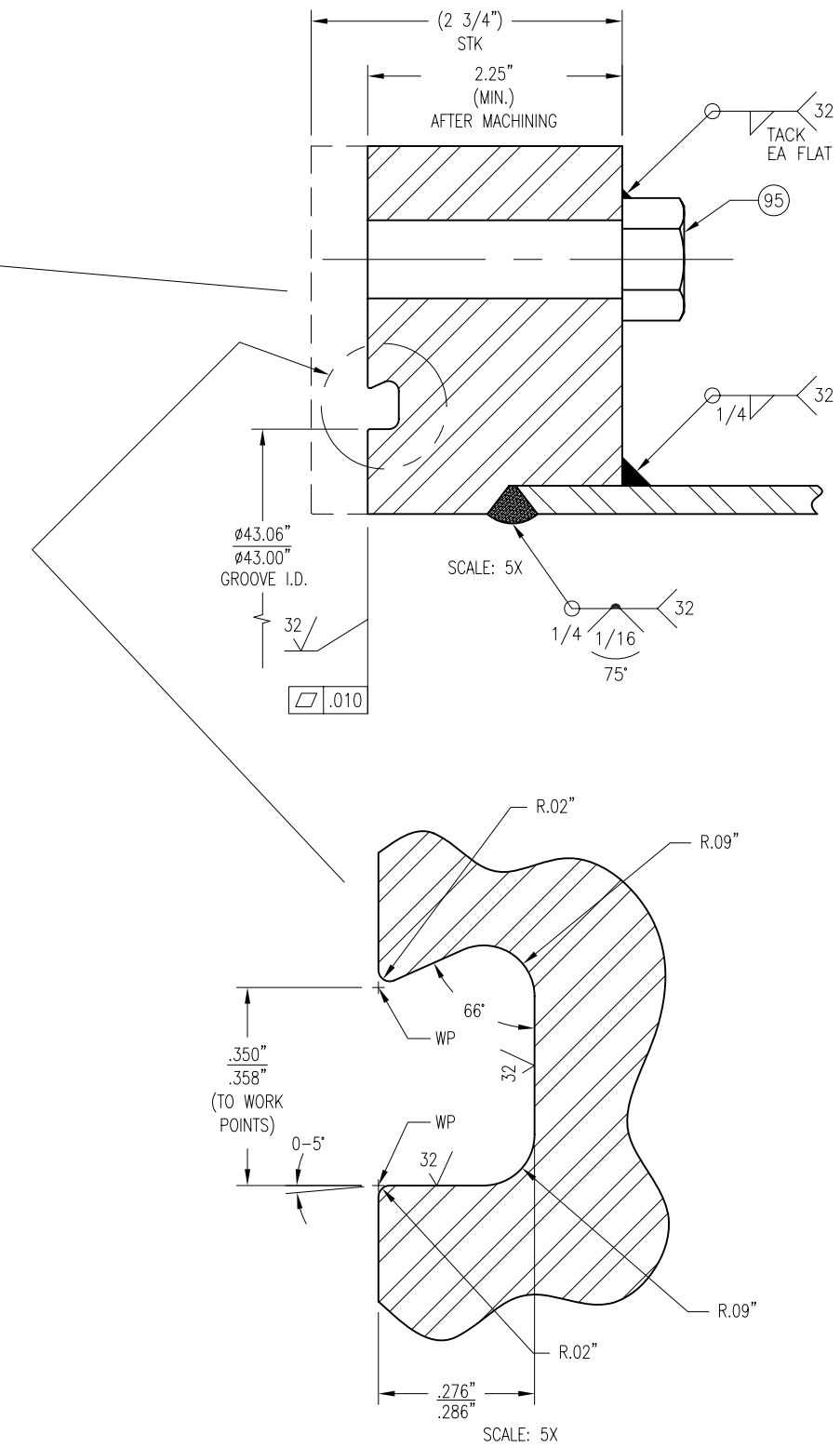

v3.10.15 69/156

REVISIONS

CHG.	DATE	EDR	DWN.	CH'KD.	APP'D.	REV'D.	DESCRIPTION
.	.	.	.	.	.	.	.

SEE 07-2032-BM-6502 FOR BILL OF MATERIALS.

–	07-2032	·	07-2032-6502	1	07-2032-6500	B
WEIGHT	COST CENTER	CONTRACT NO.	PART NUMBER	NO. REQ'D	NEXT ASSEMBLY	SIZE

DRAWN	CD	TOLERANCES	
CHECKED	SW	FRACTION	±1/16"
ENGINEER	SW	.XX	±.01
		.XXX	±.005
REVIEWED		ANGULAR	±5°
REL. DATE	11-14-07	3348	
		EDR	

DIMENSIONS ARE PROVIDED PRIOR TO SURFACE TREATMENTS UNLESS NOTED.

INFORMATION SHOWN ON THIS DRAWING IS PROPRIETARY AND THE SOLE PROPERTY OF PHPK AND IS NOT TO BE DISCLOSED OR TRANSMITTED TO UNAUTHORIZED PARTIES.

PHPK TECHNOLOGIES
2111 BUILDERS PLACE COLUMBUS, OHIO 43204

TITLE
YALE T962 CRYOSTAT
OUTER VESSEL WELDMENT

SIZE	DRAWING NO.	CHG.
B	07-2032-6502	N/C

SCALE 1=8 SHEET 5 OF 8

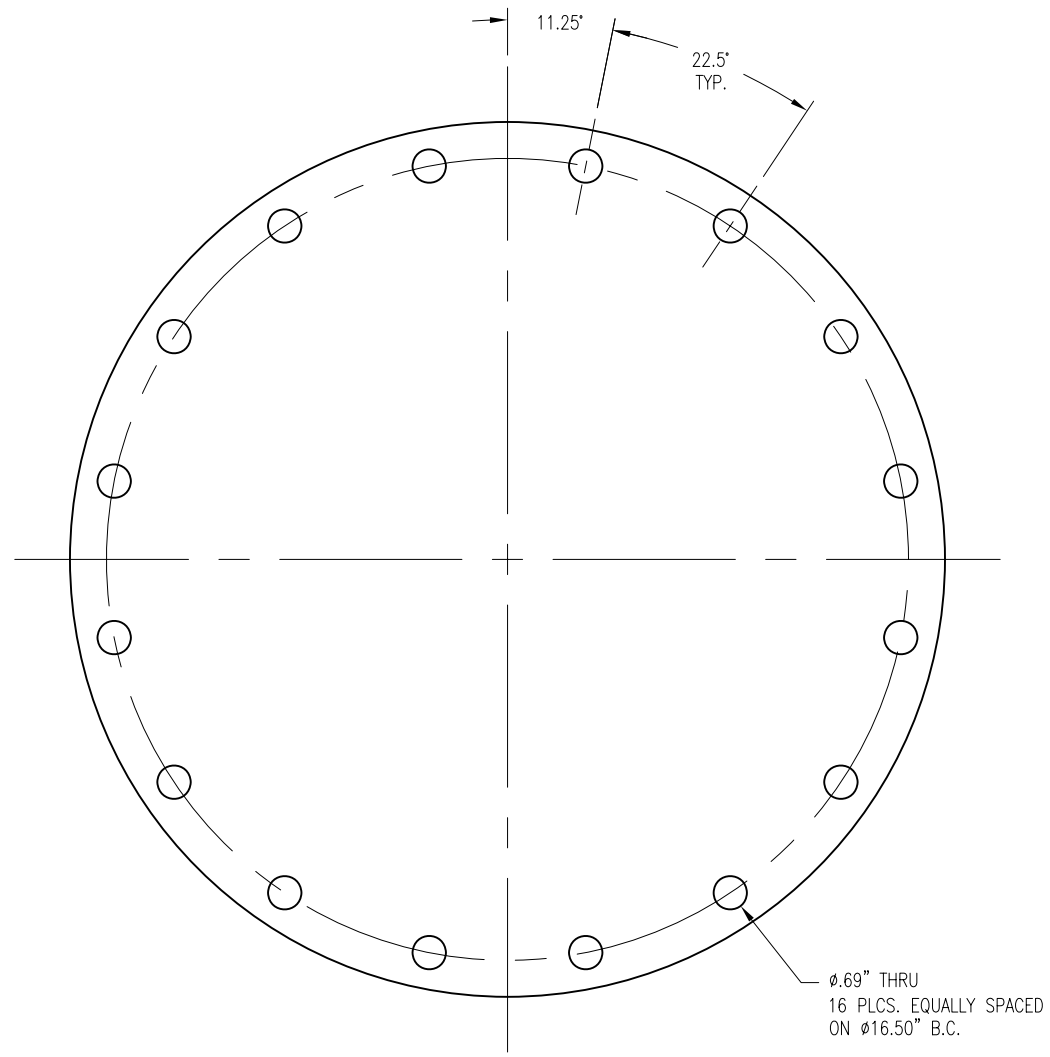

BLIND MACHINING DETAIL

(FROM SHT. 2)

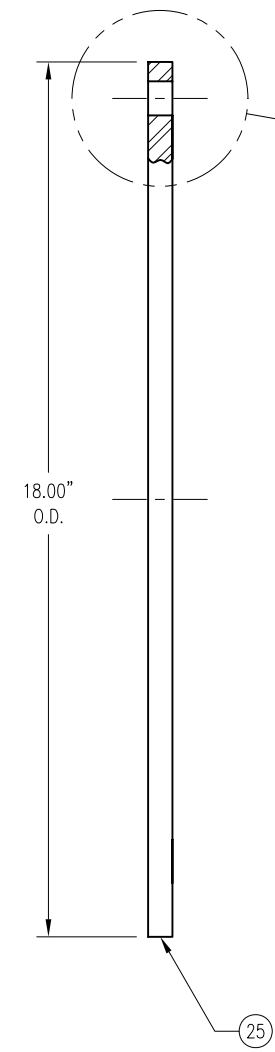

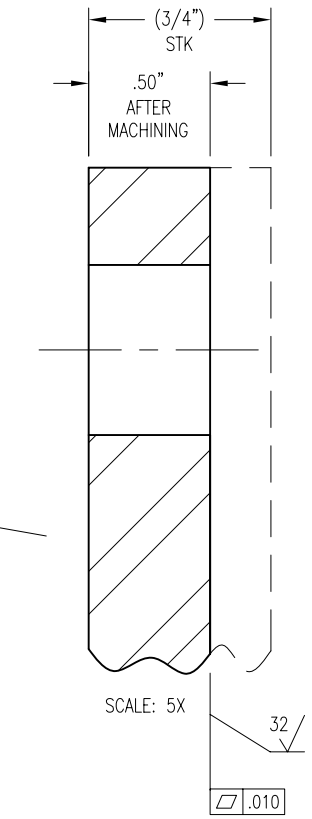

v3.10.15 70/156

SEE 07-2032-BM-6502 FOR BILL OF MATERIALS.

REVISIONS

CHG.	DATE	EDR	DWN.	CH'KD.	APP'D.	REV'D.	DESCRIPTION
.	.	.	.	.	.	.	.

–	07-2032	·	07-2032-6502	1	07-2032-6500	B
WEIGHT	COST CENTER	CONTRACT NO.	PART NUMBER	NO. REQ'D	NEXT ASSEMBLY	SIZE

DRAWN	CD	TOLERANCES	
CHECKED	SW	FRACTION	±1/16"
ENGINEER	SW	.XX	±.01
		.XXX	±.005
REVIEWED		ANGULAR	±5°
REL. DATE	11-14-07		3348
			EDR

DIMENSIONS ARE PROVIDED PRIOR TO SURFACE TREATMENTS UNLESS NOTED.

INFORMATION SHOWN ON THIS DRAWING IS PROPRIETARY AND THE SOLE PROPERTY OF PHPK AND IS NOT TO BE DISCLOSED OR TRANSMITTED TO UNAUTHORIZED PARTIES.

PHPK TECHNOLOGIES
2111 BUILDERS PLACE COLUMBUS, OHIO 43204

TITLE
YALE T962 CRYOSTAT
OUTER VESSEL WELDMENT

SIZE	DRAWING NO.	CHG.
B	07-2032-6502	N/C

SCALE 1=4 SHEET 6 OF 8

REVISIONS							
CHG.	DATE	EDR	DWN.	CH'KD.	APP'D.	REV'D.	DESCRIPTION
.	.	.	.	.	.	.	.

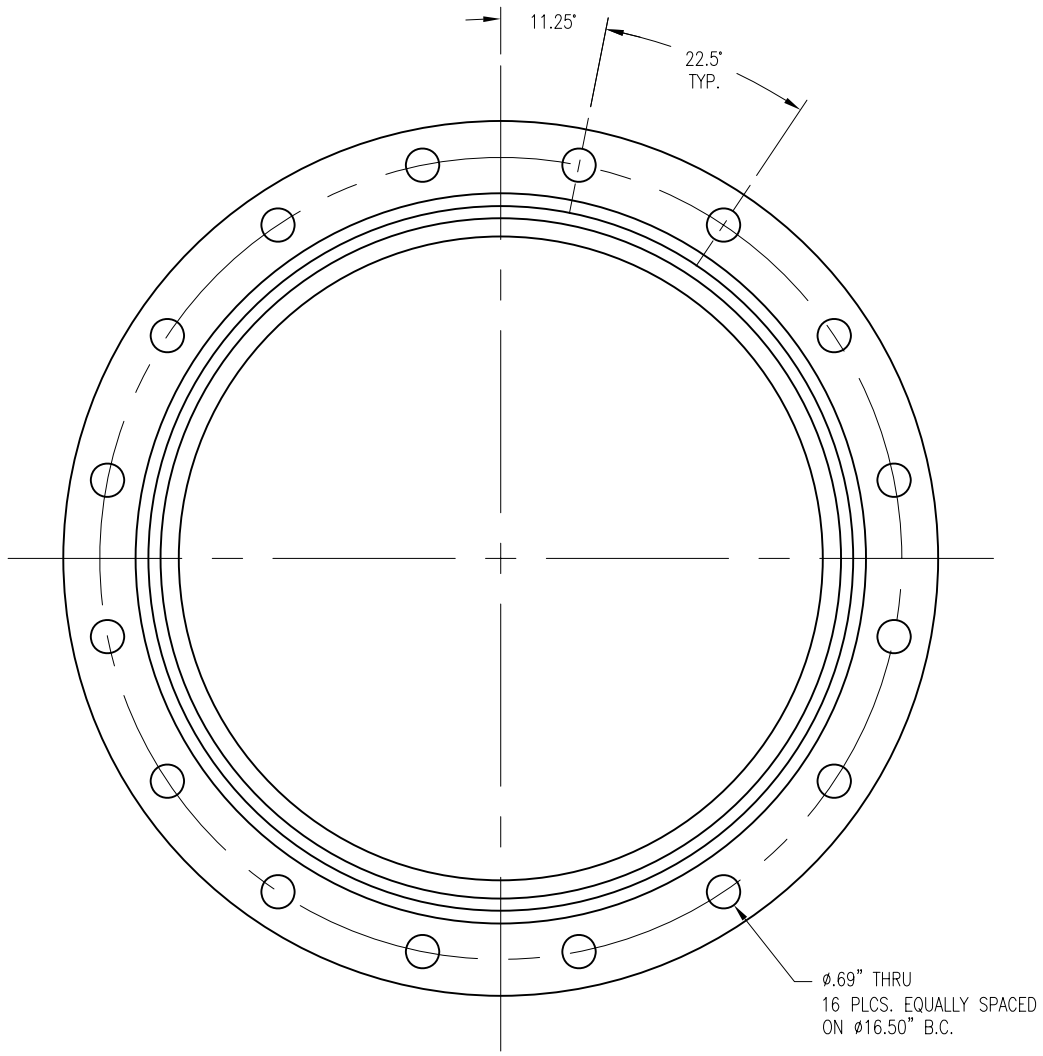

FLANGE WELDMENT (BODY)
& MACHINING DETAIL
(FROM SHT. 2)

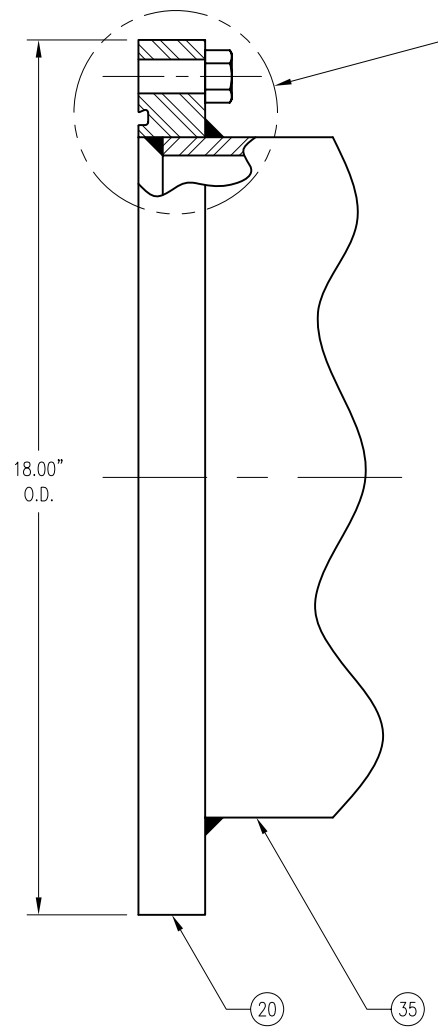

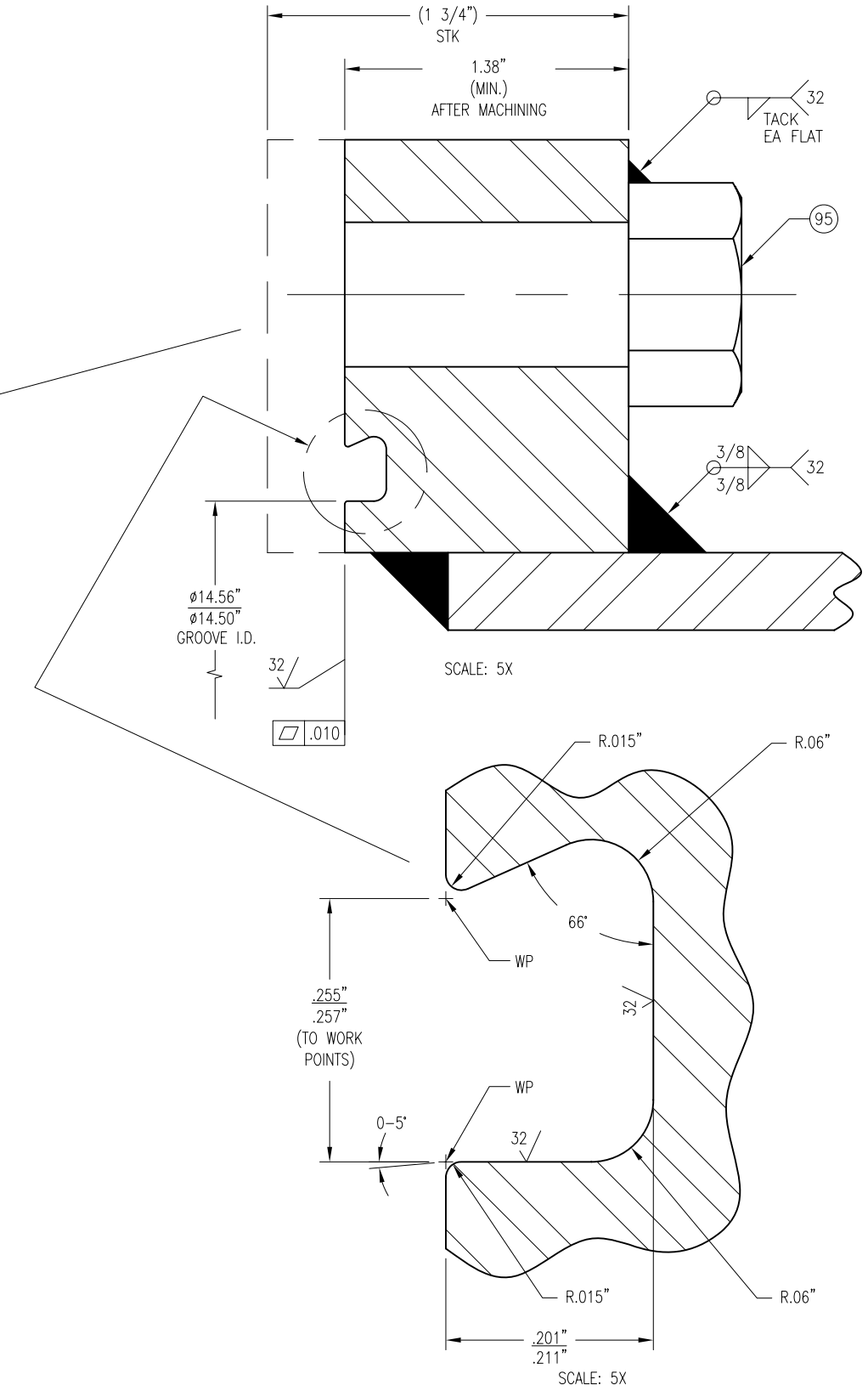

v3.10.15 71/156

SEE 07-2032-BM-6502 FOR BILL OF MATERIALS.

–	07-2032	·	07-2032-6502	1	07-2032-6500	B
WEIGHT	COST CENTER	CONTRACT NO.	PART NUMBER	NO. REQ'D	NEXT ASSEMBLY	SIZE

		TOLERANCES	
DRAWN	CD		
CHECKED	SW	FRACTION	±1/16"
ENGINEER	SW	.XX	±.01
		.XXX	±.005
REVIEWED		ANGULAR	±5°
REL. DATE	11-14-07		3348
			EDR

DIMENSIONS ARE PROVIDED PRIOR TO SURFACE TREATMENTS UNLESS NOTED.

INFORMATION SHOWN ON THIS DRAWING IS PROPRIETARY AND THE SOLE PROPERTY OF PHPK AND IS NOT TO BE DISCLOSED OR TRANSMITTED TO UNAUTHORIZED PARTIES.

PHPK TECHNOLOGIES
2111 BUILDERS PLACE COLUMBUS, OHIO 43204

TITLE
YALE T962 CRYOSTAT
OUTER VESSEL WELDMENT

SIZE	DRAWING NO.	CHG.
B	07-2032-6502	N/C

SCALE 1=4 SHEET 7 OF 8

v3.10.15 72/156

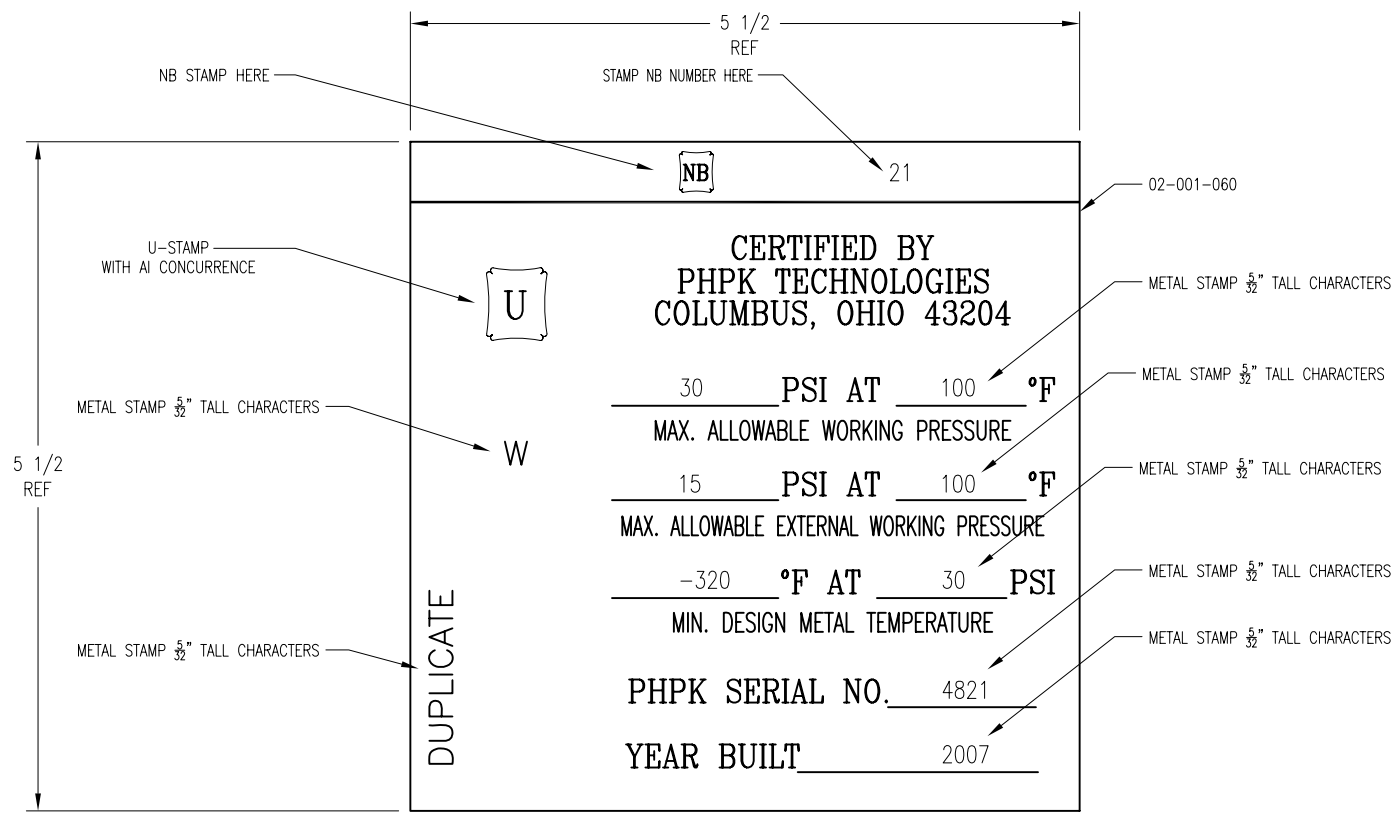

DETAIL, ITEM 85

NAMEPLATE- DUPLICATE
1 REQ'D.
SCALE 5X

SEE 07-2032-BM-6502 FOR BILL OF MATERIALS.

REVISIONS							
CHG.	DATE	EDR	DWN.	CH'KD.	APP'D.	REV'D.	DESCRIPTION
.	.	.	.	.	.	.	.

–	07-2032	·	07-2032-6502	1	07-2032-6500	B
WEIGHT	COST CENTER	CONTRACT NO.	PART NUMBER	NO. REQ'D	NEXT ASSEMBLY	SIZE

DRAWN	CD	TOLERANCES	
CHECKED	SW	FRACTION	±1/16"
ENGINEER	SW	.XX	±.01
		.XXX	±.005
REVIEWED		ANGULAR	±5°
REL. DATE	11-14-07	3348	
		EDR	

DIMENSIONS ARE PROVIDED PRIOR TO SURFACE TREATMENTS UNLESS NOTED.

INFORMATION SHOWN ON THIS DRAWING IS PROPRIETARY AND THE SOLE PROPERTY OF PHPK AND IS NOT TO BE DISCLOSED OR TRANSMITTED TO UNAUTHORIZED PARTIES.

PHPK TECHNOLOGIES
2111 BUILDERS PLACE COLUMBUS, OHIO 43204

TITLE
YALE T962 CRYOSTAT
OUTER VESSEL WELDMENT

SIZE	DRAWING NO.	CHG.
B	07-2032-6502	N/C

SCALE 1=8 SHEET 8 OF 8

NOZZLE SCHEDULE

MARK	SIZE	FUNCTION
N8	1 1/2" OD X .083" WALL TUBE	INSTRUMENT PORT
N9	1/2" OD TUBE, SWAGELOK FTG.	LIQUID FILL

v3.10.15 73/156

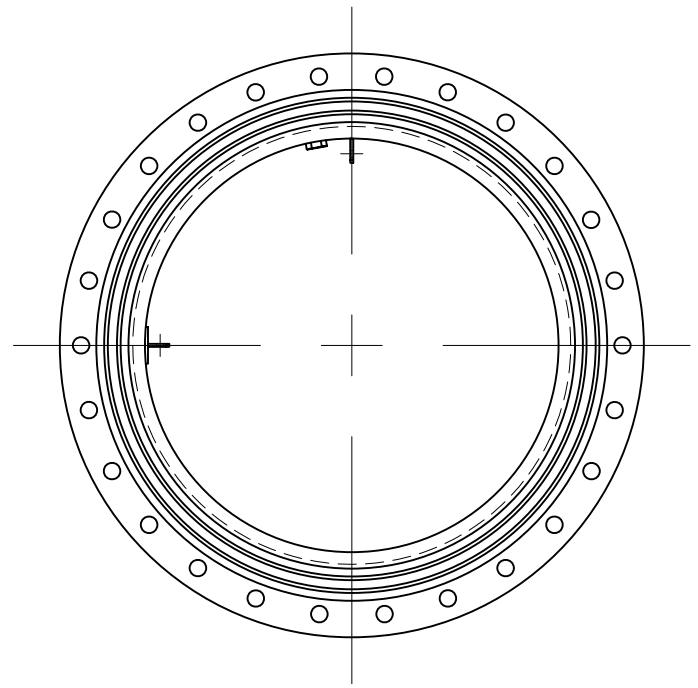

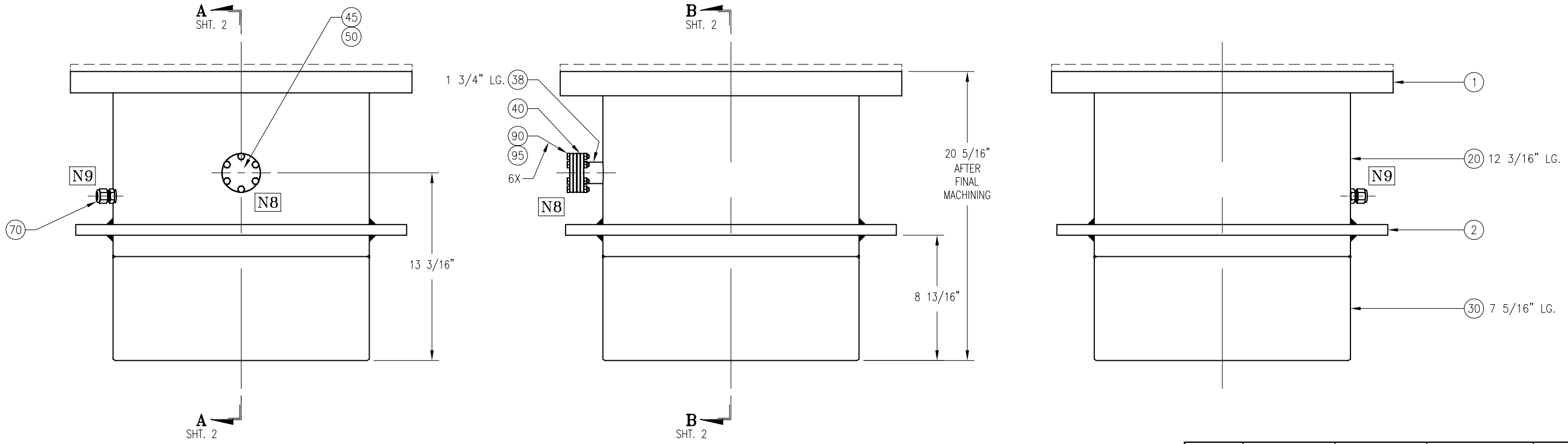

SEE 07-2032-BM-6503 FOR BILL OF MATERIALS.

REVISIONS

CHG.	DATE	EDR	DWN.	CH'KD.	APP'D.	REV'D.	DESCRIPTION
.	.	.	.	.	.	.	.

N/C	N/C	N/C	N/C	REV LETTER
4	3	2	1	SHEET NUMBER

INFORMATION SHOWN ON THIS DRAWING IS PROPRIETARY AND THE SOLE PROPERTY OF PHPK AND IS NOT TO BE DISCLOSED OR TRANSMITTED TO UNAUTHORIZED PARTIES.

WEIGHT	COST CENTER	CONTRACT NO.	PART NUMBER	NO. REQ'D	NEXT ASSEMBLY	SIZE
–	07-2032	·	07-2032-6503	1	07-2032-6500	B

DRAWN	CD	TOLERANCES	
CHECKED	SW	FRACTION	±1/16"
ENGINEER	SW	.XX	±.01
		.XXX	±.005
REVIEWED		ANGULAR	±5°
REL. DATE	11-20-07		3356
			EDR

DIMENSIONS ARE PROVIDED PRIOR TO SURFACE TREATMENTS UNLESS NOTED.

PHPK TECHNOLOGIES
2111 BUILDERS PLACE COLUMBUS, OHIO 43204

TITLE
YALE T962 CRYOSTAT
CHIMNEY WELDMENT

SIZE	DRAWING NO.	CHG.
B	07-2032-6503	N/C

SCALE 1=8

SHEET 1 OF 4

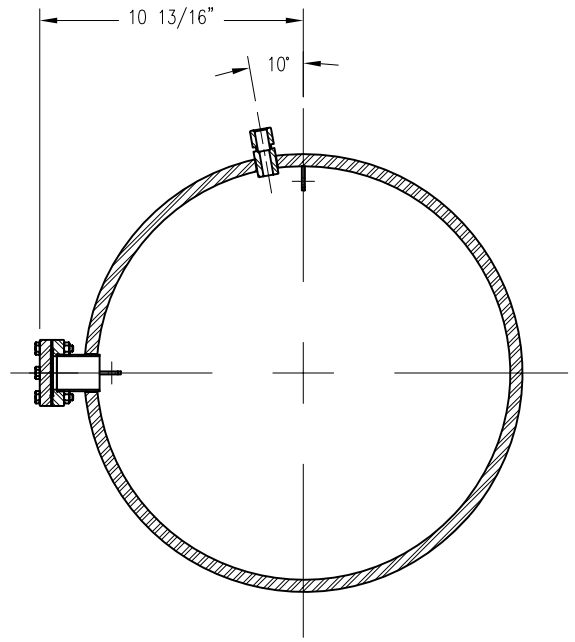

SECTION "C–C"

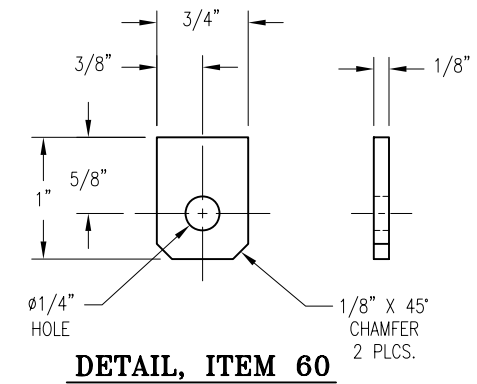

DETAIL, ITEM 60

4 REQ'D.
SCALE 5X

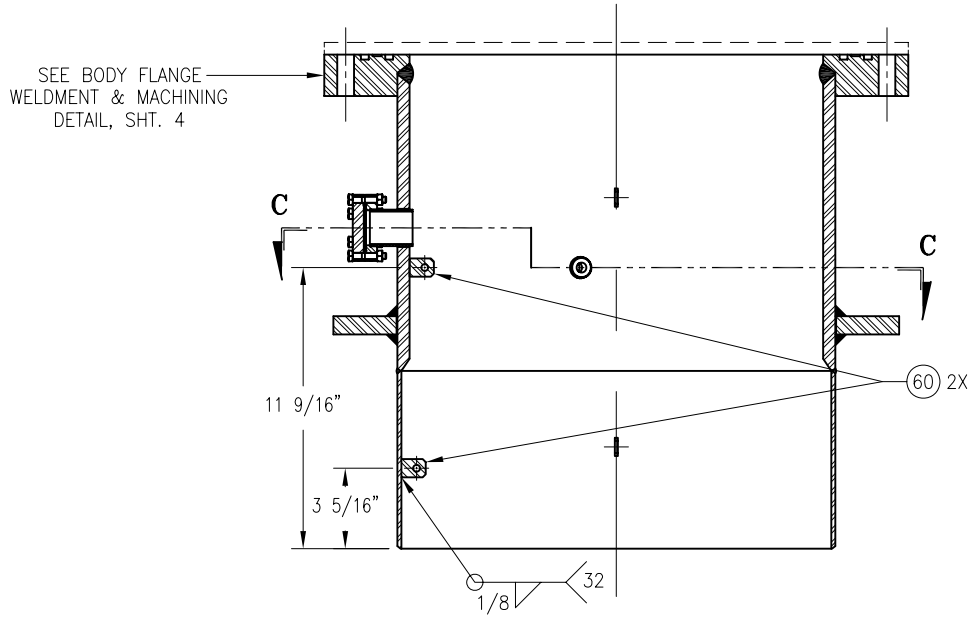

SECTION "A–A"

(FROM SHT. 2)

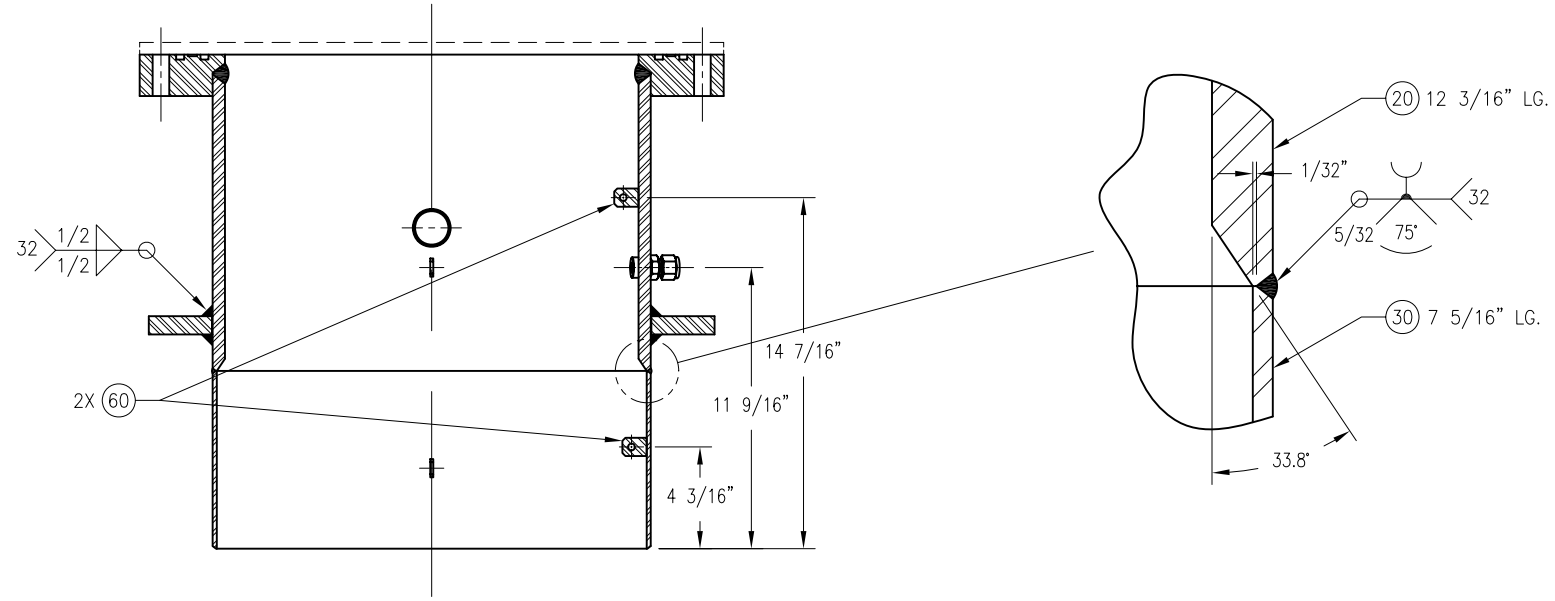

SECTION "B–B"

(FROM SHT. 2)

SEE 07-2032-BM-6503 FOR BILL OF MATERIALS.

REVISIONS

CHG.	DATE	EDR	DWN.	CH'KD.	APP'D.	REV'D.	DESCRIPTION
.	.	.	.	.	.	.	.

–	07-2032	·	07-2032-6503	1	07-2032-6500	B
WEIGHT	COST CENTER	CONTRACT NO.	PART NUMBER	NO. REQ'D	NEXT ASSEMBLY	SIZE

DRAWN	CD	TOLERANCES	
CHECKED	SW	FRACTION	±1/16"
ENGINEER	SW	.XX	±.01
		.XXX	±.005
REVIEWED		ANGULAR	±5°
REL. DATE	11-20-07		3356
			EDR

DIMENSIONS ARE PROVIDED PRIOR TO SURFACE TREATMENTS UNLESS NOTED.

INFORMATION SHOWN ON THIS DRAWING IS PROPRIETARY AND THE SOLE PROPERTY OF PHPK AND IS NOT TO BE DISCLOSED OR TRANSMITTED TO UNAUTHORIZED PARTIES.

PHPK TECHNOLOGIES
2111 BUILDERS PLACE COLUMBUS, OHIO 43204

TITLE
YALE T962 CRYOSTAT
CHIMNEY WELDMENT

SIZE	DRAWING NO.	CHG.
B	07-2032-6503	N/C

SCALE 1=8 SHEET 2 OF 4

v3.10.15 74/156

v3.10.15 75/156

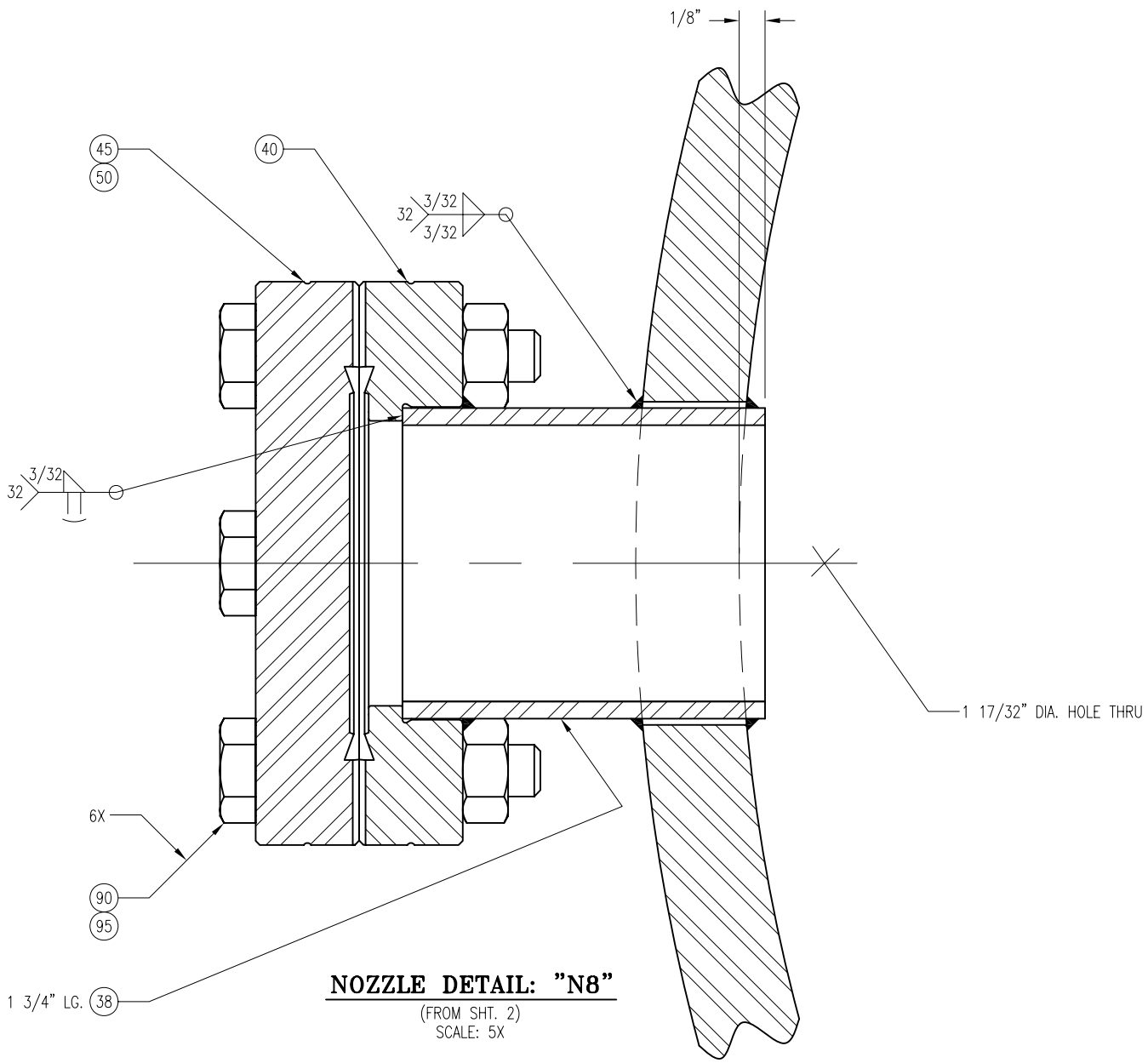

NOZZLE DETAIL: "N8"
(FROM SHT. 2)
SCALE: 5X

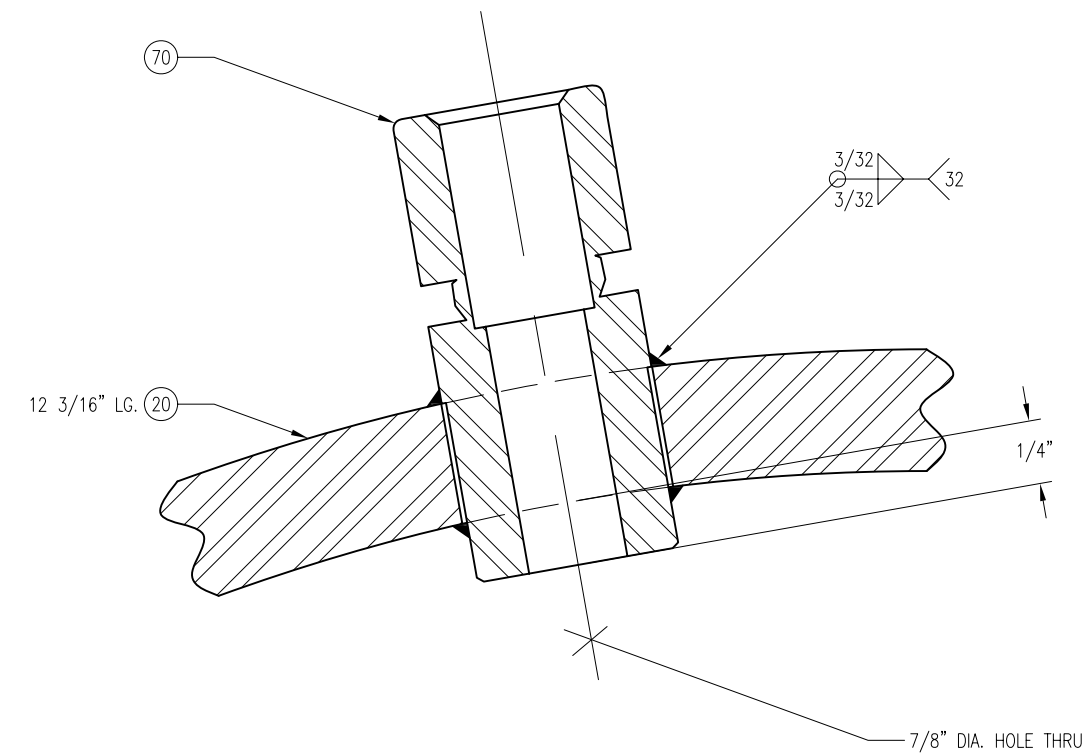

NOZZLE DETAIL: "N9"
(FROM SHT. 2)
SCALE: 5X

SEE 07-2032-BM-6503 FOR BILL OF MATERIALS.

REVISIONS

CHG.	DATE	EDR	DWN.	CH'KD.	APP'D.	REV'D.	DESCRIPTION
.	.	.	.	.	.	.	.

–	07-2032	·	07-2032-6503	1	07-2032-6500	B
WEIGHT	COST CENTER	CONTRACT NO.	PART NUMBER	NO. REQ'D	NEXT ASSEMBLY	SIZE

DRAWN	CD	TOLERANCES	
CHECKED	SW	FRACTION	±1/16"
ENGINEER	SW	.XX	±.01
		.XXX	±.005
REVIEWED		ANGULAR	±5°
REL. DATE	11-20-07	3356	
		EDR	

DIMENSIONS ARE PROVIDED PRIOR TO SURFACE TREATMENTS UNLESS NOTED.

INFORMATION SHOWN ON THIS DRAWING IS PROPRIETARY AND THE SOLE PROPERTY OF PHPK AND IS NOT TO BE DISCLOSED OR TRANSMITTED TO UNAUTHORIZED PARTIES.

PHPK TECHNOLOGIES
2111 BUILDERS PLACE COLUMBUS, OHIO 43204

TITLE
YALE T962 CRYOSTAT
CHIMNEY WELDMENT

SIZE	DRAWING NO.	CHG.
B	07-2032-6503	N/C

SCALE 1=4 SHEET 3 OF 4

v3.10.15 76/156

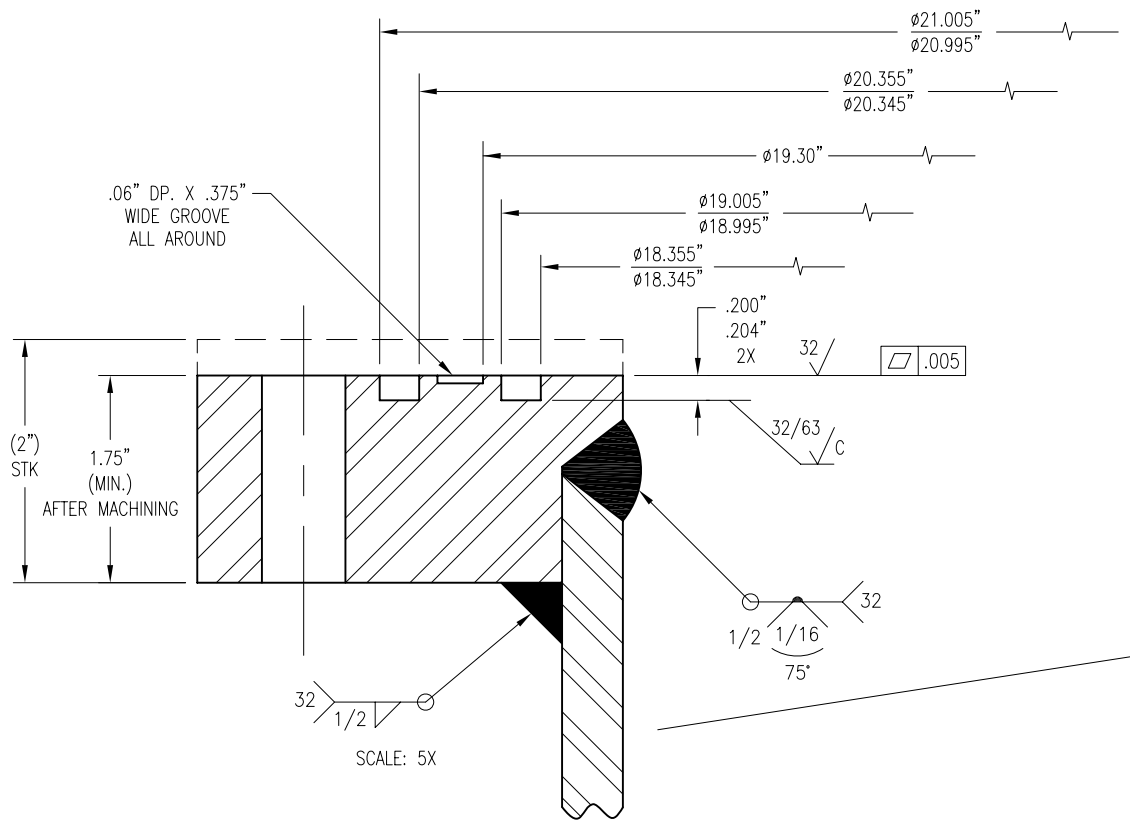

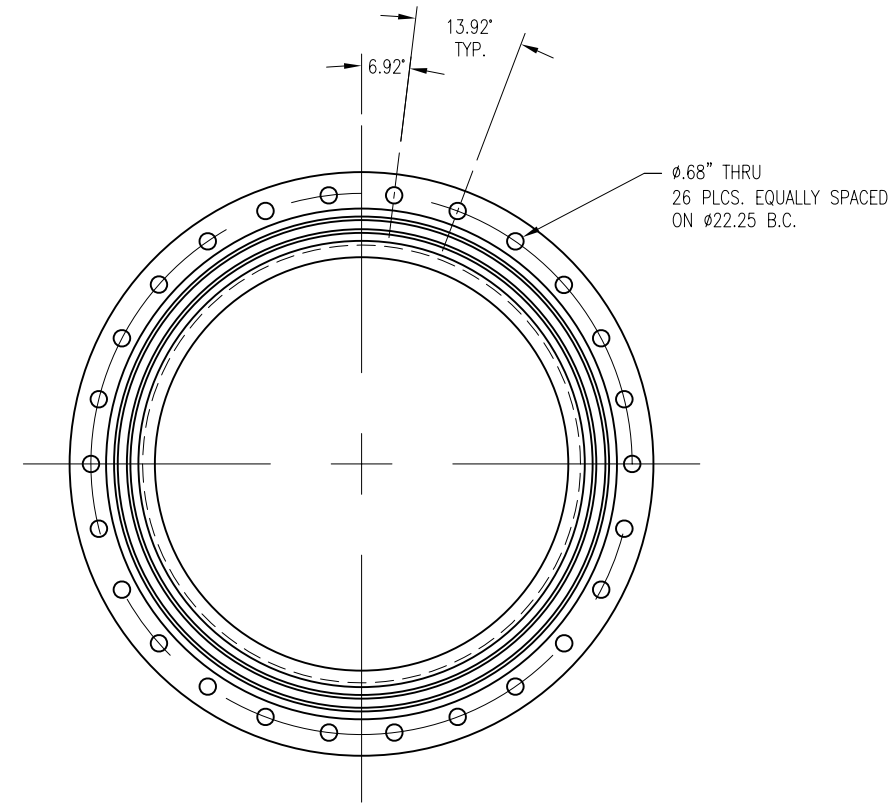

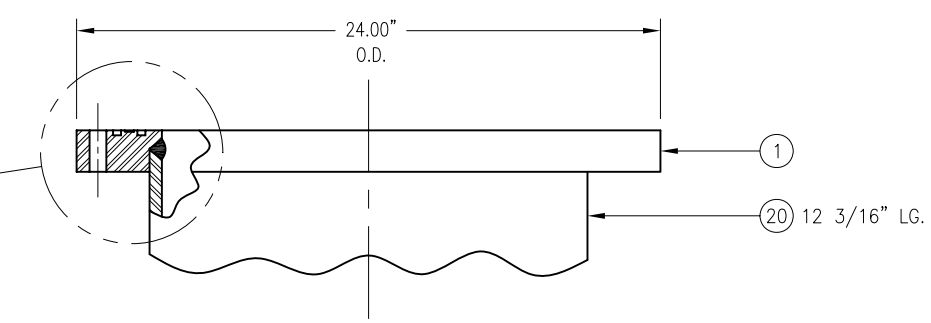

FLANGE WELDMENT (BODY)
& MACHINING DETAIL

(FROM SHT. 2)
ROTATED 22.5° C.C.W.

SEE 07-2032-BM-6503 FOR BILL OF MATERIALS.

REVISIONS

CHG.	DATE	EDR	DWN.	CH'KD.	APP'D.	REV'D.	DESCRIPTION
.	.	.	.	.	.	.	.

–	07-2032	·	07-2032-6503	1	07-2032-6500	B
WEIGHT	COST CENTER	CONTRACT NO.	PART NUMBER	NO. REQ'D	NEXT ASSEMBLY	SIZE

DRAWN	CD	TOLERANCES	
CHECKED	SW	FRACTION	±1/16"
ENGINEER	SW	.XX	±.01
		.XXX	±.005
REVIEWED		ANGULAR	±5°
REL. DATE	11-20-07		3356
			EDR

DIMENSIONS ARE PROVIDED PRIOR TO SURFACE TREATMENTS UNLESS NOTED.

INFORMATION SHOWN ON THIS DRAWING IS PROPRIETARY AND THE SOLE PROPERTY OF PHPK AND IS NOT TO BE DISCLOSED OR TRANSMITTED TO UNAUTHORIZED PARTIES.

PHPK TECHNOLOGIES
2111 BUILDERS PLACE COLUMBUS, OHIO 43204

TITLE
YALE T962 CRYOSTAT
CHIMNEY WELDMENT

SIZE	DRAWING NO.	CHG.
B	07-2032-6503	N/C

SCALE 1=8

v3.10.15 77/156

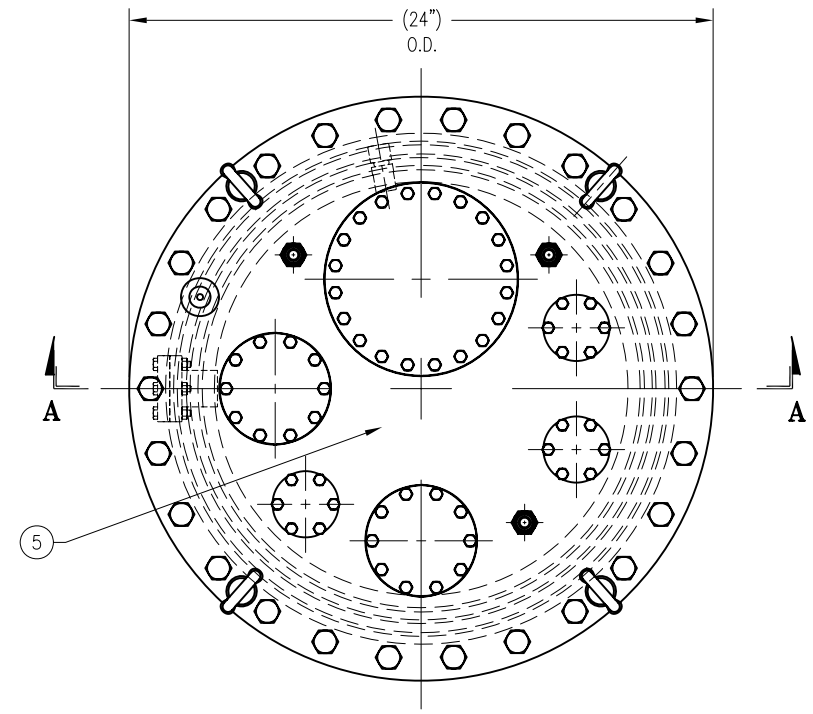

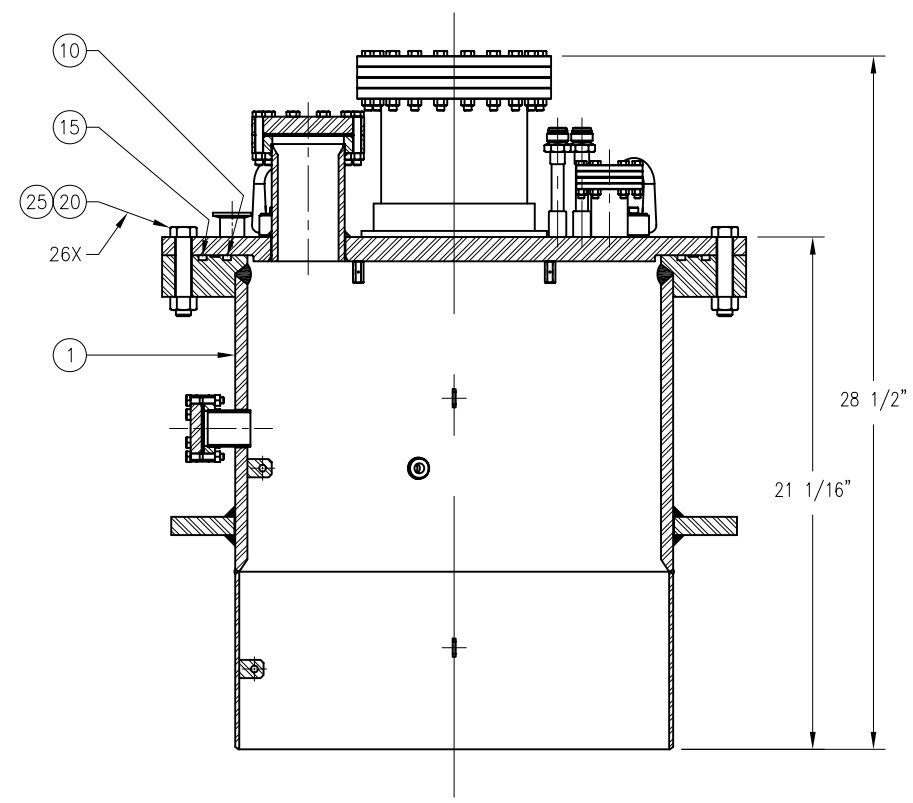

SECTION "A–A"

SEE 07–2032–BM–6504 FOR BILL OF MATERIALS.

REVISIONS

CHG.	DATE	EDR	DWN.	CH'KD.	APP'D.	REV'D.	DESCRIPTION
.	.	.	.	.	.	.	.

N/C	REV LETTER
1	SHEET NUMBER

INFORMATION SHOWN ON THIS DRAWING IS PROPRIETARY AND THE SOLE PROPERTY OF PHPK AND IS NOT TO BE DISCLOSED OR TRANSMITTED TO UNAUTHORIZED PARTIES.

–	07–2032	·	07–2032–6504	1	07–2032–6500	B
WEIGHT	COST CENTER	CONTRACT NO.	PART NUMBER	NO. REQ'D	NEXT ASSEMBLY	SIZE

		TOLERANCES	
DRAWN	CD	FRACTION	±1/16"
CHECKED	SW	.XX	±.01
ENGINEER	SW	.XXX	±.005
REVIEWED		ANGULAR	±5°
REL. DATE	12–3–07	3368	
		EDR	

DIMENSIONS ARE PROVIDED PRIOR TO SURFACE TREATMENTS UNLESS NOTED.

PHPK TECHNOLOGIES
2111 BUILDERS PLACE COLUMBUS, OHIO 43204

TITLE
YALE T962 CRYOSTAT
CHIMNEY ASSY

SIZE	DRAWING NO.	CHG.
B	07–2032–6504	N/C

SCALE 1=8 SHEET 1 OF 1

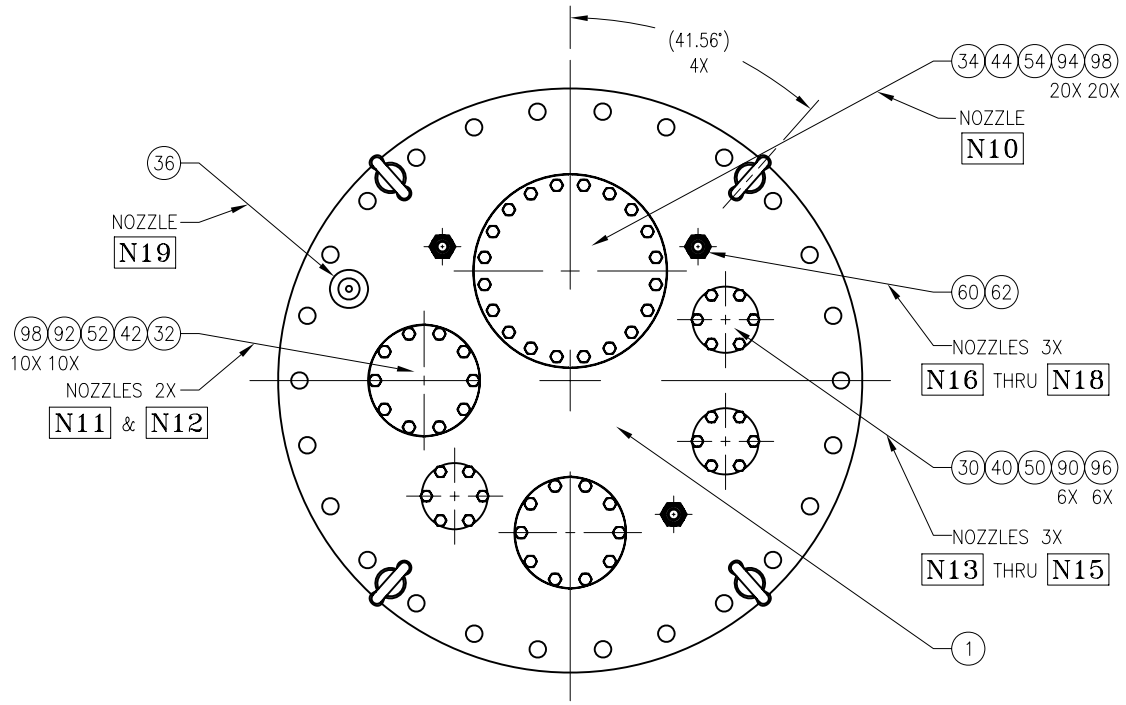

NOZZLE SCHEDULE

MARK	FLANGE SIZE / TYPE	PIPE / TUBE SIZE
N10	8" OD CF	6" NPS SCH 40
N11, N12	4 5/8" OD CF	3" OD X .25" WALL
N13, N14, N15	2 3/4" OD CF	1 1/2" OD X .19 WALL
N16, N17, N18	VCR, SWAGELOK FTG.	1/2" OD X .035" WALL
N19	KF25	1/2" OD TUBE, SWAGELOK FTG.

v3.10.15 78/156

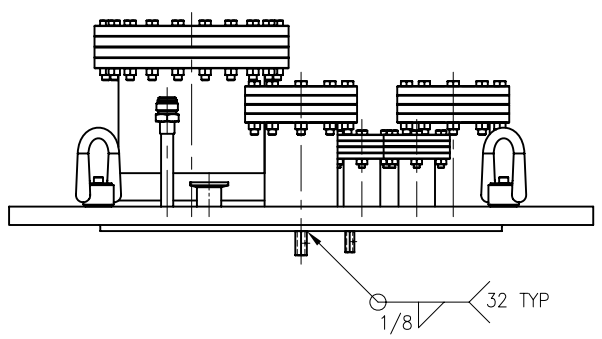

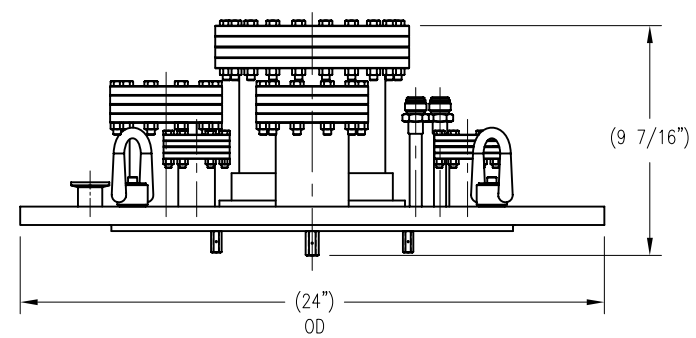

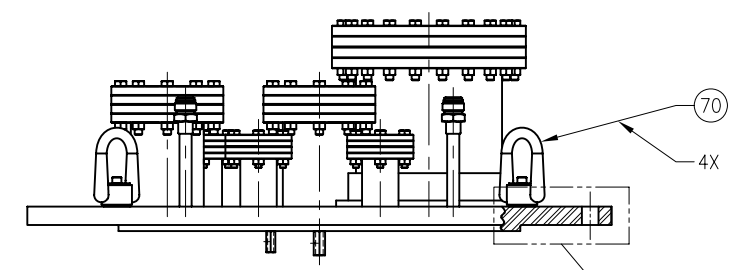

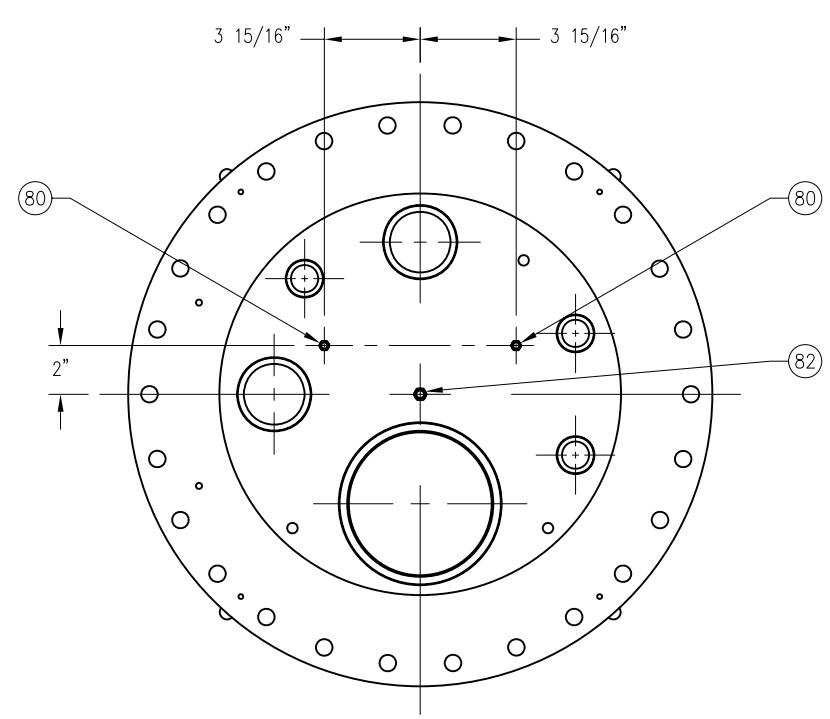

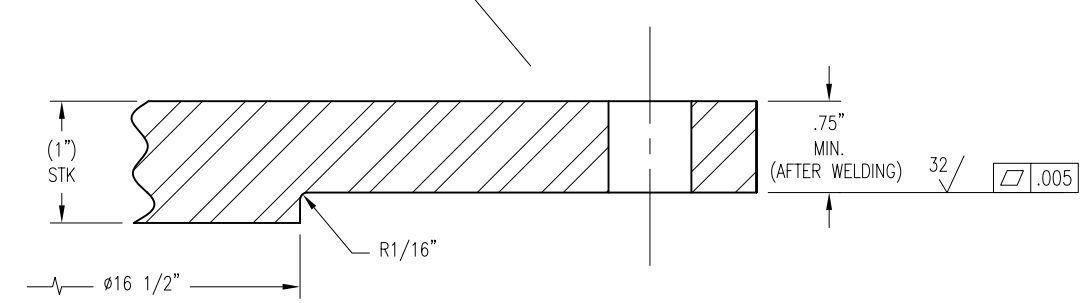

FINAL MACHINING–AFTER WELD

SCALE: 5X

SEE 07-2032-BM-6506 FOR BILL OF MATERIALS.

N/C	N/C	N/C	N/C	REV LETTER
4	3	2	1	SHEET NUMBER

INFORMATION SHOWN ON THIS DRAWING IS PROPRIETARY AND THE SOLE PROPERTY OF PHPK AND IS NOT TO BE DISCLOSED OR TRANSMITTED TO UNAUTHORIZED PARTIES.

–	07-2032	·	07-2032-6506	1	07-2032-6504	B
WEIGHT	COST CENTER	CONTRACT NO.	PART NUMBER	NO. REQ'D	NEXT ASSEMBLY	SIZE

DRAWN	CD	TOLERANCES	
CHECKED	SW	FRACTION	±1/16"
ENGINEER	SW	.XX	±.01
		.XXX	±.005
REVIEWED		ANGULAR	±5°
REL. DATE	12-3-07		3368
			EDR

DIMENSIONS ARE PROVIDED PRIOR TO SURFACE TREATMENTS UNLESS NOTED.

PHPK TECHNOLOGIES
2111 BUILDERS PLACE COLUMBUS, OHIO 43204

TITLE
YALE T962 CRYOSTAT
COVER PLATE ASSY

SIZE	DRAWING NO.	CHG.
B	07-2032-6506	N/C

SCALE 1=8 SHEET 1 OF 4

REVISIONS

CHG.	DATE	EDR	DWN.	CH'KD.	APP'D.	REV'D.	DESCRIPTION
·	·	·	·	·	·	·	·

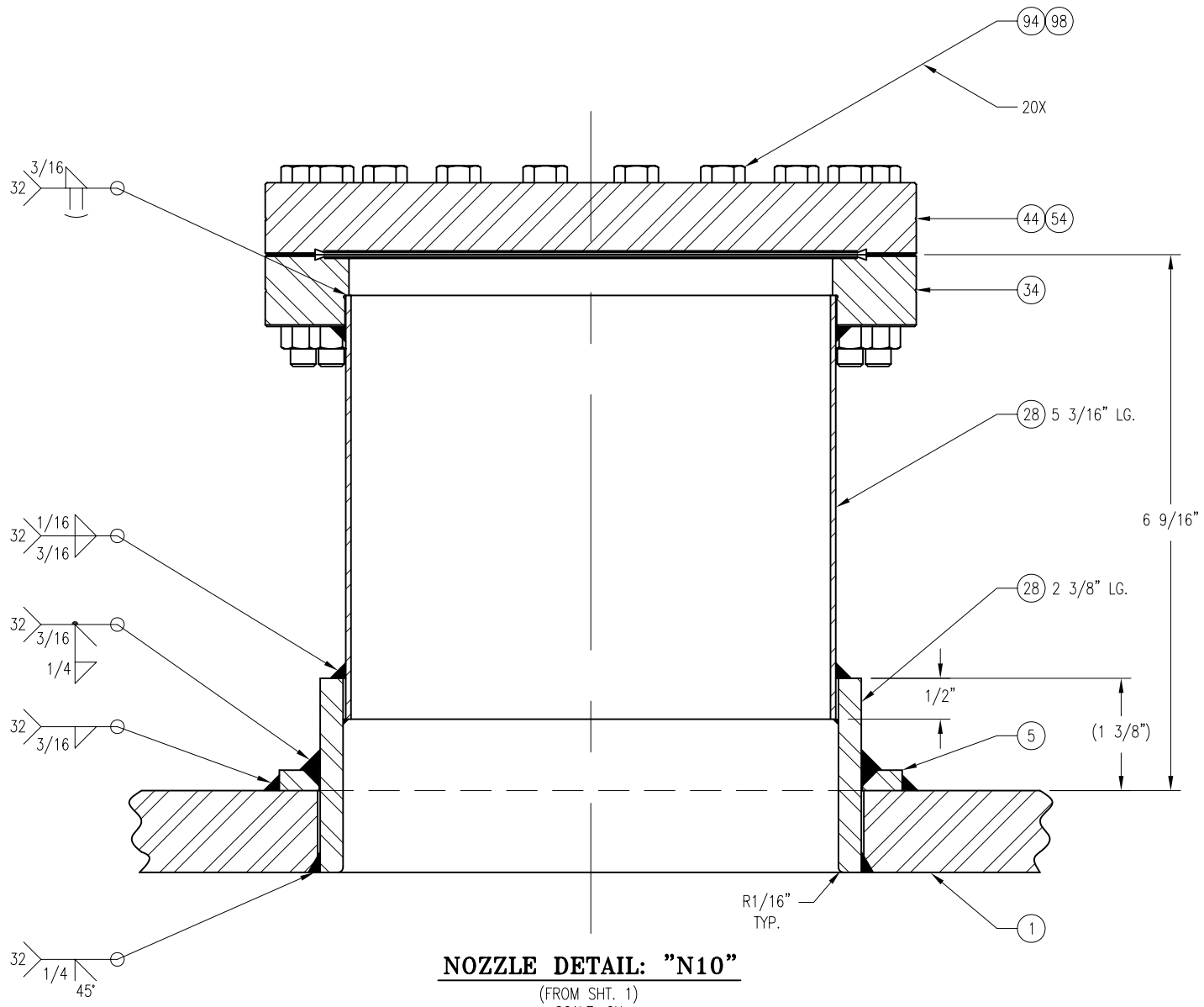

NOZZLE DETAIL: "N10"

(FROM SHT. 1)
SCALE: 2X

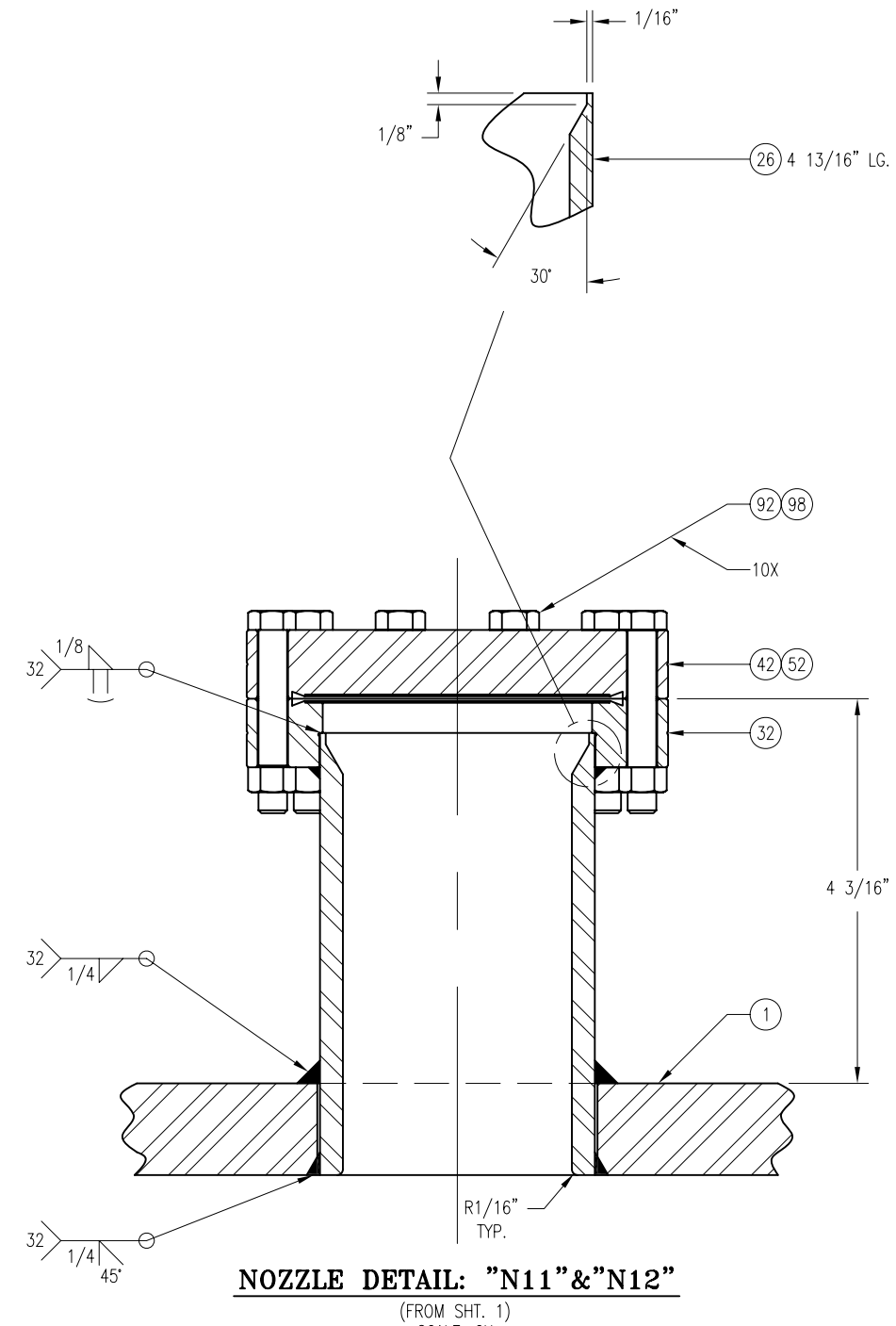

NOZZLE DETAIL: "N11"&"N12"

(FROM SHT. 1)
SCALE: 2X

SEE 07-2032-BM-6506 FOR BILL OF MATERIALS.

REVISIONS							
CHG.	DATE	EDR	DWN.	CH'KD.	APP'D.	REV'D.	DESCRIPTION
.	.	.	.	.	.	.	.

–	07-2032	·	07-2032-6506	1	07-2032-6504	B
WEIGHT	COST CENTER	CONTRACT NO.	PART NUMBER	NO. REQ'D	NEXT ASSEMBLY	SIZE

DRAWN	CD	TOLERANCES	
CHECKED	SW	FRACTION	±1/16"
ENGINEER	SW	.XX	±.01
		.XXX	±.005
REVIEWED		ANGULAR	±5°
REL. DATE	12-3-07		3368
			EDR

DIMENSIONS ARE PROVIDED PRIOR TO SURFACE TREATMENTS UNLESS NOTED.

INFORMATION SHOWN ON THIS DRAWING IS PROPRIETARY AND THE SOLE PROPERTY OF PHPK AND IS NOT TO BE DISCLOSED OR TRANSMITTED TO UNAUTHORIZED PARTIES.

PHPK TECHNOLOGIES
2111 BUILDERS PLACE COLUMBUS, OHIO 43204

TITLE
YALE T962 CRYOSTAT
COVER PLATE ASSY

SIZE	DRAWING NO.	CHG.
B	07-2032-6506	N/C

SCALE 1=4 SHEET 2 OF 4

v3.10.15 79/156

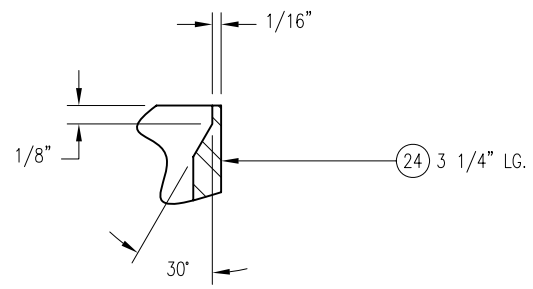

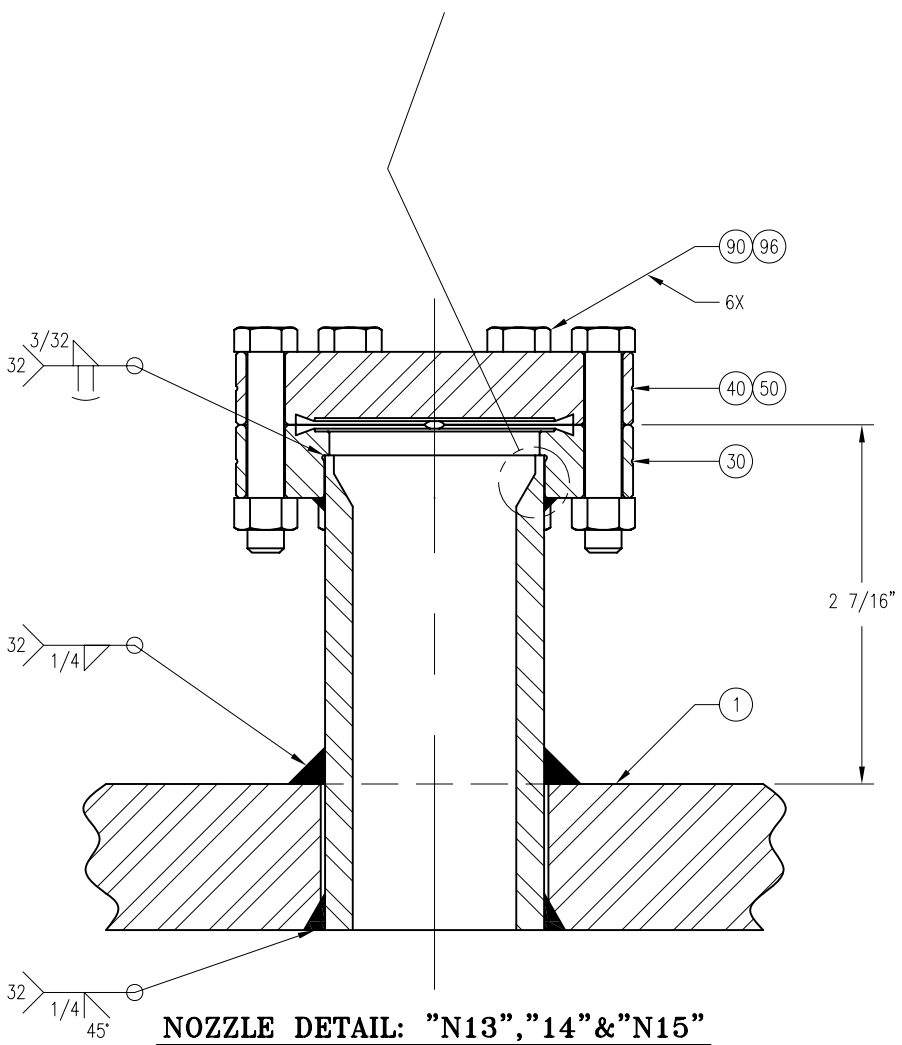

NOZZLE DETAIL: "N13","14"&"N15"

(FROM SHT. 1)
SCALE: 3X

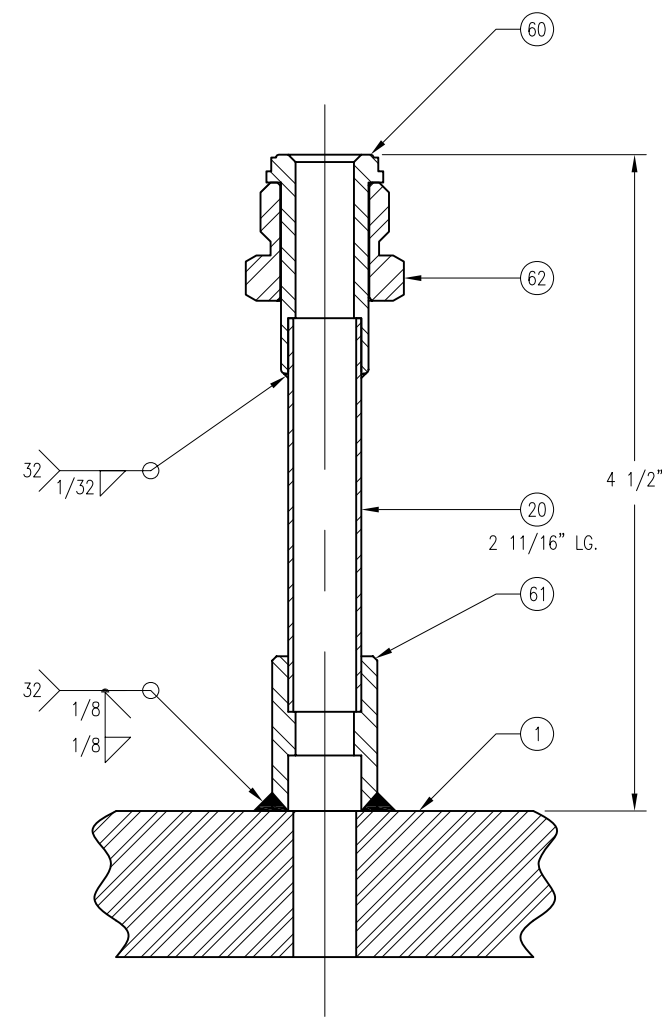

NOZZLE DETAIL: "N16","17"&"N18"

(FROM SHT. 1)
SCALE: 3X

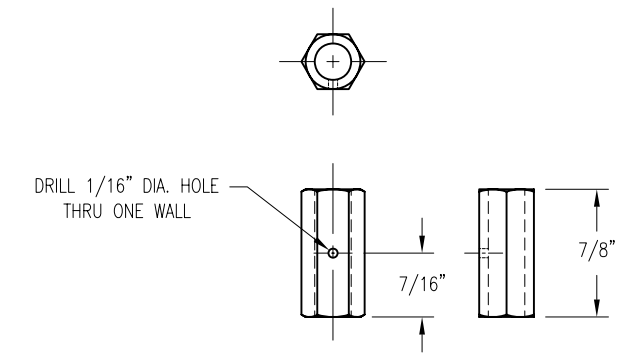

DETAIL, ITEM 80

2 REQ'D.
SCALE: 3X

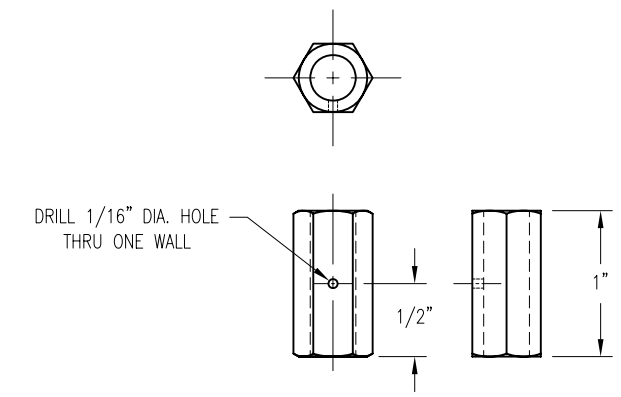

DETAIL, ITEM 82

1 REQ'D.
SCALE: 3X

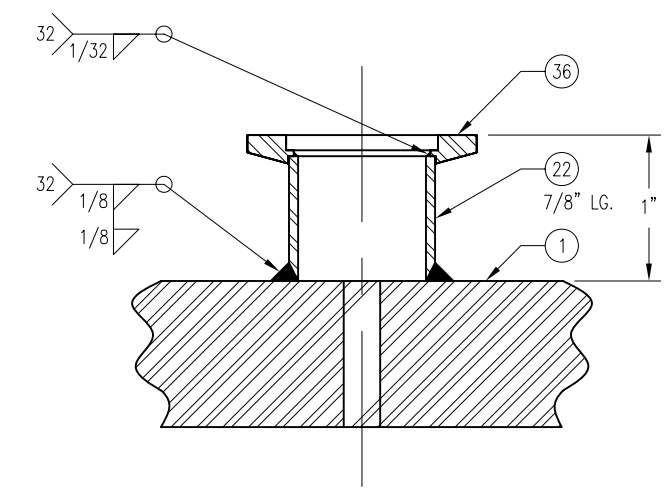

NOZZLE DETAIL: "N19"

(FROM SHT. 1)
SCALE: 3X

SEE 07-2032-BM-6506 FOR BILL OF MATERIALS.

REVISIONS							
CHG.	DATE	EDR	DWN.	CH'KD.	APP'D.	REV'D.	DESCRIPTION
.	.	.	.	.	.	.	.

–	07-2032	·	07-2032-6506	1	07-2032-6504	B
WEIGHT	COST CENTER	CONTRACT NO.	PART NUMBER	NO. REQ'D	NEXT ASSEMBLY	SIZE

DRAWN	CD	TOLERANCES	
CHECKED	SW	FRACTION	±1/16"
ENGINEER	SW	.XX	±.01
		.XXX	±.005
REVIEWED		ANGULAR	±5°
REL. DATE	12-3-07	3368	
		EDR	

DIMENSIONS ARE PROVIDED PRIOR TO SURFACE TREATMENTS UNLESS NOTED.

INFORMATION SHOWN ON THIS DRAWING IS PROPRIETARY AND THE SOLE PROPERTY OF PHPK AND IS NOT TO BE DISCLOSED OR TRANSMITTED TO UNAUTHORIZED PARTIES.

PHPK TECHNOLOGIES
2111 BUILDERS PLACE COLUMBUS, OHIO 43204

TITLE
YALE T962 CRYOSTAT
COVER PLATE ASSY

SIZE	DRAWING NO.	CHG.
B	07-2032-6506	N/C

SCALE 1=4 SHEET 3 OF 4

v3.10.15 80/156

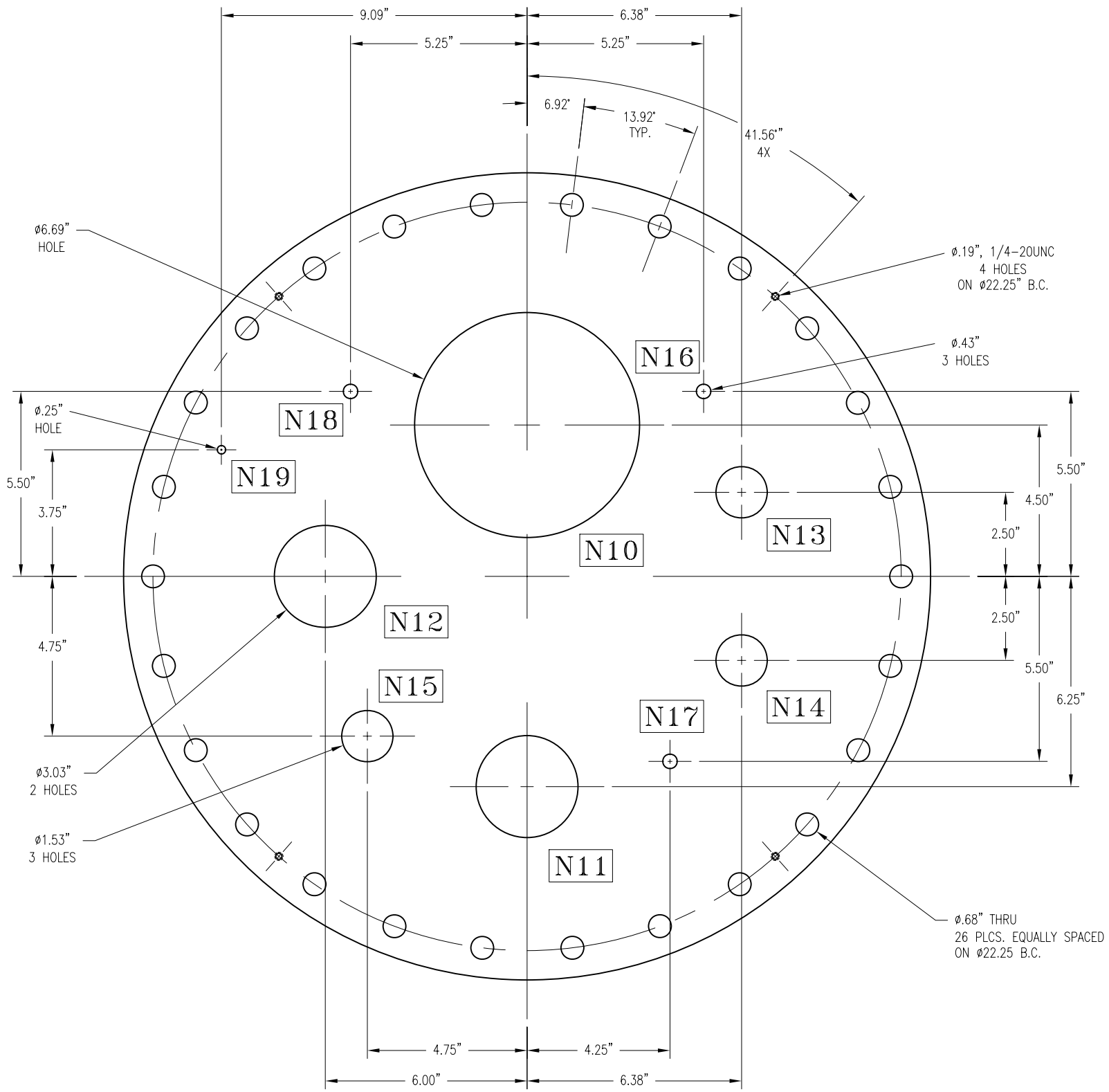

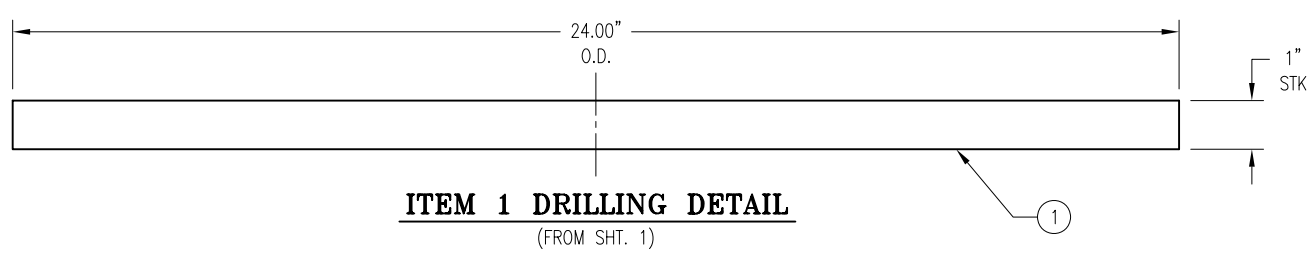

ITEM 1 DRILLING DETAIL

(FROM SHT. 1)

SEE 07-2032-BM-6506 FOR BILL OF MATERIALS.

REVISIONS

CHG.	DATE	EDR	DWN.	CH'KD.	APP'D.	REV'D.	DESCRIPTION
.	.	.	.	.	.	.	.

v3.10.15 81/156

–	07-2032	·	07-2032-6506	1	07-2032-6504	B
WEIGHT	COST CENTER	CONTRACT NO.	PART NUMBER	NO. REQ'D	NEXT ASSEMBLY	SIZE

DRAWN	CD	TOLERANCES	
CHECKED	SW	FRACTION	±1/16"
ENGINEER	SW	.XX	±.01
		.XXX	±.005
REVIEWED		ANGULAR	±5°
REL. DATE	12-3-07	3368	
		EDR	

DIMENSIONS ARE PROVIDED PRIOR TO SURFACE TREATMENTS UNLESS NOTED.

INFORMATION SHOWN ON THIS DRAWING IS PROPRIETARY AND THE SOLE PROPERTY OF PHPK AND IS NOT TO BE DISCLOSED OR TRANSMITTED TO UNAUTHORIZED PARTIES.

PHPK TECHNOLOGIES
2111 BUILDERS PLACE COLUMBUS, OHIO 43204

TITLE
YALE T962 CRYOSTAT
INNER VESSEL WELDMENT

SIZE	DRAWING NO.	CHG.
B	07-2032-6506	N/C

SCALE 1=4 SHEET 4 OF 4

v3.10.15 82/156

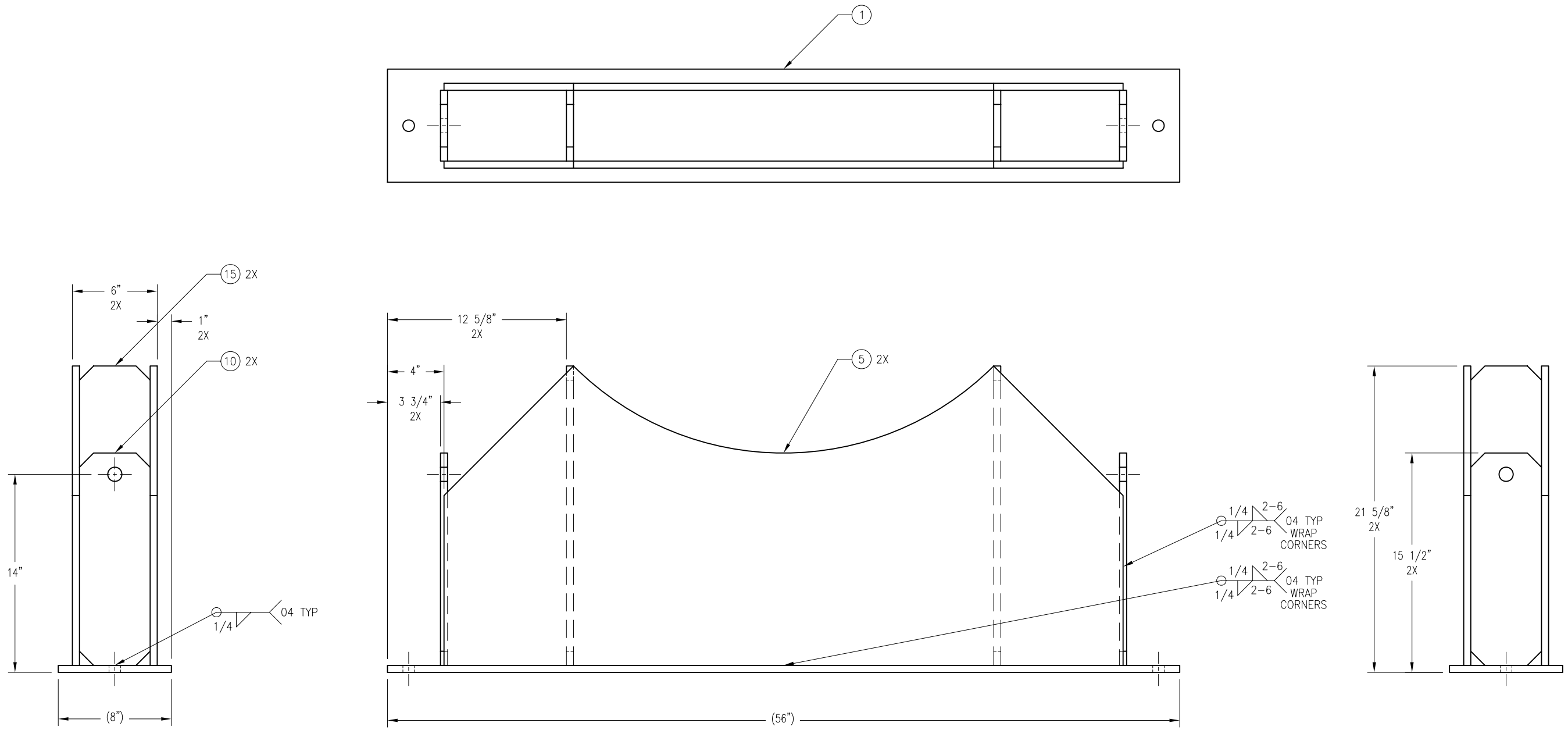

SEE 07-2032-BM-6507 FOR BILL OF MATERIALS.

CHG.	DATE	EDR	DWN.	CH'KD.	APP'D.	REV'D.	DESCRIPTION
.	.	.	.	.	.	.	.

REVISIONS

N/C	N/C	REV LETTER
2	1	SHEET NUMBER

INFORMATION SHOWN ON THIS DRAWING IS PROPRIETARY AND THE SOLE PROPERTY OF PHPK AND IS NOT TO BE DISCLOSED OR TRANSMITTED TO UNAUTHORIZED PARTIES.

WEIGHT	COST CENTER	CONTRACT NO.	PART NUMBER	NO. REQ'D	NEXT ASSEMBLY	SIZE
–	07-2032	·	07-2032-6507	2	07-2032-6500	B

DRAWN	CD	TOLERANCES	
CHECKED	SW	FRACTION	±1/16"
ENGINEER	SW	.XX	±.01
		.XXX	±.005
REVIEWED		ANGULAR	±5°
REL. DATE	11-20-07		3356
			EDR

DIMENSIONS ARE PROVIDED PRIOR TO SURFACE TREATMENTS UNLESS NOTED.

PHPK TECHNOLOGIES
2111 BUILDERS PLACE COLUMBUS, OHIO 43204

TITLE
YALE T962 CRYOSTAT
SADDLE ASSY

SIZE	DRAWING NO.	CHG.
B	07-2032-6507	N/C

SCALE 1=8 SHEET 1 OF 2

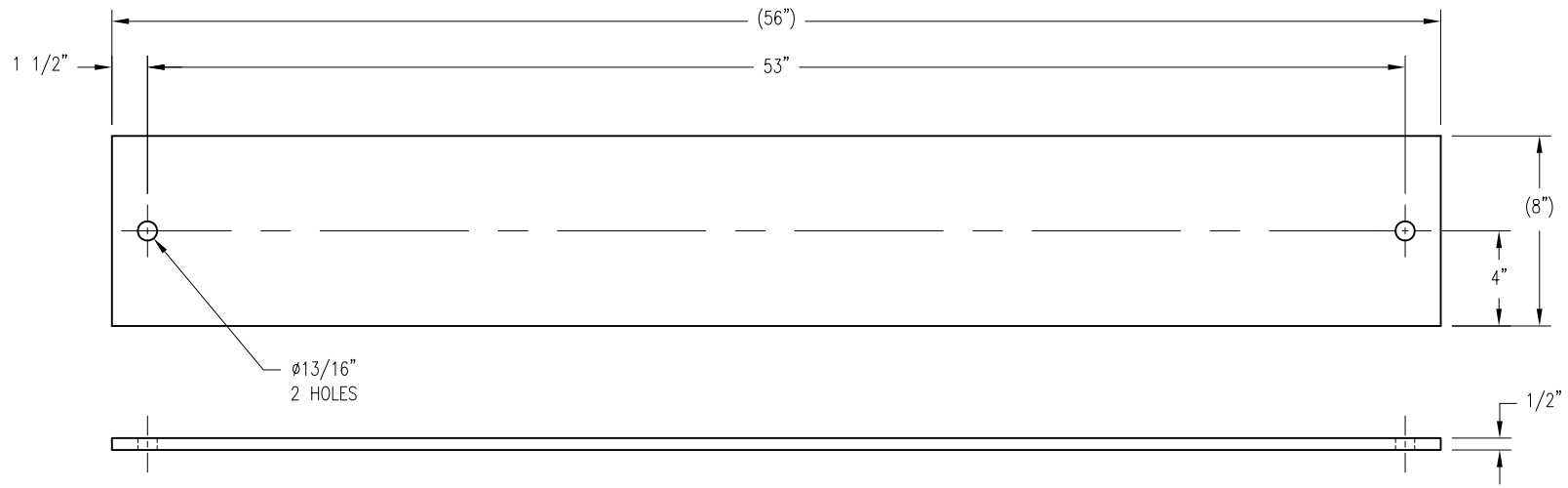

DETAIL, ITEM 1
2 REQ'D.

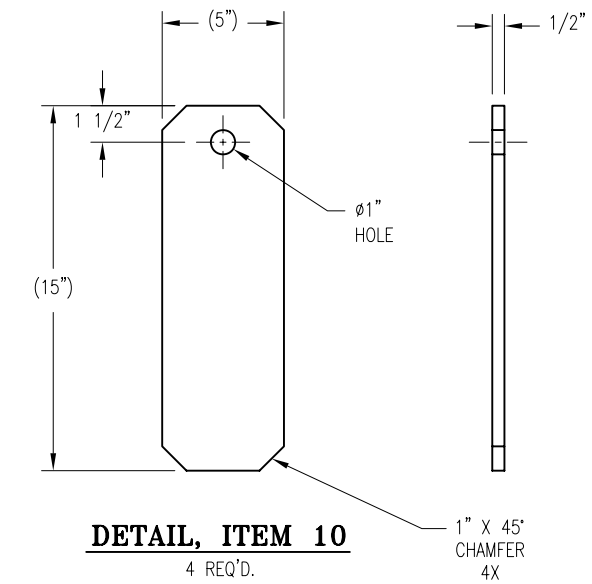

DETAIL, ITEM 10
4 REQ'D.

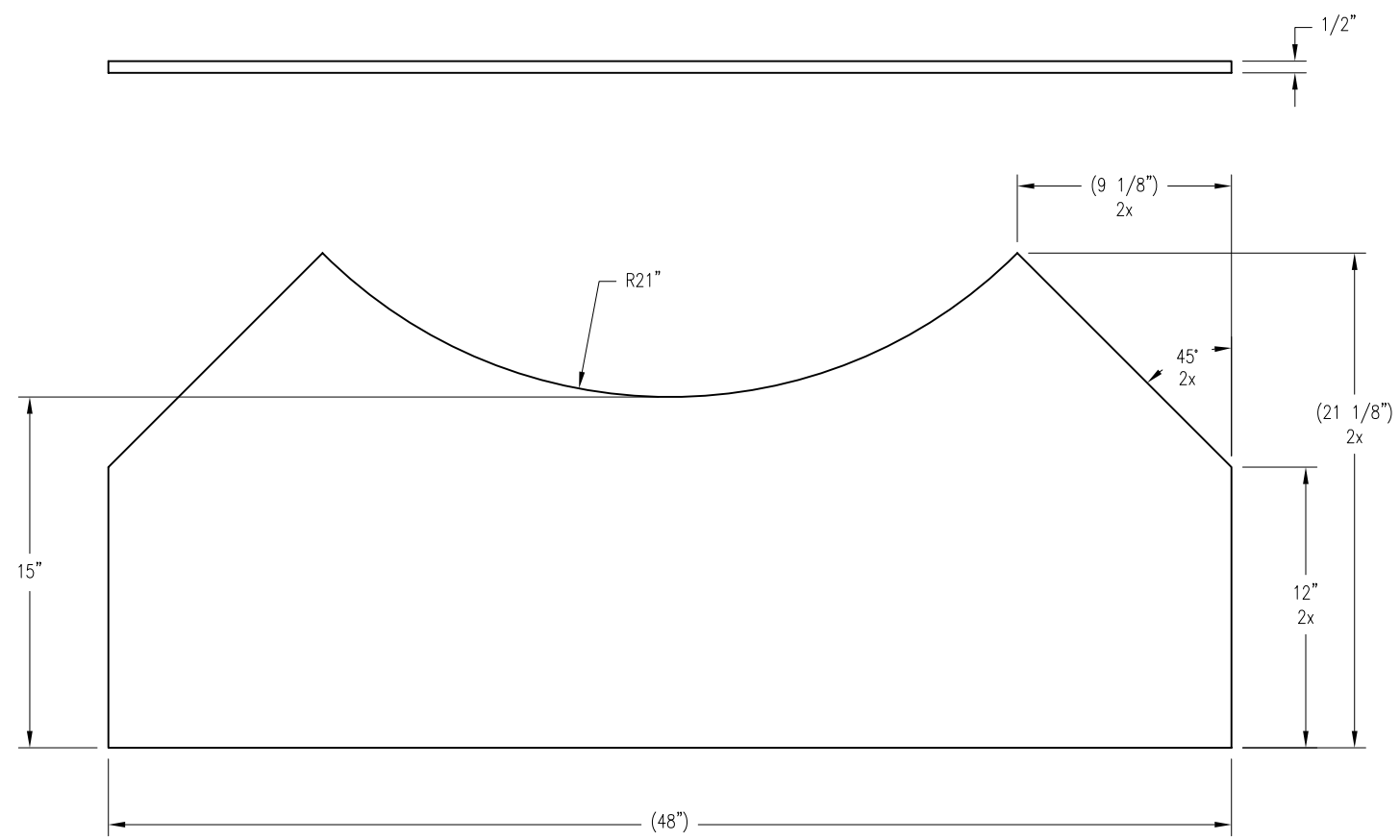

DETAIL, ITEM 5
4 REQ'D.

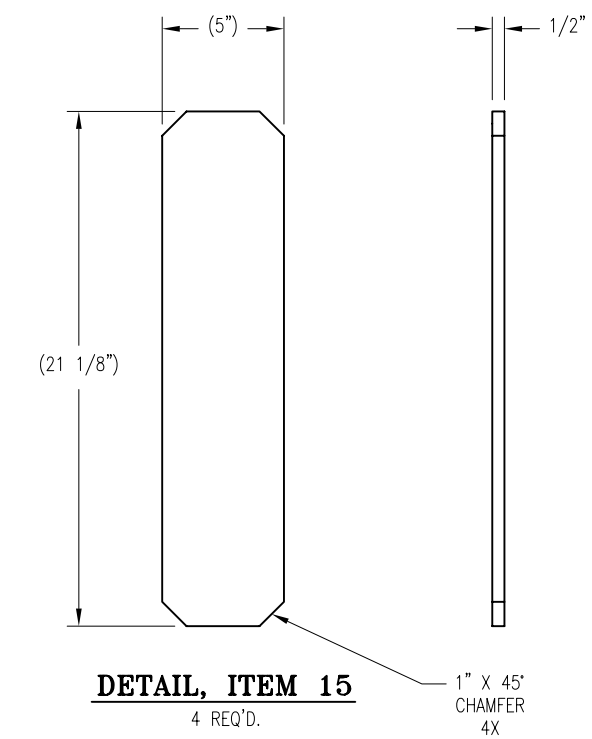

DETAIL, ITEM 15
4 REQ'D.

v3.10.15 83/156

REVISIONS

CHG.	DATE	EDR	DWN.	CH'KD.	APP'D.	REV'D.	DESCRIPTION
.	.	.	.	.	.	.	.

SEE 07-2032-BM-6507 FOR BILL OF MATERIALS.

INFORMATION SHOWN ON THIS DRAWING IS PROPRIETARY AND THE SOLE PROPERTY OF PHPK AND IS NOT TO BE DISCLOSED OR TRANSMITTED TO UNAUTHORIZED PARTIES.

–	07-2032	·	07-2032-6507	2	07-2032-6500	B
WEIGHT	COST CENTER	CONTRACT NO.	PART NUMBER	NO. REQ'D	NEXT ASSEMBLY	SIZE

		TOLERANCES	
DRAWN	CD	FRACTION	±1/16"
CHECKED	SW	.XX	±.01
ENGINEER	SW	.XXX	±.005
REVIEWED		ANGULAR	±5°
REL. DATE	11-20-07	3356	
		EDR	

DIMENSIONS ARE PROVIDED PRIOR TO SURFACE TREATMENTS UNLESS NOTED.

PHPK TECHNOLOGIES
2111 BUILDERS PLACE COLUMBUS, OHIO 43204

TITLE
YALE T962 CRYOSTAT
SADDLE ASSY

SIZE	DRAWING NO.	CHG.
B	07-2032-6507	N/C

SCALE 1=8 SHEET 2 OF 2

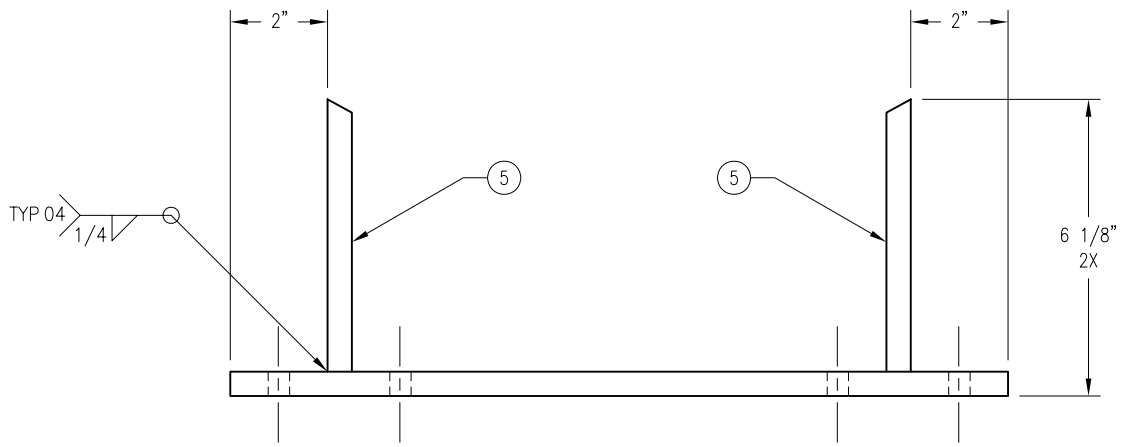

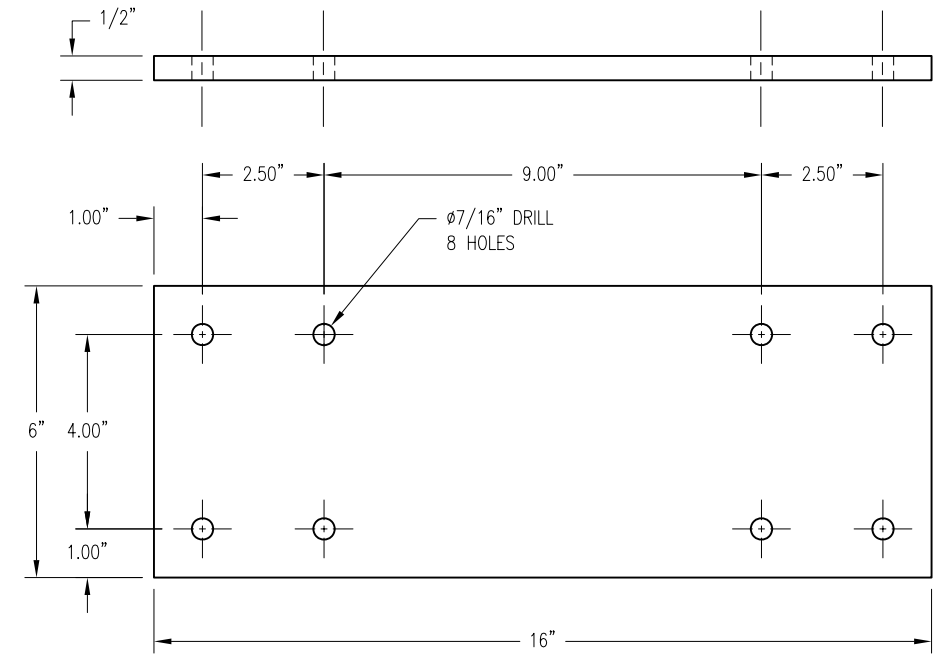

DETAIL, ITEM 1

3 REQ'D.

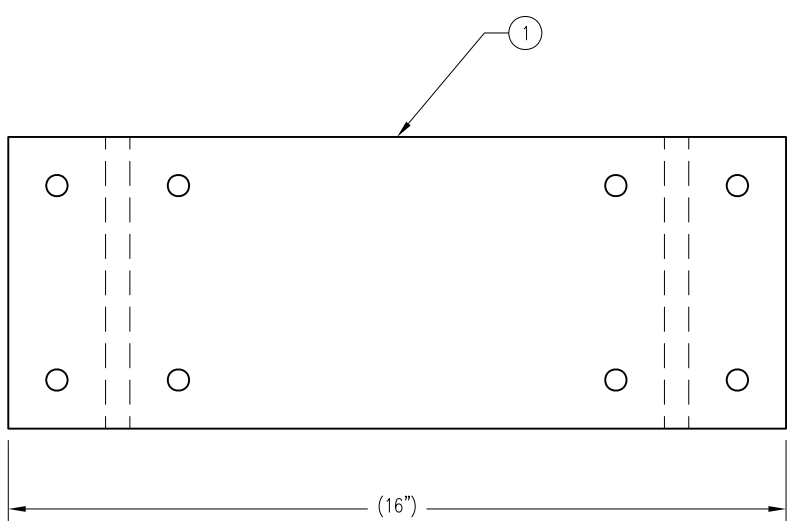

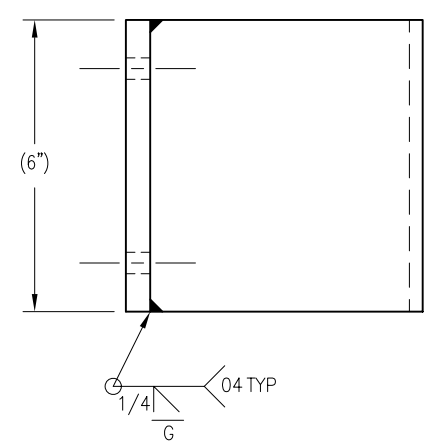

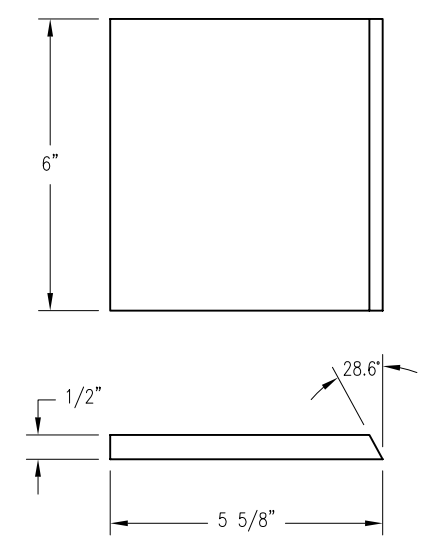

DETAIL, ITEM 5

6 REQ'D.

SEE 07-2032-BM-6511 FOR BILL OF MATERIALS.

REVISIONS

CHG.	DATE	EDR	DWN.	CH'KD.	APP'D.	REV'D.	DESCRIPTION
.	.	.	.	.	.	.	.

v3.10.15 84/156

–	07-2032	·	07-2032-6511	3	07-2032-6500	B
WEIGHT	COST CENTER	CONTRACT NO.	PART NUMBER	NO. REQ'D	NEXT ASSEMBLY	SIZE

DRAWN	CD	TOLERANCES	
CHECKED	SW	FRACTION	±1/16"
ENGINEER	SW	.XX	±.01
		.XXX	±.005
REVIEWED		ANGULAR	±5°
REL. DATE	11-20-07	3356	
		EDR	

DIMENSIONS ARE PROVIDED PRIOR TO SURFACE TREATMENTS UNLESS NOTED.

INFORMATION SHOWN ON THIS DRAWING IS PROPRIETARY AND THE SOLE PROPERTY OF PHPK AND IS NOT TO BE DISCLOSED OR TRANSMITTED TO UNAUTHORIZED PARTIES.

PHPK TECHNOLOGIES
2111 BUILDERS PLACE COLUMBUS, OHIO 43204

TITLE
YALE T962 CRYOSTAT
SUPPORT ASSY

SIZE	DRAWING NO.	CHG.
B	07-2032-6511	N/C

SCALE 1=4 SHEET 1 OF 1

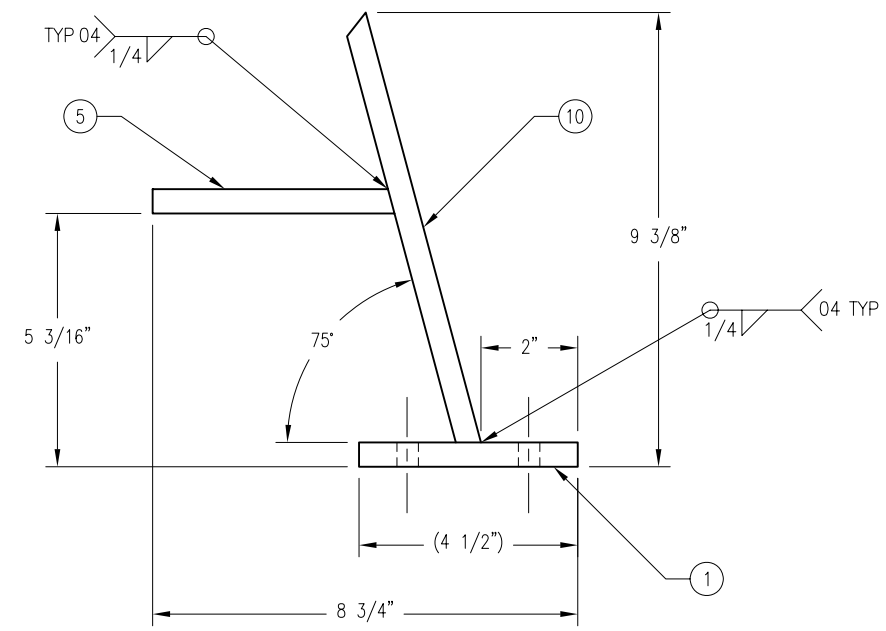

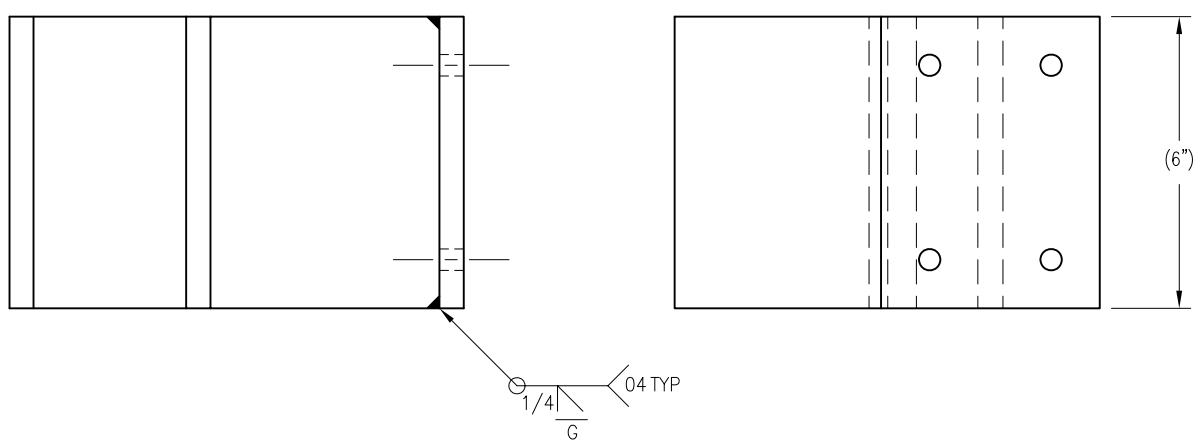

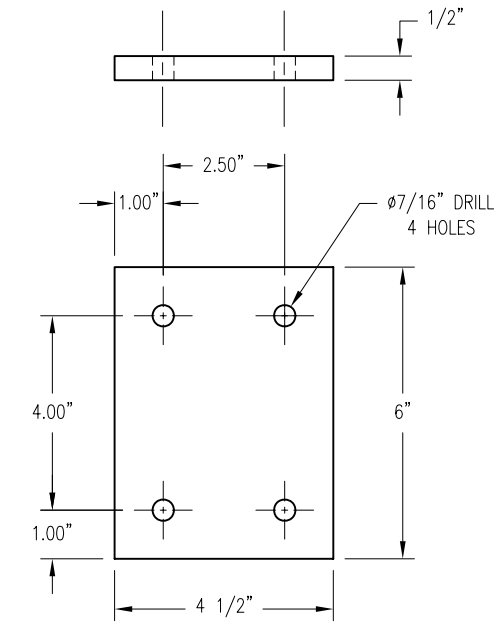

DETAIL, ITEM 1
2 REQ'D.

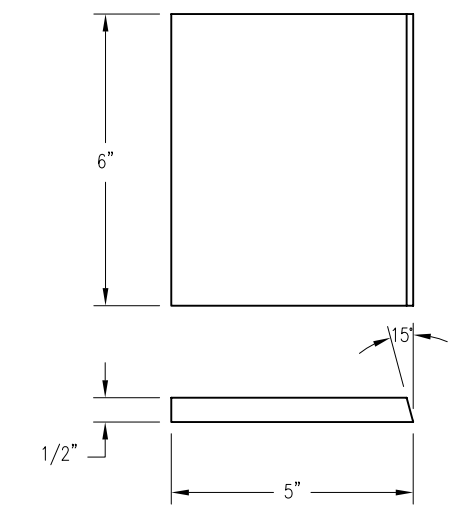

DETAIL, ITEM 5
2 REQ'D.

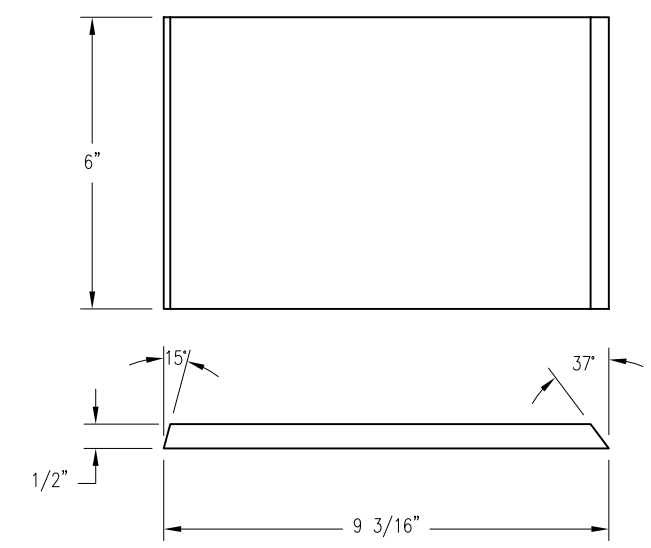

DETAIL, ITEM 10
2 REQ'D.

v3.10.15 85/156

REVISIONS

CHG.	DATE	EDR	DWN.	CH'KD.	APP'D.	REV'D.	DESCRIPTION
.	.	.	.	.	.	.	.

SEE 07-2032-BM-6512 FOR BILL OF MATERIALS.

–	07-2032	·	07-2032-6512	2	07-2032-6500	B
WEIGHT	COST CENTER	CONTRACT NO.	PART NUMBER	NO. REQ'D	NEXT ASSEMBLY	SIZE

		TOLERANCES	
DRAWN	CD		
CHECKED	SW	FRACTION	±1/16"
ENGINEER	SW	.XX	±.01
		.XXX	±.005
REVIEWED		ANGULAR	±5°
REL. DATE	11-20-07		3356
			EDR

DIMENSIONS ARE PROVIDED PRIOR TO SURFACE TREATMENTS UNLESS NOTED.

INFORMATION SHOWN ON THIS DRAWING IS PROPRIETARY AND THE SOLE PROPERTY OF PHPK AND IS NOT TO BE DISCLOSED OR TRANSMITTED TO UNAUTHORIZED PARTIES.

PHPK TECHNOLOGIES
2111 BUILDERS PLACE COLUMBUS, OHIO 43204

TITLE
YALE T962 CRYOSTAT
SUPPORT ASSY

SIZE	DRAWING NO.	CHG.
B	07-2032-6512	N/C

SCALE 1=4 SHEET 1 OF 1

	NAME	DATE
PREPARED	CD	12-10-07
CHECKED	SW	12-10-07
ENGINEER	SW	12-10-07
REVIEWED		
WORK ORDER NO.	07	2032
CONTRACT NO.		

PHPK Technologies

2111 BUILDERS PLACE - COLUMBUS, OH 43204

ORIGINAL RELEASE DATE

12-10-07

DRAWING TITLE

YALE T962 CRYOSTAT FINAL ASSY

DRAWING NO:

07-2032-BM-6500

REVISION LETTER:	N/C
PART NUMBER	07-2032-6500
NO. REQUIRED	1
NEXT ASSEMBLY	

BILL OF MATERIAL

REVISION LTR-NOTE	QTY.	UNITS	COST CODE	ITEM NUMBER	PART NUMBER	DESCRIPTION	MATERIAL	PURCH NOTES
	1	EA		1	07-2032-6501	INNER VESSEL WELDMENT		
	1	EA		2	07-2032-6502	OUTER VESSEL WELDMENT		
	1	EA		3	07-2032-6504	CHIMNEY ASSY		
	2	EA		4	07-2032-6507	SADDLE ASSY		
	3	EA		5	07-2032-6511	SUPPORT ASSY		
	2	EA		6	07-2032-6512	SUPPORT ASSY		
	1	EA		10	COM'L	PLATE CIRCLE - 3/8" THK X 6.62" OD	ASME SA240 304	7
	1	EA		20	COM'L	PLATE, .190" THK X 26 1/4" LG. ROLLED TO 21" INS RAD.	ASME SA240 304	5, 7, 8
	1	EA		30	07-07-0086	PIPE, 4" NPS SCH 40 (.237" WALL) WELDED X 3" LG.	ASME SA312 TP304	7
	1	EA		32	07-07-0088	PIPE, 6" NPS SCH 40 (.280" WALL) WELDED X 3" LG.	ASME SA312 TP304	3, 7
	1	EA		34	07-06-0096	PIPE, 24" NPS STD WT (.375" WALL) WELDED X 13 3/16" LG.	ASME SA312 TP304	2, 7
	1	EA		40	07-00-0019	TUBE, 1" OD X .065" WALL X 7/8" LG. SEAMLESS	ASME SA269 304L	
	2	EA		42	COM'L	TUBE, 1 3/4" OD X 3/8" WALL X 3 3/4" LG.	G-10	1, 6
	1	EA		44	COM'L	TUBE, 4" OD X .25" WALL X 8" LG.	G-10	4, 6
	1	EA		50	COM'L	FLANGE, QF25 X 1" - KJ LESKER P/N QF25-100-SBB	304L SST	
	3	EA		52	COM'L	FLANGE, BLANK, QF25 X 1" - KJ LESKER P/N QF25-100-SB	304L SST	
	2	EA		54	COM'L	FLANGE, BLANK, QF50 X 2" - KJ LESKER P/N QF50-200-SB	304L SST	
	3	EA		60	COM'L	CENTERING RING, 1" - KJ LESKER P/N QF25-100-SRV	SST/VITON	
	2	EA		62	COM'L	CENTERING RING, 2" - KJ LESKER P/N QF50-200-SRV	SST/VITON	
	3	EA		70	COM'L	CLAMP, 1" - KJ LESKER P/N QF25-100-MC	MACHINED ALUMINUM	
	2	EA		72	COM'L	CLAMP, 2" - KJ LESKER P/N QF50-200-MC	MACHINED ALUMINUM	

PURCHASING NOTES:

1 THIS ITEM HAVE BEEN PREVIOUSLY PROCURED ON 07-2032-BM-6501 AS ITEM #40, CHANGED LENGTH FROM 5 3/4" LG. TO 3 3/4" LG.

2 THIS ITEM HAVE BEEN PREVIOUSLY PROCURED ON 07-2032-BM-6502 AS ITEM #30, CHANGED LENGTH FROM 16" LG. TO 13 3/16" LG.

3 THIS ITEM HAVE BEEN PREVIOUSLY PROCURED ON 07-2032-BM-6502 AS ITEM #40.

4 THIS ITEM HAVE BEEN PREVIOUSLY PROCURED ON 07-2032-BM-6502 AS ITEM #45.

5 THIS ITEM HAVE BEEN PREVIOUSLY PROCURED ON 07-2032-BM-6502 AS ITEM #50.

6 THIS MATERIAL IS IN PHPK RESIDUAL STOCK.

7 CERTIFIED MATERIAL TEST REPORTS INCLUDING PHYSICAL AND CHEMICAL ANALYSIS ARE REQUIRED WITH THIS MATERIAL.

8 SEE SKETCH 07-2032-6502-50.

REVISIONS

CHANGE	DATE	DWN	CHK	EDR	DESCRIPTION
N/C					1) ADDED ITEM 2) REVISED QUANTITY 3) REVISED DESCRIPTION 4) DELETED ITEM

	NAME	DATE
PREPARED	SW	10-05-07
CHECKED	KAK	10-05-07
ENGINEER	SW	10-05-07
REVIEWED		
WORK ORDER NO.	07	2032
CONTRACT NO.		

PHPK Technologies

2111 BUILDERS PLACE - COLUMBUS, OH 43204

ORIGINAL RELEASE DATE

10-05-07

DRAWING TITLE

YALE T962 CRYOSTAT INNER VESSEL WELDMENT

DRAWING NO:

07-2032-BM-6501

REVISION LETTER: **C**

PART NUMBER

NO. REQUIRED

NEXT ASSEMBLY

BILL OF MATERIAL

REVISION LTR-NOTE	QTY.	UNITS	COST CODE	ITEM NUMBER	PART NUMBER	DESCRIPTION	MATERIAL	PURCH NOTES
	1	EA		1	COM'L	HEAD, ASME F&D - 3/16" NOM THK (.12" MIN) X 30" OD WITH 1 1/2" SF, WELD PREP I.D. @ 37 1/2° WITH NO LAND (SHARP EDGE)	ASME SA240 304	1, 7
	1	EA		5	COM'L	HEAD, ASME F&D - 3/16" NOM THK (.12" MIN) X 30" OD WITH 1 1/2" SF, WELD PREP O.D. @ 37 1/2° WITH 1/32" LAND	ASME SA240 304	1, 7
	1	EA		10	COM'L	CYLINDER - 3/16" THK X 34 11/16" LONG X 30" OD BEVEL ONE END ON I.D. @ 37 1/2° WITH NO LAND (SHARP EDGE) BEVEL ONE END ON O.D. @ 37 1/2° WITH 1/32" LAND	ASME SA240 304	2, 7
A2, B5	1	EA		15	COM'L	PLATE RING - 2 3/4" THK X 29.62" ID X 36.00" OD	ASME SA182 F304	3, 7
A1, B5	1	EA		16	COM'L	PLATE RING - 2 1/2" THK X 29.62" ID X 36.00" OD	ASME SA182 F304	3, 7
	1	EA		20	COM'L	PLATE RING - 1 1/4" THK X 6.17" ID X 11.25" OD	ASME SA240 304	4, 7
	1	EA		25	COM'L	PLATE CIRCLE - 3/4" THK X 11.25" OD	ASME SA240 304	5, 7
B1	1	EA		26	COM'L	PLATE CIRCLE - 1/2" THK X 19.00" OD	ASME SA240 304	9
B3, B5	1	EA		30	COM'L	CYLINDER, 18" OD X .165" WALL X 11" LG	ASME SA240 304	2, 7
	1	EA		35	COM'L	PIPE, 6" NPS SCH 40 (.280" WALL) WELDED X 20" LG	ASME SA312 TP304	7
B1	1	EA		37	07-07-0086	PIPE, 4" NPS SCH 40 (.237" WALL) WELDED X 3" LG.	ASME SA312 TP304	
B1	2	EA		38	07-00-0081	PIPE, 1 1/2" NPS SCH 5 (.065" WALL) WELDED X 3" LG.	ASME SA312 TP304	
B4				40				
B1	6	FT		42	07-00-0014	TUBE, 1/2" OD X .049" WALL SEAMLESS	ASME SA269 304L	
B1	3	FT		43	40-0000-61049	TUBE, 1/4" OD X .035" WALL SEAMLESS	ASME SA269 304L	
B1	2	EA		44	COM'L	PLATE, 1/8" THK X 3/4" X 1"	ASME SA240 304	
B1	1	EA		45	07-00-0014	TUBE, 1/2" OD X .049" WALL X 12 7/16" LG. SEAMLESS	ASME SA269 304L	
B1	1	EA		46	COM'L	BAR, FLAT - 3/4" THK X 1" X 17 15/16" LG.	ASME SA240 304	7
B1	2	EA		47	COM'L	BAR, RD - 1/4" OD X 2 1/4" LG.	316 SST	
B1	1	EA		48	COM'L	BAR, FLAT - 3/4" THK X 1" X 18 11/16" LG.	ASME SA240 304	7
B1	1	EA		49	COM'L	BAR, FLAT - 3/4" THK X 1" X 37 5/8" LG.	ASME SA240 304	7
B1	1	EA		50	12-001-122	UNION TEE, SOCKET WELD, 1/2" TUBE, SWAGELOK P/N SS-8-TSW-3	316 SST	
B1	1	EA		51	12-001-123	UNION, SOCKET WELD, 1/2" TUBE, SWAGELOK P/N SS-8-TSW-6	316 SST	
B1	1	EA		53	12-001-048	UNION, SOCKET WELD, 1/4" TUBE, SWAGELOK P/N SS-4-TSW-6	316 SST	
A1	2	EA		60	COM'L	SEAL GARLOCK HELICOFLEX P/N H-310207		8
A1	2	EA		61	COM'L	SEAL GARLOCK HELICOFLEX P/N H-310208		8
A1	2	EA		63	COM'L	SEAL GARLOCK HELICOFLEX P/N H-310209		8
A1	2	EA		64	COM'L	SEAL GARLOCK HELICOFLEX P/N H-310210		8
A1	2	EA		65	COM'L	SEAL GARLOCK HELICOFLEX P/N H-310211		8
A1	2	EA		66	COM'L	SEAL GARLOCK HELICOFLEX P/N H-310212		8
B1	1	EA		80	70-001-050	BRACKET, ASME CODE NAMEPLATE	304 SST	
B1	1	EA		85	70-001-300	NAMEPLATE, ASME DIV 1 PRESSURE VESSEL	304 SST	
B1, C5	16	EA		89	COM'L	SCREW, HEX HD 1/2"-13UNC X 2 1/4" LG.	ASME SA320 GR B8	
B1, C5	32	EA		90	COM'L	SCREW, HEX HD 3/4"-10UNC X 5 3/4" LG.	ASME SA320 GR B8	
B1	16	EA		94	10-4100-00	NUT, HEX, 1/2"-13 UNC	ASME SA194 GR. 8	
B1	32	EA		95	10-4100-02	NUT, HEX, 3/4"-10 UNC	ASME SA194 GR. 8	

PURCHASING NOTES:

1 IF HEAD IS FABRICATED FROM MULTIPLE PLATES THEN 100% RADIOGRAPHICAL INSPECTION OF WELDS IS REQUIRED PER ASME CODE SECTION VIII, DIV.1, PART UW-51. HEAD WILL BE USED IN THE FABRICATION OF AN ASME SECTION VIII, DIV 1 PRESSURE VESSEL. FORMING TOLERANCES MUST ADHERE TO THE REQUIREMENTS OF ASME SECTION VIII, DIV 1, PART UG-79 AND 81. THICKNESS OF HEAD AS CALLED OUT IN BILL OF MATERIAL INCLUDES A MINIMUM OF 1/16" EXTRA MATERIAL FOR FORMING ALLOWANCES. DO NOT INCREASE HEAD THICKNESS WITHOUT NOTIFICATION TO PHPK PROJECT ENGINEER. INSIDE OF HEAD TO BE POLISHED TO #4 FINISH.

2 ROLLED CYLINDER WILL BE USED IN THE FABRICATION OF AN ASME SECTION VIII, DIV 1 PRESSURE VESSEL. FORMING TOLERANCES MUST ADHERE TO THE REQUIREMENTS OF ASME SECTION VIII, DIV 1, PART UG-80. IF LONGITUDINAL SEAM IS WELDED SUPPLIER MUST SUBMIT COMPLETED PARTIAL U1A DATA SHEETS. LONGITUDINAL SEAM SHALL BE TYPE 1C - RADIOGRAPHY NOT REQUIRED. IF LONGITUDINAL SEAM IS NOT WELDED THEN TACK WELDS MUST BE COMPLETELY REMOVED BY PHPK PRIOR TO FINAL WELDING. INSIDE OF CYLINDER TO BE POLISHED TO #4 FINISH.

3 IF RINGS ARE ORDERED PRE-MACHINED THEN SKETCH 07-2032-6501-15A AND 16 MUST ACCOMPANY QUOTE AND PO.
IF RINGS ARE ORDERED ROUGH CUT THEN SUPPLIER MUST ADD ENOUGH EXTRA MATERIAL TO ACHIEVE DIMENSION SHOWN ON SKETCH.
FINISHED THICKNESS IS 2.50" & 2.25" AFTER WELDING TO CYLINDER OR HEAD RESPECTIVELY.

4 IF RING IS ORDERED PRE-MACHINED THEN SKETCH 07-2032-6501-20 MUST ACCOMPANY QUOTE AND PO.
IF RING IS ORDERED ROUGH CUT THEN SUPPLIER MUST ADD ENOUGH EXTRA MATERIAL TO ACHIEVE DIMENSION SHOWN ON SKETCH.
FINISHED THICKNESS IS .88" AFTER WELDING TO NOZZLE.

5 FINISHED THICKNESS FOR THIS PLATE CIRCLE IS .50" AFTER FINAL MACHINING.

6

7 CERTIFIED MATERIAL TEST REPORTS INCLUDING PHYSICAL AND CHEMICAL ANALYSIS ARE REQUIRED WITH THIS MATERIAL.
IF MATERIAL IS PURCHASED AS A FORGING THEN MATERIAL WILL BE ASME SA182 F304

	NAME	DATE	PHPK Technologies	DRAWING NO:
PREPARED	SW	10-05-07		07-2032-BM-6501
CHECKED	KAK	10-05-07	2111 BUILDERS PLACE - COLUMBUS, OH 43204	
ENGINEER	SW	10-05-07	ORIGINAL RELEASE DATE	DRAWING TITLE / REVISION LETTER: C
REVIEWED			10-05-07	YALE T962 CRYOSTAT INNER VESSEL WELDMENT / PART NUMBER
WORK ORDER NO.	07	2032		NO. REQUIRED
CONTRACT NO.				NEXT ASSEMBLY

BILL OF MATERIAL

REVISION LTR-NOTE	QTY.	UNITS	COST CODE	ITEM NUMBER	PART NUMBER	DESCRIPTION	MATERIAL	PURCH NOTES
8	REFER TO GARLOCK HELICOFLEX QUOTATION No 101116.							
9	THIS PLATE IS USED FOR PRESSURE TESTING ONLY AND IS NOT PART OF THIS PRESSURE VESSEL.							

REVISIONS

CHANGE	DATE	DWN	CHK	EDR	DESCRIPTION
N/C	10-04-07	SW	KAK	3314	1) ADDED ITEM 2) REVISED QUANTITY 3) REVISED DESCRIPTION 4) DELETED ITEM
A	10-15-07	SW	KAK		1) ADDED ITEM 2) REVISED QUANTITY 3) REVISED DESCRIPTION 4) DELETED ITEM
B	10-31-07	CD	KAK	3340	1) ADDED ITEM 2) REVISED QUANTITY 3) REVISED DESCRIPTION 4) DELETED ITEM 5) REVISED MATERIAL
C	12-3-07	CD	SW	3368	1) ADDED ITEM 2) REVISED QUANTITY 3) REVISED DESCRIPTION 4) DELETED ITEM 5) REVISED MATERIAL

	NAME	DATE
PREPARED	SW	10-05-07
CHECKED	KAK	10-05-07
ENGINEER	SW	10-05-07
REVIEWED		
WORK ORDER NO.	07	2032
CONTRACT NO.		

PHPK Technologies

2111 BUILDERS PLACE - COLUMBUS, OH 43204

ORIGINAL RELEASE DATE

10-05-07

DRAWING TITLE

YALE T962 CRYOSTAT OUTER VESSEL WELDMENT

DRAWING NO:

07-2032-BM-6502

REVISION LETTER: C

PART NUMBER

NO. REQUIRED

NEXT ASSEMBLY

BILL OF MATERIAL

REVISION LTR-NOTE	QTY.	UNITS	COST CODE	ITEM NUMBER	PART NUMBER	DESCRIPTION	MATERIAL	PURCH NOTES
	1	EA		1	COM'L	HEAD, ASME F&D - 1/4" NOM THK (.19" MIN) X 42" OD WITH 1 1/2" SF, WELD PREP I.D. @ 37 1/2° WITH NO LAND (SHARP EDGE)	ASME SA240 304	1, 7
	1	EA		5	COM'L	HEAD, ASME F&D - 1/4" NOM THK (.19" MIN) X 42" OD WITH 1 1/2" SF, WELD PREP O.D. @ 37 1/2° WITH 1/32" LAND	ASME SA240 304	1, 7
	1	EA		10	COM'L	CYLINDER - 1/4" THK X 43 3/4" LONG X 42" OD BEVEL ONE END ON I.D. @ 37 1/2° WITH NO LAND (SHARP EDGE) BEVEL ONE END ON O.D. @ 37 1/2° WITH 1/32" LAND	ASME SA240 304	7
	2	EA		15	COM'L	PLATE RING - 2 3/4" THK X 41.50" ID X 48.00" OD	ASME SA240 304	2, 7
	1	EA		20	COM'L	PLATE RING - 1 3/4" THK X 14.00" ID X 18.00" OD	ASME SA240 304	3, 7
	1	EA		25	COM'L	PLATE CIRCLE - 3/4" THK X 18.00" OD	ASME SA240 304	4, 7
~~C4~~	~~1~~	~~EA~~		~~30~~	~~COM'L~~	~~PIPE, 24" NPS STD WT (.375" WALL) WELDED X 16" LG~~	~~ASME SA312 TP304~~	~~7~~
	1	EA		35	COM'L	PIPE, 14" NPS SCH 30 (.375" WALL) WELDED X 3 1/2" LG	ASME SA312 TP304	7
~~C4~~	~~1~~	~~EA~~		~~40~~	~~COM'L~~	~~PIPE, 6" NPS SCH 40 (.280" WALL) WELDED X 3" LG~~	~~ASME SA312 TP304~~	~~7~~
B1	1	EA		42	07-00-0019	TUBE, 1" OD X .065" WALL X 7/8" LG. SEAMLESS	ASME SA269 304L	
B1	2	EA		43	07-00-0020	TUBE, 2" OD X .065" WALL X 7/8" LG. SEAMLESS	ASME SA269 304L	
~~C4~~	~~1~~	~~EA~~		~~45~~	~~COM'L~~	~~TUBE, 4" OD X .25" WALL X 8" LG~~	~~G-10~~	~~5~~
B1	2	EA		47	COM'L	ELBOW, 2" OD X .065" WALL - KJ LESKER P/N G-2WC-200	304L SST	
~~A1, B4~~	~~1~~	~~EA~~		~~50~~	~~COM'L~~	~~PLATE, .190" THK X 26 1/4" LG. ROLLED TO 21" INS RAD.~~	~~ASME SA240 304~~	~~6, 7~~
B1	1	EA		60	COM'L	O-RING, 1/4" CROSS SECTIONAL DIA X 14 1/2" ID FACTORY VULCANIZED	VITON - 75 DUROMETER	
B1	1	EA		62	COM'L	O-RING, 3/8" CROSS SECTIONAL DIA X 43" ID FACTORY VULCANIZED	VITON - 75 DUROMETER	
B1	1	EA		70	COM'L	FLANGE, QF25 X 1" - KJ LESKER P/N QF25-100-SBB	304L SST	
B1	2	EA		72	COM'L	FLANGE, QF50 X 2" - KJ LESKER P/N QF50-200-SBB	304L SST	
B1	1	EA		80	70-001-050	BRACKET, ASME CODE NAMEPLATE	304 SST	
B1	1	EA		85	02-001-060	NAMEPLATE, ASME DIV 1 PRESSURE VESSEL	304 SST	
B1	16	EA		90	10-0200-64	SCREW, HEX HD 5/8"-11UNC X 2 3/4" LG.	ASME SA193 GR B8	
B1	20	EA		91	10-0200-65	SCREW, HEX HD 5/8"-11UNC X 5 1/2" LG.	ASME SA193 GR B8	
B1	36	EA		95	10-4100-01	NUT, HEX, 5/8"-11UNC	ASME SA194 GR. 8	

PURCHASING NOTES:

1 THICKNESS OF HEAD AS CALLED OUT IN BILL OF MATERIAL INCLUDES A MINIMUM OF 1/16" EXTRA MATERIAL FOR FORMING ALLOWANCES. DO NOT INCREASE HEAD THICKNESS WITHOUT NOTIFICATION TO PHPK PROJECT ENGINEER.

2 IF RING IS ORDERED PRE-MACHINED THEN SKETCH 07-2032-6502-15 MUST ACCOMPANY QUOTE AND PO.
IF RING IS ORDERED ROUGH CUT THEN SUPPLIER MUST ADD ENOUGH EXTRA MATERIAL TO ACHIEVE DIMENSION SHOWN ON SKETCH.
FINISHED THICKNESS IS 2.25" AFTER WELDING TO CYLINDER OR HEAD.

3 FINISHED THICKNESS FOR THIS PLATE CIRCLE IS 1.375" AFTER WELDING TO 14" PIPE.

4 FINISHED THICKNESS FOR THIS PLATE CIRCLE IS .50" AFTER FINAL MACHINING.

5 THIS MATERIAL IS IN PHPK RESIDUAL STOCK

~~6 SEE SKETCH 07-2032-6502-50~~

7 CERTIFIED MATERIAL TEST REPORTS INCLUDING PHYSICAL AND CHEMICAL ANALYSIS ARE REQUIRED WITH THIS MATERIAL.

REVISIONS

CHANGE	DATE	DWN	CHK	EDR	DESCRIPTION
N/C	10-04-07	SW			1) ADDED ITEM 2) REVISED QUANTITY 3) REVISED DESCRIPTION 4) DELETED ITEM
A	10-15-07	SW			1) ADDED ITEM 2) REVISED QUANTITY 3) REVISED DESCRIPTION 4) DELETED ITEM
B	11-14-07	CD	SW	3348	1) ADDED ITEM 2) REVISED QUANTITY 3) REVISED DESCRIPTION 4) DELETED ITEM
C	12-10-07	CD	SW	3374	1) ADDED ITEM 2) REVISED QUANTITY 3) REVISED DESCRIPTION 4) DELETED ITEM

	NAME	DATE		
PREPARED	SW	10-05-07	**PHPK Technologies**	DRAWING NO:
CHECKED	KAK	10-05-07	**2111 BUILDERS PLACE - COLUMBUS, OH 43204**	**07-2032-BM-6503**
ENGINEER	SW	10-05-07	ORIGINAL RELEASE DATE	DRAWING TITLE / REVISION LETTER: B
REVIEWED			10-05-07	**YALE T962 CRYOSTAT CHIMNEY WELDMENT** / PART NUMBER
WORK ORDER NO.	07	2032		NO. REQUIRED
CONTRACT NO.				NEXT ASSEMBLY

BILL OF MATERIAL

REVISION LTR-NOTE	QTY.	UNITS	COST CODE	ITEM NUMBER	PART NUMBER	DESCRIPTION	MATERIAL	PURCH NOTES
A2	1	EA		1	COM'L	PLATE RING - 2" THK X 17.00" ID X 24.00" OD	ASME SA240 304	1, 7
A2	1	EA		2	COM'L	PLATE RING - .75" THK X 18.06" ID X 23.19" OD	ASME SA240 304	3, 7
~~B4~~	~~1~~	~~EA~~		~~15~~	~~COM'L~~	~~PLATE CIRCLE - 1" THK X 24.00" OD~~	~~ASME SA240 304~~	~~2, 7~~
	1	EA		20	COM'L	PIPE, 18" NPS EXTRA STRONG (.50" WALL) WELDED X 12 3/16" LG	ASME SA312 TP304	7
	1	EA		30	COM'L	PIPE, 18" NPS SCH 5S (.165" WALL) WELDED X 7 5/16" LG	ASME SA312 TP304	7
~~B4~~	~~3~~	~~EA~~		~~35~~	~~COM'L~~	~~TUBE, 3/4" OD X 1/16" WALL X 2 5/8" LG~~	~~G-10~~	~~4~~
B1	1	EA		38	07-30-0012	TUBE, 1 1/2" OD X .083" WALL X 1 3/4" LG. SEAMLESS	ASME SA269 304L	
B1	1	EA		40	COM'L	FLANGE, FIXED - 2 3/4" CF, KJ LESKER P/N F0275X150N	304L	
B1	1	EA		45	COM'L	FLANGE, BLANK - 2 3/4" CF, KJ LESKER P/N F0275X000N	304L	
B1	1	EA		50	COM'L	GASKET - 2 3/4" CF, KJ LESKER P/N GA-0275	OFHC COPPER	
B1	4	EA		60	COM'L	PLATE, 1/8" THK X 3/4" X 1"	ASME SA240 304	
B1	1	EA		70	12-001-090	MALE WELD CONNECTOR, 1/2" OD, SWAGELOK P/N SS-810-1-8W	SST	
B1	6	EA		90	10-0100-61	SCREW, HEX HD MACH, 1/4-20UNC X 1 3/8" LG.	18-8 SST	
B1	6	EA		95	10-4000-04	NUT, HEX, 1/4"-20UNC	18-8 SST	

PURCHASING NOTES:

1 IF RING IS ORDERED PRE-MACHINED THEN SKETCH 07-2032-6503-01 MUST ACCOMPANY QUOTE AND PO.
IF RING IS ORDERED ROUGH CUT THEN SUPPLIER MUST ADD ENOUGH EXTRA MATERIAL TO ACHIEVE DIMENSION SHOWN ON SKETCH.
FINISHED THICKNESS IS 1.50" AFTER WELDING TO CYLINDER OR HEAD.

~~2 FINISHED THICKNESS FOR THIS PLATE CIRCLE IS .75" AFTER FINAL MACHINING.~~

3 THIS IS NOT A SEALING FLANGE - THE DIMENSIONS SHOWN IN THE BILL ARE THE FINISHED DIMENSIONS.

~~4 THIS MATERIAL IS IN PHPK RESIDUAL STOCK~~

5

6

7 CERTIFIED MATERIAL TEST REPORTS INCLUDING PHYSICAL AND CHEMICAL ANALYSIS ARE REQUIRED WITH THIS MATERIAL.

REVISIONS

CHANGE	DATE	DWN	CHK	EDR	DESCRIPTION
N/C	10-04-07	SW	SW		1) ADDED ITEM 2) REVISED QUANTITY 3) REVISED DESCRIPTION 4) DELETED ITEM
A	10-15-07	SW	SW		1) ADDED ITEM 2) REVISED QUANTITY 3) REVISED DESCRIPTION 4) DELETED ITEM
B	11-15-07	CD	SW	3356	1) ADDED ITEM 2) REVISED QUANTITY 3) REVISED DESCRIPTION 4) DELETED ITEM

	NAME	DATE
PREPARED	CD	12-3-07
CHECKED	SW	12-3-07
ENGINEER	SW	12-3-07
REVIEWED		
WORK ORDER NO.	07	2032
CONTRACT NO.		

PHPK Technologies

2111 BUILDERS PLACE - COLUMBUS, OH 43204

ORIGINAL RELEASE DATE

12-3-07

DRAWING TITLE

YALE T962 CRYOSTAT CHIMNEY ASSY

DRAWING NO:

07-2032-BM-6504

REVISION LETTER:	N/C
PART NUMBER	07-2032-6504
NO. REQUIRED	1
NEXT ASSEMBLY	07-2032-6500

BILL OF MATERIAL

REVISION LTR-NOTE	QTY.	UNITS	COST CODE	ITEM NUMBER	PART NUMBER	DESCRIPTION	MATERIAL	PURCH NOTES
	1	EA		1	07-2032-6503	CHIMNEY WELDMENT		
	1	EA		5	07-2032-6506	COVER PLATE ASSY		
	1	EA		10	COM'L	SEAL GARLOCK HELICOFLEX P/N H-310209		1
	1	EA		15	COM'L	SEAL GARLOCK HELICOFLEX P/N H-310210		1
	26	EA		20	COM'L	SCREW, HEX HD 5/8"-11UNC X 3 1/4" LG.	ASME SA320 GR B8	
	26	EA		25	10-4100-01	NUT, HEX, 5/8"-11UNC	ASME SA194 GR B8	

PURCHASING NOTES:

1 REFER TO GARLOCK HELICOFLEX QUOTATION No. 101116.

REVISIONS

CHANGE	DATE	DWN	CHK	EDR	DESCRIPTION
N/C					1) ADDED ITEM 2) REVISED QUANTITY 3) REVISED DESCRIPTION 4) DELETED ITEM

	NAME	DATE
PREPARED	CD	12-3-07
CHECKED	SW	12-3-07
ENGINEER	SW	12-3-07
REVIEWED		
WORK ORDER NO.	07	2032
CONTRACT NO.		

PHPK Technologies

2111 BUILDERS PLACE - COLUMBUS, OH 43204

ORIGINAL RELEASE DATE

12-3-07

DRAWING TITLE

YALE T962 CRYOSTAT COVER PLATE ASSY

DRAWING NO:

07-2032-BM-6506

REVISION LETTER:	N/C
PART NUMBER	07-2032-6506
NO. REQUIRED	1
NEXT ASSEMBLY	07-2032-6504

BILL OF MATERIAL

REVISION LTR-NOTE	QTY.	UNITS	COST CODE	ITEM NUMBER	PART NUMBER	DESCRIPTION	MATERIAL	PURCH NOTES
	1	EA		1	COM'L	PLATE CIRCLE - 1" THK X 24.00" OD	ASME SA240 304	1, 2, 3
	1	EA		5	COM'L	PLATE, RING - 1/4" THK X 6.65 ID X 7.62" OD	ASME SA240 304	
	1	EA		10	07-07-0088	PIPE, 6" NPS SCH 40 (.280" WALL) WELDED X 2 3/8" LG	ASME SA312 TP304	
	3	EA		20	07-00-0017	TUBE, 1/2" OD X .035" WALL X 2 11/16" LG. SEAMLESS	ASME SA269 304L	
	1	EA		22	07-00-0019	TUBE, 1" OD X .065" WALL X 7/8" LG. SEAMLESS	ASME SA269 304L	
	3	EA		24	07-30-0013	TUBE, 1 1/2" OD X .188" WALL X 3 1/4" LG. SEAMLESS	ASME SA269 304L	
	2	EA		26	07-30-0014	TUBE, 3" OD X .250" WALL X 4 13/16" LG. SEAMLESS	ASME SA269 304L	
	1	EA		28	07-30-0009	TUBE, 6" OD X .065" WALL X 5 3/16" LG. SEAMLESS	ASME SA269 304L	
	3	EA		30	COM'L	FLANGE, FIXED - 2 3/4" CF, KJ LESKER P/N F0275X150N	304L	
	2	EA		32	COM'L	FLANGE, FIXED - 4 5/8" CF, KJ LESKER P/N F0462X300N	304L	
	1	EA		34	COM'L	FLANGE, FIXED - 8" CF, KJ LESKER P/N F0800X600N	304L	
	1	EA		36	COM'L	FLANGE, QF25 X 1", KJ LESKER P/N QF25-100-SBB	304L	
	3	EA		40	COM'L	FLANGE, BLANK - 2 3/4" CF, KJ LESKER P/N F0275X000N	304L	
	2	EA		42	COM'L	FLANGE, BLANK - 4 5/8" CF, KJ LESKER P/N F0462X000N	304L	
	1	EA		44	COM'L	FLANGE, BLANK - 8" CF, KJ LESKER P/N F0800X000N	304L	
	3	EA		50	COM'L	GASKET - 2 3/4" CF, KJ LESKER P/N GA-0275	OFHC COPPER	
	2	EA		52	COM'L	GASKET - 4 5/8" CF, KJ LESKER P/N GA-0462	OFHC COPPER	
	1	EA		54	COM'L	GASKET - 8" CF, KJ LESKER P/N GA-0800	OFHC COPPER	
	3	EA		60	12-001-131	GLAND, 1/2" VCR TO 1/2" TUBE SW, SWAGELOK P/N SS-8-VCR-3	316 SST	
	3	EA		61	12-001-123	WELD UNION, 1/2" OD, SWAGELOK P/N SS-8-TSW-6	316 SST	
	3	EA		62	12-001-132	MALE NUT, VCR, 1/2" OD, SWAGELOK P/N SS-8-VCR-4	316 SST	
	4	EA		70	COM'L	HOIST RING, 1/4"-20, McMASTER-CARR P/N 2994T59	FORGED STL	
	2	EA		80	COM'L	NUT, COUPLING, 1/4"-20UNC, McMASTER-CARR P/N 90268A029	18-8 SST	
	1	EA		82	COM'L	NUT, COUPLING, 5/16"-18UNC, McMASTER-CARR P/N 90268A030	18-8 SST	
	18	EA		90	10-0100-61	SCREW, HEX HD MACH, 1/4-20UNC X 1 3/8" LG.	18-8 SST	
	20	EA		92	10-0100-79	SCREW, HEX HD MACH, 5/16-18UNC X 2" LG.	18-8 SST	
	20	EA		94	10-0100-63	SCREW, HEX HD MACH, 5/16-18UNC X 2 1/4" LG.	18-8 SST	
	18	EA		96	10-4000-04	NUT, HEX, 1/4"-20UNC	18-8 SST	
	40	EA		98	10-4000-05	NUT, HEX, 5/16"-18UNC	18-8 SST	

PURCHASING NOTES:

1 THIS ITEM HAVE BEEN PREVIOUSLY PROCURED ON 07-2032-BM-6503 AS ITEM #15.

2 FINISHED THICKNESS FOR THIS PLATE CIRCLE IS .75" AFTER FINAL MACHINING.

3 CERTIFIED MATERIAL TEST REPORTS INCLUDING PHYSICAL AND CHEMICAL ANALYSIS ARE REQUIRED WITH THIS MATERIAL.

REVISIONS

CHANGE	DATE	DWN	CHK	EDR	DESCRIPTION
N/C					1) ADDED ITEM 2) REVISED QUANTITY 3) REVISED DESCRIPTION 4) DELETED ITEM

	NAME	DATE
PREPARED	CD	11-16-07
CHECKED	SW	11-19-07
ENGINEER	SW	11-19-07
REVIEWED		
WORK ORDER NO.	07	2032
CONTRACT NO.		

PHPK Technologies

2111 BUILDERS PLACE - COLUMBUS, OH 43204

ORIGINAL RELEASE DATE

11-20-07

DRAWING TITLE

YALE T962 CRYOSTAT SADDLE ASSY

DRAWING NO:

07-2032-BM-6507

REVISION LETTER:	N/C
PART NUMBER	07-2032-6507
NO. REQUIRED	2
NEXT ASSEMBLY	07-2032-6500

BILL OF MATERIAL

REVISION LTR-NOTE	QTY.	UNITS	COST CODE	ITEM NUMBER	PART NUMBER	DESCRIPTION	MATERIAL	PURCH NOTES
	1	EA		1	COM'L	PLATE, 1/2" THK X 56" X 8"	ASME SA240 304	
	2	EA		5	COM'L	PLATE, 1/2" THK X 48" X 21 1/8"	ASME SA240 304	
	2	EA		10	COM'L	PLATE, 1/2" THK X 5" X 15"	ASME SA240 304	
	2	EA		15	COM'L	PLATE, 1/2" THK X 5" X 21 1/8"	ASME SA240 304	

PURCHASING NOTES:

REVISIONS

CHANGE	DATE	DWN	CHK	EDR	DESCRIPTION
N/C					1) ADDED ITEM 2) REVISED QUANTITY 3) REVISED DESCRIPTION 4) DELETED ITEM

	NAME	DATE
PREPARED	CD	11-16-07
CHECKED	SW	11-19-07
ENGINEER	SW	11-19-07
REVIEWED		
WORK ORDER NO.	07	2032
CONTRACT NO.		

PHPK Technologies

2111 BUILDERS PLACE - COLUMBUS, OH 43204

ORIGINAL RELEASE DATE

11-20-07

DRAWING TITLE

YALE T962 CRYOSTAT SUPPORT ASSY

DRAWING NO:

07-2032-BM-6511

REVISION LETTER:	N/C
PART NUMBER	07-2032-6511
NO. REQUIRED	3
NEXT ASSEMBLY	07-2032-6500

BILL OF MATERIAL

REVISION LTR-NOTE	QTY.	UNITS	COST CODE	ITEM NUMBER	PART NUMBER	DESCRIPTION	MATERIAL	PURCH NOTES
	1	EA		1	COM'L	PLATE, 1/2" THK X 16" X 6"	ASME SA240 304	
	2	EA		5	COM'L	PLATE, 1/2" THK X 5 5/8" X 6"	ASME SA240 304	

PURCHASING NOTES:

REVISIONS

CHANGE	DATE	DWN	CHK	EDR	DESCRIPTION
N/C					1) ADDED ITEM 2) REVISED QUANTITY 3) REVISED DESCRIPTION 4) DELETED ITEM

	NAME	DATE
PREPARED	CD	11-16-07
CHECKED	SW	11-19-07
ENGINEER	SW	11-19-07
REVIEWED		
WORK ORDER NO.	07	2032
CONTRACT NO.		

PHPK Technologies

2111 BUILDERS PLACE - COLUMBUS, OH 43204

ORIGINAL RELEASE DATE

11-20-07

DRAWING TITLE

YALE T962 CRYOSTAT SUPPORT ASSY

DRAWING NO:

07-2032-BM-6512

REVISION LETTER:	N/C
PART NUMBER	07-2032-6512
NO. REQUIRED	2
NEXT ASSEMBLY	07-2032-6500

BILL OF MATERIAL

REVISION LTR-NOTE	QTY.	UNITS	COST CODE	ITEM NUMBER	PART NUMBER	DESCRIPTION	MATERIAL	PURCH NOTES
	1	EA		1	COM'L	PLATE, 1/2" THK X 4 1/2" X 6"	ASME SA240 304	
	1	EA		5	COM'L	PLATE, 1/2" THK X 5" X 6"	ASME SA240 304	
	1	EA		10	COM'L	PLATE, 1/2" THK X 9 3/16" X 6"	ASME SA240 304	

PURCHASING NOTES:

REVISIONS

CHANGE	DATE	DWN	CHK	EDR	DESCRIPTION
N/C					1) ADDED ITEM 2) REVISED QUANTITY 3) REVISED DESCRIPTION 4) DELETED ITEM

Yale Cryostat Alteration

R 8

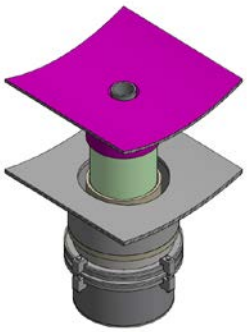

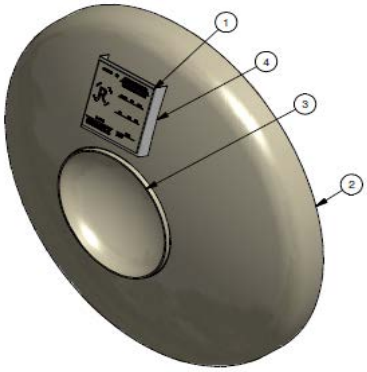

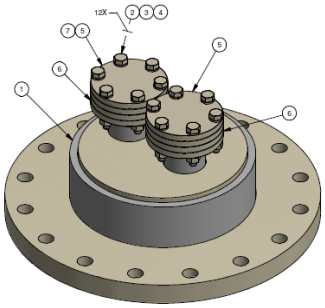

Inspection Reports & Certified Material Test Reports
Modification to Sales Order 07-2032 T962 Cryostat (NB 21)
PHPK Work Order No. 12-4007
Customer P.O. No. SNP5773281

Table of Contents

I Certificate of Conformance

II Yale University Cryostat Alteration
- Test Summary Report
- ASME Inspection Checklist
- Helium Mass Spectrometer Leak Test Report
- Final Pressure Test Report, AI Witness
- Report of Alteration, Form R-2

III 12-4007-0501, Drain Tube Assembly (MOD 1)
- Material & Weld Traceability Record, 6510
  - 12-4007-6510
  - 12-4007-6511
- Penetrant Inspection Report

IV 12-4007-0502, Inner Head (MOD 2)
- Material & Weld Traceability Record, 6522
  - 12-4007-6522

V 12-4007-0503, Inner Nozzle Flange (MOD 3)
- Material & Weld Traceability Record, 6533
  - 12-4007-6533
- Material & Weld Traceability Record, 6534
  - 12-4007-6534/12-4007-6535
- Manufacturers Partial Data Report, Form U-2A
  - NB 66

VI Certified Material Test Reports
- Pipe & Tube
- Plate
- Weld Wire

Section I

Certificate of Conformance

2111 Builders Place, Columbus, Ohio 43204 • Office 614-486-4750 • Fax 614-486-4950 • www.phpk.com

CERTIFICATE OF CONFORMANCE

Yale University
PO Box 208228
New Haven, CT 06520

PHPK Technologies certifies that all items furnished in this shipment are in full compliance with all purchase order and specification requirements of this contract and were manufactured in accordance with PHPK Quality Assurance Manual, Edition 2, Revision 1, dated June 30, 2011.

PHPK personnel and/or Contractors performing non-destructive testing (NDT) are in compliance with ASNT recommended practice TC-1A. PHPK welding personnel have been certified in accordance with ASME BPV Code Section IX Article III.

All examination has been performed with approved PHPK test procedures. Test reports represent the actual attributes of the items furnished and are in full compliance with all applicable specifications and purchase order requirements.

The materials used to construct the components used for the *T962 Cryostat Alteration* are suitable for their intended use and meet the required specifications of this project. PHPK Technologies purchase all materials with *physical* and *chemical* analysis that are kept on file at our facility. This ensures all products, whether standard or custom, are constructed of the correct materials, regardless of whether the customer requires certifications or traceability. Materials of construction are specified for each part by engineering personnel to comply with the appropriate ASME Codes, proven PHPK design, customer specification, and/or other industrial codes.

All related Certifications, Reports, and Documents not presented on final delivery of contract will be retained by PHPK for future referral.

PHPK Sales Order: 12-4007
Customer PO: SNP5773281

Keith Brown
Quality Assurance Manager
PHPK Technologies

3/29/13
Date

Section II

Yale University Cryostat Alteration

- Test Summary Report
- Helium Mass Spectrometer Leak Test Report
- Final Pressure Test Report
- Form R-2

TEST SUMMARY REPORT
CERTIFICATE of CONFORMANCE

PHPK Technologies certifies that the following test have been performed on material and / or equipment supplied to Yale University on Sales Order 12-4007.

The test(s) meet the requirements of the Purchase Order and the applicable Code, Drawings and Standards.

PHPK SO#	12-4007	**DWG or Part #**	07-2032-6500
PHPK Serial #	4866 (U-Part MOD 3)	**Registration / I.D. #**	R 8 & NB 66
Description	**Yale University Alteration**		
	Modification 1-3 (Drawings 12-4007-0501,0502,0503)		

	Accepted	*Not Accepted	* Not Applicable	Supporting Documentation	Test, Inspection, Operation performed or Documentation required
1)	✓			✓	Dye Penetrant
2)			✓		Magnetic Particle
3)			✓		Radiographic Insp. Welds
4)	✓				Visual Weld Inspection
5)	✓				Dimensional Inspection
6)	✓			✓	Pressure Test ☐ Hydrostatic ☑ Pneumatic
7)	✓			✓	Mass Spectrometer Leak Test
8)			✓		Cold Shock Test
9)			✓		Valve Body Casting 100% Zyglo and Radiographed
10)			✓		Operational Test
11)			✓		Leak Test Across Seat
12)	✓				Cleanliness Inspection ☑ Visual ☐ Blacklight ☐ Other
13)			✓		Bake out
14)			✓		Vacuum Retention
15)	✓			✓	Material Certifications
16)	✓			✓	ASME Code stamp and Name plate
17)			✓		LOX Cleaning
18)					

* If not acceptable, List item number and reason for non-acceptance below.

COMMENTS

PHPK performed (3) three modificationsof existing cryostat. Modification 3 was fabricated as a U-Part (NB 66).

Form R-2 for Alteration (R 8) and Form U-2A Partial Data Report for U-Part (NB 66) completed for project.

Keith Brown

Quality Assurance Manager
Authorizing Signature
PHPK Technologies

3/29/13
Date

Document Name: ASME INSPECTION CHECKLIST	PHPK Technologies FORM	Number: QUAL-FO-0004	
		Rev. Ltr.: A	Page 1 of 1

ASME INSPECTION CHECKLIST

Sales Order No: 12-4007 Customer: Yale University

Calc No: 12-4007-9910 Dwg No: 0501,0502,0503 R No: 8

Org. NB / Serial No: 21/4821 Dwg Title: MOD 1-MOD 3

ASME Construction U U2 U Part NBIC Alteration

	Item	PHPK QA	Date	ASME A.I.	Hold Point	Date
Item Description Per Attachment	Initial Review	KB		BS	*	2/27/13
	Calculations	KB		BS	*	2/27/13
	Drawings	KB		BS	*	2/27/13
	Work Tickets	KB				
	Weld Procedures	KB				
	Post Weld Heat Treat	N/A				
	Impact Testing	N/A				
	Welder Qualifications	KB		BS		3/29/13
	Material & Weld Traceability Record	KB		BS		3/29/13
	Fit-Up Inspection	KB		BS	X	2/27/13
	Non-Destructive Testing MSLT RT LT VT UT PT	KB			X	
	Pressure Test @ 49.5 psig	KB		BS	X	3/29/13
	Non-Conformance Reports	KB			*	
	Code Plate Review	KB		BS	X	3/29/13
	Data Reports	KB		BS	X	3/29/13

Comments:
MOD 1: adds a drain port to the bottom of the inner vessel.
MOD 2: adds a custom shape torispherical head onto the center of the existing 30" OD head.
MOD 3: adds a bolted hat assembly to the existing laterial port (11.25" OD) flange. This will be manufactured as a U-Part.
AI Hold Point on 6522 fit-up on item3 to item 2.
MWTR's issued for 6510, 6522, 6533, 6534.

PHPK Technologies
2111 Builders Place
Columbus, Ohio 43204

MSLT/PRESSURE COMBINATION REPORT

Sales Order: 12-4007 Drawing No.: 07-2032-6500 (NB 21) PHPK Specification: ☒ QUAL-PR-0019

Description: Yale Cryostate Alteration (R 8)

Test Equipment: { Mass Spec. Veeco MS-40 Calibrated Leak S/N: 1317 Rate: 1.7×10^{-8} scc/sec A.E
Pressure Gage(s) S/N: C-22 Cal Due: 7/13 Ambient Temperature: 75^{0} F

EVENTS

1	Calibrated Leak (start)	4	Spray Open Vacuum Enclosure	7	Final Reading
2	Minimum Detectable Leak	5	Internal Piping Pressure	8	Calibrated Leak
3	Background Helium (after tie in)	6	Spray Bagged System		

RESULTS

START	END	EVENT	INDICATION* scc/sec A.E	LEAK**	COMMENTS	Pressure Media N	Pressure Media He
		1	1.7×10^{-8}		Design Pressure = 45 psig		
		2	0.2×10^{-10}		Test Pressure = 50 psig		
		3	2.6×10^{-9}				
1:00	1:02	4	2.6×10^{-9}		Spray 2 Minutes		X
1:02	1:03	5	2.6×10^{-9}		12.50 psi Hold 1 min		X
1:03	1:04		2.6×10^{-9}		25.00 psi Hold 1 min	X	X
1:04	1:05		2.6×10^{-9}		37.50 psi Hold 1 min	X	X
1:05	1:25		2.6×10^{-9}		50.00 psi Hold 1 min	X	X
1:25	1:32	6	2.6×10^{-9}		45.00 psi Spray 2 min Hold 5 min		X
		7	2.6×10^{-9}				
		8	1.7×10^{-8}				

This MSLT Combo Test Report performed on the completed vessel and includes all modifications (MOD 1-3). An additional Pressure Test shall be performed and witnessed by our Authorized Inspector for Code compliance.

* Actual Reading

** Difference between MDL (Background) indication and present reading.

Final Disposition

☒ ACCEPT

☐ REJECT

PERFORMED BY		DATE	WITNESSED BY
Tim Cordle	L II	3/28/2013	Keith Brown

PHPK TECHNOLOGIES

CVI Torr Master®

2111 Builders Place, Columbus, Ohio 43204 • Office 614-486-4750 • Fax 614-486-4950 • www.phpk.com

Pressure Test Report

Sales Order 12-4007 Drawing No. 07-2032-6500 (NB 21)

Customer Yale University

Description Yale Cryostat Alteration (R 8) on Original T962 Cryostat (NB 21)

Project Engineer S. Willming Tested By T. Cordle

PHPK Specification QUAL-PR-0017 Disposition By K. Brown

Hydrostatic ☐ Test Pressure _____ psig Time 15 minutes

Pneumatic ☒ Test Medium Air☐ N_2☒ H_2☐ Other☐ _____

Gage S/N (#1) C-22 Cal Due 7/13/13 Gage S/N (#2) _____ Cal Due _____

RESULTS

Applied 50 PSIG (N_2)

Held For 15 Minutes

Start Time : 10:30 PM

End Time : 10:45 PM

Pressurized with N_2 and bubble tested all welds and connections.

NO INDICATIONS OR PRESSURE DECAY NOTED AT TIME OF INSPECTION

Final Disposition

☒ **ACCEPT**	Tim Cordle	3/29/13	Brad Seesholtz 3/29/13
☐ **REJECT**	PERFORMED BY	DATE	WITNESSED BY

FORM R-2 REPORT OF ALTERATION

In accordance with provisions of the *National Board Inspection Code*

CONSTRUCTION REPORT

1. Construction performed by **PHPK Technologies** (Name of "R" organization responsible for construction) **8** (Form "R"

2111 Builders Place, Columbus, Ohio, 43204 (address) **12-4007** (PO No., Job No., etc.)

2. Owner **Yale University** (name)

PO Box 208228, New Haven, Connecticut, 06520 (address)

3. Location of installation **Fermi National Accelerator Laboratory** (name)

Receiving Warehouse 2, Kirk Road and Wilson St., Batavia, Illinois, 60510 (address)

4. Item Identification **Pressure Vessel** (boiler, pressure vessel or piping) Name of original manufacturer **PHPK Technologies**

5. Identifying nos.: **4821** (mfg serial no.) **21** (National Board No.) **N/A** (Jurisdiction No.) **N/A** (other) **2007** (year built)

6. NBIC Edition / Addenda: **2011** (edition) **N/A** (addenda)

Original Code of Construction for Item: **ASME/Section VIII/Div 1** (name/ section/ division) **2004/A06** (edition/ addenda)

Construction Code to be used for Alteration performed: **ASME/Section VIII/Div 1** (name/ section/ division) **2010/2011A** (edition/ addenda)

7. Description of Construction Scope: (use supplemental sheet, Form R-4, if necessary) ☐ Form R-4, Report Supplementary Sheet is attached

1) Add liquid withdrawal port in bottom of vessel
2) Add 11" OD Convex Head into existing Concave Head on removable end.

Pressure Test, if applied **49.5 psi** MAWP **45 psi**

8. Replacement Parts. Attached are Manufacturer's Partial Data Reports or Form R-3s properly completed for the following items of this report:

N/A
(name of part, item number, data report type or Certificate of Compliance, mfg name, and identifying mark)

9. Remarks: **N/A**

CERTIFICATE OF DESIGN 8, ACKNOWLEDGED by CONSTRUCTION ORGANIZATION

(Identify the design organization's Form "R" Registration No. or referencing P.O., job, or tracking number if the Form "R" Report is not registered)

I, **Keith L. Brown** acknowledge the provisions and requirements of design described on the DESIGN REPORT, sheet 2, and the design was introduced into the construction scope as required by the *National Board Inspection Code.*

Date 04/02/2013 PHPK Technologies (name of construction organization) Signed Keith L. Brown (authorized representative)

CONSTRUCTION CERTIFICATION

I, **Keith L. Brown**, certify that to the best of my knowledge and belief the statements in this report are correct and that all materials, construction, and workmanship on this Alteration conforms to the *National Board Inspection Code.*

National Board "R" Certificate of Authorization No. **6728** expires on **08/17/2014**

Date 04/02/2013 PHPK Technologies (name of alteration organization) Signed Keith L. Brown (authorized representative)

CERTIFICATE OF INSPECTION

I, **Brock N. Seesholtz**, holding a valid Commission issued by The National Board of Boiler and Pressure Vessel Inspectors and certificate of competency issued by the jurisdiction of **KY, OH** and employed by **HSB CT** of **Hartford, CT** have inspected the work described in this report on **March 29, 2013** and state that to the best of my knowledge and belief this work complies with the applicable requirements of the *National Board Inspection Code.*

By signing this certificate, neither the undersigned nor my employer makes any warranty, expressed or implied, concerning the work described in this report. Furthermore, neither the undersigned nor my employer shall be liable in any manner for any personal injury, property damage or loss of any kind arising from or connected with this inspection.

Date **04/03/2013** Signed Brock Seesholtz (Inspector) Commission **13582, KY837, OH874** (National Board and Jurisdiction No.)

FORM R-2 REPORT OF ALTERATION

In accordance with provisions of the *National Board Inspection Code*

DESIGN REPORT

1. Design performed by **PHPK Technologies** (Name of "R" organization responsible for design) **8** (Form "R"

2111 Builders Place, Columbus, Ohio, 43204 (address) **N/A** (PO No., Job No., etc.)

2. Owner **Yale University** (name)

PO Box 208228, New Haven, Connecticut, 06520 (address)

3. Location of installation **Fermi National Accelerator Laboratory** (name)

Receiving Warehouse 2, Kirk Road and Wilson St., Batavia, Illinois, 60510 (address)

4. Item Identification **Pressure Vessel** (boiler, pressure vessel or piping) Name of original manufacturer **PHPK Technologies**

5. Identifying nos.: **4821** (mfg serial no.) **21** (National Board No.) **N/A** (Jurisdiction No.) **N/A** (other) **2007** (year built)

6. NBIC Edition / Addenda: **2011** (edition) **N/A** (addenda)

Original Code of Construction for Item: **ASME/Section VIII/Div 1** (name/ section/ division) **2004/A06** (edition/ addenda)

Construction Code to be Used for Alteration performed: **ASME/Section VIII/Div 1** (name/ section/ division) **2010/2011A** (edition/ addenda)

7. Description of Design Scope: (use supplemental sheet, Form R-4, if necessary) ☐ Form R-4, Report Supplementary Sheet is attached

1) Calculate weld size and reinforcement requirements of nozzle as required.

Pressure Test, if applied **49.5 psi** MAWP **45 psi**

8. Replacement Parts. Attached are Manufacturer's Partial Data Reports or Form R-3's properly completed for the following items of this report:

N/A

(name of part, item number, data report type or Certificate of Compliance, mfg's name, and identifying mark) - see supplemental sheet, Form R-4 for additional remarks pertaining to replacement

9. Remarks:

DESIGN CERTIFICATION

I, **Keith L. Brown**, certify that to the best of my knowledge and belief the statements in this report are correct and that the Design Change described in this Report conforms to the *National Board Inspection Code.*

National Board "R" Certificate of Authorization No. **6728** expires on **08/17/2014**

Date **03/29/2013** **PHPK Technologies** (Name of Design Organization) Signed Keith L. Brown (Authorized Representative)

CERTIFICATE OF DESIGN CHANGE REVIEW

I, **Brock N. Seesholtz**, holding a valid Commission issued by The National Board of Boiler and Pressure Vessel Inspectors and certificate of competency issued by the jurisdiction of **KY, OH** and employed by **HSB CT** of **Hartford, CT** have reviewed the design change as described in this report and state that to the best of my knowledge and belief such change complies with the applicable requirements of the *National Board Inspection Code.*

By signing this certificate, neither the undersigned nor my employer makes any warranty, expressed or implied, concerning the work described in this report. Furthermore, neither the undersigned nor my employer shall be liable in any manner for any personal injury, property damage or loss of any kind arising from or connected with this inspection.

Date **03/29/2013** Signed Brock Seesholtz (Inspector) Commissions **13582, KY837, OH874** (National Board and Jurisdiction No.)

Section III

Drain Tube Assembly

12-4007-0501 (MOD 1)

- Material & Weld Traceability Record, 6510
  - o Drawings, 6510 & 6511
- Liquid Penetrant Inspection Report

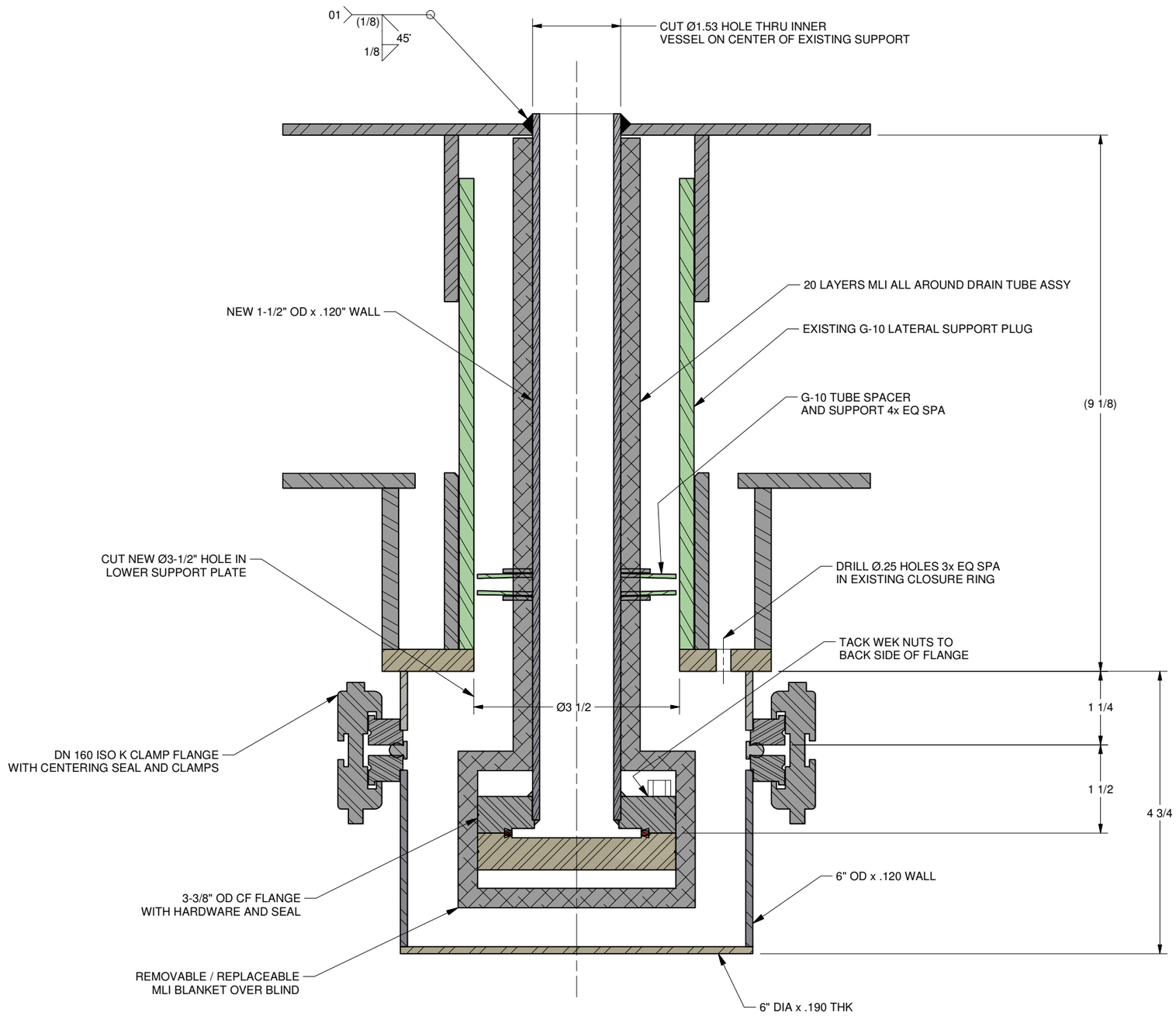

SECTION A-A

-- PHPK TECHNOLOGIES PROPRIETARY --
INFORMATION ON THIS DRAWING MAY NOT BE DISCLOSED TO ANY PARTY WITHOUT WRITTEN AUTHORIZATION FROM PHPK

WHERE USED

DRAWN BY	SPW	TOLERANCES	
CHECKED	MJA	FRACTION	± 1/8
ENGINEER	SPW	2 PL .XX	± .01
		3 PL .XXX	± .005
REVIEWED	MJA	ANGULAR	± 1/2°
RELEASE DATE	12/4/2012	6112	
		EDR NO	

DIMENSIONS ARE IN INCHES AND PROVIDED PRIOR TO SURFACE TREATMENTS, UNLESS NOTED.

PHPK TECHNOLOGIES
2111 BUILDERS PLACE
COLUMBUS, OH 43204
614-486-4750 WWW.PHPK.COM

TITLE
YALE LAR CRYOSTAT MODIFICATIONS
MOD 1 - MAIN ASSY

SIZE	DRAWING NUMBER	CHG
B	12-4007-0501	N/C

EST WEIGHT N/A v3.10.15 1 OF 1

PHPK TECHNOLOGIES	**Material & Weld Traceability Record**	12-4004-MWTR-6510
	PHPK Form QA-FO-0011	File Name

Drawing Number		Next Assembly Number	
Dwg #	Rev Ltr	Dwg #	Rev Ltr
12-4007-6510	A		

Drain Tube Assembly	**Modification 1**	
Work Ticket Number	Serial Number	Date Assembled
4007006	***R8***	3/4/2013

Put the heat number or serial number on the completed assembly with a permanent marker.

Parts & Subassemblies

Item	Part Number *(Dwg No - Item No)*	Heat Number *(Enter here or below)*	Description
10	07-2032-6501	2DV7	Original Inner Cryostat
4	12-4007-6511-02	835886	Tube, 1-1/2" OD x 0.12 Wall

Raw Material & Welding

Joint ID No	Items Joined		Item Heat Numbers		Weld Filler Metal Heat Number	Welder ID No.
	A	B	A	B		
JT-1	10	4	2DV7	835886	118442	P-15

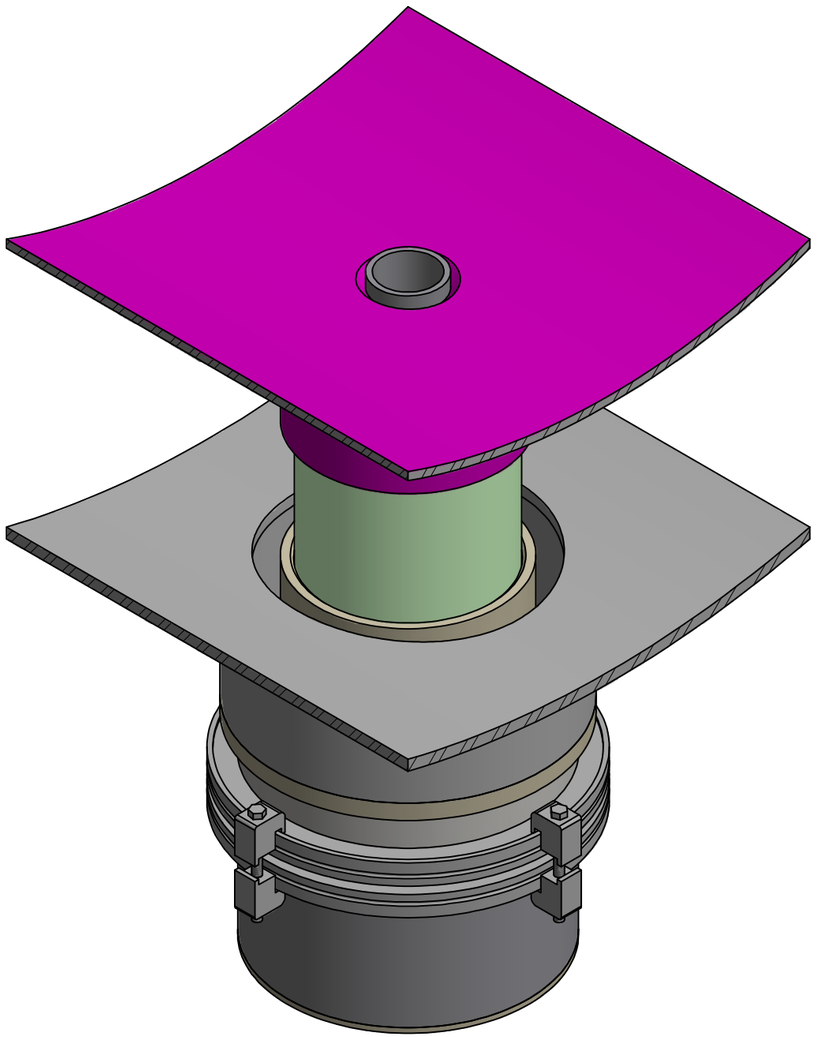

PARTS LIST

	ITEM	QTY	PART NUMBER	DESCRIPTION	TAG NUMBER	MATERIAL	NOTES
	1	4	*4007	CLAMP, ISO 160 - DOUBLE, KJ LESKER QF-SDC-AL2		ALUMINUM	
	2	1	*4007	SEAL RING - KJ LESKER No QF160-SABR			
	3	1	07-2032-6500	YALE T962 CRYOSTAT - FINAL ASSEMBLY			
	4	1	12-4007-6511	DRAIN TUBE ASSEMBLY			
	5	1	12-4007-6512	FIXED ISO FLANGE			
	6	1	12-4007-6513	REMOVABLE ISO FLANGE			
A1	7	10	50-024-010	ALUMINIZED MYLAR 1-1/2" WIDE x 1.00 SQ FT			
	8	10	50-025-010	REEMAY, 2" WIDE x 1.00 SQ FT			

GENERAL NOTES:

1) THIS DRAWING REPRESENTS MODIFICATION NUMBER 1 TO BE PERFORMED ON THE INNER AND OUTER VESSEL OF THE LIQUID ARGON CRYOSTAT SUPPLIED TO YALE ON PHPK SALES ORDER 07-2032.

2) THE MODIFICATION TO THE INNER VESSEL WILL BE INCLUDED IN A DESIGN REPORT DOSSIER AND REVIEWED BY AN AUTHORIZED INSPECTOR IN ACCORDANCE WITH THE NATIONAL BOARD INSPECTION CODE FOR APPLICATION OF "R" STAMP.

3) SEE DOCUMENT NUMBER 12-4007-9910 FOR ASME CODE CALCULATIONS FOR THE INNER VESSEL.

4) SEE DOCUMENT NUMBER 12-4007-9911 FOR ASME CODE CALCULATIONS FOR THE OUTER VESSEL.

5) PNUMATIC PRESSURE TEST INNER VESSEL 49.5 PSIG PER QUAL-PR-0017

6) HELIUM MASS SPEC LEAK TEST PER QUAL-PR-0018, 1x10-9 STD CC SEC AIR EQUIV. MAX

7) ALL INNER VESSEL WELDS MUST BE TRACEABLE, MWTR FORMS APPLY

REVISIONS

REV	DATE	DWN	CHK'D	ENG'R	RVW'D	EDR	DESCRIPTION
A	01/29/12	DMF	SPW	SPW	SPW	6202	1) CORRECTED PART NUMBER FOR ITEM #7

12-4007-0501 1 REQD

WHERE USED

DRAWN BY	DMF	TOLERANCES	
CHECKED	SPW	FRACTION	± 1/8
ENGINEER	SPW	2 PL .XX	± .01
		3 PL .XXX	± .005
REVIEWED	MJA	ANGULAR	± 1/2˚
RELEASE DATE	1/22/2013	6185 EDR NO	

DIMENSIONS ARE IN INCHES AND PROVIDED PRIOR TO SURFACE TREATMENTS, UNLESS NOTED.

PHPK TECHNOLOGIES
2111 BUILDERS PLACE
COLUMBUS, OH 43204
614-486-4750 WWW.PHPK.COM

TITLE
YALE LAR CRYOSTAT MODIFICATIONS
MODIFICATION 1, FINAL ASSEMBLY

SIZE B | DRAWING NUMBER 12-4007-6510 | CHG A

EST WEIGHT N/A | v3.10.15 | SHEET 1 OF 2

-- PHPK TECHNOLOGIES PROPRIETARY --
INFORMATION ON THIS DRAWING MAY NOT BE DISCLOSED TO ANY PARTY WITHOUT WRITTEN AUTHORIZATION FROM PHPK

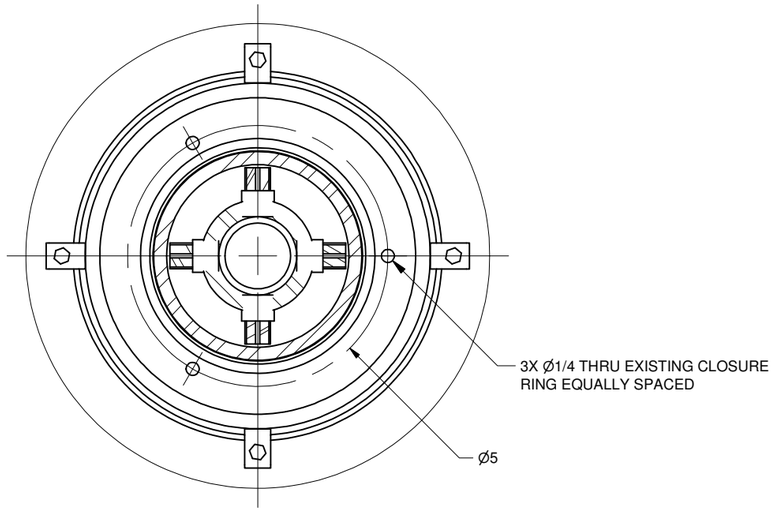

SECTION B-B

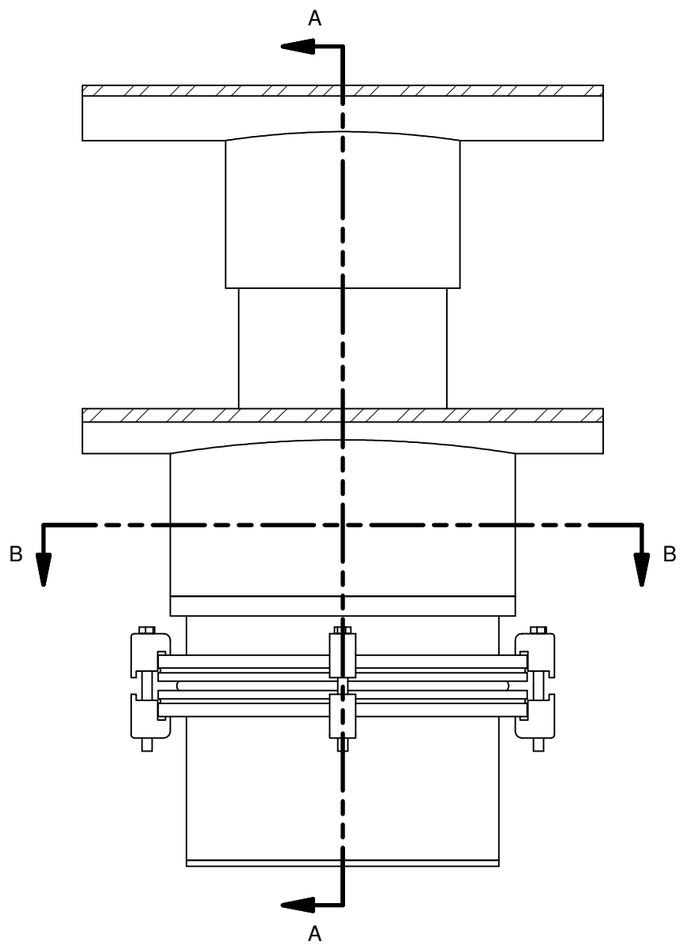

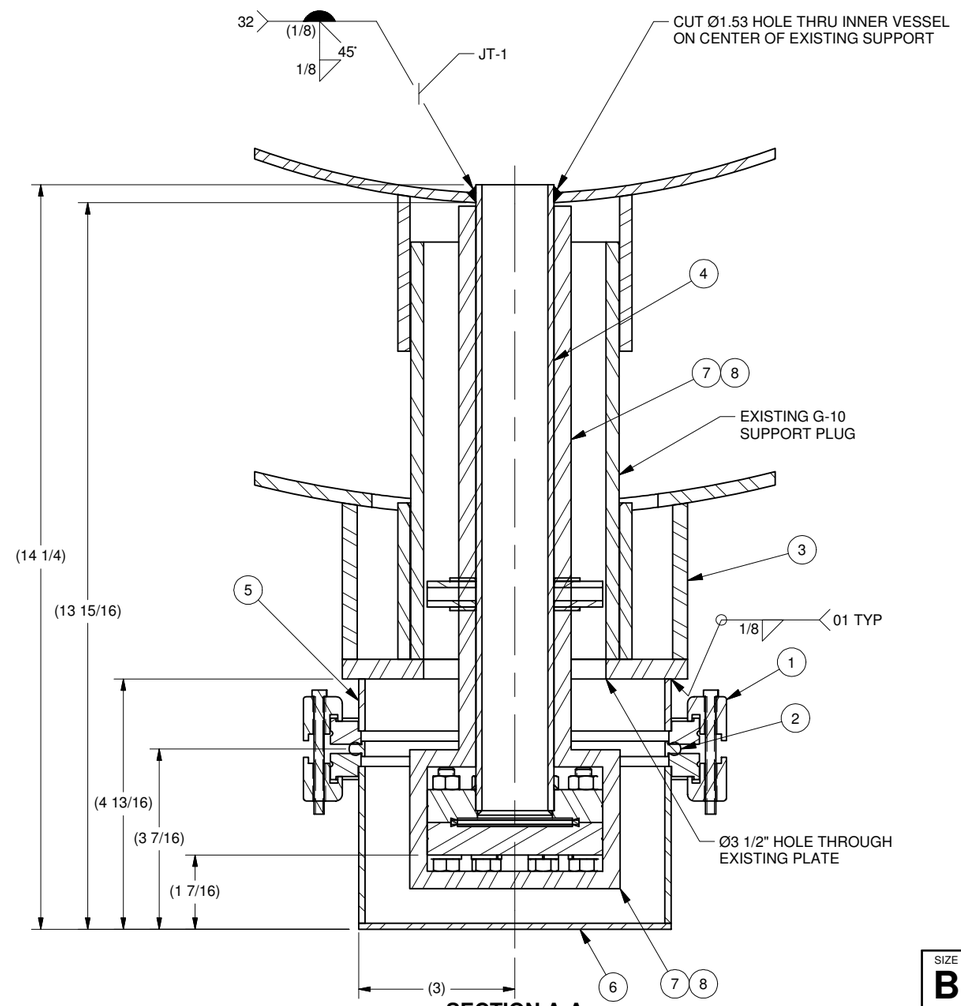

SECTION A-A

SIZE	DRAWING NUMBER	CHG
B	12-4007-6510	A
EST WEIGHT N/A	v3.10.15 11:11:56	SHEET 2 OF 2

-- PHPK TECHNOLOGIES PROPRIETARY --

PARTS LIST

ITEM	QTY	PART NUMBER	DESCRIPTION	TAG NUMBER	MATERIAL	NOTES
1	2.000 in	0700-10-04-00C3	TUBE, 5/8" OD X 16 GA		ASME SA249 WELDED 304	
2	12.000 in	0700-24-08-0018	TUBE, 1-1/2 OD X 0.120 WALL		ASME SA249 TP304/304L	CO3
3	3.752 in	50-028-020	TUBE, 1/2" OD, 0.12 WALL		G-10	
4	8	9000-05-13-0807	BOLT, HEX HEAD, 5/16-18 UNC X 1-3/4" LG		ASME SA193 GR B8	
5	8	9101-05-18-0009	NUT, HEX, 5/16-18 UNC		ASME SA194 GR 8	
6	8	9202-10-10-0889	WASHER, SPLIT LOCK, 5/16 NOM ID		STAINLESS 18-8	
7	1	9911-00-03-00D0	CONFLAT FLANGE, FIXED BLANK, 3-3/8 O.D., KURT J. LESKER #F0337X000N		STAINLESS 304L	
8	1	9911-02-04-04D0	CONFLAT FLANGE, COUNTER BORED FIXED, 3-3/8 O.D. X 1.435" DIA. C'BORE, KURT J. LESKER #F0337X150N		STAINLESS 304L	C03
9	1	9911-10-04-0074	GASKET, 3-3/8 FLANGE, (10 PER PACKAGE), KURT J. LESKER #GA-0337		COPPER OFHC	

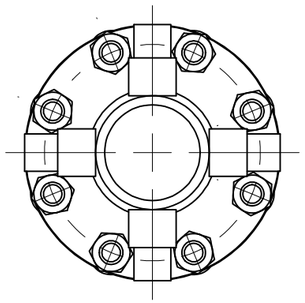

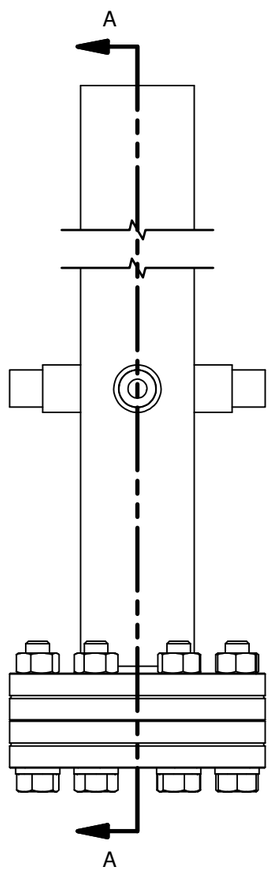

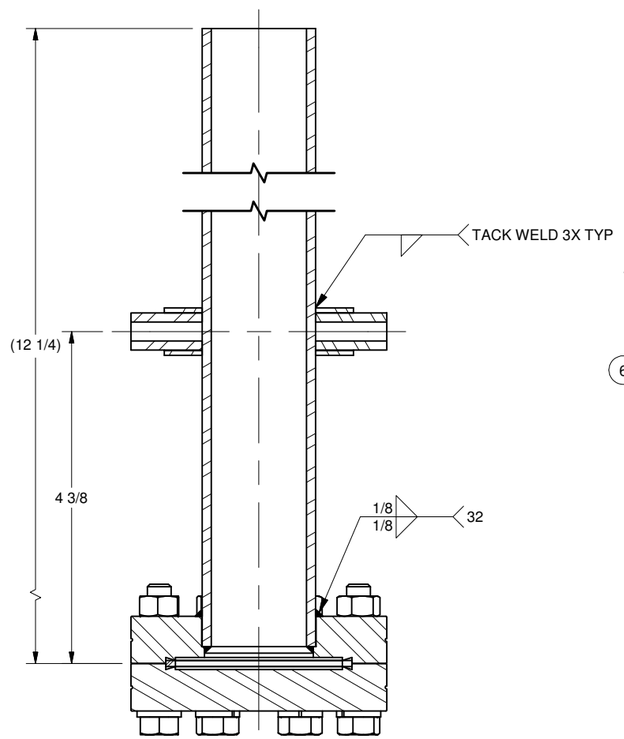

SECTION A-A

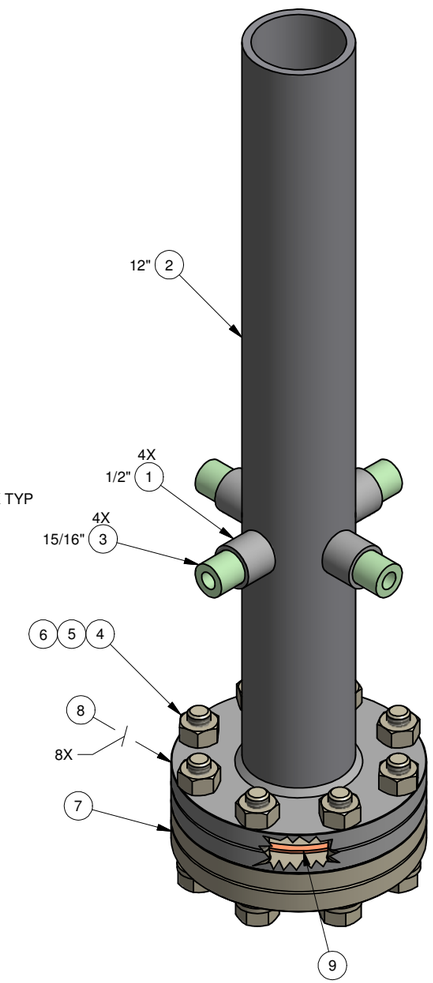

12-4007-6511	1 REQD

WHERE USED

DRAWN BY	DMF	TOLERANCES		PHPK TECHNOLOGIES 2111 BUILDERS PLACE COLUMBUS, OH 43204 614-486-4750 WWW.PHPK.COM
CHECKED	SPW	FRACTION	± 1/8	
ENGINEER	SPW	2 PL .XX	± .01	TITLE YALE LAR CRYOSTAT MODIFICATIONS DRAIN TUBE ASSEMBLY
		3 PL .XXX	± .005	
REVIEWED	MJA	ANGULAR	± 1/2'	
RELEASE DATE	1/22/2013	6185	EDR NO	SIZE B · DRAWING NUMBER 12-4007-6511 · CHG N/C
				EST WEIGHT 5.03 lbmass · v3.10.15 · 12-156 · SHEET 1 OF 1

DIMENSIONS ARE IN INCHES AND PROVIDED PRIOR TO SURFACE TREATMENTS, UNLESS NOTED.

-- PHPK TECHNOLOGIES PROPRIETARY --
INFORMATION ON THIS DRAWING MAY NOT BE DISCLOSED TO ANY PARTY WITHOUT WRITTEN AUTHORIZATION FROM PHPK

NORTH AMERICAN STAINLESS

METALLURGICAL TEST REPORT

NORTH AMERICAN STAINLESS
6870 HIGHWAY 42 EAST
GHENT, KY 41045

Certificate: 25334 1

Customer: 000305.033

Mail To:
PHOENIX METALS COMPANY
4645 PORT ROYAL ROAD
SPRING HILL, TN 37174

Ship To:
PHOENIX METALS COMPANY
4645 PORT ROYAL ROAD
SPRING HILL, TN 37174

Date: 5/16/2007 Page: 1

Steel: 304

Finish: HRAP

Corrosion: ASTM A262/02aE;180Bend-OK

Your Order: 153659

NAS Order: IN 0024098 02

3428

PRODUCT DESCRIPTION:

STAINLESS STEEL COIL, HOT ROLLED, ANNEALED AND PICKLED.
ASTMA240/06b,480/06b,666/03,ASMESA240/04-A05,480/04-A05,SA666/04,
QQS766D-A X MG PERM,AMS5513H X MRK,MIL5059D,AMD3,X CRWN MEAS
Chem only for following: ASTM A276/A312/A479, ASME SA312/SA479

REMARKS:

Mat'l free of Hg contam. No weld repairs. RoHS-Compliant.
EN 10204 3.1 PED 97/23/EC Annex1, Para. 4.3 QQS763F Cond A
NACE MR0 175, NACE MR0 103, EN 10204 3.1.B
* Melted & Manufactured in the USA

Product Id	Coil #	Thickness	Width	Weight	Length	Mark	Pieces	Commodity Code
052DV7 B	052DV7 B	.1811	48.0000	17,400	COIL	4	1	

CHEMICAL ANALYSIS

CM(Country of Melt) ES(Spain) US(United States) ZA(South Africa)

Heat	CM	C	CR	CU	MN	MO	N	NI	P	S	SI
2DV7	US	.055	18.518	.332	1.781	.374	.047	8.244	.029	.001	.286

MECHANICAL PROPERTIES

Product Id#	Coil #	Id Loc	UTS KSI	.2% YS KSI	ELONG %-2"	Hard RB	Tail Hard
052DV7 B	052DV7 B	F T	92.11	47.84	51.61	86.50	88.00

DWG 07-2032-6501 Item 10

11-5-07

QA REVIEW
SP 11-19-07
FHPK

NAS hereby certifies that the analysis on this certification is correct and the material meets the specifications stated.

QC ENGINEER ERIC HESS 5/16/2007

3/4" R 304 HT 2DV7 342R

Original Inner Cryostat Shell
07-2032-6501 Item 10

Rath

RathGibson Janesville LLC
2505 FOSTER AVENUE
JANESVILLE, WISCONSIN 53547-0389 U.S.A.
PHONE 608-754-2222, FAX 608-754-0889

CERTIFIED REPORTS OF TESTS

per EN 10204:3.1

Notified Body TUV Rheinland NA, ISO 9001 2008 Cert. No. 74 100 2835 (DAR), 74 300 2835 (ANAB), PED 01 202 USA/Q-02 0691, AD-WO 01 202 USA/A-00 8473

CUSTOMER ORDER #	C249394/1	SOLD TO TW METALS INC.	SHIP TO TW METALS - CAROL STREAM
PURCHASE ORDER #	M49270193	P O BOX 644	235 TUBEWAY DRIVE
CERTIFICATION DATE	1/30/2012 7:59:52AM	EXTON, PA 19341-0644	CAROL STREAM, IL 60188
SHIP VIA	CUST P/U/COLLECT		

DESCRIPTION	1.500" X 0.120" AVG TP304/TP304L ASME/ASTM SA249/A249/A269/A554	ITEM NUMBER	JT1500108S30403300020
PRODUCT TYPE	WELDED TUBE, BEAD REDUCED, BRIGHT SOLUTION ANNEALED	QUANTITY	3,000 FT
HEAT TREATMENT	1900F (1040C) MIN, QUENCHED IN INERT GAS ATM	NUMBER OF PIECES	150
REVISION DATE	ASME SA249-E10, ASTM A249-10a, A269-10, A554-10	MELT ORIGIN	USA
COMMENTS	Material is FAR BAA, DFARS BAA, FAR TAA compliant.	MELT PRACTICE	EAM / AOD
		MADE IN USA	

CHEMICAL ANALYSIS (WT%)

Heat #	C	Mn	P	S	Si	Cr	Ni	Mo	Cu	Co	N
835886	0.014	1.54	0.033	0.0090	0.39	18.2	8.10	0.44	0.46	0.33	0.07

POSITIVE MATERIAL ID
OK (ASTM E1476)

MECHANICAL TEST(S)

YIELD STRENGTH (0.2% OFFSET)	TENSILE STRENGTH	ELONGATION (% IN 2")	HARDNESS
54900 PSI (379 MPA)	92000 PSI (634 MPA)	56	HRB 86
53900 PSI (372 MPA)	91000 PSI (627 MPA)	56	HRB 86

FLANGE TEST - PASS
FLATTENING TEST - PASS
REVERSE BEND - PASS
FLARE TEST - PASS
REVERSE FLATTENING - PASS
EDDY CURRENT - PASS
DIMENSIONS - PASS

TW METALS TEST REPORTS
JAN 31 2012
ACCEPTED BY

ADDITIONAL TEST(S)

N/A

ATTEST:
RathGibson Janesville LLC does not use mercury, lead, sulfur or any special metal alloy which is liquid at ambient temperature in its product or facility. There are no known detrimental materials in the line marking ink. Weld repair was not used to manufacture this product. RathGibson's stainless steel tubing manufacturing process does not use any of the products targeted in the U.S. Clean Air Act of 1990, and is compliant with the European Community RoHS Directive 2002/95/EC.
We hereby testify that the material described herein has been manufactured, inspected, and tested to be in accordance with the applicable specifications as stated in the "ORDER DATA" portion of this report. Technical inquiries regarding this form should be directed to the Technical Services Group. All other assistance concerning this certification should be directed to the preparer (see below).
For purposes of determining conformance with the specifications, dimensional requirements shall be rounded in accordance with the rounding-off method of ASTM practice E29 as noted in section 6.4.4.

Cert ID: 292958-2012-1-30
MTR8-01 Rev. 7 Rev. Date 06/11/2010

Michael Aston, Quality Assurance Manager, CQE, MR

Peggy Truesdill
Peggy Truesdill-dh, MILL CERTIFICATION

CONSIGNEE Please note - This consignment was turned over to carrier in first class condition being correctly loaded, at which time our responsibility for loss or damage in shipment ceased. For your protection please examine shipment as it arrives. If any shortage or damage is discovered, have a full description made by transportation agent on waybill before signing.

MSDS - Material Safety Data Sheets for this product have been supplied to your Purchasing Department and can also be downloaded from http://www.rathgibson.com. CAUTION: Processing that results in fumes, dust, or solutions may cause lung disease. See Material Safety Data Sheets for Additional Information

SHALL NOT REPRODUCE - This certificate of test results shall not be reproduced, except in full without express written approval of RathGibson Janesville LLC.

0700-24-08-0018

~~0700-24-08-0018~~

PO/SO#	116579	PHPK TECHNOLOGIES
DWG#		
ITEM#		
DATE	4-9-12	QA APPROVAL
DESC.	TUBE 1½" X .120 3MM 304/304L	

2111 Builders Place, Columbus, Ohio 43204 • Office 614-486-4750 • Fax 614-486-4950 • www.phpk.com

Penetrant Inspection Report

Sales Order: 12-4007

Drawing Number: 12-4007-6510

Description: Yale Lar Cryostat (MOD 1)

Test Performed By: S. Thomas

Project Engineer: S. Willming

PHPK Procedure Specification: QUAL-PR-0007

Penetrant type: Visible Dye: X

Penetrant: Magnaflux SKL-SP Batch No: 05H05K

Cleaner: Magnaflux SKC-S Batch No: 10M07K

Developer: Magnaflux SKD-S2 Batch No: 10C08K

Lighting: Work Light / Flashlight (as needed 100 foot candles minimum)

Conclusions: Note joint number and bill of material item number (description) below. Also list type of indication (liner or rounded) and location & size if any are observed.

J-1 BOM #4 to Inner Vessel (drain tube assembly to inner vessel)

No Recordable Indications To Report

Signature

3/4/14

Date

Section IV

Inner Head

12-4007-0502 (MOD 2)

- Material & Weld Traceability Record, 6522
  - Drawing, 6522

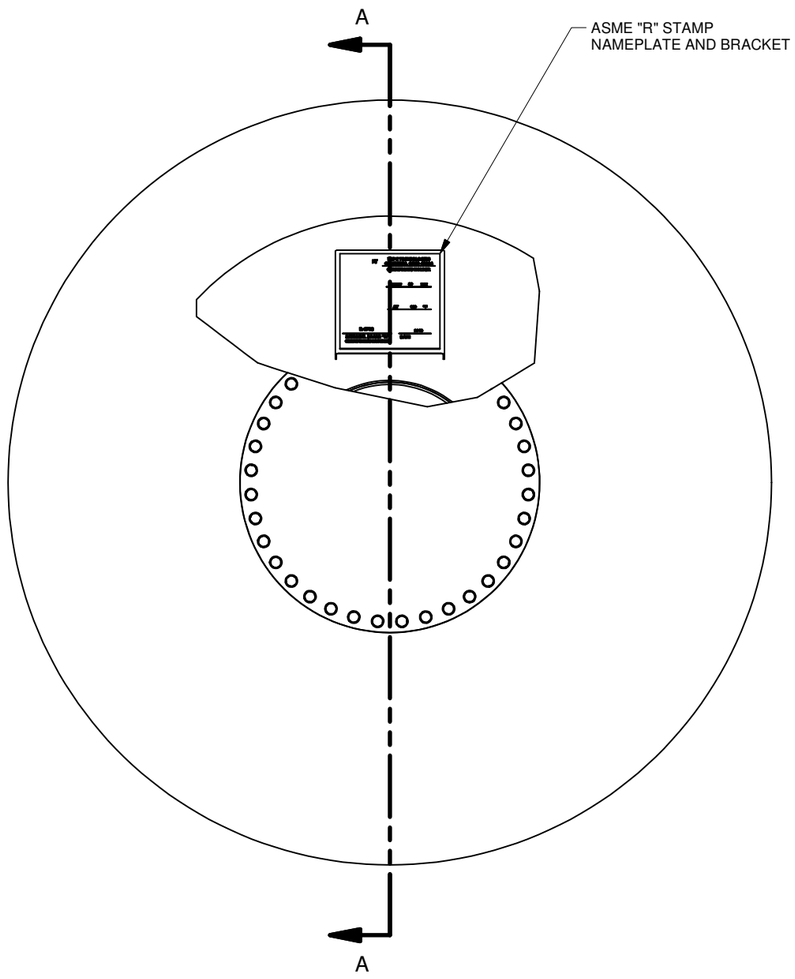

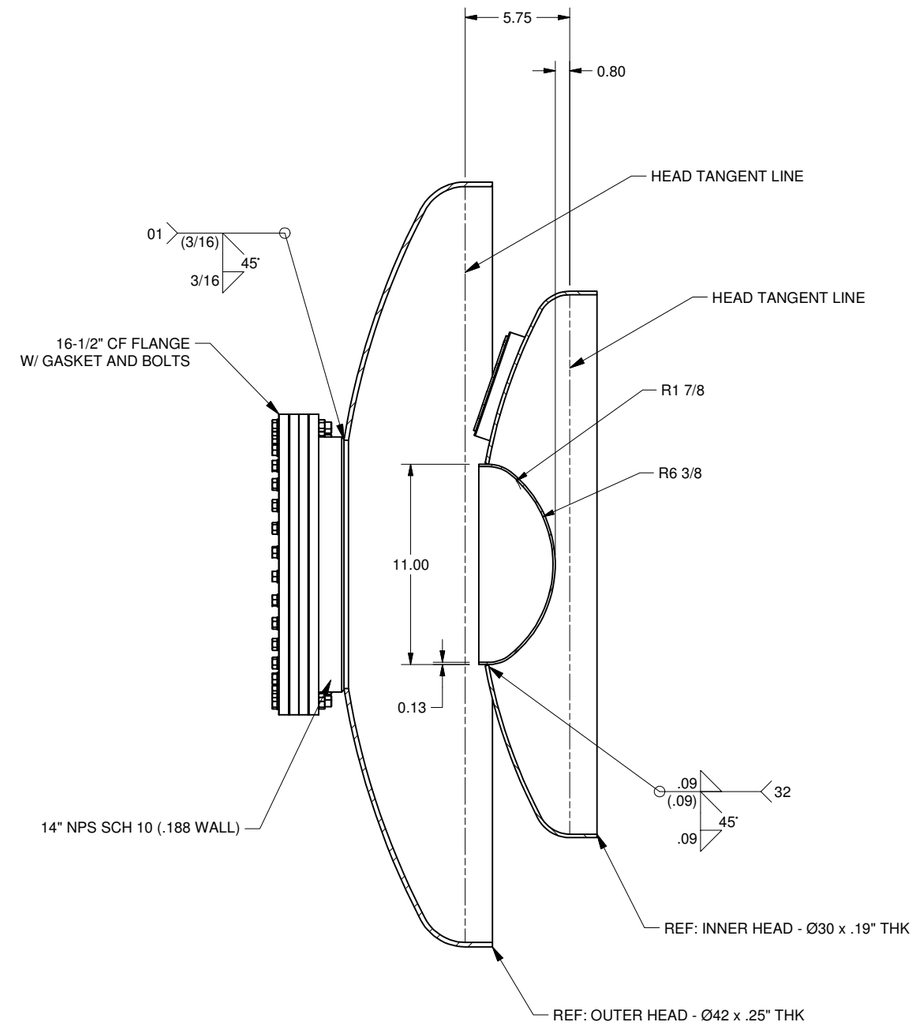

SECTION A-A

GENERAL NOTES:

1) THIS DRAWING REPRESENTS MODIFICATION NUMBER 2 TO BE PERFORMED ON THE INNER AND OUTER VESSEL OF THE LIQUID ARGON CRYOSTAT SUPPLIED TO YALE ON PHPK SALES ORDER 07-2032.

2) THE MODIFICATION TO THE INNER VESSEL WILL BE INCLUDED IN A DESIGN REPORT DOSSIER AND REVIEWED BY AN AUTHORIZED INSPECTOR IN ACCORDANCE WITH THE NATIONAL BOARD INSPECTION CODE FOR APPLICATION OF "R" STAMP.

3) SEE DOCUMENT NUMBER 12-4007-9910 FOR ASME CODE CALCULATIONS FOR THE INNER VESSEL.

4) SEE DOCUMENT NUMBER 12-4007-9911 FOR ASME CODE CALCULATIONS FOR THE OUTER VESSEL.

-- PHPK TECHNOLOGIES PROPRIETARY --
INFORMATION ON THIS DRAWING MAY NOT BE DISCLOSED TO ANY PARTY WITHOUT WRITTEN AUTHORIZATION FROM PHPK

WHERE USED					
DRAWN BY	SPW	TOLERANCES		PHPK TECHNOLOGIES	2111 BUILDERS PLACE COLUMBUS, OH 43204 614-486-4750 WWW.PHPK.COM
CHECKED	MJA	FRACTION	± 1/8		
ENGINEER	SPW	2 PL .XX	± .01	TITLE	YALE LAR CRYOSTAT MODIFICATIONS MOD 2 - GENERAL ARRANGEMENT
		3 PL .XXX	± .005		
REVIEWED	MJA	ANGULAR	± 1/2˚		
RELEASE DATE	12/21/2012	6142 EDR NO		SIZE B	DRAWING NUMBER 12-4007-0502 CHG N/C
DIMENSIONS ARE IN INCHES AND PROVIDED PRIOR TO SURFACE TREATMENTS, UNLESS NOTED.				EST WEIGHT N/A	v3.10.15 177156 SHEET 1 OF 1

PHPK TECHNOLOGIES	**Material & Weld Traceability Record**	12-4004-MWTR-6522
	PHPK Form QA-FO-0011	File Name

Drawing Number		Next Assembly Number	
Dwg #	Rev Ltr	Dwg #	Rev Ltr
12-4007-6522	B	12-4007-6521	N/C

Inner Head Weldment	**Modification 2**	
Work Ticket Number	Serial Number	Date Assembled
4007008	***R8***	3/8/2013

Put the heat number or serial number on the completed assembly with a permanent marker.

Parts & Subassemblies

Item	Part Number *(Dwg No - Item No)*	Heat Number *(Enter here or below)*	Description
2	07-2032-6500	451657	Cryostat Inner Head
3	*4007	E3T5	Cryostat Inner Head Custom Inverted
4	70-001-050	3HR6	ASME R Nameplate Bracket

Raw Material & Welding

Joint ID No	Items Joined		Item Heat Numbers		Weld Filler Metal Heat Number	Welder ID No.
	A	*B*	*A*	*B*		
JT-2	*2*	*3*	*451657*	*E3T5*	*118442*	*P-15*
JT-3	*2*	*4*	*451657*	*3HR6*	*118442*	*P-15*

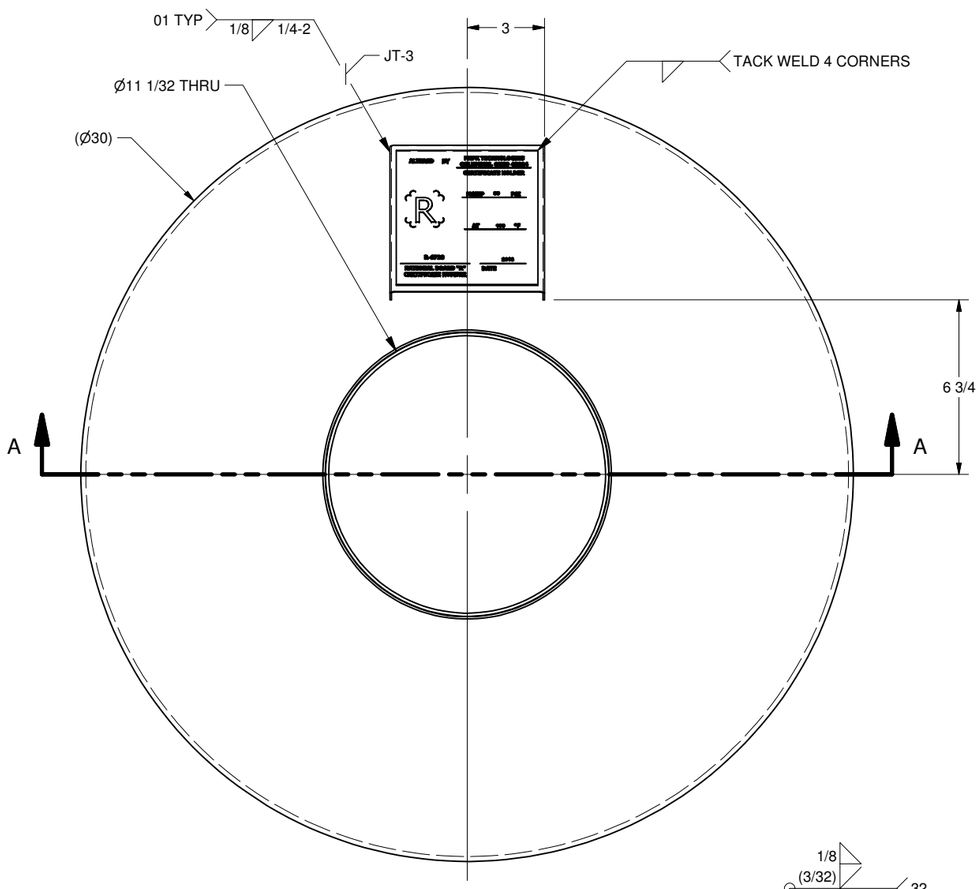

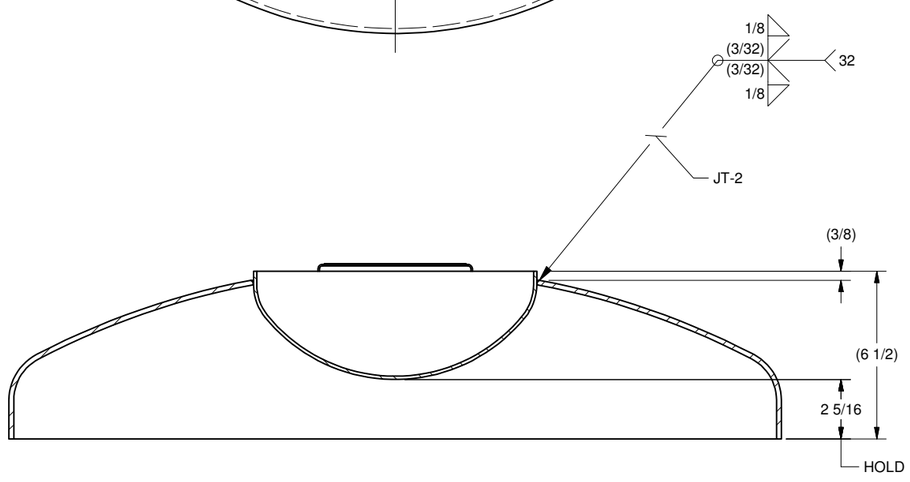

SECTION A-A

PARTS LIST

ITEM	QTY	PART NUMBER	DESCRIPTION	TAG NUMBER	MATERIAL	NOTES
1	1	02-001-061	ASME "R" STAMP NAMEPLATE		ASME SA240 304	
2	1	07-2032-6500	CRYOSTAT INNER HEAD		ASME SA240 304	
3	1	12-4007-6524	CRYOSTAT INNER HEAD CUSTOM INVERTED HEAD		ASME SA240 304	PPR-4007-01
4	1	70-001-050	ASME CODE NAMEPLATE BRACKET		ASME SA240 304	

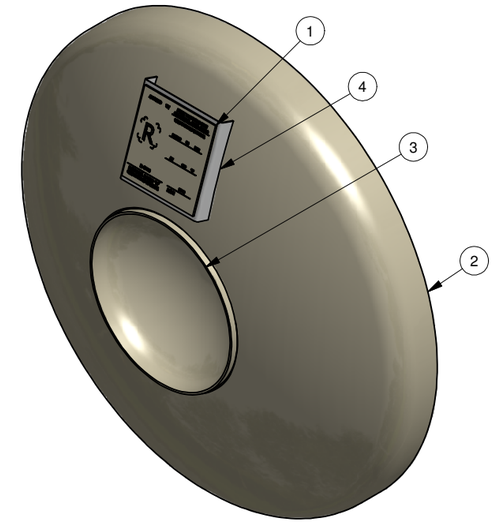

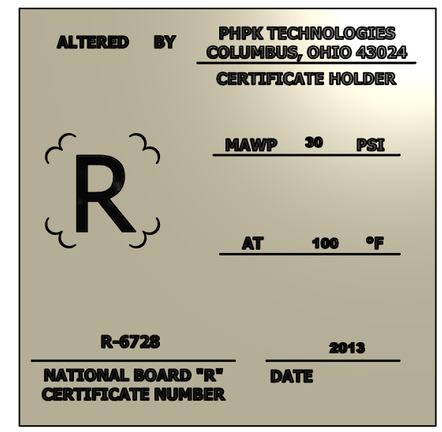

REVISIONS

REV	DATE	DWN	CHK'D	ENG'R	RVW'D	EDR	DESCRIPTION
A	02-21-2013	DMF	SPW	SPW	MJA	6266	ADDED ENLARGED VIEW OF "R" STAMP NAMEPLATE
B	02-27-2013	DMF	SPW	SPW	MJA	6289	REVISED WELD SYMBOL

12-4007-6521 1 REQD

WHERE USED

DRAWN BY	DMF	TOLERANCES	
CHECKED	SPW	FRACTION	± 1/8
ENGINEER	SPW	2 PL .XX	± .01
		3 PL .XXX	± .005
REVIEWED	MJA	ANGULAR	± 1/2˚
RELEASE DATE	1/22/2013	6185	EDR NO

DIMENSIONS ARE IN INCHES AND PROVIDED PRIOR TO SURFACE TREATMENTS, UNLESS NOTED.

PHPK TECHNOLOGIES
2111 BUILDERS PLACE
COLUMBUS, OH 43204
614-486-4750 WWW.PHPK.COM

TITLE YALE LAR CRYOSTAT MODIFICATIONS INNER HEAD WELDMENT

SIZE B | DRAWING NUMBER 12-4007-6522 | CHG B

EST WEIGHT N/A | v3.10.15 19:56 | SHEET 1 OF 2

-- PHPK TECHNOLOGIES PROPRIETARY --
INFORMATION ON THIS DRAWING MAY NOT BE DISCLOSED TO ANY PARTY WITHOUT WRITTEN AUTHORIZATION FROM PHPK

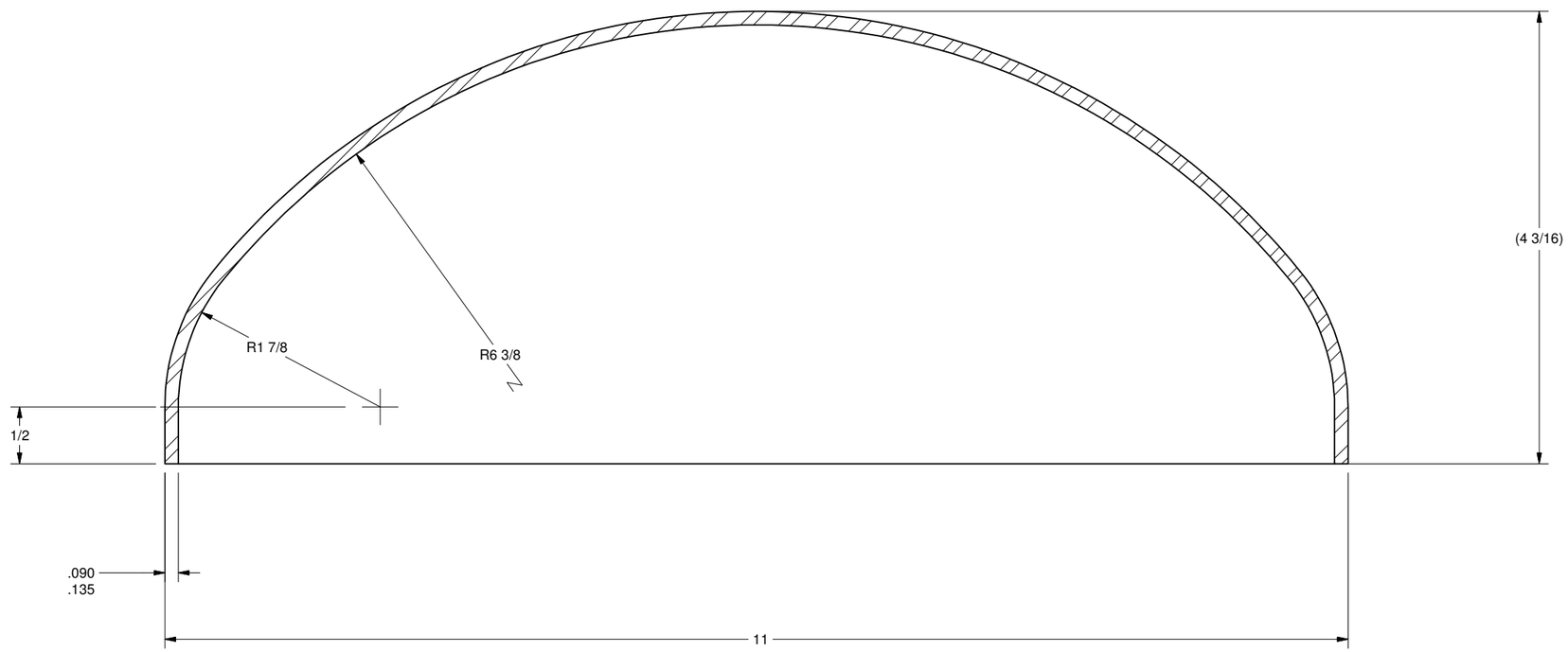

SECTION VIEW OF HEAD

SIZE	DRAWING NUMBER	CHG
B	12-4007-6522	B
EST WEIGHT 5.748 lbmass	v3.10.15 120156	SHEET 2 OF 2

SO# 271262 SO LINE# 1
Customer PO # 073353 Pc. Count 2
Tag # Job #

****
* CERTIFICATION *
****

3/16" x 72" x Coil
T304 / 304L
Ht# 451657-002

OUTO KUMPU

Outokumpu Stainless Coil, Inc.
426 North Martingale Road
Suite 2000
Schaumburg, IL 60173-2218
Tel (847) 517-4050
Tel (800) 833-8703
Fax (847) 517-2950
Fax (800) 545-8817
www.outokumpu.com/stainless/nad

TO:
METALS, INC.
Branch #9106
P. O. BOX 571300
TULSA OK 74157

HEAT 451657-002 ORDER 0606586/001 SON 1267438 B00000000 TAG 0028474 9/02/05

YOUR ORDER & DATE

30302 0/00/00 CUST# METALS01 CUST TAG#

ITEM DESCRIPTION

GRADE 304L/304
Size 304L HRAP .1875 X 72 X COIL
Ship Condition A

Country of Melt : SWE
Country of Mfg. : SWE

Total Bundles 1 Total Weight 23501

SPECIFICATIONS

ASTM A262-98 PRAC E
ASME SA480-00ED 00 ADDENDA
AMS 5513G EXCEPT LINE MARK
MIL-S-5059D WITH EXCEPTIONS
ASTM A240-00
ASTM A666-00

ASME SA240-00ED 00 ADDENDA
AMS 5511G EXCEPT LINE MARK
MIL-S-4043B EX MO, CU=.75 MAX
QQ-S-766D AMEND III EX.P4.5.2
ASTM A480-99B

MECHANICAL & OTHER TESTS

Test Condition A

		Hardness as tested	HB	167
		Hardness as tested	HB	163
		Tensile strength,KSI (MPa)		90.0 (621)
Micro	NA	Yield strength,KSI (MPa)		45.0 (310)
Intergranular corrosion	OK	Elongation % in 4D		50.0
Macro	OK	Reduction of area %		.0

CHEMICAL COMPOSITION

Carbon	(C)	.021	Manganese	(Mn)	1.650
Phosphorus	(P)	.028	Sulphur	(S)	.001
Silicon	(Si)	.320	Chromium	(Cr)	18.220
Nickel	(Ni)	8.280	Cobalt	(Co)	.180
Copper	(Cu)	.360	Moly	(Mo)	.400
Nitrogen	(N)	.070			
Iron	(Fe)	Balance			

Melt Practice
Refining Practice

We hereby certify that the material herein has been made and tested in accordance with the listed specification(s) and that the results of all tests are acceptable.

Free of known mercury contamination

QA REVIEW
SP 11-19-07
HPK

Quality Manager
Authorized Signature Chuck Turack

INNER HEAD

07-2032-6501 IT'S 1 & 5

Charles A. Turack

PO. 106047
WO 2032
HD 30 X 3/16 ODPR
HD 30 X 3/16 IDPR

NAS NORTH AMERICAN STAINLESS

METALLURGICAL TEST REPORT

6870 Highway 42 East
Ghent, KY 41045-9615
(502) 347-6000

Certificate: 784211 04

Customer: 0570 013

Mail To:
ALRO METALS SERVICE CENTER
ALRO GROUP
P.O. BOX 927
JACKSON, MI 49204-0927

Ship To:
ALRO METALS SERVICE CENTER
CUSTOMER PICKUP
5620 CHURCHMAN AVENUE
INDIANAPOLIS, IN 46203

Date: 11/05/2012 Page: 1

Steel: 304

Finish: 2B

Your Order: 8632149 NAS Order: AN 0540809 01 Corrosion: ASTM A262/02aE;180Bend-OK

PRODUCT DESCRIPTION:

STNLESS STEEL SHEET, C.R., ANNEALED & PICKLED; UNS30400
ASTM A240/11b,A480/11b,A666/10;ASME SA240/11a,SA480/11a,SA666/11a
CHEM ONLY ON FOLLOWING ASTM: A276/10,A479/11,A484/11,A312/11
CHEM ONLY ON FOLLOWING ASME: SA312/11,SA479/11
AMS 5513J XMRK; MIL-S-5059D AMEND3 (X CROWN MEAS)
NACE MR0175/ISO 15156-3:2003 A, MR0103/07;QQS766D-A X MAG PERM
MIN. SOLUTION ANNEAL TEMP 1900F, WATER QUENCHED

REMARKS:

Mat'l is Free of Mercury Contamination. No weld repairs.
EN 10204:2004 3.1; RoHS Compliant
Material is Free of Radioactive Contamination
NAS Steel Making Process: EAF, AOD, & Cont. Casting
Product Mfg.by a Quality Mgt.Sys. in Conf. w/ISO 9001
*Melted & Manufactured in the USA; Mat'l is DFARs Compliant

Product ID #	Coil #	Thickness	Width	Weight	--------Length-------		Mark	Pieces	EDP #
DD0907	* 03E3T5 D	.1200	36.0000	4,960	SHEET	96.000	11	42	14816540

CHEMICAL ANALYSIS

CM(Country of Melt) ES(Spain) US(United States) ZA(South Africa) JP(Japan)

Chemical analysis per ASTM A751/08

HEAT	CM	C %	CR %	CU %	MN %	MO %	N %	NI %	P %	S %
E3T5	US	.0452	18.3390	.4035	1.6420	.3010	.0593	8.0015	.0310	.0010

SI %
.3205

ALRO STEEL/METAL
RT06756757

MECHANICAL PROPERTIES

Product ID #	Coil #	loc	dir	UTS KSI	.2% YS KSI	ELONG %-2"	Hard RB	Tail Hard
DD0907	03E3T5 D	F	T	95.92	50.21	51.54	88.00	87.50

ALRO STEEL CORP.
INDIANAPOLIS
NOV 6 2012
RECEIVED
SUBJECT TO COURT INSP.

PO/SO#	118794 / 4007
DWG#	4007-PPR 01 01
ITEM#	
DATE	2-2243
DESCRIP'D	HSAO 11"00 x 1063

PHPK TECHNOLOGIES
QA APPROVAL KB

Place

NAS hereby certifies that the analysis on this certification is correct. Based upon the results and the accuracy of the test methods used, the material meets the specifications stated. These results relate only to the items tested and this report cannot be reproduced, except in its entirety, without the written approval of NAS.

Technical Dept. Mgr. ERIC HESS 11/05/2012

161578
292

NORTH AMERICAN STAINLESS

METALLURGICAL TEST REPORT

6870 Highway 42 East
Ghent, KY 41045-9615
(502) 347-6000

Certificate: 383578 01

Customer: 2830 009

Mail To:
ROLLED ALLOYS
9944 PRINCETON-GLENDALE RD.
CINCINNATI, OH 45246

Ship To:
ROLLED ALLOYS
9944 PRINCETON-GLENDALE RD.
CINCINNATI, OH 45246

Date: 1/18/2008 Page: 2

Steel: 304

Finish: 2B

Corrosion: ASTM A262/02aE;180Bend-OK

Your Order: C24144 NAS Order: AN 0383356 01

PRODUCT DESCRIPTION:

STAINLESS STEEL COIL, COLD ROLLED, ANNEALED AND PICKLED.
ASTMA240/07,480/06b,666/03,ASMESA240/04-A05,480/04-A05,SA666/04
QQS766D-A XMGPRM,AMS5511H/5513H XMRK&FN,MIL40438,AMD3,XCRNMKAS&FN
UNS S30403 / UNS S30400

REMARKS:

Mat'l Free of Mercury Contamination. No weld repairs.
EN 10204 3.1; QQS763F Cond A; RoHS Compliant
* Melted & Manufactured in the USA
Min Anneal Temp 1950F, Water Quench; AOD Melt Practice
EN 10204 3.1.B/DIN 50049; NACE MR0175/2001

ROLLED ALLOYS QUALITY ASSURANCE
APPROVED
DATE 6/30/08

Product ID #	Coil #	Thickness	Width	Weight	--------Length-------		Mark	Pieces
033HR6 D	* 033HR6 D	.0600	48.0000	6,970	COYL	738.40	11	1

CHEMICAL ANALYSIS

CM(Country of Melt) ES(Spain) US(United States) ZA(South Africa)

HEAT	CM	C	CO	CR	CU	MN	MO	N	NI	P
3HR6	US	.0219	.1669	18.4198	.4135	1.7031	.3487	.0801	8.2023	.0331
		S	SI							
		.0017	.3509							

MECHANICAL PROPERTIES

Product ID #	Coil #	Coil	Dir	UTS KSI	.2% YS KSI	ELONG %-2"	Hard RB	Tail Hard
033HR6 D	033HR6	F	T	99.97	58.30	41.65	91.00	89.00

NAS hereby certifies that the analysis on this certification is correct and the material meets the specifications stated.

QC ENGINEER ERIC HESS 6/30/2008

PO 107360
P/N 70-001-050
Nameplate Bracket

QA REVIEW
TB
PHPK TECHNOLOGIES

Section V

Inner Nozzle Flange

12-4007-0503 (MOD 3)

- Material & Weld Traceability Record, 6533
  - Drawing, 6533
- Material & Weld Traceability Record, 6534
  - Drawings, 6534,6535
- Form U-2A

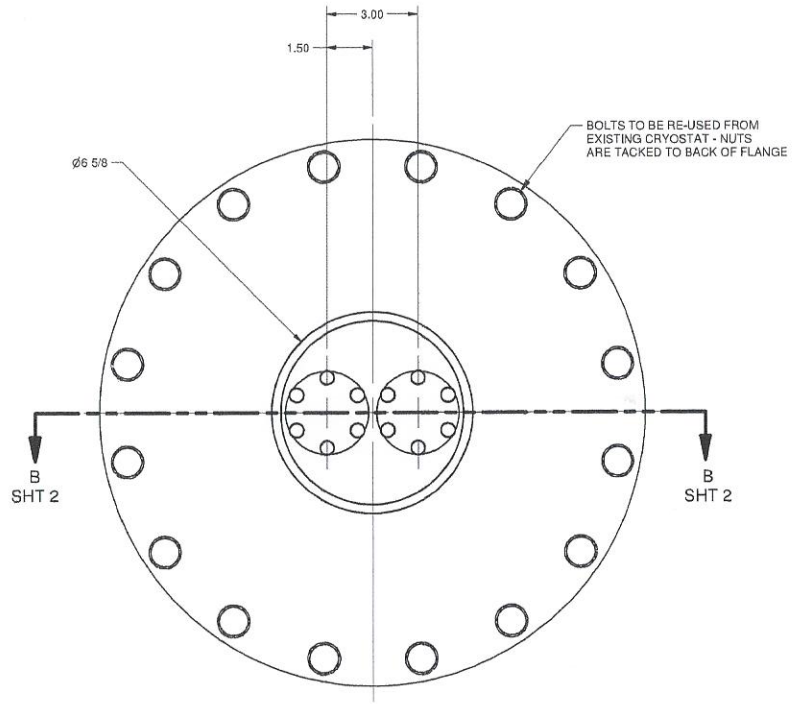

SCINTILLATION CONNECTION PORT - OUTER FLANGE VIEW

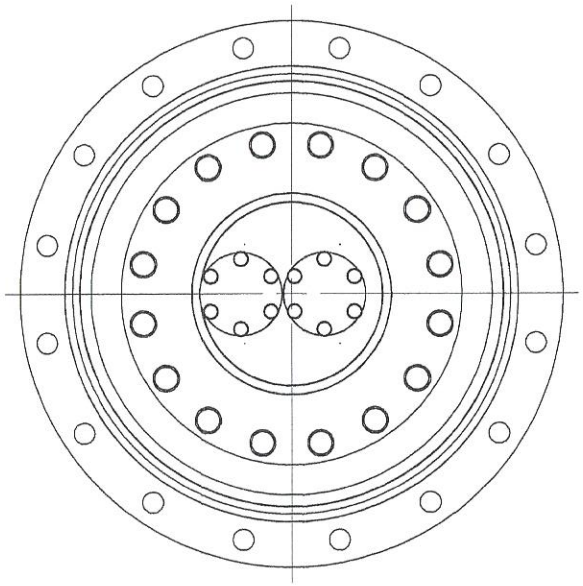

SCINTILLATION CONNECTION PORT - INNER FLANGE VIEW

* Fabricated and stamped as a U-Part NB 66

GENERAL NOTES:

1) THIS DRAWING REPRESENTS MODIFICATION NUMBER 3 TO BE PERFORMED ON THE INNER AND OUTER VESSEL OF THE LIQUID ARGON CRYOSTAT SUPPLIED TO YALE ON PHPK SALES ORDER 07-2032.

2) THE MODIFICATION TO THE INNER VESSEL WILL BE INCLUDED IN A DESIGN REPORT DOSSIER AND REVIEWED BY AN AUTHORIZED INSPECTOR IN ACCORDANCE WITH THE NATIONAL BOARD INSPECTION CODE FOR APPLICATION OF "R" STAMP.

3) SEE DOCUMENT NUMBER 12-4007-9910 FOR ASME CODE CALCULATIONS FOR THE INNER VESSEL.

4) SEE DOCUMENT NUMBER 12-4007-9911 FOR ASME CODE CALCULATIONS FOR THE OUTER VESSEL.

REVISIONS

REV	DATE	DWN	CHK'D	ENG'R	RV'WD	EDR	DESCRIPTION
A	12-19-2012	SPW	MJA	SPW	MJA	6140	REVISED MIN THK OF SCINTILLATION FLANGE FROM .50" TO .79"

-- PHPK TECHNOLOGIES PROPRIETARY --
INFORMATION ON THIS DRAWING MAY NOT BE DISCLOSED TO ANY PARTY WITHOUT WRITTEN AUTHORIZATION FROM PHPK

WHERE USED

DRAWN BY	SPW	TOLERANCES		PHPK TECHNOLOGIES 2111 BUILDERS PLACE COLUMBUS, OH 43204 614-486-4750 WWW.PHPK.COM
CHECKED	MJA	FRACTION	± 1/8	
ENGINEER	SPW	2 PL .XX	± .01	TITLE YALE LAR CRYOSTAT MODIFICATIONS MOD 3 - GENERAL ARRANGEMENT
		3 PL .XXX	± .005	
REVIEWED	MJA	ANGULAR	± 1/2°	
RELEASE DATE	12/19/2012	6137 EDR NO		SIZE B DRAWING NUMBER 12-4007-0503 CHG A
DIMENSIONS ARE IN INCHES AND PROVIDED PRIOR TO SURFACE TREATMENTS, UNLESS NOTED.				EST WEIGHT N/A SHEET 1 OF 2

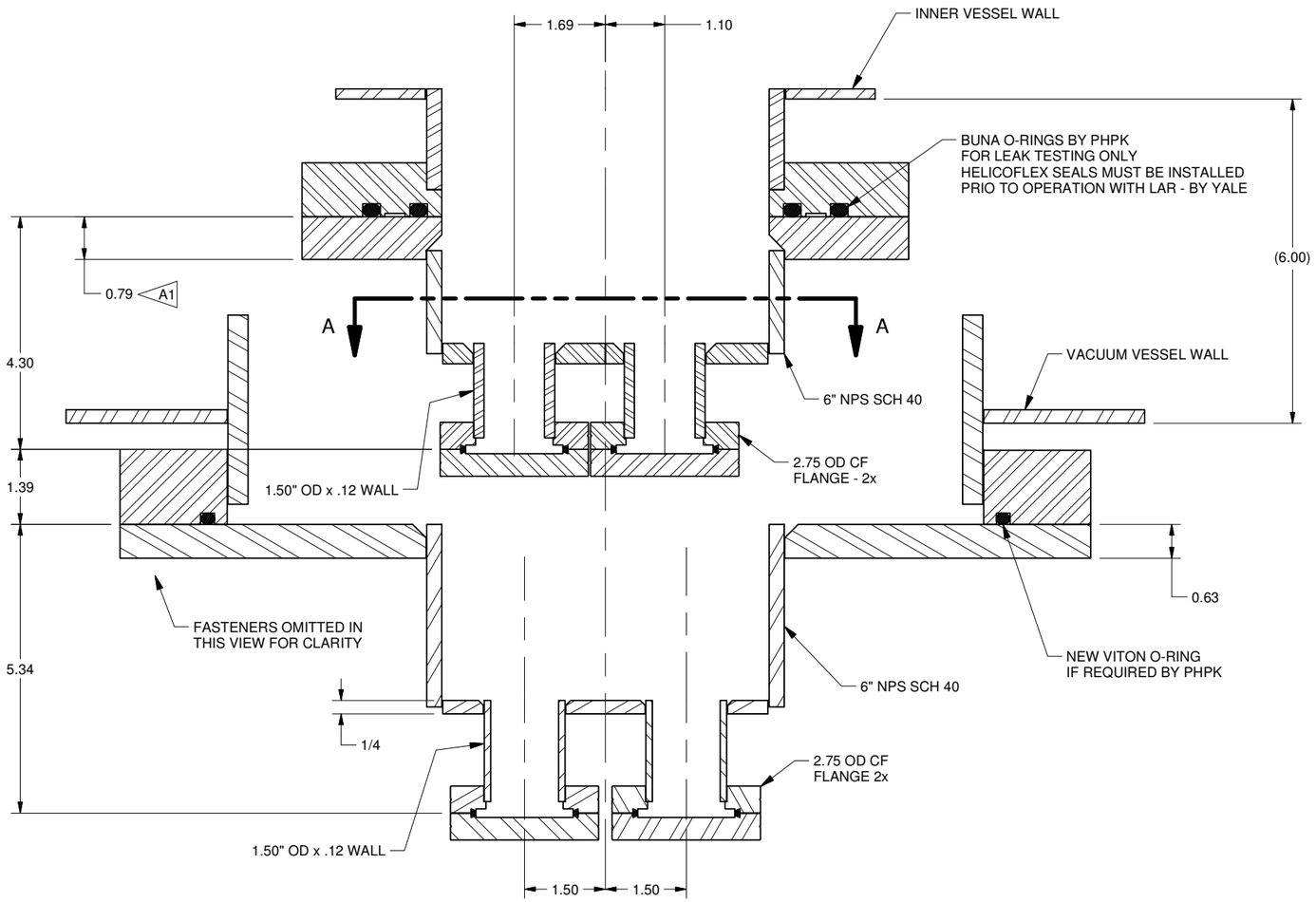

SECTION B-B
FROM SHT 1

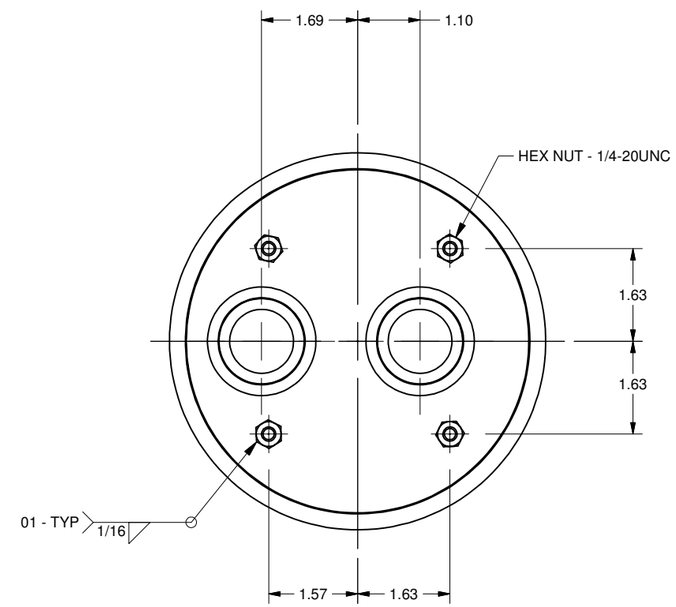

SECTION A-A

SIZE	DRAWING NUMBER	CHG
B	12-4007-0503	A
EST WEIGHT N/A	v3.10.15 126156	SHEET 2 OF 2

PHPK TECHNOLOGIES	**Material & Weld Traceability Record**	12-4004-MWTR-6533
	PHPK Form QA-FO-0011	File Name

Drawing Number		Next Assembly Number	
Dwg #	Rev Ltr	Dwg #	Rev Ltr
12-4007-6533	N/C	12-4007-6532	N/C

Inner Nozzle Flange	**Modification 3**	
Work Ticket Number	Serial Number	Date Assembled
4007011	***R8***	3/1/2013

Put the heat number or serial number on the completed assembly with a permanent marker.

Parts & Subassemblies

Item	Part Number *(Dwg No - Item No)*	Heat Number *(Enter here or below)*	Description
1	*4007	2600791	Plate, 1" THK, 11-1/4" OD
2	07-07-0088	TU-YU239958	Pipe, 6" NPS SCH 40
3	12-4007-6534	SEE MWTR 6534	Inner Nozzle Plate 02 W1
4			
5			
6			
7			
9			
10			
11			
16			
26			

Raw Material & Welding

Joint ID No	Items Joined		Item Heat Numbers		Weld Filler Metal Heat Number	Welder ID No.
	A	*B*	*A*	*B*		
JT-5	*2*	*3*	*TU-YU239958*	*SEE MWTR 6534*	*118442*	*P-15*
JT-6	*1*	*2*	*2600791*	*TU-YU239958*	*118442*	*P-15*

-- PHPK TECHNOLOGIES PROPRIETARY --

PARTS LIST

ITEM	QTY	PART NUMBER	DESCRIPTION	TAG NUMBER	MATERIAL	NOTES
1	1	*4007	PLATE, 1" THK, 11 1/4" OD		ASME SA240 304	C03
2	1.910 in	07-07-0088	PIPE, 6 NPS, SCH 40		ASME SA312 ERW 304/304L	CO3
3	1	12-4007-6534	INNER NOZZLE PLATE 02 W1			

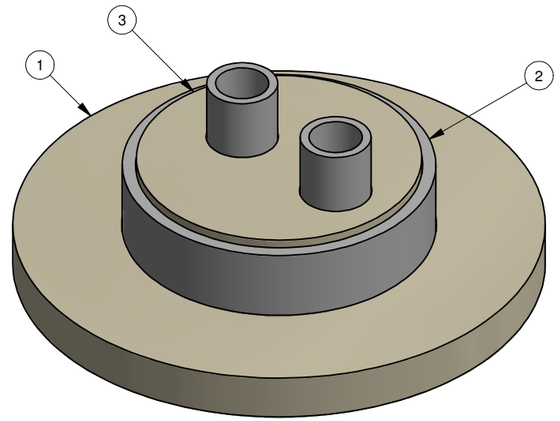

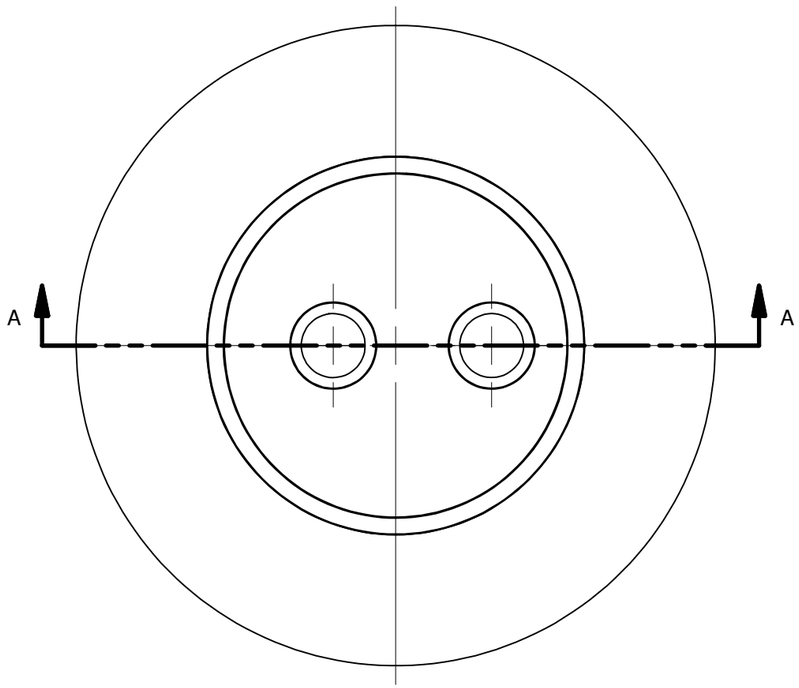

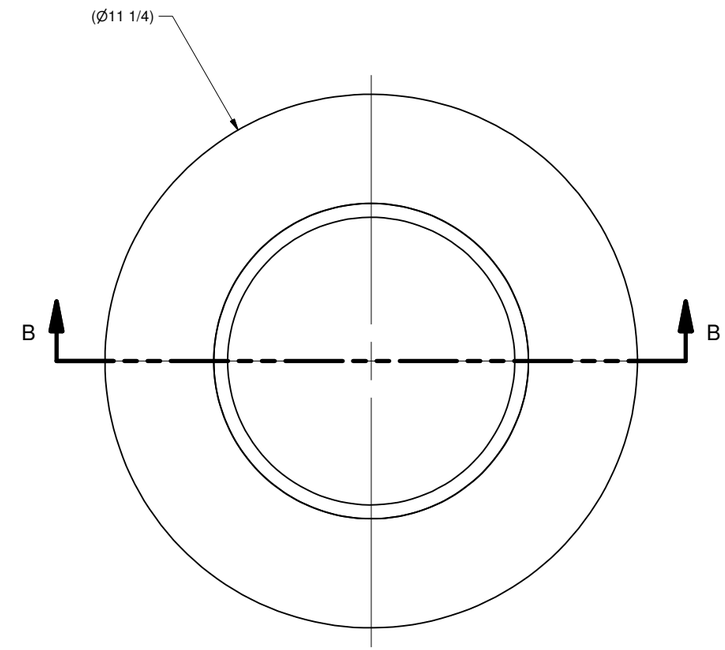

DETAIL ITEM #1
1 REQ'D.

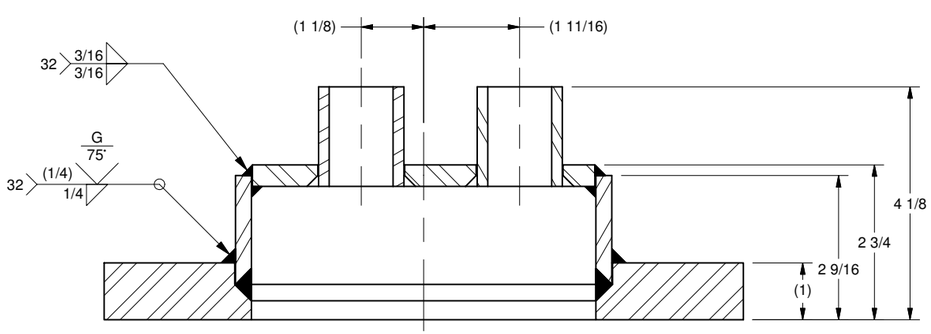

SECTION A-A

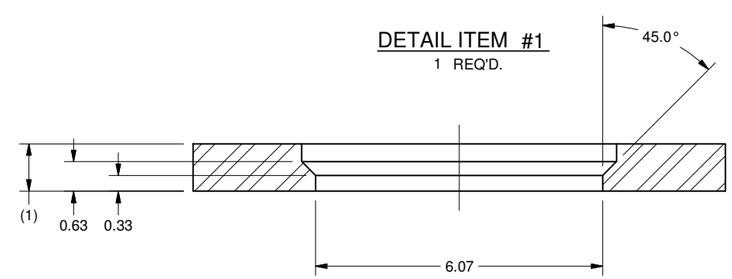

SECTION B-B

12-4007-6532 1 REQD

WHERE USED

DRAWN BY	DMF	TOLERANCES	
CHECKED	SPW	FRACTION	± 1/8
ENGINEER	SPW	2 PL .XX	± .01
		3 PL .XXX	± .005
REVIEWED	MJA	ANGULAR	± 1/2'
RELEASE DATE	1/22/2013	6185	EDR NO

PHPK TECHNOLOGIES
2111 BUILDERS PLACE
COLUMBUS, OH 43204
614-486-4750 WWW.PHPK.COM

TITLE
YALE LAR CRYOSTAT MODIFICATIONS
INNER NOZZLE FLANGE WELDMENT

SIZE B | DRAWING NUMBER 12-4007-6533 | CHG N/C

EST WEIGHT 26.12 lbmass | v3.10.15 | SHEET 1 OF 1

DIMENSIONS ARE IN INCHES AND PROVIDED PRIOR TO SURFACE TREATMENTS, UNLESS NOTED.

-- PHPK TECHNOLOGIES PROPRIETARY --
INFORMATION ON THIS DRAWING MAY NOT BE DISCLOSED TO ANY PARTY WITHOUT WRITTEN AUTHORIZATION FROM PHPK

MILL TEST REPORT **TA CHEN INTERNATIONAL, INC.** This MTR contains 1 page (Page# 1

Customer: JACRAC PO#:5819 SO#:CCH782 **MTR#:AECL1382195.GI**

Item:1.00060240304L#1 Bundle:260079I063 Heat#:260079I

Pág. 1/1

Aperam Inox América do Sul S.A.

aperam

Head Office: Av. Carandaí, nº 1115, 23º Andar - Centro - Belo Horizonte - MG - 30130-915 - Brazil
Plant: Praça 1º de Maio, nº 9 - Centro - Timóteo - MG - 35180-018 - Brazil
Branches: Av. Mercedes Benz, nº 1.420 - Distrito Industrial - Campinas - SP - 13054-750 - Brazil
Rodovia RSC-453, Km 2,2 - S/N - Distrito Industrial - Caxias do Sul - RS - 95110-690 - Brazil

QUALITY CERTIFICATE

Number: 1382195
APERAM Order: 72088204
Date: 15/10/2012
Invoice: 2544E12

Customer:
ARCELORMITTAL-STAINLESS INTL USA, L
98 FLORAL AVE
NEW PROVIDENCE NJ 07974
EUA
P.O.NR.: 789529 / L37091-S

Ship to:
TA CHEN INTERNATIONAL INC
5855 ODISPO AVENUE
LONG BEACH, CA
EUA

Steel grade: AISI 304L **Finish:** NR1- HOT ROLLED **Product:** PLATE
Dimensions: 25,40 mm x 1524 mm x 6096 mm - 1,000 in x 60,00 in x 240 i
Marks:

Chemical composition

Heat nr.	C %	Mn %	Si %	P %	S %	Cr %	Ni %	Mo %	Al %	Co %	Cu %	N PPM				
260079I	0,017	1,29	0,470	0,034	0,002	18,26	8,03	0,084	0,0014	0,150	0,1914	450				

Results

Test/Variable	U.M:	260079I063											
	Source:	260079I06											
		H	T	H	T	H	T	H	T	H	T	H	T
Tensile Strength	KSI		93,84										
Yield Strength 0.2%	KSI		48,15										
Elongation 2"	%		53,00										
Austenit Grain Size			07/06										
Hardness RB	HRB	87,90	87,90										
Oxalic Test		DUAL	0										
Net Weight	LB	8.2780											
Gross Weight	LB	8.4760											

Heat & Lot identification (U.M.): Ok
Surface quality / dimensions: Ok
Heat treatment: Minimun Solution anneal temp.1900 F

Standards:
ASME SA480/SA480M 10
DIN 50049 92
ASME SA240/SA240M 10
NACE MR0103 03
SAE AMS 5513H 04
ASTM A240/A240M 10B
DIN EN 10204-3.1 05
SAE AMS 5511H 03 07
ASTM A480/A480M 11B
ANSI/NAC MR0175 (ISO) 09

Remarks: MADE IN BRAZIL /// COUNTRY OF ORIGIN: "BRAZIL" /// COUNTRY OF MANUFACTURE: "BRAZIL" /// NO WELD REPAIRS /// DUAL CERTIFICATE AISI 304/AISI 304L /// ASTM A262 PRACTICE E

a) Free from mercury contamination.
b) Material free of contamination from radioactivity. (Guarantee while stored under responsibility of Aperam Inox América do Sul S.A.).
c) Certify that the results above are correct and in acc. with the specifications or accepted concession.
d) Quality management system certified acc to standard ISO 9001 - Certificate ABS QE Nº 30071.
e) Quality management system certified acc to standard ISO/TS 16949 - Certificate ABS QE Nº 38324.
f) Environmental management system certified acc to standard ISO 14001 - Certificate ABS QE Nº 65989.
g)Country of Melt: Brazil. Country of manufacture: Brazil.

Paulo Sérgio Ribeiro
Qualified Inspector
Aperam South America

PO/SO#	119111 / 4007
DWG#	
ITEM#	
DATE	2-19-13
DESC.	PLATE 1" THK 304

PHPK TECHNOLOGIES
QA APPROVAL

Plate

JACQUET NO.
- 12364

MWTR-6533 Item 1

* OS HT# used for 12-4007-6538 Item 1 (1" THK x 18" OD)

WINNER® WINNER STAINLESS STEEL TUBE CO.,LTD

ADDRESS: 3RD INDUSTRIAL PARK ,XIAOBU VILLAGE, HUASAN TOWN,HUADU DISTRICT,GUANGZHOU,P.R.C
TEL: +86-20-86847851 FAX: +86-20-86941744

ORIGINAL

Customer: MERIT BRASS

Order No.: P257595

MILL TEST CERTIFICATE(Issued Acc. to 3.1/EN 10204:2005)

Issued Date:2006/12/20

Certificate No.:MB-F629

Article:Stainless steel welded pipe — Specification: ASTM A312-04b/ASME SA312-04b

Item No.		Size	Length	Qty,Pcs	Net Weight	Type	Strip finish	Heat No.	Annealed Temperature (°F)	Hold Time (minute)	Cooling	Surface Finish	Hydrostatic Test (psi)	ET
86#	P5096	6"×SCH 40S	20'	4	679.07	TP304/304L	HR	TU-YU239958	1925	17	Water quench	pickled	1300	good
87#	P5096	6"×SCH 40S	20'	4	679.07	TP304/304L	HR	TU-YU239958	1925	17	Water quench	pickled	1300	good
88#	P5096	6"×SCH 40S	20'	4	679.07	TP304/304L	HR	TU-YU239958	1925	17	Water quench	pickled	1300	good
89#	P5096	6"×SCH 40S	20'	2	339.54	TP304/304L	HR	TU-YU239958	1925	17	Water quench	pickled	1300	good

	Chemical Composition (%)								Mechanical Test				
	C	Mn	P	S	Si	Ni	Cr	Mo	T. S. (Ksi)	Y. S.(Ksi)	Elongation(%)	Flattening	Hardness
MIN						8.00	18.00	—	≥75	≥30	≥35	≤H good	HRB ≤90
MAX	0.035	2.00	0.045	0.030	1.00	13.00	20.00	—					
86#	0.028	1.40	0.032	0.006	0.46	8.13	18.28	—	83	45	51	58.5	84
87#	0.028	1.40	0.032	0.006	0.46	8.13	18.28	—	83	45	51	58.5	84
88#	0.028	1.40	0.032	0.006	0.46	8.13	18.28	—	83	45	51	58.5	84
89#	0.028	1.40	0.032	0.006	0.46	8.13	18.28	—	83	45	51	58.5	84

Remarks:
1. Corrosion test as per ASTM-A262, Practice E :accepted.
2. Dimensions & Visual :good.
3. Materials are free from mercury contamination.

We, Winner Stainless Steel Tube Co., Ltd., hereby certify that the products described herein have been manufactured in accordance with the standards and specifications specified as above and meet the requirements as per order.

Q. C. Manager/Work Inspector:

FERGUSON®

MWTR-6533 Item 2

QA REVIEW
AB
PHPK TECHNOLOGIES

PO. 106916
07-07-0088

PHPK TECHNOLOGIES	**Material & Weld Traceability Record**	12-4004-MWTR-6534
	PHPK Form QA-FO-0011	File Name

Drawing Number		Next Assembly Number	
Dwg #	Rev Ltr	Dwg #	Rev Ltr
12-4007-6534	N/C	12-4007-6533	N/C

Inner Nozzle Plate 02 W1	**Modification 3**	
Work Ticket Number	Serial Number	Date Assembled
4007010	***R8***	3/5/2013

Put the heat number or serial number on the completed assembly with a permanent marker.

Parts & Subassemblies

Item	Part Number *(Dwg No - Item No)*	Heat Number *(Enter here or below)*	Description
1	12-4007-6535	E7N7	Inner Nozzle Plate
2	0700-24-11-0010	YX1110-537	Tube, 1-1/2" OD x 0.188 Wall
3			
4			
5			
6			
7			
9			
10			
11			
16			
26			

Raw Material & Welding

Joint ID No	Items Joined		Item Heat Numbers		Weld Filler Metal Heat Number	Welder ID No.
	A	*B*	*A*	*B*		
JT-7	*1*	*2*	*E7N7*	*YX1110-537*	*118442*	*P-15*
JT-8	*1*	*2*	*E7N7*	*YX1110-537*	*118442*	*P-15*

-- PHPK TECHNOLOGIES PROPRIETARY --

PARTS LIST

ITEM	QTY	PART NUMBER	DESCRIPTION	TAG NUMBER	MATERIAL	NOTES
1	1	12-4007-6535	INNER NOZZLE PLATE		ASME SA240 304	
2	3.500 in	0700-24-11-0010	TUBE, 1-1/2 OD X 0.188 WALL		ASME SA213 SMLS TP304/304L	C03

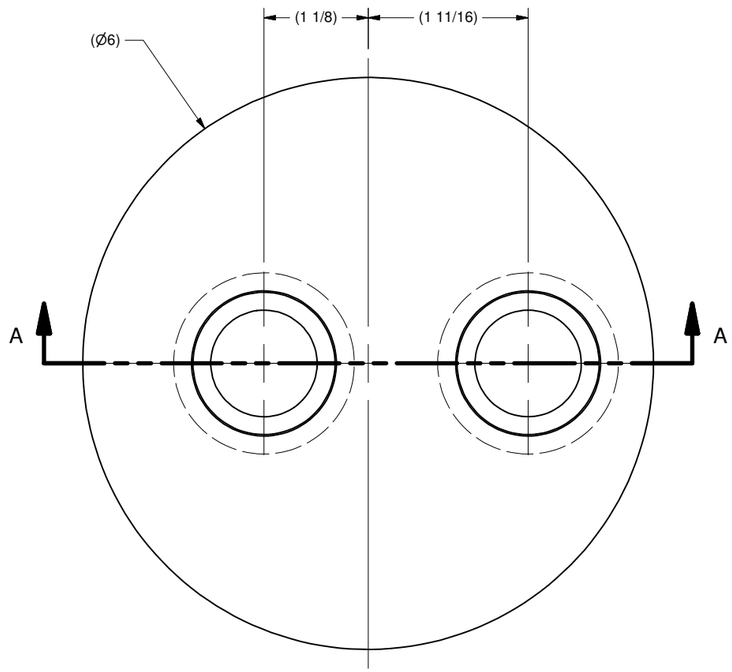

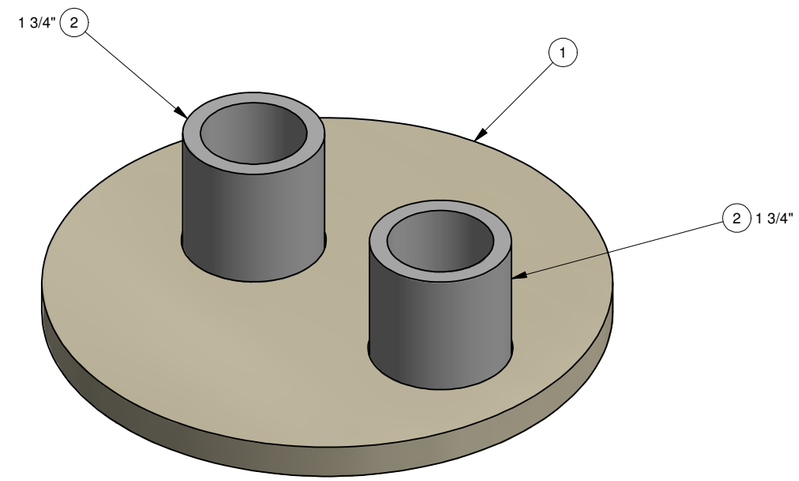

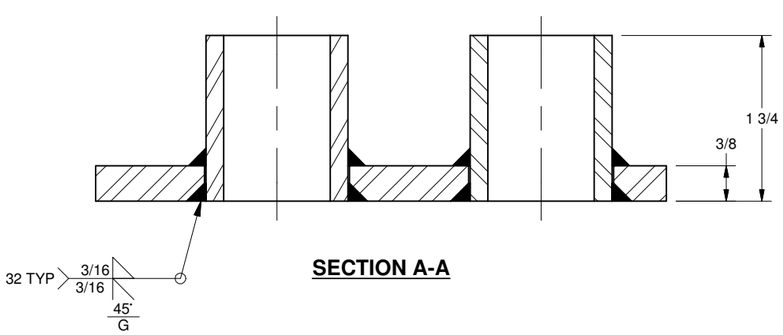

SECTION A-A

12-4007-6533 1 REQD

WHERE USED

DRAWN BY	DMF	TOLERANCES		PHPK TECHNOLOGIES 2111 BUILDERS PLACE COLUMBUS, OH 43204 614-486-4750 WWW.PHPK.COM
CHECKED	SPW	FRACTION	± 1/8	
ENGINEER	SPW	2 PL .XX	± .01	TITLE YALE LAR CRYOSTAT MODIFICATIONS INNER NOZZLE PLATE 02 W1
		3 PL .XXX	± .005	
REVIEWED	MJA	ANGULAR	± 1/2°	
RELEASE DATE	1/22/2013	6185 EDR NO		SIZE B DRAWING NUMBER 12-4007-6534 CHG N/C
DIMENSIONS ARE IN INCHES AND PROVIDED PRIOR TO SURFACE TREATMENTS, UNLESS NOTED.				EST WEIGHT 3.44 lbmass v3.10.15 132156 SHEET 1 OF 1

-- PHPK TECHNOLOGIES PROPRIETARY --
INFORMATION ON THIS DRAWING MAY NOT BE DISCLOSED TO ANY PARTY WITHOUT WRITTEN AUTHORIZATION FROM PHPK

-- PHPK TECHNOLOGIES PROPRIETARY --

RAW MATERIAL		
RM DESC	MATERIAL	NOTES
PLATE CIRCLE, 3/8" THK X 6 5/8" OD	ASME SA240 304	

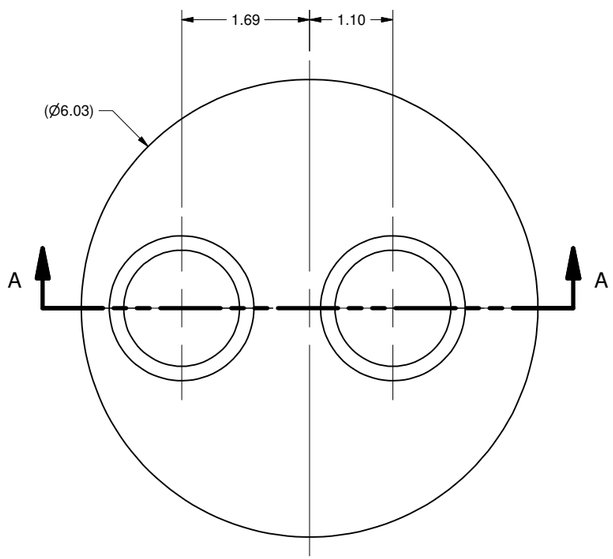

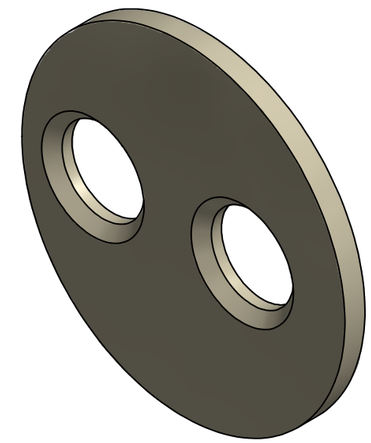

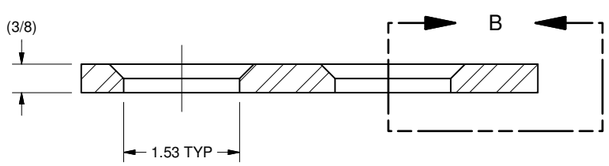

SECTION A-A

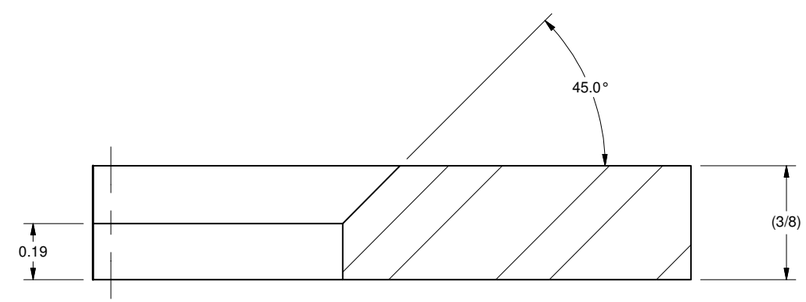

DETAIL B

12-4007-6534 1 REQD

WHERE USED

DRAWN BY	DMF	TOLERANCES		PHPK TECHNOLOGIES 2111 BUILDERS PLACE COLUMBUS, OH 43204 614-486-4750 WWW.PHPK.COM
CHECKED	SPW	FRACTION	± 1/8	
ENGINEER	SPW	2 PL .XX	± .01	TITLE YALE LAR CRYOSTAT MODIFICATIONS INNER NOZZLE PLATE
		3 PL .XXX	± .005	
REVIEWED	MJA	ANGULAR	± 1/2°	
RELEASE DATE	1/22/2013	6185	EDR NO	SIZE B / DRAWING NUMBER 12-4007-6535 / CHG N/C
DIMENSIONS ARE IN INCHES AND PROVIDED PRIOR TO SURFACE TREATMENTS, UNLESS NOTED.				EST WEIGHT 2.65 lbmass / v3.10.15 133156 / SHEET 1 OF 1

-- PHPK TECHNOLOGIES PROPRIETARY --
INFORMATION ON THIS DRAWING MAY NOT BE DISCLOSED TO ANY PARTY WITHOUT WRITTEN AUTHORIZATION FROM PHPK

NAS NORTH AMERICAN STAINLESS

METALLURGICAL TEST REPORT

6870 Highway 42 East
Ghent, KY 41045-9615
(502) 347-6000

Certificate: 793415 02

Customer: 0570 014

Mail To:
ALRO METALS SERVICE CENTER
ALRO GROUP
P.O. BOX 927
JACKSON, MI 49204-0927

Ship To:
ALRO METALS SERVICE CENTER
CUSTOMER PICKUP
5859 ALRO PARK DRIVE
POTTERVILLE, MI 48876

Date: 12/11/2012 Page: 1

Steel: 304/304L

Finish: HRAP

Mill Order: [illegible]

PRODUCT DESCRIPTION:

[illegible] STEEL COIL, MILL PLATE, HRAP; UNS [illegible]
[illegible], 11b,A480,11b,A666/11,ASME SA240/11a,SA480/11a,SA666/11a
[illegible] ONLY ON FOLLOWING ASTM: A276/10,A479/11,A484/10,A313/11
[illegible] ONLY ON FOLLOWING ASME: SA312/11,SA479/11
[illegible] AMD3(W CRM MDAS); MIL-[illegible]
[illegible]/ISO 15156-3:2003 A, MP0103/07;QOS7SSP-1 X MAG PERM
MIN. SOLUTION ANNEAL TEMP 1900F, WATER QUENCHED

REMARKS:

Mat'l is Free of Mercury Contamination. No weld repairs.
EN 10204:2004 3.1, RoHS Compliant
Material is Free of Radioactive Contamination
NAS Steel Making Process: EAF, AOD, & Cont. Casting
Product Mfg.by a Quality Mgt.Sys. in Conf. w/ISO 9001
Melted & Manufactured in the USA; Mat'l is DFARs Compliant

Product ID #	Coil #	Thickness	Width	Weight	--------Length-------	Mark	Pieces	EDP #
DD4118	* 03E7N7 C	.3750	60.0000	6,975	SHEET 120.00	11	9	18552347

CHEMICAL ANALYSIS

CM(Country of Melt) ES(Spain) US(United States) ZA(South Africa) JP(Japan)

Chemical analysis per ASTM A751/08

HEAT	CM	C %	CR %	CU %	MN %	MO %	N %	NI %	P %	S %
E7N7	US	.0212	18.1295	.3005	1.7755	.2495	.0709	8.0445	.0310	.0010

SI %
.2460

MECHANICAL PROPERTIES

Product ID #	Coil #	Loc	Dir	UTS KSI	.2% YS KSI	ELONG %-2"	Hard RB	R of A %
DD4118	03E7N7 G	F	T	91.78	54.57	52.91	90.00	67.90

mWTR-6534 Item 1
(see also 12-4007-6535)

PO/SO#	119108 / 4007
DWG#	4007-165 [illegible]
ITEM#	
DATE	2-18-13
DESC.	PLATE DZIC 6.625" x [illegible]

PHPK TECHNOLOGIES
QA APPROVAL KB Plate

ALRO STEEL/METAL
RT06887783

RECEIVED at
Alro Potterville
DEC 12 2012
by _____

NAS hereby certifies that the analysis on this certification is correct. Based upon the results and the accuracy of the test methods used, the material meets the specifications stated. These results relate only to the items tested and this report cannot be reproduced, except in its entirety, without the written approval of NAS.

Technical Dept. Mgr. ERIC HESS 12/11/2012

CHANGZHOU HENGFENG SEAMLESS STEEL TUBE MILL

MILL TEST CERTIFICATES

ISO9001:2008 CERTIFICATE (Certificate NO.:1115090)

DATE OF ISSUE:2012/05/11

CUSTOMER: PMC STAINLESS LTD. 620 JESSE CROSIC ROAD BRASELTON,GA 30517 USA

CERTIFICATE NO.:120512

P.O.NO.:45334A

ORDER NO.:45334A

COMMODITY:STAINLESS STEEL SEAMLESS TUBING PER PURCHASE ORDER 45334A

GRADE:ASTM A213-10a TP304/304L

CONDITION:COLD FINISH/SOLUTION TREATED/PICKLED/PLAIN END DO POLISHED 240 GRIT

HEAT NO.:YX1110-537 (See below)

CHEMICAL CONTENTS(%)

ELEMENTS	C	Mn	P	S	Si	Ni	Cr			
SPECIFICATION	≤0.035	≤2.00	≤0.040	≤0.030	≤0.75	8.0~10.0	18.0~20.0			
RESULTS(PERCENT)	0.02	0.710	0.031	0.002	0.350	8.05	18.47			

PHYSICAL PROPERTIES

No.	Dimensions O.D (inch)	W.T (inch)	Length (feet)	Pieces	Weight (LB)	0.2%YS (mpa) ≥205	TS (mpa) ≥515	EL (%) ≥35	FLARING TEST	FLATTENING TEST	HARDNESS HRB ≤90	EDDY CURRENT TEST 100%
1	5/16	0.035	20			254	548	49	OK	OK	78	OK
2	5/8	0.035	20			268	552	48	OK	OK	80	OK
3	1-3/8	0.049	20			255	550	48	OK	OK	79	OK

REMARKS:
AS PER ASTM A213-10a/ASME SA213-10/AMS-10
IN COMPLIANCE TO NACE MR0175-2003/MR0103-2003
SOLUTION HEAT TREATMENT:1050°C X 1.5m/min
NO WELD REPAIR WAS PERFORMED
FREE FROM MERCURY CONTAMINATION
IC TESTING ACC. TO ASTM A262E :PASSED
COUNTRY OF ORIGIN:CHINA
PMI TESTING DONE
MILL CERTIFICATES TO EN 10204/3.1
IC TESTING ACCORDANCE TO ASTM A262 E--SATISFACTORY

1.WE HEREBY CERTIFY THAT THE MATERIAL DESCRIBED HEREIN HAS BEEN TESTED AND THE TEST RESULTS ARE IN COMPLIANCE WITH THE TERMS OF THE PURCHASE ORDER OR CONTRACT
2.THE CERTIFICATE SHALL NOT BE REPRODUCED, EXCEPT IN FULL, WITHOUT THE WRITTEN APPROVAL OF THE COMPANY.

CHANGZHOU HENGFENG SEAMLESS STEEL TUBE MILL

MANAGER OF QUALITY ASSURANCE DEPARTMENT

mWTR-6534 Item 2

PO/SO#	119148
DWG#	
ITEM#	
DATE	2-18-13
DESC.	Tube 1½" X .188" WALL SMLS. 304/304L

PHPK TECHNOLOGIES

QA APPROVAL MB

0700-24-11-0010

HT # YX1110-537

FORM U-2A MANUFACTURER'S PARTIAL DATA REPORT (ALTERNATIVE FORM)

A Part of a Pressure Vessel Fabricated by One Manufacturer for Another Manufacturer
As Required by the Provisions of the ASME Boiler and Pressure Vessel Code Rules, Section VIII, Division 1

1. Manufactured and certified by **PHPK Technologies, 2111 Builders Place, Columbus, Ohio, 43204**
(Name and address of Manufacturer)

2. Manufactured for **Yale University, PO Box 208228, New Haven, Connecticut, 06520**
(Name and address of Purchaser)

3. Location of installation **Fermi National Accelerator Laboratory, Wilson and Kirk Rd, WH10W Rm 1057, Batavia, Illinois, 60510**
(Name and address)

4. Type **Bolted Cover Plate** [Description of vessel part (shell, two-piece head, tube bundle)] **4866** (Manufacturer's serial number) **N/A** (CRN)

66 (National Board number) **12-4007-6532** (Drawing Number) **PHPK Technologies** (Drawing prepared by) **2013** (Year built)

5. ASME Code, Section VIII, Div. 1 **2010/ 2011** [Edition and Addenda (date)] **N/A** (Code Case number) **N/A** (Special Service per UG-120(d))

6. Shell: (a) Number of course(s) **N/A** (b) Overall length **0'**

Course(s)			Material	Thickness		Long. Joint (Cat. A)			Circum. Joint (Cat. A, B, & C)			Heat Treatment	
No.	Diameter	Length	Spec./Grade or Type	Nom.	Corr.	Type	Full, Spot, None	Eff.	Type	Full, Spot, None	Eff.	Temp.	Time
	N/A	N/A	N/A	N/A	N/A	N/A	N/A	N/A	N/A	N/A	N/A	N/A	N/A

7. Heads: (a) **N/A** (Material spec. number, grade or type) (H.T. - time and temp.) (b) **N/A** (Material spec. number, grade or type) (H.T. - time and temp.)

	Location (Top, Bottom, Ends)	Thickness		Radius		Elliptical Ratio	Conical Apex Angle	Hemispherical Radius	Flat Diameter	Side to Pressure		Category A		
		Min.	Corr.	Crown	Knuckle					Convex	Concave	Type	Full, Spot, None	Eff.
(a)	MIDDLE	.79"	0	N/A	N/A	N/A	N/A	N/A	11.25			N/A	N/A	N/A

If removable, bolts used (describe other fastening) **N/A** (Material spec. number, grade, size, number)

8. MAWP **45 psi** (Internal) **15 psi** (External) at max. temp. **100 °F** (Internal) **100 °F** (External) Min. design metal temp. **-320 °F** at **45 psi**

9. Impact test **N/A** (Indicate yes or no and the component(s) impact tested) at test temperature of **N/A**

10. Hydro., pneu., or comb. test pressure **Pneu. at 50 psi** Proof test **N/A**

11. Nozzles, inspection, and safety valve openings:

Purpose (Inlet, Outlet, Drain, etc.)	No.	Diameter or Size	Type	Material		Nozzle Thickness		Reinforcement Material	Attachment Details		Location (Insp. Open.)
				Nozzle	Flange	Nom.	Corr.		Nozzle	Flange	
Wire Feedthrough	2	1.38	CF	SA213 304	SA479 304	.19	0		UW-16.1(k)	App 2 Fig 2-4(5)	

12. Identification of parts(s)

Name of Part	Quantity	Line No.	Mfr's. Identification No.	Mfr's. Drawing No.	CRN	National Board No.	Year Built

13. Supports: Skirt **N/A** (Yes or no) Lugs **N/A** (Number) Legs **N/A** (Number) Other **N/A** (Describe) Attached **N/A** (Where and how)

14. Remarks
Partials information entered above
N/A

CERTIFICATE OF SHOP/FIELD COMPLIANCE

We certify that the statements made in this report are correct and that all details of material, construction, and workmanship of this pressure vessel part conform to the ASME BOILER AND PRESSURE VESSEL CODE for Pressure Vessels, Section VIII, Division 1. U Certificate of Authorization No. **35253** Expires **August 17, 2014**

Date **03/29/2013** Name **PHPK Technologies** (Manufacturer) Signed Keith L. Brown (Representative)

CERTIFICATE OF SHOP/FIELD INSPECTION

I, the undersigned, holding a valid commission issued by The National Board of Boiler and Pressure Vessel Inspectors and/or the State or Province of **KY, OH** and employed by HSB CT of Hartford, CT have inspected the pressure vessel part described in this Manufacturer's Data Report on March 29, 2013, and state that, to the best of my knowledge and belief, the Manufacturer has constructed this pressure vessel part in accordance with ASME BOILER AND PRESSURE VESSEL CODE, Section VIII, Division 1. By signing this certificate neither the Inspector nor his/her employer makes any warranty, expressed or implied, concerning the pressure vessel part described in this Manufacturer's Data Report. Furthermore, neither the Inspector nor his/her employer shall be liable in any manner for any personal injury or property damage or a loss of any kind arising from or connected with this inspection.

Date **03/29/2013** Signed Brock Leasholt (Authorized Inspector) Commissions **13582A, KY837, OH874** [Nationall Board (incl. endorsements), State, Province and number]

Section VI

Certified Material Test Reports

- Pipe & Tube
- Plate
- Weld Wire

Pipe
&
Tube

WINNER® WINNER STAINLESS STEEL TUBE CO.,LTD

ADDRESS: 3RD INDUSTRIAL PARK ,XIAODU VILLAGE, HUASAN TOWN,HUADU DISTRICT,GUANGZHOU,P.R.C
TEL: +86-20-86847851 FAX: +86-20-86941744

ORIGINAL

Customer: MERIT BRASS

Order No.: P257595

MILL TEST CERTIFICATE(Issued Acc. to 3.1/EN 10204:2005)

Issued Date:2006/12/20

Certificate No.:MB-F629

Article:Stainless steel welded pipe

Specification: ASTM A312-04b/ASME SA312-04b

Item No.		Size	Length	Qty.Pcs	Net Weight	Type	Strip finish	Heat No.	Annealed Temperature (°F)	Hold Time (minute)	Cooling	Surface Finish	Hydrostatic Test (psi)	'ET
86#	P5096	6"×SCH 40S	20'	4	679.07	TP304/304L	HR	TU-YU239958	1925	17	Water quench	pickled	1300	good
87#	P5096	6"×SCH 40S	20'	4	679.07	TP304/304L	HR	TU-YU239958	1925	17	Water quench	pickled	1300	good
88#	P5096	6"×SCH 40S	20'	4	679.07	TP304/304L	HR	TU-YU239958	1925	17	Water quench	pickled	1300	good
89#	P5096	6"×SCH 40S	20'	2	339.54	TP304/304L	HR	TU-YU239958	1925	17	Water quench	pickled	1300	good

Chemical Composition (%)

	C	Mn	P	S	Si	Ni	Cr	Mo
MIN						8.00	18.00	—
MAX	0.035	2.00	0.045	0.030	1.00	13.00	20.00	—
86#	0.028	1.40	0.032	0.006	0.46	8.13	18.28	—
87#	0.028	1.40	0.032	0.006	0.46	8.13	18.28	—
88#	0.028	1.40	0.032	0.006	0.46	8.13	18.28	—
89#	0.028	1.40	0.032	0.006	0.46	8.13	18.28	—

Mechanical Test

	T. S. (Ksi)	Y. S.(Ksi)	Elongation(%)	Flattening	Hardness
MIN	≥75	≥30	≥35	≤H good	HRB ≤90
86#	83	45	51	58.5	84
87#	83	45	51	58.5	84
88#	83	45	51	58.5	84
89#	83	45	51	58.5	84

Remarks:
1. Corrosion test: as per ASTM-A262, Practice E :accepted
2. Dimensions & Visual :good.
3. Materials are free from mercury contamination.

We, Winner Stainless Steel Tube Co., Ltd., hereby certify that the products described herein have been manufactured in accordance with the standards and specifications specified as above and meet the requirements of our order.

Q. C. Manager/Work Inspector:

FERGUSON®

PO. 106916
07-07-0088

BRISMET

BRISTOL METALS, LLC

MILL TEST REPORT

RM ID NUMBER
118583

SALES ORDER / RLS
007597 / 4

CERT ID / REV
00068944 / 01

ROBERT-JAMES SALES, INC.
THESE TEST REPORTS APPLY TO
Kendall Holdings
P.O. 0117635
ROBERT-JAMES NO. CC6842
FOOTAGE _____ DATE 8-31
ITEM NO. _____
MARK NO. _____

SOLD TO

ROBERT JAMES SALES
2585 WALDEN AVENUE
BUFFALO, NY 14225-7999
USA

CUSTOMER P.O. **AK0069**

CUSTOMER PART

HEAT NO. **950128**

DESCRIPTION:314001003120100
14" WELDED PIPE SCHED 10S TP304/TP304L (UNS# S30400/S30403) A312

CERTIFICATION REQUIREMENTS

ENGINEERING
ASTM A312-11 ASME SA312-10, 11a ADD.

HYDRO PRESSURE
400 PSI

HEAT TREAT
Annealed at1900 Deg F. and water quenched to below 800 Deg. F. in less than 3 minutes.

Chemical

C	Cr	Mn	Ni	N	P	Si	S
.013	18.4	1.61	8.1	.07	.031	.42	.012

Mechanical

TEST	UNITS	RESULTS
Tensile PSI	PSI	90500
Yield PSI	PSI	46000
Elong %		56

Hardness

RB86

TEST	RESULT
TG Bend	Pass

Corrosion

TEST	RESULT
A262 "E"	No result

This report shall not be altered or reproduced, except in full, without the prior written approval of Bristol Metals LLC.
This test report represents the actual attributes of the items furnished and all items were manufactured, sampled, inspected, and tested in full compliance with applicable specifications and your purchase order.
Certification is in accordance with EN10204:2004 type 3.1.
Chemical content is % by weight. Mechanical test results are in English units (inches and pounds).
No weld repairs have been performed on the base material.
Hardness in accordance with NACE MR0175 and MR0103 and material is free of cold work to enhance mechanical properties.
Pipe is Pickled and Passivated in accordance with ASTM A380.
Bristol Metals has a Quality Management System in place that is in compliance with ISO 9001:2008.
Bristol Metals does not add mercury during any manufacturing process.
NAFTA country of orgin: USA. Pipe/Tube Manufactured in the USA.
Raw Material Melt Source USA
FAR BAA - Complies, DFARS BAA - Complies, FAR TAA - Complies

PO/SO#	117635
DWG#	07-03-009L
ITEM#	
DATE	9-9-12
DESC.	Pipe 14" SCH10 WLD 304/304L

PHPK TECHNOLOGIES

QA APPROVAL

Rick Duncan - Quality Assurance Mgr

Date Printed 05/01/2012

QF-576 qtc3022 (v1.1)

Outer Head Weldment
Item 2 on 12-4007-6521

MATERIAL TEST REPORT

Sold To: 3300580	Ship To: 3300580
SOUTHWEST STAINLESS / FAIRFIELD SUITE B 2001 DDC WAY FAIRFIELD OH 45014 US	SOUTHWEST STAINLESS / FAIRFIELD SUITE B 2001 DDC WAY FAIRFIELD OH 45014 US

Purchase Order: 625018
Sales Order: 105759
Material: M003062506500 A269 A/SA 249 T304L 06250D 065
Delivery: 80158072

Description: ASTM A269-04, ASTM A554-03, ASTM/ASME A/SA 249-04A
WELDED STNLS TUBING,TP304/TP304L DUAL CERT. UNS S30400/30403

Test: NDT ELECTRIC TESTED TO ASTM A450 OR A1016 & APPLICABLE TEST METHOD E309 OR E426. FLANGE TEST PASSED. FLARE TEST PASSED. FLATTENING TEST PASSED. REVERSE BEND TEST PASSED. REVERSE FLATTENING TEST PASSED.

Heat Number:		OF54572	OF64125
CARBON	Idl	0.023	0.023
MANGANESE	Idl	1.630	1.600
PHOSPHORUS	Idl	0.030	0.029
SULFUR	Idl	0.002	0.002
SILICON	Idl	0.400	0.380
NICKEL	Idl	8.100	8.100
CHROMIUM	Idl	18.200	18.400
MOLYBDENUM	Idl	0.320	0.210
COPPER	Idl	0.470	0.380
ALUMINUM	Idl		
NITROGEN	Idl	0.038	0.055
Ultimate (PSI)		89,500 / 90,100	90,000 / 90,000
Yield (PSI)		46,400 / 49,200	43,500 / 43,600
Elongation (%)		60 / 61	65 / 65
Hardness (RB)		84 / 84	82 / 82

We hereby certify that the above figures are correct as contained in the records of the company and that each batch has been manufactured, sampled, tested and inspected in accordance with the applicable specification stated above. This Document conforms to the requirements of Specification EN 10204 Inspection Document Type 3.1.
Webco does not use mercury in testing or production of its stainless steel products.
According to our records and to the best of Webco's knowledge, understanding and belief, this product was not contaminated during manufacture in our facilities.
This document was prepared by means of electronic processing and is valid without signature.

Date: 05/27/2008

Mike Allen
Quality Inspection Manager

PO/SO#	117089	PHPK TECHNOLOGIES
DWG#		
ITEM#		
DATE	6-14-12	QA APPROVAL
DESC.	Tube 5/8" X .065 304/304L	

WT065A.625

0700-10-04-0018

CHANGZHOU HENGFENG SEAMLESS STEEL TUBE MILL

MILL TEST CERTIFICATES

ISO9001:2008 CERTIFICATE (Certificate NO.:1115090)

DATE OF ISSUE:2012/05/11

CUSTOMER: PMC STAINLESS LTD. 820 JESSE JONES BLVD BRASELTON,GA 30517 USA

P.O.NO.:45334A

CERTIFICATE NO.:125512

QUANTITY:STAINLESS STEEL SEAMLESS TUBING PER PURCHASE ORDER 45334A

ORDER NO.:45334A

CONDITION:COLD FINISH/SOLUTION TREATED/PICKLED/PLAIN END DO POLISHED 240 GRIT

GRADE:ASTM A213-10a TP304/304L

CHEMICAL CONTENTS(%)

ITEM NO.:YX1110-537 (See below)

ELEMENTS	C	Mn	P	S	Si	Ni	Cr			
SPECIFICATION	≤0.035	≤2.00	≤0.040	≤0.030	≤0.75	8.0~11.0	18.0~20.0			
RESULTS(PRODUCT)	0.02	0.730	0.021	0.002	0.350	8.05	18.47			

PHYSICAL PROPERTIES

No.	Dimensions O.D (inch)	W.T (inch)	Length (feet)	Pieces	Weight (g)	0.2%YS (mpa) ≥205	TS (mpa) ≥515	EL (%) ≥35	FLARING TEST	FLATTENING TEST	HARDNESS HRB ≤90	EDDY CURRENT TEST 100%
1	5/16	0.035	20			254	548	49	OK	OK	78	OK
2	5/8	0.035	20			259	552	45	OK	OK	80	OK
3	1-3/8	0.049	20			255	550	45	OK	OK	79	OK

REMARKS:

AS PER ASTM A213-10a/ASME SA213-10/ASME-10

IN COMPLIANCE TO NACE MR0175-2009/MR0103-2005

SOLUTION HEAT TREATMENT:1050°C X 1.5m/min

NO WELD REPAIR WAS PERFORMED

FREE FROM MERCURY CONTAMINATION

IGC TESTING ACC. TO ASTM A262E :PASSED

COUNTRY OF ORIGIN:CHINA

PMI TESTING DONE

MILL CERTIFICATES TO EN 10204/3.1

IGC TESTING ACCORDANCE TO ASTM A262 E--SATISFACTORY

1.WE HEREBY CERTIFY THAT THE MATERIAL DESCRIBED HEREIN HAS BEEN TESTED AND THE TEST RESULTS ARE IN COMPLIANCE WITH THE TERMS OF THE PURCHASE ORDER OR CONTRACT

2.THE CERTIFICATE SHALL NOT BE REPRODUCED, EXCEPT IN FULL, WITHOUT THE WRITTEN APPROVAL OF THE COMPANY.

CHANGZHOU HENGFENG SEAMLESS STEEL TUBE MILL

MANAGER OF QUALITY ASSURANCE DEPARTMENT

PO/SO#	119148	PHPK TECHNOLOGIES
DWG#		
ITEM#		
DATE	2-18-13	QA APPROVAL NO
DESC.	TUBE 1½" X .188" WALL SMLS. 304/304L	

0700-24-11-0010

HT # YX1110-537

Rath

RathGibson Janesville LLC
2505 FOSTER AVENUE
JANESVILLE, WISCONSIN 53547-0389 U.S.A.
PHONE 608-754-2222, FAX 608-754-0889

CERTIFIED REPORTS OF TESTS

per EN 10204:3.1

Notified Body TUV Rheinland NA, ISO 9001 2008 Cert. No. 74 100 2835 (DAR), 74 300 2835 (ANAB), PED 01 202 USA/Q-02 0691, AD-WO 01 202 USA/A-00 6473

CUSTOMER ORDER #	C249394/1	SOLD TO	TW METALS INC.	SHIP TO	TW METALS - CAROL STREAM
PURCHASE ORDER #	M49270193		P O BOX 644		235 TUBEWAY DRIVE
CERTIFICATION DATE	1/30/2012 7:59:52AM		EXTON, PA 19341-0644		CAROL STREAM, IL 60188
SHIP VIA	CUST P/U/COLLECT				

DESCRIPTION	1.500" X 0.120" AVG TP304/TP304L ASME/ASTM SA249/A249/A269/A554	ITEM NUMBER	JT1500108S30403300020
PRODUCT TYPE	WELDED TUBE, BEAD REDUCED, BRIGHT SOLUTION ANNEALED	QUANTITY	3,000 FT
HEAT TREATMENT	1900F (1040C) MIN, QUENCHED IN INERT GAS ATM	NUMBER OF PIECES	150
REVISION DATE	ASME SA249-E10, ASTM A249-10a, A269-10, A554-10	MELT ORIGIN	USA
COMMENTS	Material is FAR BAA, DFARS BAA, FAR TAA compliant.	MELT PRACTICE	EAM / AOD

MADE IN USA

CHEMICAL ANALYSIS (WT%)

Heat #	C	Mn	P	S	Si	Cr	Ni	Mo	Cu	Co	N
835886	0.014	1.54	0.033	0.0090	0.39	18.2	8.10	0.44	0.46	0.33	0.07

POSITIVE MATERIAL ID
OK (ASTM E1476)

MECHANICAL TEST(S)

YIELD STRENGTH (0.2% OFFSET)	TENSILE STRENGTH	ELONGATION (% IN 2")	HARDNESS
54900 PSI (379 MPA)	92000 PSI (634 MPA)	56	HRB 86
53900 PSI (372 MPA)	91000 PSI (627 MPA)	56	HRB 86
FLANGE TEST - PASS	REVERSE BEND - PASS	REVERSE FLATTENING - PASS	DIMENSIONS - PASS
FLATTENING TEST - PASS	FLARE TEST - PASS	EDDY CURRENT - PASS	

ADDITIONAL TEST(S)

N/A

TW METALS
TEST REPORTS
JAN 31 2012
ACCEPTED BY

ATTEST:
RathGibson Janesville LLC does not use mercury, lead, sulfur or any special metal alloy which is liquid at ambient temperature in its product or facility. There are no known detrimental materials in the line marking ink. Weld repair was not used to manufacture this product.
RathGibson's stainless steel tubing manufacturing process does not use any of the products targeted in the U.S. Clean Air Act of 1990, and is compliant with the European Community RoHS Directive 2002/95/EC.
We hereby testify that the material described herein has been manufactured, inspected, and tested to be in accordance with the applicable specifications as stated in the "ORDER DATA" portion of this report. Technical inquiries regarding this form should be directed to the Technical Services Group. All other assistance concerning this certification should be directed to the preparer (see below).
For purposes of determining conformance with the specifications, dimensional requirements shall be rounded in accordance with the rounding-off method of ASTM practice E 29 as noted in section 6.4.4.

Cert ID: 292958-2012-1-30
MTR8-01 Rev. 7 Rev. Date 06/11/2010

Michael Aston, Quality Assurance Manager, CQE, MR

Peggy Truesdill
Peggy Truesdill-dh, MILL CERTIFICATION

CONSIGNEE Please note - This consignment was turned over to carrier in first class condition being correctly loaded, at which time our responsibility for loss or damage in shipment ceased. For your protection please examine shipment as it arrives. If any shortage or damage is discovered, have a full description made by transportation agent on waybill before signing.

MSDS - Material Safety Data Sheets for this product have been supplied to your Purchasing Department and can also be downloaded from http://www.rathgibson.com. CAUTION: Processing that results in fumes, dust, or solutions may cause lung disease. See Material Safety Data Sheets for Additional information

SHALL NOT REPRODUCE - This certificate of test results shall not be reproduced, except in full without express written approval of RathGibson Janesville LLC.

Item 2 on 12-4007-6539
Outer Nozzle Plate 02 w1

0700-24-08-0018

PO/SO#	116579	PHPK TECHNOLOGIES
DWG#		
ITEM#		
DATE	4-9-12	QA APPROVAL
DESC.	TUBE 1½" X 0.120	

BRISTOL METALS L.P.
BRISTOL TN. U.S.A.
MILL TEST REPORT

TO: PRUDENTIAL STAINLESS
130 ESSEX AVENUE E.

AVENEL, NJ 07001

CUST NO: 557512
ORDER NO: 16602
PO NO: 8447
DATE: 07/27/2005

HEAT NO.: 820386
RM ID: A9040

6" OD WELDED TUBE .120" WALL TP304/TP304L ASTM A249-04a/ A269-02a/ASME SA249-01, 03 ADD.

CARBON	.016	CHROMIUM	18.22
MANGANESE	1.45	NICKEL	8.10
NITROGEN	.07	PHOSPHORUS	.03
SILICON	.41	SULFUR	.010
ELONG %	60	HARD RB	84
TENSILE	90000	YIELD	41900
FLANGE	OK	FLARE	OK
FLATTENING	OK	REVERSE BEND	OK
REVERSE FLATTENING	OK	TENSION	OK
HYDRO PRESSURE	650 PSI		

Annealed at 1900 Deg. F. and water quenched to below 800 Deg. F. in less than 3 minutes

Bristol Metals has a Quality Management System that is in compliance with ISO 9001:2000

Hardness in accordance with NACE MR0175 and MR0103 and material is free of cold work to enhance mechanical properties.
Bristol Metals does not add Mercury during any manufacturing process.
Chemical content is % by weight.
Mechanical test results are in English units (inches and pounds).
Certification is in accordance with EN10204:2004 type 3.1
We certify this report to be true and accurate, according to our records on file
No weld repairs have been performed on the base material.
Raw material country of origin melt source is USA

MIBR

Bristol Metals L.P.
David Singleton
Representative

%%[SEND]

0700-96-08-0018

PO/SO#	11405-4/3356
DWG#	
ITEM#	
DATE	7-22-4
DESC.	TUBE 6" X .120 304/304L

ROBERT JAMES SALES PO# - CB5636 PSP# - 557379-CCP

Customer Name	Customer PO#	Shipper No	Heat Number
Kendall Holdings/PHPK Technologie	0119220	47968	B6X3

FELKER BROS. CORP.

FELKER BROTHERS CORPORATION
22 NORTH CHESTNUT AVE
MARSHFIELD, WI USA 54449
(800) 826-2304

CERTIFIED MATERIAL REPORT

Heat# B6X3

CERTIFIED DATE: 3/20/2012

P.O. # M4927302S

PRODUCT

Part Description	TUBE A269/SA249 304L 6 OD .120		
Primary Specification	ASTM A269 10		
Grade	TP304/TP304L		
Other Specifications	ASME SA249 04 NACE MRO 175	ASTM A249 10A	NACE MRO 103

CHEMICAL COMPOSITION

Carbon	.0260
Chromium	18.2400
Copper	.4200
Manganese	1.7900
Molybdenum	.3300
Nickel	8.0400
Nitrogen	.0800
Phosphorus	.0340
Silicon	.3300
Sulfer	.0170

MECHANICAL PROPERTIES

Elongation	2IN	51.0
Hardness	RB	85
Tensile	PSI	93170
Yield	PSI	44830

MANUFACTURER STEPS

Anneal Temperature	F	1900
Bend / Reverse Bend Test		Pass
Corrosion Test A262 Practice E		Pass
Dimensional / Visual		Pass
Eddy Current - Weld - E426		Pass
Eddy Current - Full Body - E426		Pass
Etching Test - Weld		Pass
Flange Test		Pass
Flattening / Rev Flattening Test		Pass
Pickling / Passivation ASTM A380		Yes

TW METALS
TEST REPORTS
APR 19 2012
ACCEPTED BY

COMMENTS

Country of melt is UNITED STATES OF AMERICA
Manufactured in USA
TP304/TP304L Dual Cert, Welded
Felker Brothers does not use mercury in the production nor the testing of its products

CERTIFICATION

It is certified that all figures are correct as contained in the records of the company.
We certify that these products conform to specifications listed above.
ISO 9001 Certified
PED 97/23/EC Annex 1, Para 4.3, EN764-5
DIN 50049 3.1/EN 10204 3.1
FAR BAA Complies
DFARS BAA Complies
FAR TAA Complies
NSF/ANSI 61 Certified by WQA

Scott Martinek
Quality Manager

PO/SO#	119220	PHPK TECHNOLOGIES
DWG#		
ITEM#	0700-96-08-0018	
DATE	2-25-13	QA APPROVAL
DESC.	TUBE 6" O.D. x .120" WALL	

Tube

WQA TESTED & CERTIFIED INDEPENDENTLY C USA

Plate

NORTH AMERICAN STAINLESS

METALLURGICAL TEST REPORT

NORTH AMERICAN STAINLESS
6870 HIGHWAY 42 EAST
GHENT, KY 41045

Certificate: 25334 1

Customer: 000305.033

Mail To:
PHOENIX METALS COMPANY
4645 PORT ROYAL ROAD
SPRING HILL, TN 37174

Ship To:
PHOENIX METALS COMPANY
4645 PORT ROYAL ROAD
SPRING HILL, TN 37174

Date: 5/16/2007 Page: 1

Steel: 304

Finish: HRAP

Corrosion: ASTM A262/02aE;100Dend-OK

Your Order: 153659

NAS Order: IN 0024098 02

3428

PRODUCT DESCRIPTION:

STAINLESS STEEL COIL, HOT ROLLED, ANNEALED AND PICKLED.
ASTMA240/06b,480/06b,666/03,ASMESA240/04-A05,480/04-A05,SA666/04,
QQS766D-A X MG PERM,AMS5513H X MRK,MIL5059D,AMD3,X CRMN MEAS
Chem only for following: ASTM A276/A312/A479, ASME SA312/SA479

REMARKS:

Mat'l free of Hg contam. No weld repairs. RoHS-Compliant.
EN 10204 3.1 PED 97/23/EC Annex1, Para. 4.3 QQS763F Cond A
NACE MR0 175, NACE MR0 103, EN 10204 3.1.B
* Melted & Manufactured in the USA

Product Id	Coil #	Thickness	Width	Weight	Length	Mark	Pieces	Commodity Code
052DV7 B	052DV7 B	.1811	48.0000	17,400	COIL	4	1	

CHEMICAL ANALYSIS

CM(Country of Melt) ES(Spain) US(United States) ZA(South Africa)

Heat	CM	C	CR	CU	MN	MO	N	NI	P	S	SI
2DV7	US	.055	18.518	.332	1.781	.374	.047	8.244	.029	.001	.286

MECHANICAL PROPERTIES

Product Id#	Coil #	Id Loc	Dir	UTS KSI	.2% YS KSI	ELONG %-2"	Hard RB	Tail Hard
052DV7 B	052DV7 B	F	T	92.11	47.84	51.61	86.50	88.00

DWG 07-2032-6501 Item 10

11-5-07

QA REVIEW
SP 11-19-07
FHPK

NAS hereby certifies that the analysis on this certification is correct and the material meets the specifications stated.

QC ENGINEER ERIC HESS 5/16/2007

3/16" R 304 HT 2DV7 3428

Original Inner Cryostat Shell
07-2032-6501 Item 10

SO# 271262 SO LINE# 1
Customer PO # 073353 Pc. Count 2
Tag # Job #

v3.10.15 148/156

OUTO KUMPU

Outokumpu Stainless Coil, Inc.
425 North Martingale Road
Suite 2000
Schaumburg, IL 60173-2218
Tel (847) 517-4050
Tel (800) 833-8703
Fax (847) 517-2950
Fax (800) 545-8817
www.outokumpu.com/stainless/nad

****
* CERTIFICATION *
****

3/16" x 72" x Coil
T304 / 304L
Ht# 451657-002

TO:
METALS, INC.
Branch #9106
P. O. BOX 571300
TULSA OK 74157

HEAT 451657-002 ORDER 0606586/001 SON 1267438 B00000000 TAG 0028474 9/02/05

YOUR ORDER & DATE
30302 0/00/00 CUSTH METALS01 CUST TAG#

ITEM DESCRIPTION
GRADE 304L/304
Size 304L HRAP .1875 X 72 X COIL
Ship Condition A
Country of Melt : SWE
Country of Mfg. : SWE

Total Bundles 1 Total Weight 23501

SPECIFICATIONS

ASTM A262-98 PRAC E	ASME SA240-00ED 00 ADDENDA
ASME SA480-00ED 00 ADDENDA	AMS 5511G EXCEPT LINE MARK
AMS 5513G EXCEPT LINE MARK	MIL-S-4043B EX MO, CU=.75 MAX
MIL-S-5059D WITH EXCEPTIONS	QQ-S-766D AMEND III EX.P4.5.2
ASTM A240-00	ASTM A480-99B
ASTM A666-00	

MECHANICAL & OTHER TESTS
Test Condition A

		Hardness as tested	HB 167	
		Hardness as tested	HB 163	
Micro		Tensile strength,KSI (MPa)	90.0	(621)
Intergranular corrosion	NA	Yield strength,KSI (MPa)	45.0	(310)
Macro	OK	Elongation % in 4D	50.0	
	OK	Reduction of area %	.0	

CHEMICAL COMPOSITION

Carbon	(C)	.021	Manganese	(Mn)	1.650
Phosphorus	(P)	.028	Sulphur	(S)	.001
Silicon	(Si)	.320	Chromium	(Cr)	18.220
Nickel	(Ni)	8.280	Cobalt	(Co)	.180
Copper	(Cu)	.360	Moly	(Mo)	.400
Nitrogen	(N)	.070			
Iron	(Fe)	Balance			

Melt Practice
Refining Practice

We hereby certify that the material herein has been made and tested in accordance with the listed specification(s) and that the results of all tests are acceptable.

Free of known mercury contamination

QA REVIEW
SP 11-19-07
HPK

Quality Manager
Authorized Signature Chuck Turack

07-2032-6501 IT's 1 & 5
PO. 106047
WO 2032
HD30 X 3/16 ODPR
HD30 X 3/16 IDPR

Charles A. Turack

NORTH AMERICAN STAINLESS

METALLURGICAL TEST REPORT

6870 Highway 42 East
Ghent, KY 41045-9615
(502) 347-6000

Certificate: 767563 07

Customer: 0570 014

Mail To:
ALRO METALS SERVICE CENTER
ALRO GROUP
P.O. BOX 927
JACKSON, MI 49204-0927

Ship To:
ALRO METALS SERVICE CENTER
CUSTOMER PICKUP
5859 ALRO PARK DRIVE
POTTERVILLE, MI 48876

Date: 9/07/2012 Page: 1

Steel: 304

Finish: HRAP

Your Order: 8549519 NAS Order: AN 0534058 01

Corrosion: ASTM A262/02aE;180Bend-OK

PRODUCT DESCRIPTION:

STAINLESS STEEL CONT.MILL PLATE, HRAP; UNS 30400
ASTM A240/11b,A480/11b,A666/10;ASME SA240/11a,SA480/11a,SA666/11a
CHEM ONLY ON FOLLOWING ASTM: A276/10,A479/11,A484/11,A312/11
CHEM ONLY ON FOLLOWING ASME: SA312/11,SA479/11
AMS5513J XMRK; MIL-S-5059D AMEND3 (X CROWN MEAS)
NACE MR0175/ISO 15156-3:2003 A, MR0103/07;QQS766D-A X MRC PERM
MIN. SOLUTION ANNEAL TEMP 1900F, WATER QUENCHED

REMARKS:

Mat'l is Free of Mercury Contamination. No weld repairs.
EN 10204:2004 3.1; RoHS Compliant
Material is Free of Radioactive Contamination
NAS Steel Making Process: ELT, AOD, & Cont. Casting
Product Mfg.by a Quality Mgt.Sys. in Conf. w/ISO 9001
"Melted & Manufactured in the USA; Mat'l is DFARS Compliant

Product ID #	Coil #	Thickness	Width	Weight	--------Length--------		Mark	Pieces	EDP #
DC4096	* 01D7M2 D	.2500	48.0000	4,835	SHEET	96.000	11	15	18550800

CHEMICAL ANALYSIS

CM(Country of Melt) ES(Spain) US(United States) ZA(South Africa) JP(Japan)

Chemical analysis per ASTM A751/08

HEAT	CM	C %	CR %	CU %	MN %	MO %	N %	NI %	P %	S %
D7M2	US	.0447	18.1010	.4790	1.6595	.4270	.0593	8.0255	.0335	.0010
		SI %								
		.2960								

RECEIVED at
Alro Potterville
SEP 06 2012
by

MECHANICAL PROPERTIES

Product ID #	Coil #	Loc	Dir	UTS KSI	.2% YS KSI	ELONG %-2"	Hard RB	Tail Hard
DC4095	01D7M2 D	[illegible]	[illegible]	93.06	50.27	50.10	86.50	96.50

ALRO STEEL/METAL
RT86795529

Item 1 on 12-4007-6540
Outer Nozzle Plate

PO/SO#	119108/4007
DWG#	4007-6540.01
ITEM#	
DATE	2-18-13
DESC.	PLATE D2SC 6.03"OD x 4"4"THK SST 304

PHPK TECHNOLOGIES
QA APPROVAL KS
Plate

NAS hereby certifies that the analysis on this certification is correct. Based upon the results and the accuracy of the test methods used, the material meets the specifications stated. These results relate only to the items tested and this report cannot be reproduced, except in its entirety, without the written approval of NAS.

Technical Dept. Mgr. ERIC HESS 9/07/2012

NAS NORTH AMERICAN STAINLESS

METALLURGICAL TEST REPORT

6870 Highway 42 East
Ghent, KY 41045-9615
(502) 347-6000

Certificate: 784211 04

Customer: 0570 013

Mail To:
ALRO METALS SERVICE CENTER
ALRO GROUP
P.O. BOX 927
JACKSON, MI 49204-0927

Ship To:
ALRO METALS SERVICE CENTER
CUSTOMER PICKUP
5620 CHURCHMAN AVENUE
INDIANAPOLIS, IN 46203

Date: 11/05/2012 Page: 1

Steel: 304

Finish: 2B

Your Order: 8632149 NAS Order: AN 0540809 01

Corrosion: ASTM A262/02aE;180Bend-OK

PRODUCT DESCRIPTION:

STNLESS STEEL SHEET, C.R., ANNEALED & PICKLED; UNS30400
ASTM A240/11b,A480/11b,A666/10;ASME SA240/11a,SA480/11a,SA666/11a
CHEM ONLY ON FOLLOWING ASTM: A276/10,A479/11,A484/11,A312/11
CHEM ONLY ON FOLLOWING ASME: SA312/11,SA479/11
AMS 5513J XMRK; MIL-S-5059D AMEND3 (X CROWN MEAS)
NACE MR0175/ISO 15156-3:2003 A, MR0103/07;QQS766D-A X MAG PERM
MIN. SOLUTION ANNEAL TEMP 1900F, WATER QUENCHED

REMARKS:

Mat'l is Free of Mercury Contamination. No weld repairs.
EN 10204:2004 3.1; RoHS Compliant
Material is Free of Radioactive Contamination
NAS Steel Making Process: EAF, AOD, & Cont. Casting
Product Mfg.by a Quality Mgt.Sys. in Conf. w/ISO 9001
*Melted & Manufactured in the USA; Mat'l is DFARs Compliant

Product ID #	Coil #	Thickness	Width	Weight	--------Length-------		Mark	Pieces	EDP #
DD0907	* 03E3T5 D	.1200	36.0000	4,960	SHEET	96.000	11	42	14816540

CHEMICAL ANALYSIS

CM(Country of Melt) ES(Spain) US(United States) ZA(South Africa) JP(Japan)

Chemical analysis per ASTM A751/08

HEAT	CM	C %	CR %	CU %	MN %	MO %	N %	NI %	P %	S %
E3T5	US	.0452	18.3390	.4035	1.6420	.3010	.0593	8.0015	.0310	.0010

SI %
.3205

ALRO STEEL/METAL
RT06756757

MECHANICAL PROPERTIES

Product ID #	Coil #	Loc	Dir	UTS KSI	.2% YS KSI	ELONG %-2"	Hard RB	Tail Hard
DD0907	03E3T5 D	F	T	95.92	50.21	51.54	88.00	87.50

ALRO STEEL CORP.
INDIANAPOLIS
NOV 6 2012
RECEIVED
SUBJECT TO COMPL INSP.

PO/SO#	11879V / 4007	PHPK TECHNOLOGIES
DWG#	4007-PPR 01 01	
ITEM#		
DATE	2-22-13	QA APPROVAL KB
DESCRIP	1-GAO 11"00 x 1063.	

NAS hereby certifies that the analysis on this certification is correct. Based upon the results and the accuracy of the test methods used, the material meets the specifications stated. These results relate only to the items tested and this report cannot be reproduced, except in its entirety, without the written approval of NAS.

Technical Dept. Mgr. ERIC HESS 11/05/2012

NAS NORTH AMERICAN STAINLESS

METALLURGICAL TEST REPORT

6870 Highway 42 East
Ghent, KY 41045-9615
(502) 347-6000

Certificate: 793415 02

Customer: 0570 014

Mail To:
ALRO METALS SERVICE CENTER
ALRO GROUP
P.O. BOX 927
JACKSON, MI 49204-0927

Ship To:
ALRO METALS SERVICE CENTER
CUSTOMER PICKUP
5859 ALRO PARK DRIVE
POTTERVILLE, MI 48876

Date: 12/11/2012 Page: 1

Steel: 304/304L

Finish: ERAP

Sales Order: [illegible]

PRODUCT DESCRIPTION:

STAINLESS STEEL COIL, MILL PLATE, ERAP; UNS S30100/S30103
[illegible] 210,A480,[illegible],A666/10,ASME SA240/11a,SA666/11a,SA480/11a
[illegible] ONLY ON FOLLOWING ASTM: A276/10,A479/11,A484/11,A580/11
[illegible] ONLY ON FOLLOWING ASTM: A276/11,A479/11
[illegible] 2016-5029; AMS2(R CRM MDR3); MIL-[illegible]
[illegible] 9175/ISO 15156-3:2003 A, MR0103/07;[illegible] X MAG PERM
MIN. SOLUTION ANNEAL TEMP 1900F, WATER QUENCHED

REMARKS:

Mat'l is Free of Mercury Contamination. No weld repairs.
EN 10204:2004 3.1, RoHS Compliant
Material is Free of Radioactive Contamination
NAS Steel Making Process: EAF, AOD, & Cont. Casting
Product Mfg.by a Quality Mgt.Sys. in Conf. w/ISO 9001
Melted & Manufactured in the USA; Mat'l is DFARs Compliant

Product ID #	Coil #	Thickness	Width	Weight	--------Length-------		Mark	Pieces	EDP #
DD4118	* 0327N7 C	.3750	60.0000	3,975	SHEET	120.00	11	9	18552847

CHEMICAL ANALYSIS

CM(Country of Melt) ES(Spain) US(United States) ZA(South Africa) JP(Japan)

Chemical analysis per ASTM A751/08

HEAT	CM	C %	CR %	CU %	MN %	MO %	N %	NI %	P %	S %
E7N7	US	.0212	18.1295	.3005	1.7755	.2495	.0709	8.0445	.0310	.0010

SI %
.2460

MECHANICAL PROPERTIES

Product ID #	Coil #	Loc	Dir	UTS KSI	.2% YS KSI	ELONG %-2"	Hard RB	R of A %
DD4118	0327N7 G	F	T	91.78	54.57	52.91	90.00	67.90

PO/SO#	119108 / 4007
DWG#	4007-165 25-01
ITEM#	
DATE	2-18-13
DESC.	PLATE DZIC 6.625"-4 x [illegible]

RHPK TECHNOLOGIES
QA APPROVAL

ALRO STEEL/METAL
RT06887783

RECEIVED at Alro Potterville
DEC 12 2012
by _____

NAS hereby certifies that the analysis on this certification is correct. Based upon the results and the accuracy of the test methods used, the material meets the specifications stated. These results relate only to the items tested and this report cannot be reproduced, except in its entirety, without the written approval of NAS.

Technical Dept. Mgr. ERIC HESS 12/11/2012

METALLURGICAL TEST REPORT

NAS
6870 HIGHWAY 42 EAST

NORTH AMERICAN STAINLESS
6870 HIGHWAY 42 EAST
GHENT, KY 41045

Certificate: 802460 2

Customer: 000570 014

Mail To:
ALRO METALS SERVICE CENTER
ALRO GROUP
P.O. BOX 927
JACKSON, MI 49204-0927

Ship To:
ALRO METALS SERVICE CENTER
CUSTOMER PICKUP
5859 ALRO PARK DRIVE
POTTERVILLE, MI 48876

Date: 1/16/2013 Page: 1

Steel: 304

Finish: 2B

Your Order: 8744883

NAS Order: WN 0037420 01

Corrosion: ASTM A262/02aE;180Sond-OK

PRODUCT DESCRIPTION:

STAINLESS STEEL COIL,C.R. ANNEALED & PICKLED; UNS 30400
ASTM A240/11b,A480/11b,A666/10;ASME SA240/11a,SA480/11a,SA666/11a
CHEM ONLY ON FOLLOWING ASTM: A276/10,A479/11,A484/11,A312/11
CHEM ONLY ON FOLLOWING ASME: SA312/11,SA479/11
AMS 5513J XMRK; MIL-S-5059D AMEND3 (X CROWN MEAS)
NACE MR0175/ISO 15156-3:2003 A, MR0103/07;QQS766D-A X MAG PERM
MIN. SOLUTION ANNEAL TEMP 1900F, WATER QUENCHED

REMARKS:

Mat'l is Free of Mercury Contamination. No weld repairs.
EN 10204:2004 3.1; RoHS Compliant
Material is Free of Radioactive Contamination
NAS Steel Making Process: EAF, AOD, & Cont. Casting
Product Mfg.by a Quality Mgt.Sys. in Conf. w/ISO 9001
*Melted & Manufactured in the USA; Mat'l is DFARS Compliant
*Melted & Manufactured in the USA; Mat'l is DFARS Compliant

Product Id	Coil #	Skid #	Thickness	Width	Weight	-------Length------		Mark	Pieces	Commodity Code
02E8V4 BA	02E8V4 B		.1163	60.0000	5,235	SHEETS	144.00		18	14817240

CHEMICAL ANALYSIS

CM(Country of Melt) ES(Spain) US(United States) ZA(South Africa) JP(Japan)

Chemical Analysis per ASTM A751/08

HEAT	CM	C %	CR %	CU %	MN %	MO %	N %	NI %	P %	S %
E8V4	US	.0567	18.2105	.4130	1.6725	.3235	.0639	8.0670	.0320	.0010

SI %
.3295

ALRO STEEL/METAL
RT06940843

MECHANICAL PROPERTIES

Product Id#	Coil #	Id Loc	UTS KSI	.2% YS KSI	ELONG %-2"	Hard RB	Tail Hard
[illegible] BA	02E8V4 B		92.69	44.52	[illegible]	[illegible]	88.50

PO/SO#	119108/4007	PHPK TECHNOLOGIES
DWG#		
ITEM#		
DATE	2-18-13	QA APPROVAL KB
DESC.	SHEET 02SC 6.00" X 144 SST 304	

Pass

NAS hereby certifies that the analysis on this certification is correct. Based upon the results and the accuracy of the test methods used, the material meets the specifications stated. These results relate only to the items tested and this report cannot be reproduced, except in its entirety, without the written approval of NAS.

Technical Dept. Mgr. ERIC HESS 1/16/2013

Customer: JACRAC PO#:5819 SO#:CCH782 **MTR#:AECL1382195.GI**

Item:1.00060240304L#1 Bundle:260079I063 Heat#:260079I

Pg. 1/1

Aperam Inox América do Sul S.A.

aperam

Head Office: Av. Carandaí, nº 1115, 23º Andar - Centro - Belo Horizonte - MG - 30130-915 - Brazil
Plant: Praça 1º de Maio, nº 9 - Centro - Timóteo - MG - 35180-018 - Brazil
Branches: Av. Mercedes Benz, nº 1.420 - Distrito Industrial - Campinas - SP - 13054-750 - Brazil
Rodovia RSC 453, Km 2,2 - S/N - Distrito Industrial - Caxias do Sul - RS - 95110-650 - Brazil

QUALITY CERTIFICATE

Number: 1382195
APERAM Order: 72088204
Date: 15/10/2012
Invoice: 2544E12

Customer:
ARCELORMITTAL-STAINLESS INTL USA, L
98 FLORAL AVE
NEW PROVIDENCE NJ 07974
EUA
P.O.NR.: 789529 / L37091-S

Ship to:
TA CHEN INTERNATIONAL INC
5855 OBISPO AVENUE
LONG BEACH, CA
EUA

Steel grade: AISI 304L **Finish:** NR1- HOT ROLLED **Product:** PLATE
Dimensions: 25,40 mm x 1524 mm x 6096 mm - 1,000 in x 60,00 in x 240 I
Marks:

Chemical composition

Heat nr.	C %	Mn %	Si %	P %	S %	Cr %	Ni %	Mo %	Al %	Co %	Cu %	N PPM				
✓ 260079I	0,017	1,29	0,470	0,034	0,002	18,26	8,03	0,084	0,0014	0,150	0,1914	450				

Results

Test/Variable	U.M:	260079I063											
	Source:	260079I06											
		H	T	H	T	H	T	H	T	H	T	H	T
Tensile Strength	KSI		93,84										
Yield Strength 0.2%	KSI		48,15										
Elongation 2"	%		53,00										
Austenit Grain Size			07/06										
Hardness RB	HRB	87,90	87,90										
Oxalic Test		DUAL	0										
Net Weight	LB	8.2780											
Gross Weight	LB	8.4760											

Heat & Lot identification (U.M.): Ok
Surface quality / dimensions: Ok
Heat treatment: Minimun Solution anneal temp.1900 F

Standards:
ASME SA480/SA480M 10
DIN 50049 92
ASME SA240/SA240M 10
NACE MR0103 03
SAE AMS 5513H 04
ASTM A240/A240M 10B
DIN EN 10204-3.1 05
SAE AMS 5511H 03 07
ASTM A480/A480M 11B
ANSI/NAC MR0175 (ISO) 09

Remarks: MADE IN BRAZIL /// COUNTRY OF ORIGIN: "BRAZIL" /// COUNTRY OF MANUFACTURE: "BRAZIL" /// NO WELD REPAIRS /// DUAL CERTIFICATE AISI 304/AISI 304L /// ASTM A262 PRACTICE E

a) Free from mercury contamination.
b) Material free of contamination from radioactivity. (Guarantee while stored under responsibility of Aperam Inox América do Sul S.A.).
c) Certify that the results above are correct and in acc. with the specifications or accepted concession.
d) Quality management system certified acc to standard ISO 9001 - Certificate ABS QE Nº 30071.
e) Quality mangement system certified acc to standard ISO/TS 16949 - Certificate ABS QE Nº 38324.
f) Environmental management system certified acc to standard ISO 14001 - Certificate ABS QE Nº 65989.
g)Country of Melt: Brazil. Country of manufacture: Brazil.

Paulo Sérgio Ribeiro
Qualified Inspector
Aperam South America

PO/SO#	119111/4007
DWG#	
ITEM#	
DATE	2-19-13
DESC.	PLATE 1" THK 304

PHPK TECHNOLOGIES
QA APPROVAL

Plate

JACQUET NO.
- 12364

MWTR-6533 Item 1

* as HT# used for 12-4007-6538 Item 1 (1" THK x 18" OD)

161578
2 of 2

NAS NORTH AMERICAN STAINLESS

METALLURGICAL TEST REPORT

6870 Highway 42 East
Ghent, KY 41045-9615
(502) 347-6000

Certificate: 383578 01
Customer: 2830 009

Mail To:
ROLLED ALLOYS
5944 PRINCETON-GLENDALE RD.
CINCINNATI, OH 45246

Ship To:
ROLLED ALLOYS
5944 PRINCETON-GLENDALE RD.
CINCINNATI, OH 45246

Date: 1/18/2008 Page: 2
Steel: 304
Finish: 2B
Corrosion: ASTM A262/02aE;180Bend-CX

Your Order: C24144 NAS Order: AN 0383356 01

PRODUCT DESCRIPTION:

STAINLESS STEEL COIL, COLD ROLLED, ANNEALED AND PICKLED.
ASTMA240/07,480/06b,666/03,ASMESA240/04-A05,480/04-A05,SA666/04
QQS766D-A XMGPRM,AMS5511E/5513E XMRK&FN,MIL40433,AMD3,XCRNMEAS&FN
UNS S30403 / UNS S30400

REMARKS:

Mat'l Free of Mercury Contamination. No weld repairs.
EN 10204 3.1; QQS763F Cond A; RoHS Compliant
* Melted & Manufactured in the USA
Min Anneal Temp 1950F, Water Quench; AOD Melt Practice
EN 10204 3.1.B/DIN 50049; NACE MR0175/2001

ROLLED ALLOYS QUALITY ASSURANCE
APPROVED
DATE 12/30/08

Product ID #	Coil #	Thickness	Width	Weight	--------Length-------		Mark	Pieces
033HR6 D	* 033HR6 D	.0600	48.0000	6,970	COIL	738.40	11	1

CHEMICAL ANALYSIS

CN(Country of Melt) ES(Spain) US(United States) ZA(South Africa)

HEAT	CN	C	CO	CR	CU	MN	MO	N	NI	P
3HR6	US	.0219	.1669	18.4198	.4135	1.7031	.3487	.0801	8.2023	.0331
		S	SI							
		.0017	.3509							

MECHANICAL PROPERTIES

Product ID #	Coil #	Loc	Dir	UTS KSI	.2% YS KSI	ELONG %-2"	Hard RB	Tail Hard
033HR6 D	033HR6	F	T	99.97	58.30	41.65	91.00	89.00

NAS hereby certifies that the analysis on this certification is correct and the material meets the specifications stated.

QC ENGINEER ERIC HESS 6/30/2008

Po 107360
P/N 70-001-050
Nameplate Bracket

QA REVIEW
TB
PHPK TECHNOLOGIES

Weld Wire

TECHNIWELD

ROBINSON TECHNICAL SOUTHEAST, INC.
6205 Boat Rock Blvd.
ATLANTA, GA. 30336
404-699-9900
TOLL FREE 800-445-2152
FAX 404-699-7800

SPECIFICATION - AWS A5.9 CLASS: ER308L ACTUAL

SIZE: .045"X 36" 10 LB TUBES HEAT#:11 8442

CHEMICAL ANALYSIS

C	0.029	Mn	1.70
Si	0.59	S	0.011
P	0.027	Ni	9.17
Cr	19.70	Mo	0.16
Cu	0.23		

WE CERTIFY THAT THESE CHEMICAL TEST RESULTS ARE CORRECT AND CONFORM TO THE ABOVE AWS SPECIFICATIONS, AS CONTAINED IN THE RECORDS OF THE COMPANY.

CERTIFIED BY: EDDIE JOHNSON

PO/SO#	118064	PHPK TECHNOLOGIES
DWG#	ER 308L	
ITEM#		
DATE	10-19-12	QA APPROVAL AB
DESC.	FILLER METAL, .045" X 36" Lg.	