TECHNICAL APPENDIX FORM (TA5031) FOR PRESSURE VESSELS
PRESSURE VESSEL ENGINEERING NOTE PER CHAPTER 5031

Prepared by: Terry Tope
Preparation date: 1/5/15

1. Description and Identification
Fill in the label information below:

THIS VESSEL CONFORMS TO FERMILAB ES&H MANUAL CHAPTER 5031

Vessel Title: LArIAT Filter Vessel

Vessel Number: EN01781 ← **Obtain from Teamcenter**

Vessel Drawing No.: Eden Cryogenics LLC BC-02128-5800-01

Maximum Allowable Working Pressure (MAWP)

Internal Pressure: 165 psid

External Pressure: 15 psid

Working Temperature Range: +932 °F -320 °F

Contents: Liquid argon, BASF CU-0226S, Sigma Aldrich 4A mole sieve

Designer / Manufacturer: Eden Cryogenics LLC

Test Pressure (if tested at Fermilab) Acceptance Date _____ ← **Document per Chapter 5034 of the Fermilab ES&H Manual**

_____ PSIG, Hydraulic ____ Pneumatic ____

Accepted as conforming to standard by

_____ ← **Actual signature required**

Of Division / Section / Center NEUTRINO Date: 3/5/15

NOTE: Any subsequent changes in contents, pressures, temperatures, valving, etc., which affect the safety of this vessel shall require another review.

Reviewed by: Jay C Theilacker
(Print Name)

Signature: _____ Date: 3/3/15

Director's signature (or designee) if the vessel is for manned areas but doesn't conform to the requirements of the chapter.

Signature: _____ Date: _____

Amendment No.: Reviewed by: Date:

_____ _____ _____

_____ _____ _____

Lab Property Number(s):n/a_____
Lab Location Code: 426_____ (obtain from Safety Officer)
Purpose of Vessel(s): Remove oxygen and water from liquid argon_____
_____
Vessel Capacity/Size:22.5 gallon__ Diameter:12.75”____ Length: 51.5” _____
Normal Operating Pressure (OP) 55 psid_____
MAWP-OP = 165 – 55 = 110 PSI

List the numbers of all pertinent drawings and the location of the originals.

Drawing #	Location of Original
Eden Cryogenics LLC BC-02128-5800-01 ___	8445 Rausch Dr Plain City, OH 43064 _____
_____	_____
_____	_____
_____	_____
_____	_____
_____	_____

2. Design Verification

Is this vessel designed and built to meet the ASME BPVC or “Experiment Vessel” requirements?
Yes_X____ No_____.

If “No” state the standard that was used _____.
Demonstrate that design calculations of that standard have been made and that other requirements of that standard have been satisfied.
Skip to part 3 “system venting verification.”

Does the vessel(s) have a U stamp? Yes___X__ No__ ___. If "Yes", complete section 2A; if "No", complete section 2B.

A. Staple photo of U stamp plate below.
Copy "U" label details to the side

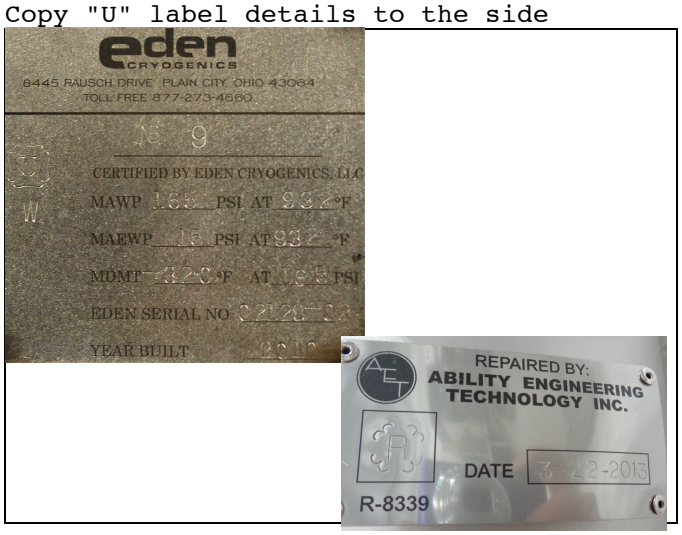

Copy data here:

NB 9

CERTIFIED BY EDEN CRYOGENICS LLC

MAWP 165 PSI AT 932 °F

MAEWP 15 PSI AT 932 °F

MDMT -320 °F at 165 PSI

EDEN SERIAL NO 02128-03

YEAR BUILT 2010

Provide ASME design calculations in an appendix. On the sketch below, circle all applicable sections of the ASME code per Section VIII, Division I. (Only for non-coded vessels)

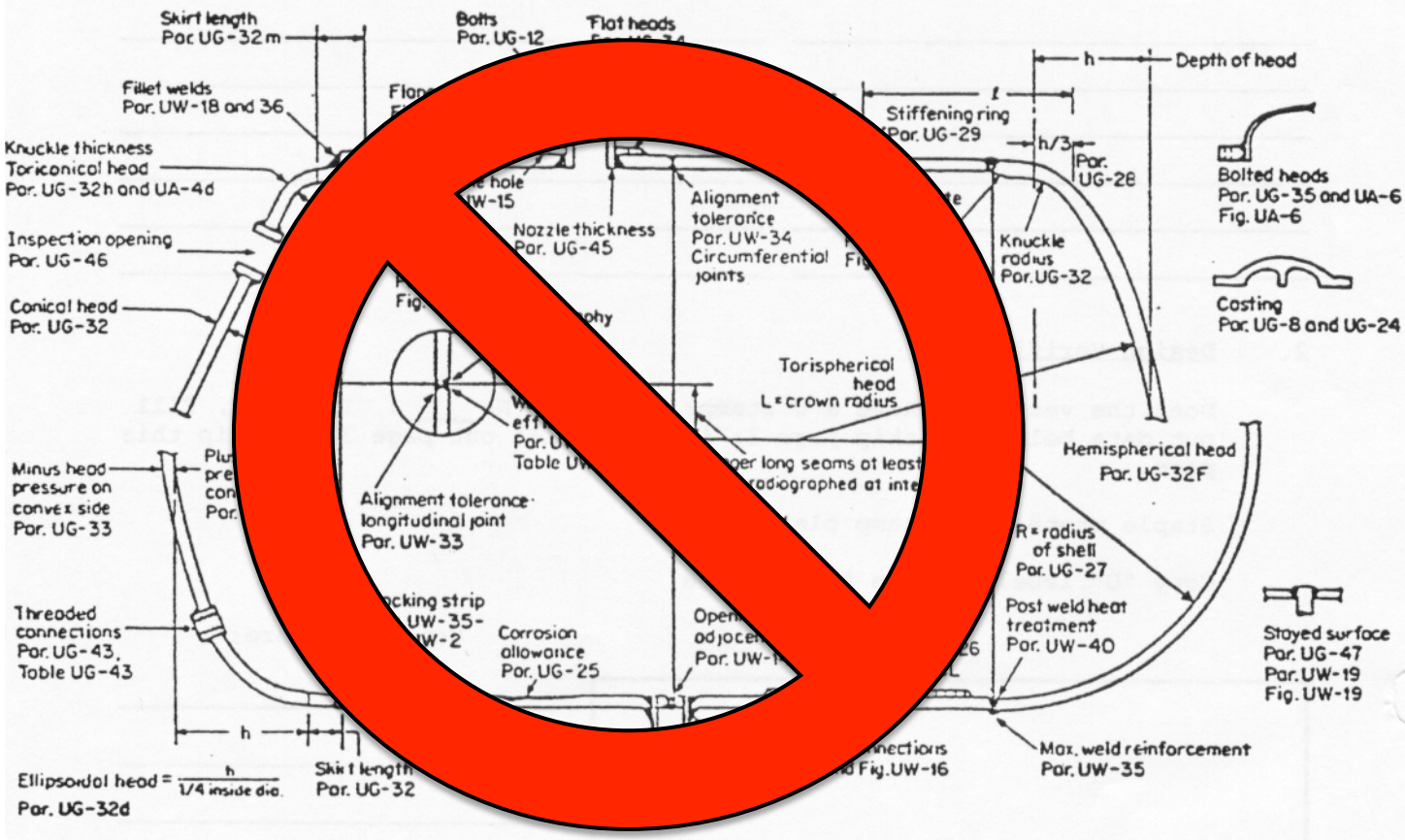

21

THE LAPD OXYGEN FILTER VESSEL IS A CODE STAMPED ASME VESSEL. THIS SECTION IS NOT REQUIRED.

Item	Reference ASME Code Section	CALCULATION RESULT (Required thickness or stress level vs. actual thickness calculated stress level)
_____	_____	_____ vs _____
_____	_____	_____ vs _____
_____	_____	_____ vs _____
_____	_____	_____ vs _____
_____	_____	_____ vs _____

3. System Venting Verification Provide the vent system schematic.

Does the venting system follow the Code UG-125 through UG-137?
Yes_X__ No___

Does the venting system also follow the Compressed Gas Association Standards S-1.1 and S-1.3?
Yes __X___ No_____

A "no" response to both of the two proceeding questions requires a justification and statement regarding what standards were applied to verify system venting is adequate.

List of reliefs and settings:

Manufacturer	Model #	Set Pressure	Flow Rate	Size
Rockwood Swendeman	710NBEF-A	100 PSIG	282 SCFM AIR	1 x 1 ¼ inch

4. Operating Procedure

Is an operating procedure necessary for the safe operation of this vessel?
Yes_____ No__X___ (If "Yes", it must be appended)

5. Welding Information

Has the vessel been fabricated in a non-code shop? Yes_____ No___X__
If "Yes", append a copy of the welding shop statement of welder qualification (Procedure Qualification Record, PQR) which references the Welding Procedure Specification (WPS) used to weld this vessel.

6. Existing and Unmanned Area Vessels

Is this vessel or any part thereof in the above categories?
Yes_____ No___X____

If "Yes", follow the requirements for an Extended Engineering Note for Existing and Unmanned Area Vessels.

7. Exceptional Vessels

Is this vessel or any part thereof in the above category?
Yes_____ No____X___

If "Yes", follow the requirements for an Extended Engineering Note for Exceptional Vessels.

THIS VESSEL CONFORMS TO FERMILAB ES&H MANUAL CHAPTER 5031

Vessel Title _____

Vessel Number _____

Vessel Drawing No. _____

Maximum Allowable Working Pressure (MAWP)

Internal Pressure _____

External Pressure _____

Working Temperature Range _____ ˚F _____ ˚F

Contents _____

Designer / Manufacturer _____

Test Pressure (if tested at Fermilab) Acceptance Date _____

_____ PSIG, Hydraulic _____ Pneumatic _____

Accepted as conforming to standard by

_____

Of Division / Section / Center _____

NOTE: Any subsequent changes in content, pressures, temperatures, valving, etc., which affect the safety of this vessel shall require another review and test.

Figure 2. Sample of sticker to be completed and placed on vessel.

ORIGINAL

FORM R-1 REPORT OF REPAIR

in accordance with provisions of the *National Board Inspection Code*

1. Work performed by ABILITY ENGINEERING TECHNOLOGY INC. (name of repair organization) — N/A (Form Registration No.)
   16140 South Vincenness Avenue SOUTH HOLLAND, ILLINOIS 60473 (address) — J 8410 (PO No., Job No., etc.)
2. Owner FERMI NATIONAL ACCELERATOR LABORATORY (name)
   P.O. Box 500 BATAVIA, ILLINOIS 60510 (address)
3. Location of installation FERMI NATIONAL ACCELERATOR LABORATORY (name)
   P.O. Box 500 BATAVIA, ILLINOIS 60510 (address)
4. Item identification Pressure Vessel (boiler, pressure vessel or piping) Name of original manufacturer EDEN CRYOGENICS
5. Identifying nos.: 02128-02 (mfg. serial no.) 9 (National Board No.) - (Jurisdiction No.) - (other) 2010 (year built)
6. NBIC Edition/Addenda: 2011 (edition) (addenda)

Original Code of Construction for Item: ASME B. & P.V. CODE SECTION VIII DIVISION 1 (name / section / division) 2010 (edition / addenda)

Construction Code Used for Repair Performed: ASME B &P.V. CODE SECT. VIII DIV. 1 (name / section / division) 2010 add 2011 (edition / addenda)

7. Repair Type: ☑ Welded ☐ Graphite Pressure Equipment ☐ FRP Pressure Equipment
8. Description of work: ☐ Form R-4, Report Supplementary Sheet is attached ☐ FFSA Form (NB-403) is attached
   (use Form R-4, if necessary)
   TOP AND BOTTOM HEADS REPLACEMENT
   WPS GT-P8-1C GTAW
   PNEUMATIC Pressure Test, if applied 252 psi MAWP 165 INT. / 15 EXT. psi
9. Replacement Parts. Attached are Manufacturer's Partial Data Reports or Form R-3s properly completed for the following items of this report:
   (name of part, item number, data report type or Certificate of Compliance, mfg. name, and identifying stamp)
10. Remarks:

CERTIFICATE OF COMPLIANCE

I, MAREK HABER, certify that to the best of my knowledge and belief the statements in this report are correct and that all material, construction, and workmanship on this Repair conforms to the *National Board Inspection Code.*

National Board "R" Certificate of Authorization No. R-8339 expires on 04/19/2014

Date 3/22/13, ABILITY ENGINEERING TECHNOLOGY INC. (name of repair organization) Signed Marek Haber (authorized representative)

CERTIFICATE OF INSPECTION

I, WADE A. SMITH, holding a valid Commission issued by The National Board of Boiler and Pressure Vessel Inspectors and certificate of competency, where required, issued by the Jurisdiction of ILLINOIS and employed by HSB-CT of HARTFORD CT have inspected the work described in this report on 3/22, 2013 and state that to the best of my knowledge and belief this work complies with the applicable requirements of the *National Board Inspection Code.*

By signing this certificate, neither the undersigned nor my employer makes any warranty, expressed or implied, concerning the work described in this report. Furthermore, neither the undersigned nor my employer shall be liable in any manner for any personal injury, property damage or loss of any kind arising from or connected with this inspection.

Date 3/22, 2013 Signed Wade A. Smith (inspector) Commissions NB12980ABN IL02259IC (National Board and Jurisdiction No.)

This form may be obtained from The National Board of Boiler and Pressure Vessel Inspectors, 1055 Crupper Ave., Columbus, OH 43229 NB-66 Rev. 12

REV	DESCRIPTION	DRAWN	DATE
		APPROVED	DATE
A	CORRECTED DESCRIPTIONS OF ITEMS 1 & 14	T.SPERRY	29-MAR-2012
		R.SANDERS	29-MAR-2012

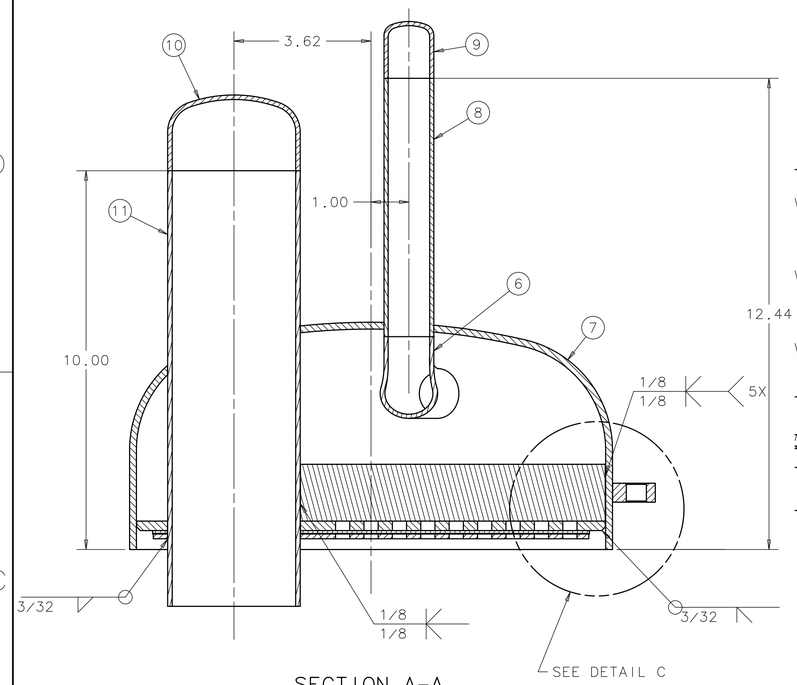

SECTION A-A

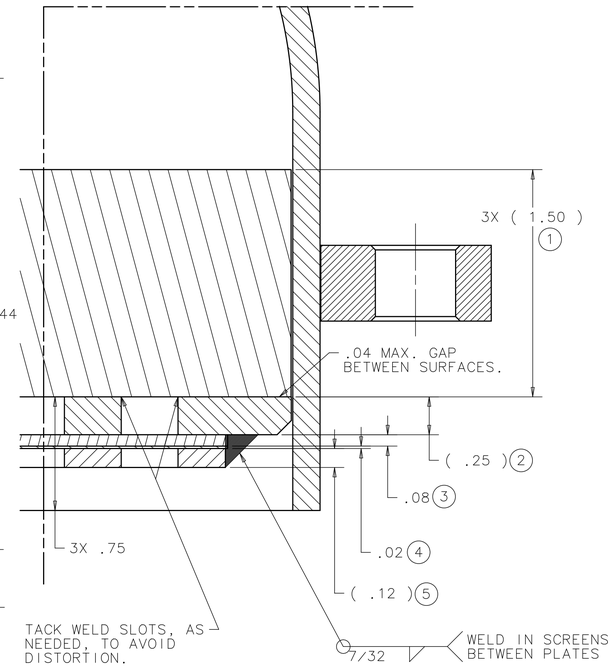

DETAIL C
SCALE 2:1

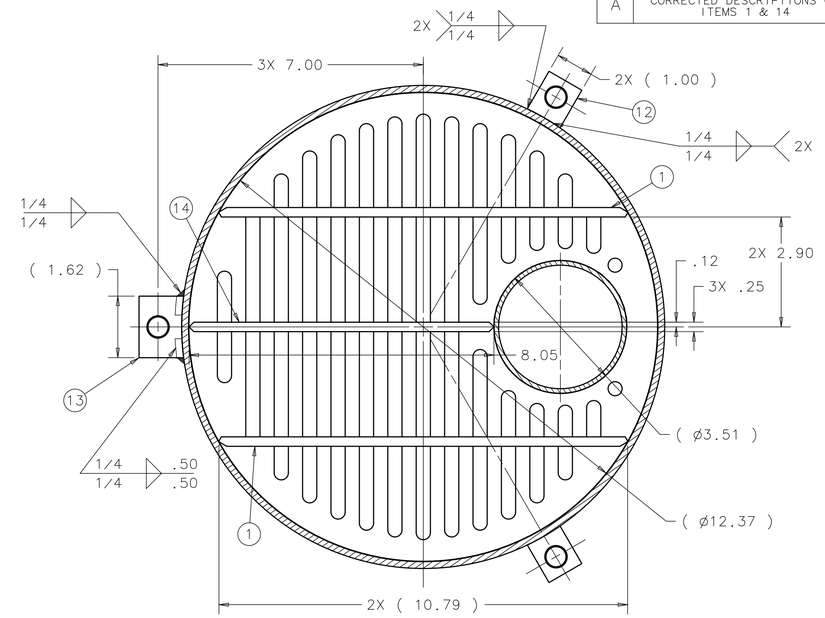

SECTION B-B

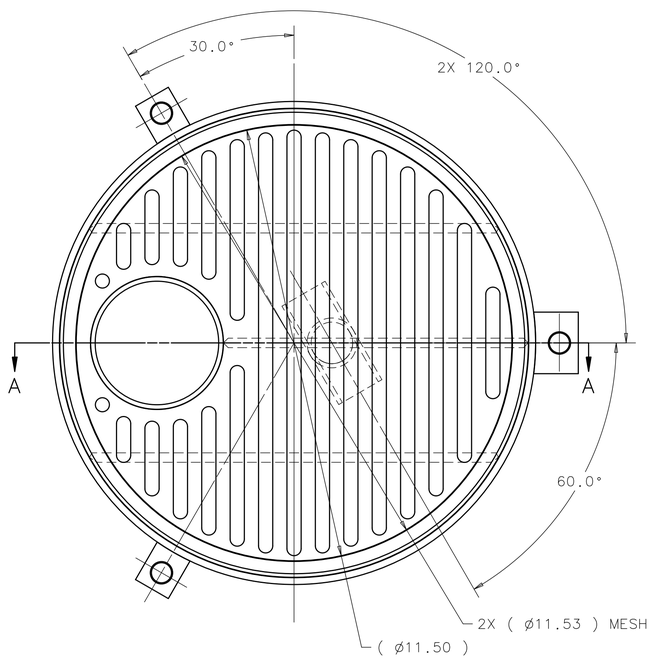

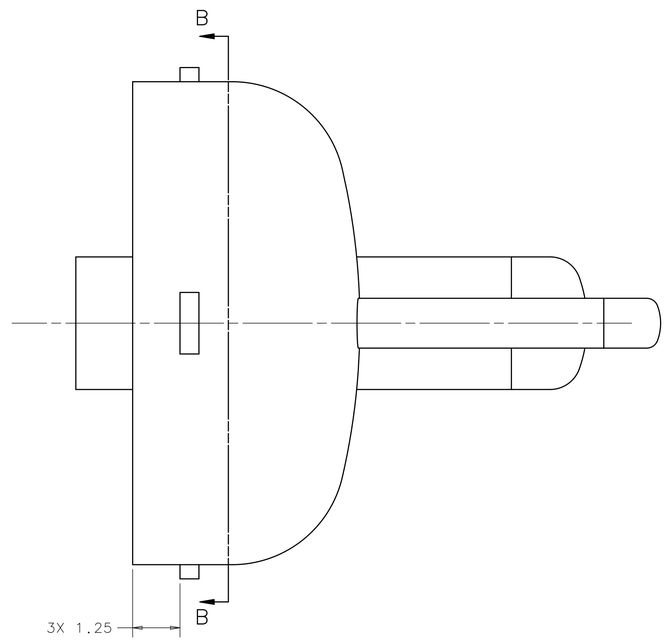

ITEM	PART NO.	DESCRIPTION OR SIZE	QTY.
14	COML.	RIB PLATE, .25 X 1.5 X 8.05 304 SST.	1
13	COML.	BRACKET, MODIFIED, 1.62 WIDTH, SIMILAR TO EDEN BC-02128-0124	1
12	COML.	BRACKET, EDEN BC-02128-0124	2
11	COML.	PIPE, 3 NPS., SCH 10, 304SST.	1
10	COML.	PIPE CAP, 3 NPS., SCH 10, 304SST.	1
9	COML.	PIPE CAP, 1 NPS, SCH 10, 304SST.	1
8	COML.	PIPE 1 NPS, SCH 10, 304 SST.	1

PARTS LIST

ITEM	PART NO.	DESCRIPTION OR SIZE	QTY.
7	COML.	PIPE CAP, 12 IPS, SCH. 10, 304 SST.	1
6	COML.	PIPE TEE, 1 NPS, SCH. 10, BUTT WELD, 304 SST.	1
5	COML.	PLATE, PERF., ø11.50 X .12 THK. 304 SST.	1
4	COML.	SCREEN60X60X.0075WIRE X11.53 O.D. 304 SST,MCMASTER#85385T425/EQUIV.	1
3	COML.	SCREEN 8X8X.035WIRE X 11.53 O.D. 304 SST,MCMASTER#85385T369/EQUIV.	1
2	COML.	PLATE, PERF., ø12.37 X .25 THK 304 SST.	1
1	COML.	RIB PLATE, .25 X 1.5 X 10.79 304 SST.	2

PARTS LIST

UNLESS OTHERWISE SPECIFIED			ORIGINATOR	T.TOPE	12-DEC-2011
.XX	.XXX	ANGLES	DRAWN	R.REINERT	16-JAN-2012
± .01	± ---	± 1°	CHECKED	W.CYKO	16-FEB-2012
			APPROVED	R.SANDERS	16-FEB-2012

1. BREAK ALL SHARP EDGES .02 MAX.
2. DO NOT SCALE DRAWING.
3. DIMENSIONS BASED UPON ASME Y14.5M-1994
4. MAX. ALL MACH. SURFACES 250
5. DRAWING UNITS: U.S.INCH

USED ON: ME-466500

MATERIAL: SEE PARTS LIST ABOVE

FERMI NATIONAL ACCELERATOR LABORATORY
UNITED STATES DEPARTMENT OF ENERGY

FLARE-MECHANICAL CRYOGENIC TPC20 LAR TOP FILTER MOD

SCALE	DRAWING NUMBER	SHEET	REV
1:2 & AS NOTED	3942.330-MD-489456	1 OF 1	A

CREATED WITH : Ideas12NXSeries | GROUP: PPD/MECHANICAL DEPARTMENT

NOTES (UNLESS OTHERWISE SPECIFIED):

1. SEE LAPD FILTER REPAIR SPECIFICATION FOR ADDITIONAL REQUIREMENTS.
2. NO MELTED SCREEN ALLOWED IN SLOT AREAS.

NOTICE: IMAGE OBTAINED FROM FERMILAB WEB SITE

This information is provided for REFERENCE use only. Not for MANUFACTURE, or DESIGN INFORMATION. All information contained in this document represents work sponsored by an agency of the U.S. Government. Neither the U.S. Government nor any agency thereof, nor Universities Research Association, Inc., nor any of their employees or officers, makes any warranty, express or implied, or assumes any legal liability or responsibility for the accuracy, completeness, or usefulness of any information, apparatus, product or process disclosed, or represents that its use would not infringe privately owned rights.

REV	DESCRIPTION	DRAWN	DATE
		APPROVED	DATE
A	CORRECTED DESCRIPTIONS OF ITEMS 1 AND 10	T.SPERRY	29-MAR-2012
		R.SANDERS	29-MAR-2012

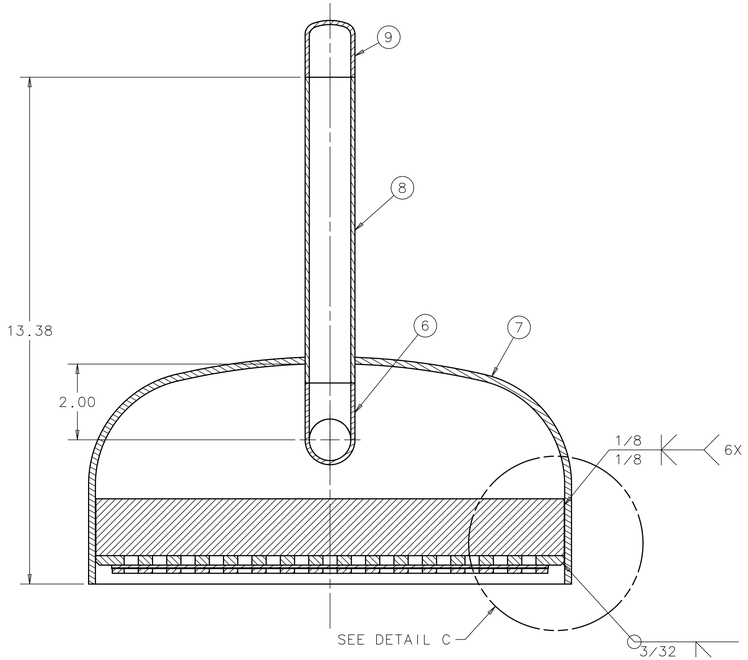

SECTION A-A

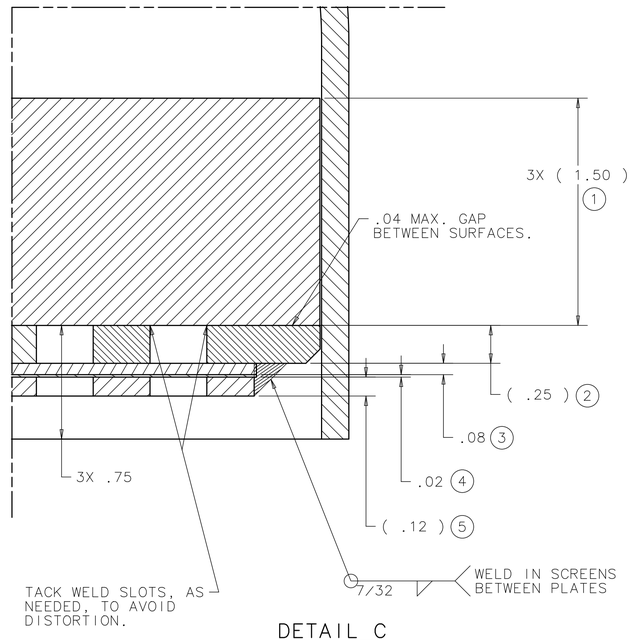

DETAIL C
SCALE 2:1

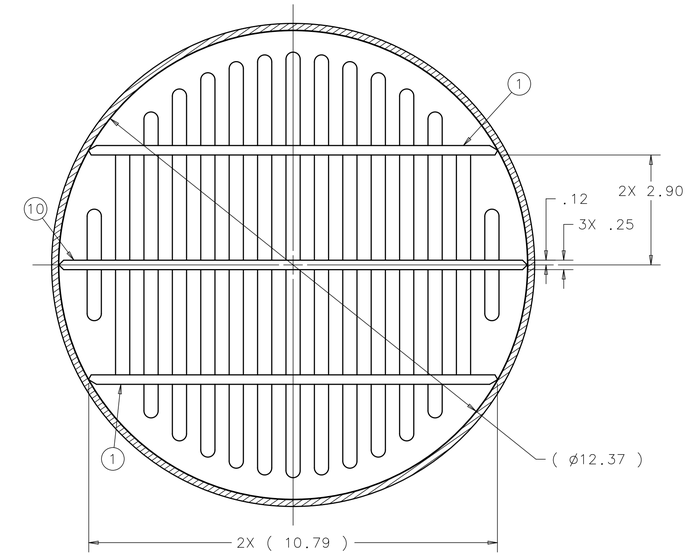

SECTION B-B

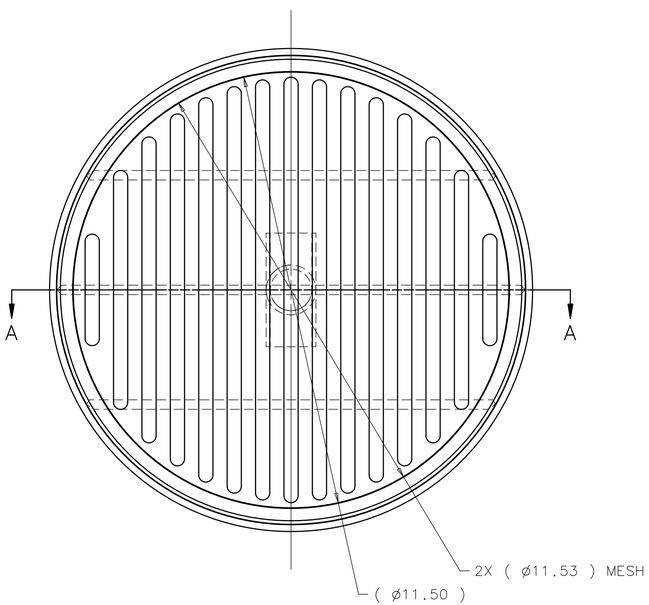

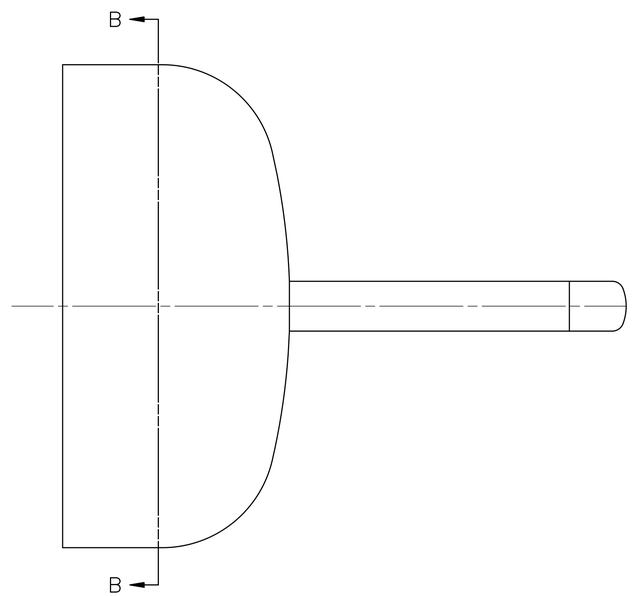

ITEM	PART NO.	DESCRIPTION OR SIZE	QTY.
10	COML.	RIB PLATE, .25 X 1.5 X 12.37 304 SST.	1
9	COML.	PIPE CAP, 1 IPS, SCH. 10, 304SST.	1
8	COML.	PIPE 1 IPS, SCH 10, 304 SST.	1

PARTS LIST

ITEM	PART NO.	DESCRIPTION OR SIZE	QTY.
7	COML.	PIPE CAP, 12 IPS, SCH. 10, 304 SST.	1
6	COML.	PIPE TEE, 1 NPS, SCH 10, 304 SST.	1
5	COML.	PLATE, PERF., ø11.50 X .12 THK. 304 SST.	1
4	COML.	SCREEN60X60X.0075WIRE X11.53 O.D. 304 SST,MCMASTER#85385T425/EQUIV.	1
3	COML.	SCREEN 8X8X.035WIRE X 11.53 O.D. 304 SST,MCMASTER#85385T369/EQUIV.	1
2	COML.	PLATE, PERF., ø12.37 X .25 THK 304 SST.	1
1	COML.	RIB PLATE, .25 X 1.5 X 10.79 304 SST.	2

PARTS LIST

UNLESS OTHERWISE SPECIFIED			ORIGINATOR	T.TOPE	12-DEC-2011
.XX	.XXX	ANGLES	DRAWN	R.REINERT	19-JAN-2012
± .01	± ---	± 1°	CHECKED	W.CYKO	17-FEB-2012
			APPROVED	R.SANDERS	17-FEB-2012

1. BREAK ALL SHARP EDGES .02 MAX.
2. DO NOT SCALE DRAWING.
3. DIMENSIONS BASED UPON ASME Y14.5M-1994
4. MAX. ALL MACH. SURFACES 250
5. DRAWING UNITS: U.S. INCH

USED ON: ME-466500

MATERIAL: SEE PARTS LIST ABOVE

FERMI NATIONAL ACCELERATOR LABORATORY
UNITED STATES DEPARTMENT OF ENERGY

FLARE-MECHANICAL CRYOGENIC TPC20 LAR BOTTOM FILTER MOD

SCALE	DRAWING NUMBER	SHEET	REV
1:2 & AS NOTED	3942.330-MD-489458	1 OF 1	A

CREATED WITH : Ideas12NXSeries | GROUP: PPD/MECHANICAL DEPARTMENT

NOTES (UNLESS OTHERWISE SPECIFIED):

1. SEE LAPD FILTER REPAIR SPECIFICATION FOR ADDITIONAL REQUIREMENTS.
2. NO MELTED SCREEN ALLOWED IN SLOT AREAS.

NOTICE: IMAGE OBTAINED FROM FERMILAB WEB SITE

This information is provided for REFERENCE use only. Not for MANUFACTURE, or DESIGN INFORMATION. All information contained in this document represents work sponsored by an agency of the U.S. Government. Neither the U.S. Government nor any agency thereof, nor Universities Research Association, Inc., nor any of their employees or officers, makes any warranty, express or implied, or assumes any legal liability or responsibility for the accuracy, completeness, or usefulness of any information, apparatus, product or process disclosed, or represents that its use would not infringe privately owned rights.

Relief Valve Sizing for the LArIAT Filter Vessel and Other Information Relevant to the Pressure Vessel Engineering Note

The LArIAT experiment located in upstream MC7 is using a filter vessel identical to two filter vessels which have been in service for 5 years in the LAPD liquid argon purification system located in PC4 which is shared by the LBNE 35T. The vessel consist of an ASME code stamped inner vessel surrounded by an outer vessel that is the vacuum jacket.

The following describes the history of the three filter vessels purchased for LAPD. It is likely of little interest to the peer reviewer of this note, it is documented in case this history is useful at some point in the future.

During the 1st LAPD run some filter material made it out of the filter vessels and into the piping. The filter material was contained within the filter vessels by sintered metal discs. The spare filter vessel that was never installed was examined by borescope (LAPD purchased 3 identical filter vessels – only two of which were put into service during the 1st LAPD run). The top sintered metal disc was found to have a small weld crack thru which filter material could leak out. This was not a pressure containment issue. It was assumed the installed filters had this same weld crack failure from the beginning and this was later confirmed. Both filter vessels were cut out of the LAPD piping. The repair consisted of cutting off both the top and bottom pressure vessel heads that contained the sintered metal discs. New heads were fabricated and welded on the vessel that contain screen between slotted plates instead of sintered metal discs. The screens provide particulate filtration while the slotted plates support the weight of the filter material and react the forces due to the pressure drop across the bed. The screen design is shown in FNAL drawings #489456 and #489458.

First the spare filter vessel was sent out for repair. This filter vessel was installed in place of the oxygen filter used during the 1st LAPD run. A new pressure vessel engineering note (with a unique vessel number) was created for this vessel which is identical to the original oxygen filter pressure vessel engineering note except that the repair is noted.

The filter which held the molecular sieve was sent out as the 2nd repair. Since this filter vessel will still be used to hold molecular sieve after the repair, the existing pressure vessel engineering note is amended (No. 1) to note the repair.

The vessel described by this pressure vessel engineering note is the original LAPD oxygen filter which has been repaired and moved to its new location in MC7. The repair design has been validated by the 2nd LAPD run and the 1st LBNE 35T run.

In this application the vessel contains a 50-50 mix of Sigma Aldrich 4A molecular sieve filter material and BASF CU-0226S oxygen filter material. CU-0226S is essentially a thin layer of copper covering a molecular sieve like substrate. The molecular sieve fraction of the filter bed is regenerated using heated argon gas and the oxygen filter fraction is regenerated using a blended mixture of heated argon gas and a purchased pre-mix of 2.5% hydrogen in argon (2.5% hydrogen in argon is considered non-flammable). Both filters will be heated to 200 ^{o}C (392 ^{o}F). The gas heaters are external to the filter vessels. The vessels will be used to purify liquid argon as the liquid argon flows form the supply tank outside MC7 to the cryostat located inside.

The pressure relief devices were sized according to the Compressed Gas Association's CGA S-1.3—2008 document. This document is entitled, "Pressure Relief Device Standards Part 3—Stationary Storage Containers for Compressed Gases." It is available as part of Fermilab's Techstreet subscription.

The basic vessel geometry is shown in Figure 1 and the manufacturer drawings are available in the appendix. The relief valve is set at 100 psig (115 psid to vacuum). This is below the vessel's code stamped MAWP of 150 psig (165 psid to vacuum).

Fire Condition (heat input calculation is identical to the two LAPD filter pressure vessel engineering notes)

First the fire condition is considered as it is more difficult to relieve than any other scenario. To begin the calculation, an estimate of the relief capacity required is computed. This number is then corrected for pressure drop and temperature rise in the line that leads to the reliefs if required. In CGA section 6.3.3 the following equation is used to calculate the minimum required flow capacity

$$Q_a = FG_iUA^{0.82}$$

where:

U = Overall heat transfer coefficient to the liquid, $\frac{Btu}{hr \cdot ft^2 \cdot {}^oF}$.

F = Correction factor for pressure drop and temperature rise in line to relief valve, specified in 6.1.4., 1.0 in initial calculation.

A = Average surface area of the inner and outer vessels (to be conservative the surface area of the outer vessel is used in all calculations).

G_i = Gas factor for insulated containers.

Q_a = Flow capacity required at applicable flow rating pressure and 60 ^{o}F in cubic feet per minute of free air.

The heat rate into the liquid is computed using SI units. All other calculations are performed in English units.

First the overall heat transfer coefficient to the liquid must be computed. For the fire condition it was assumed that the outer vessel is exposed to an environment that is at 922 K (1,660 ^{o}R) and the vacuum space between the inner and outer vessel has been filled with air at atmospheric pressure (air has a higher thermal conductivity than argon). For simplicity the vacuum jacket wall temperature is set to 922 K instead of computing a lower wall temperature based upon heat transfer from a 922 K ambient. The inner vessel wall will be at the saturation temperature of liquid argon at the flow rating pressure. The vacuum space contains six highly polished aluminum radiation shields. Aluminum radiation shields were chosen because both filter vessels are regenerated at 523 K which would destroy Mylar based super insulation. The relief valves are set at 100 psig (6.89 bar gauge). For the fire condition it must be ensured that the pressure does not exceed 121% MAWP. However the 100 psig (6.89 bar gauge) relief valve set point is below the vessel 150 psig (10.34 bar gauge) MAWP. Thus the flow rating pressure used is 1.10 x (100 + 14.7) - 14.7, or 111.5 psig (7.68 bar gauge). The saturation temperature of liquid argon at 111.5 psig is 114.3 K (205.7 ^{o}R).

Two heat transfer mechanisms are considered for the fire condition. The first mechanism is radiation exchange between the vacuum jacket, the aluminum shields, and the inner vessel. In parallel to radiation, convection thru air filling the vacuum space transfers heat to the liquid argon. Figure 2 details the heat transfer paths.

Several simplifying assumptions were made. The surface area A_s for all calculations was taken as the surface area of a cylinder (including the top and bottom) whose outside diameter matches the inner diameter of the vacuum jacket. This is conservative because the surface area of the radiation shields and the inner vessel (A_{inner}) is significantly less than that of the vacuum jacket.

$$A_s = \frac{\pi}{4}(D)^2 \times 2 + \pi DL = \frac{\pi}{4}(23.5\ in)^2 \times 2 + \pi \times 23.5\ in \times 75\ in = 6{,}404\ in^2 = 4.13\ m^2 = 44.48\ ft^2$$

The inner vessel has a surface area A_{inner} about 2.75x less than that of the vacuum jacket.

$$A_{inner} = \frac{\pi}{4}(D)^2 \times 2 + \pi DL = \frac{\pi}{4}(12.75\ in)^2 \times 2 + \pi \times 12.75\ in \times 52\ in = 2{,}338\ in^2 = 1.51\ m^2 = 16.24\ ft^2$$

The emissivity of the inner surface of the vacuum jacket and the outer surface of the pressure vessel was taken as 1.0. Incropera and Dewitt's Fundamentals of Heat Transfer, Fourth Edition, lists the emissivity of highly oxidized stainless steel as 0.70 at 1,000 K such that 1.0 may be conservative. The emissivity of each of the highly polished aluminum radiation shields was estimated as 0.1. Incropera and Dewitt give an emissivity of 0.06 for highly polished aluminum at 600 K.

All heat transfer equations were solved simultaneously in EES, the program is available in the appendix. Using the vacuum jacket ID temperature and the inner vessel OD temperature as inputs, EES computed the temperature of each radiation shield and the corresponding heat flow. Example calculations are provided below.

Radiation is modeled as exchange between large infinite parallel planes in the following manner where subscript eight indicates the inner vessel and subscript seven the innermost radiation shield. Below is an example radiation calculation:

$$qrad_{78} = \frac{A\sigma\left(T_7^4 - T_8^4\right)}{\frac{1}{\varepsilon_7} + \frac{1}{\varepsilon_8} - 1} = \frac{4.132\ m^2 \times \frac{5.67 \times 10^{-8}\ W}{m^2 \times K^4} \times \left(324.6^4 - 114.3^4\right) K^4}{\frac{1}{0.1} + \frac{1}{1} - 1} = 256.1\ W\ .$$

Thermal convection is modeled as cellular flow in a vertical cavity with different sidewall temperatures. Heat transfer thru the horizontal shields above the inner vessel will occur by conduction because the geometry is essentially a horizontal cavity heated from above. Thus using the convective heat transfer coefficients computed for the vertical cavity reasonably accounts for heat transfer in the horizontal portion above the inner vessel. Convective heat transfer thru the horizontal shields below the filter vessel is also accounted for using the heat transfer coefficients for the vertical cavity. A check of this assumption occurs in a later section.

For the gap between the inner vessel and the innermost radiation shield (T_8 *and* T_7), Incropera and Dewitt's equation 9.53 is used to compute the Nusselt number Nu_L.

$$Nu_L = 0.046 Ra_L^{1/3},\quad Ra_L = \frac{g\beta\left(T_7 - T_8\right)L^3}{\alpha\upsilon},\quad Nu_L = \frac{\bar{h}L}{k},\quad qconv = \bar{h}A_s\left(T_7 - T_8\right)$$

$$\begin{bmatrix} 1 < \frac{H}{L} < 40 \\ 1 < Pr < 20 \\ 10^6 < Ra_L < 10^9 \end{bmatrix}$$

where

Ra_L = Rayleigh number, dimensionless.

$\bar{h}$ = average heat transfer coefficient, W / (m^2 x K).

L = distance between the heated and cooled surfaces, 0.0794 m (3.125 in.) for the gap between the inner vessel and the innermost radiation shield. The gap between the radiation shields themselves and between the outermost radiation shield and the vacuum jacket is 0.009525 m (0.375 in.). These gaps were measured.

k = thermal conductivity of the air in the vacuum space, W / (m x K), evaluated for air at ambient pressure and the average temperature of the two enclosure surfaces T_f (average of T_7 and T_8) by EES.

H = vertical height of the cavity, 1.651 meters (65 inches).

Pr = Prandtl number, dimensionless (ratio of the momentum and thermal diffusivities), evaluated at the average temperature of the two enclosure surfaces (average of T_7 and T_8).

g = gravitational acceleration, 9.8 m/s^2.

β = volumetric thermal expansion coefficient, 1/K, computed as 1 / T_f.

α = thermal diffusivity, m^2/s, evaluated for air at ambient pressure and T_f by EES.

ν = kinematic viscosity, m^2/s, evaluated for air at ambient pressure and T_f by EES.

An example calculation is shown below:

$$Ra_{L78} = \frac{g\beta_{78}(T_7 - T_8)L_{78}^{\ 3}}{\alpha_{78}\upsilon_{78}} = \frac{9.8\ m}{s^2} \times \frac{1}{219.4\ K} \times \frac{(324.6 - 114.3)\ K}{1} \times \frac{0.07938^3\ m^3}{1} \times \frac{s}{0.00001209 m^2} \times \frac{s}{0.000009036 m^2} = 4.3 \times 10^7$$

$$Nu_{L78} = 0.046 Ra_{L78}^{1/3} = 0.064 \times \left(4.3 \times 10^7\right)^{1/3} = 16.12,\ \ \bar{h}_{78} = \frac{Nu_{L78} k_{78}}{L_{78}} = \frac{16.12}{1} \times \frac{0.0195\ W}{m \times K} \times \frac{1}{0.07938\ m} = 3.959 \frac{W}{m^2 \times K}$$

$$qconv_{78} = 3.959 \frac{W}{m^2 \times K} \times 4.132\ m^2 \times (324.6 - 114.3)\ K = 3{,}441\ W$$

$$\begin{bmatrix} 1 < \frac{H}{L} < 40, \frac{H_{78}}{L_{78}} = \frac{1.651\ m}{0.07938\ m} = 20.8 \\ 1 < Pr < 20,\ \ Pr_{78} = 0.75 \\ 10^6 < Ra_L < 10^9,\ \ Ra_{L78} = 4.3 \times 10^7 \end{bmatrix}$$

The correlation is applicable based on the *H / L* ratio and the Ra_L value, the Prandtl number is just out of the correlation's range.

The radiation and convection heat flows across each gap sum to a total heat flow that is equal across all gaps.

At the gap between the inner vessel and the first radiation shield the heat flow is computed as

$$qrad_{78} + qconv_{78} = q_{total} = 3{,}441\ W + 256.1\ W = 3{,}697\ W\ .$$

For the smaller gap between the radiation shields themselves and the outermost radiation shield and the vacuum jacket, equation 4.91 from the Handbook of Heat Transfer, 3rd Edition, is used to compute the Nusselt number Nu_L.

$$Nu_L = \left[1 + \left[\frac{0.0665 Ra_L^{\ 1/3}}{1 + \left(\frac{9{,}000}{Ra_L}\right)^{1.4}}\right]^2\right]^{1/2}, \quad \begin{bmatrix} 40 < \frac{H}{L} < 110 \\ Pr \approx 0.7 \\ Ra_L < 10^6 \end{bmatrix}$$

An example calculation is shown below where subscript two indicates the outermost radiation shield and subscript one the vacuum jacket:

$$Ra_{L12} = \frac{g\beta_{12}(T_1 - T_2)L_{12}^{\ 3}}{\alpha_{12}\upsilon_{12}} = \frac{9.8\ m}{s^2} \times \frac{1}{902.8\ K} \times \frac{(922 - 883.513)\ K}{1} \times \frac{0.009525^3\ m^3}{1} \times \frac{s}{0.0001423 m^2} \times \frac{s}{0.0001004 m^2} = 25.26$$

$$Nu_{L12} = \left[1 + \left[\frac{0.0665 Ra_{L12}^{\ 1/3}}{1 + \left(\frac{9{,}000}{Ra_{L12}}\right)^{1.4}}\right]^2\right]^{1/2} = \left[1 + \left[\frac{0.0665(25.26)^{1/3}}{1 + \left(\frac{9{,}000}{25.26}\right)^{1.4}}\right]^2\right]^{1/2} = 1,\ \bar{h}_{12} = \frac{Nu_{L12}k_{12}}{L_{12}} = \frac{1}{1} \times \frac{0.06241\ W}{m \times K} \times \frac{1}{0.00925\ m} = 6.552 \frac{W}{m^2 \times K}$$

$$qconv_{12} = 6.552 \frac{W}{m^2 \times K} \times 4.132\ m^2 \times (922 - 883.513)\ K = 1{,}042\ W$$

$$\begin{bmatrix} 40 < \frac{H}{L} < 110, \frac{H_{12}}{L_{12}} = \frac{1.651\ m}{0.009525\ m} = 173 \\ 1 < Pr < 20,\ Pr_{12} = 0.71 \\ Ra_L < 10^6,\ Ra_{L12} = 25.26 \end{bmatrix}$$

The Nusselt number is 1 which indicates conduction is the primary heat transfer mechanism across the smaller gaps between the radiation shields and between the outermost radiation shield and the vacuum jacket. The Rayleigh number of 25.26, which much less than the critical value of 1,708 at which buoyancy forces begin to over come viscous forces, suggests that in the horizontal gaps between the radiation shields below the inner vessel heat transfer occurs by conduction and thus the heat transfer coefficients calculated for the vertical radiation shield gaps are reasonable to use for the lower horizontal shields.

The corresponding radiation contribution across the gap between the vacuum jacket and the outermost radiation shield is:

$$qrad_{12} = \frac{A\sigma(T_1^4 - T_2^4)}{\frac{1}{\varepsilon_1} + \frac{1}{\varepsilon_2} - 1} = \frac{4.132\ m^2 \times \frac{5.67 \times 10^{-8}\ W}{m^2 \times K^4} \times (922^4 - 883.513^4)\ K^4}{\frac{1}{1} + \frac{1}{0.1} - 1} = 2{,}654.8\ W.$$

The total heat flow again sums to:

$$qrad_{12} + qconv_{12} = q_{total} = 2{,}655\ W + 1{,}042\ W = 3{,}697\ W.$$

For the CGA calculation this heat flow must be converted to an overall heat transfer coefficient to the liquid.

$$h = \frac{q}{A\Delta T} = \frac{3{,}697\ W}{4.132\ m^2(922 - 114.3)\ K} \times \frac{1}{1\ W}\frac{1\ J}{\sec} \times \frac{1\ Btu}{1055.06\ J} \times \frac{3600\ \sec}{hr} \times \frac{1\ m^2}{10.7639 ft^2} \times \frac{1\ K}{1.8\ R} = 0.195 \frac{Btu}{hr \times ft^2 \times {}^\circ F}$$

To calculate the initial estimate of the relief capacity needed, a gas factor, G_i, must be computed. From page 25 of the CGA S-1.3—2008, when the flow rating pressure is less than 40% of the critical pressure ($\frac{126.2\,psia}{705.4\,psia}\cdot 100 = 17.9\%$), the following is used to compute G_i.

$$G_i = \frac{73.4(1660 - T)}{CL}\sqrt{\frac{ZT}{M}}$$

where

L = Latent heat of product at flow rating pressure, 60.68 $\frac{Btu}{lb_m}$ for saturated conditions at 126.2 psia .

.

C = Constant for vapor related to ratio of specific heats ($k=c_p/c_v$) at standard conditions. *k* = 1.67 for Argon at 60 ^oF and 14.696 psia (from EES) which corresponds to *C* = 378 (Table 4 of CGA S-1.3—2008).

Z = Compressibility factor for saturated vapor at 126.2 psia

$$Z = \frac{Pv}{RT}, \qquad Z = \frac{126.2\frac{lbf}{in^2} \times 0.3685\frac{ft^3}{lb}144\frac{in^2}{ft^2}}{\frac{1545\frac{ft \times lbf}{lbmol \times {}^oR}}{39.948\frac{lb}{lbmol}} \times 205.7^oR} = 0.842\,.$$

T = Flow rating temperature, 205.7 ^oR.

M = Molecular weight of gas, 39.948 for argon.

v = specific volume, saturated vapor at flow rating pressure of 126.2 psia, 0.3685 $\frac{ft^3}{lb_m}$.

G_i is calculated to be $\frac{73.4(1660 - 205.7)}{378 \times 60.68}\sqrt{\frac{0.842 \times 205.7}{39.948}} = 9.69$.

The uncorrected volumetric flow rate was found to be

$$Q_{ae} = 1.0 \times 9.69 \times 0.195 \times 44.48^{0.82} = 42.4\frac{ft^3}{\min} \text{ of free air.}$$

The relief valve is attached to the cryostat thru several feet of piping, thus the correction factor *F* is calculated according to CGA section 6.1.4

$$F = \sqrt{\frac{P_i v_i}{Pv}}$$

where

P_i = Pressure at the inlet of the PRD in lb/in^2.

v_i = Specific volume at the inlet of the PRD in ft^3/lb.

P = Flow rating pressure, 126.2 psia.

v = Specific volume of the fluid being relieved at the flow rating pressure and temperature defined in 6.1.3, 0.3685 ft^3/lb for saturated argon vapor at 126.2 psia.

The mass flow rate is calculated using CGA equation 6.1.4 a)

$$W = \frac{Q_{ae}C}{18.35}\sqrt{\frac{M}{ZT}}$$

where

Q_{ae} = Calculated flow capacity using the applicable formula from 6.2, 6.3.2, or ***6.3.3*** with F = 1.0, 42.4 ft^3/min of free air.

W = Required mass flow rate of lading through the PRD in lb$_m$/hr of the fluid being relieved.

C = Constant for vapor related to ratio of specific heats (k=cp/cv) at standard conditions. k = 1.67 for Argon at 60 ^{o}F and 14.696 psia which corresponds to C = 378.

M = Molecular weight of the fluid, 39.948 for argon.

T = Temperature specified in 6.1.3, 205.7 ^{o}R for saturated argon vapor at 126.2 psia.

Z = Compressibility factor at the temperature specified in 6.1.3 and flow rating pressure, 0.842.

$$W = \frac{Q_{ae}C}{18.35}\sqrt{\frac{M}{ZT}} = \frac{42.4 \times 378}{18.35}\sqrt{\frac{39.948}{0.842 \times 205.7}} = 419.5\frac{lb_m}{hr}.$$

The temperature at the inlet of the PRD is computed from 6.1.4 b) where

$$T_i = 2145 - \frac{2145 - T_s}{e^{\frac{5.24DL}{WC_p}}}$$

T_i = Temperature at the inlet to the PRD during full flow conditions in degrees Rankine.

T_s = Temperature specified in 6.1.3 , 205.7 ^oR.

D = Outside diameter in inches of the line between the container and the PRD, 1.315 inches for the 1 inch SCH 10 pipe.

L = Length of piping between the container and PRD, 8 ft.

e = 2.71828, the base of natural logarithms.

W = Required mass flow rate of lading through the PRD, 419.5 lbm/hr.

C_p = Average specific heat at constant pressure of lading between T_s and 1660 ^oR, 0.1281 Btu/ (lbm x ^oR). This was found by fitting a curve to C_p data provided by the NIST Standard Reference Database 23, Version 8.0 and then numerically integrating the curve to find the average C_p value. The details are available in the appendix.

$$T_i = 2145 - \frac{2145 - T_s}{e^{\frac{5.24DL}{WC_p}}} = 2145 - \frac{2145 - 205.7}{e^{\frac{5.24\times1.315\times11}{419.5\times0.1281}}} = 1{,}672\ ^oR.$$

The pressure at the inlet of the relief valve is calculated using 6.1.4 c)

$$P_i = P - 3.36\times10^{-6}\frac{flW^2v}{d^5}$$

P_i = Pressure at the inlet of the PRD in lb/in^2.

P = Flow rating pressure, 126.2 psia.

f = Friction factor, calculated using the methods outline in Crane 410 11/2009 edition – see below calculations.

ℓ = Equivalent length of pipe in ft, calculated using the methods of Crane 410 – see below calculations.

W = Required mass flow through the PRD, 419.5 lbm/hr.

v = Specific volume of the fluid being relieved at the flow rating pressure and average temperature between T_i (1,672 ^oR) and T_s (205.7 ^oR), 2.002 ft^3/lb at 126.2 psia and 938.7 ^oR.

d = Internal diameter of the pipe, 1.097 inches for 1 inch SCH 10 pipe.

The path to the relief valve has 11 feet of straight pipe. In addition to the straight pipe it flows thru five elbows and the branch and run of two tees. Each elbow is a 1 inch SCH 10 short radius elbow which has a r/d of 1. Thus the K value for one bend is 20 x f_T from page A-30 of Crane 410. f_T is the friction factor in the zone of complete turbulence which is equal

to 0.02224 for clean commercial steel pipe with an inside diameter of 1.097 inches according to the plot on page A-26 of Crane 410.

Diverging flow thru the branch of a 90 degree tee has a *K* value of 60 x f_T and flow thru the run of a tee has a *K* value of 20 x f_T. A *K* value of 0.78 is included to account for entrance losses.

The resistance coefficient for straight piping is computed from Crane equation 2-4 which is

$$K = f\frac{L}{D}.$$

f is computed using the Colebrook equation which is Crane 410 equation 1-20

$$\frac{1}{\sqrt{f}} = -2.0\log\left(\frac{\varepsilon}{3.7D} + \frac{2.51}{R_e\sqrt{f}}\right).$$

The Reynolds number R_e is computed using Crane 410 equation 6-3 where the dynamic viscosity μ was calculated by EES to be 0.03523 centipoise at 126.2 psia and the average temperature between T_i and T_s of 938.7 ^{o}R.

$$R_e = 6.315\frac{W}{d\mu} = 6.315\frac{419.5}{1.097\times 0.03523} = 68{,}554.$$

ε, the absolute roughness, was estimated as 0.00015 using the data on Crane 410 page A-24 for commercial steel.

Using EES to solve the implicit equation Colebrook, *f* was computed as 0.02018 (see appendix for EES program).

Thus the total resistance between the vessel and the relief valve is computed as

$$K = 5\times 20 f_T + 20 f_T + 60 f_T + 0.78 + f\frac{L}{D} = 5\times 20\times 0.01321 + 20\times 0.01321 + 60\times 0.01321 + 0.78 + 0.2018\frac{11ft}{\frac{1.097\ in}{12\frac{in}{ft}}} = 5.585.$$

The equivalent length of straight pipe is then calculated as follows:

$$L = \frac{KD}{f} = \frac{5.584\times\frac{1.097\ in}{12\frac{in}{ft}}}{.02018} = 25.3\ ft$$

The inlet pressure drop is then calculated as

$$P_i = 126.2 - 3.36\times 10^{-6}\frac{flW^2v}{d^5} = \frac{0.02018\times 25.3\times 419.5^2\times 2.002}{1.097^5} = 126.2 - 0.380 = 125.819\ psia.$$

The specific volume of the vapor at the relief valve inlet conditions of 125.819 psia and 1,672 ^{o}R, v_i, is 3.572 ft^3/lbm.

The correction factor F is then calculated per 6.1.4 e).

$$F = \sqrt{\frac{P_i v_i}{Pv}} = \sqrt{\frac{125.819 \times 3.572}{126.2 \times 0.3685}} = 3.109$$

$$Q_{ae} = 3.109 \times 9.69 \times 0.195 \times 44.48^{0.82} = 132 \frac{ft^3}{\min} \; of\ free\ air.$$

The Rockwood Swendeman model 710NBEF-A relief valve protecting the cryostat has a discharge capacity of 282 cubic feet per minute of air at 10% overpressure beyond its 100 psig set point and thus should easily handle the fire case. Relief valve data available in the appendix.

Filter Bed and Screen Pressure Drop (identical to LAPD calculation)

As an additional check, pressure drop thru the filter bed and the screen used to retain the filter material is estimated to ensure that it is negligible. The fire case, which generates the largest mass flow rate, assumes a filter vessel full of liquid argon such that the saturated vapor generated due to this peak mass flow case does not have to travel the entire length of the filter bed to reach the relief valve. To be conservative pressure drop thru the filter beds is calculated assuming the argon gas has warmed from the flow rating temperature of 114.3 K to 300 K and its assumed that the all the vapor generated passes thru the entire filter bed.

The filter pressure drop equation is taken from Union Carbide Molecular Sieve literature which is available in the appendix.

$$\Delta P_{filter} = \frac{f_T C_t G^2 L}{\rho_{filter} D_p},$$

where

f_T = friction factor determined from the modified Reynolds's number of $\mathrm{Re}_{\mathrm{mod}} = \frac{D_p G}{\mu_{filter}}$ and plot in the Union Carbide Molecular Sieve literature

C_t = pressure drop coefficient determined from plot in Union Carbide literature for external void fraction of 0.37, 3.6 x 10^{-10}

W = argon mass flow rate, 419.5 lb/hr for the fire case

G = superficial mass velocity, $G = \frac{W}{A_{filter}} = \frac{419.5 \frac{lb}{hr}}{0.8373 ft^2} = 501.02 \frac{lb}{hr \cdot ft^2}$

A_{filter} = cross-sectional area of the filter, 0.8373 ft^2 (12.39 in. ID for 12 inch SCH 10 pipe)

μ_{filter} = argon gas viscosity, 0.05534 lb/(ft*hr) (argon gas at 80.3 ^{o}F and 126.2 psia)

D_p = effective particle diameter of filter material, D_p = 0.00336 ft. for oxygen filter material, D_p = 0.00666 ft. for molecular sieve material.

L = length of filter bed, 3.33 ft.

ρ_{filter} = argon gas density, 0.874 lb / ft^3 (argon gas at 80.3 ^{o}F and 126.2 psia)

The modified Reynolds number for each filter is

$$\mathrm{Re}_{\mathrm{mod},oxygen} = \frac{(.00336\,ft)}{0.05534\,\frac{lb}{ft\cdot hr}}\frac{501.02\,lb}{hr\cdot ft^2} = 30.4,\ \mathrm{Re}_{\mathrm{mod},molecular\ sieve} = \frac{(.00666\,ft)}{0.05534\,\frac{lb}{ft\cdot hr}}\frac{501.02\,lb}{hr\cdot ft^2} = 60.3.$$

Based on the modified Reynolds numbers, f_T is 2.55 the oxygen filter and 1.78 for the molecular sieve.

$$\Delta P_{oxygen} = \frac{2.55\times 3.6\times 10^{-10}\times 501.02^2\times 3.33}{0.874\times 0.00336} = 0.261\ psi$$

$$\Delta P_{molecular} = \frac{1.78\times 3.6\times 10^{-10}\times 501.02^2\times 3.33}{0.874\times 0.00666} = 0.092\ psi$$

Thus the pressure drop thru the filter beds themselves is negligible and in reality would likely be much lower due to colder vapor temperatures and the fact that not all of the vapor would have to pass thru the entire bed. In this application the filter material will mix such that the pressure drop calculated for the oxygen material is an upper limit.

Vapor generated during a relief event must pass thru the filter material retention screens. The screen is shown in FNAL drawing # 489456. The screen assembly consists of two slotted plates sandwiching two screens. Using ImageJ software the slot open area was calculated as 32 in^2 = 0.222 ft^2. Item 4 in drawing # 489456 will be referred to as screen 1 for calculation purposes and has a 60 x 60 mesh, 0.0075" wire diameter, 0.009" opening width, and 30.5% open area. Item 3 in drawing # 489456 will be referred to as screen 2 for calculation purposes and has a 8 x 8 mesh, 0.035" wire diameter, 0.09" opening width, and 51.8% open area.

The 5th edition of the Chemical Engineers' Handbook by Perry and Chilton has an equation for pressure drop thru screens on page 5-37. It states that flow thru a screen can be considered as flow thru a number of orifices or nozzles in parallel. It also notes that for a series of screens the over-all head loss is directly proportional to the number of screens in series and is not affected by either the spacing between successive screens or by their orientation with respect to one another.

Since the two screens are different sizes, the pressure drop will be calculated individually across each screen using equation 5-100 from the Chemical Engineers' Handbook.

$$\Delta h = \left(\frac{n}{C^2}\right)\left(\frac{1-\alpha^2}{\alpha^2}\right)\left(\frac{V^2}{2g_c}\right)$$

Δh = head lost, ft. of fluid flowing

n = number of screens in series, dimensionless, 1 because the screens are calculated individually

C = screen discharge coefficient, dimensionless,s C is a function screen Reynolds number N_{Re}

α = fractional free projected area of the screen, dimensionless, 0.305 for screen 1 and 0.518 for screen 2

V = superficial velocity ahead of screen, ft/sec

g_c = dimensional constant, 32.17 (lb.)(ft.)/((lb. force)(sec^2)

$$N_{\mathrm{Re}} = \frac{D_s V \rho}{\alpha \mu}$$

D_s = aperture width, 0.00075 ft. for screen 1 and 0.0075 ft. for screen 2

ρ = fluid density, 0.874 lb/ft^3 for argon gas at 126.2 psia and 80.3 ^{o}F

μ = fluid viscosity, 0.00001537 lb/ft-sec for argon gas at 126.2 psia and 80.3 ^{o}F

The superficial velocity ahead of the screen is calculated from the fire relief event mass flow rate and the open slot area

$$V = \frac{W}{\rho \times A_{screen}} = 419.5 \frac{lb}{hr} \times \frac{1\ hr}{3600\ sec} \times \frac{ft^3}{0.874 lb} \times \frac{1}{0.222\ ft^2} = 0.6 \frac{ft}{sec}.$$

The screen Reynolds number for screen 1 is

$$N_{\mathrm{Re}} = \frac{0.00075 \times 0.6 \times 0.874}{0.305 \times 0.00001537} = 83.9$$

and the screen Reynolds number for screen 2 is

$$N_{\mathrm{Re}} = \frac{0.0075 \times 0.6 \times 0.874}{0.518 \times 0.00001537} = 494$$

such that the screen discharge coefficient C is 0.7852 for screen 1 and 1.155 for screen 2 according to figure 5-44 Chemical Engineers' Handbook.

The pressure drop for screen 1 is then

$$\Delta h = \left(\frac{1}{0.7852^2}\right)\left(\frac{1-0.305^2}{0.305^2}\right)\left(\frac{0.6^2}{2 \times 32.2}\right) = 0.088\, ft = 0.088\, ft \times \frac{0.874\ lb}{ft^3} \times \frac{1 ft^2}{144\ in^2} = 0.0005\, psi$$

and for screen 2 is

$$\Delta h = \left(\frac{1}{1.155^2}\right)\left(\frac{1-0.518^2}{0.518^2}\right)\left(\frac{0.6^2}{2 \times 32.2}\right) = 0.011 ft = 0.011 ft \times \frac{0.874\ lb}{ft^3} \times \frac{1 ft^2}{144\ in^2} = 0.000067\, psi.$$

Thus the filter material retention screens are not a significant restriction during a relieving event.

Loss of Vacuum Condition

Because the fire condition includes atmospheric air in the vacuum space, the preceding fire calculation also indicates the relief capacity is more than adequate for an operational loss of insulating vacuum.

Vapor Generation Due to Filter Regeneration Gas Heaters

Two Omega model AHPF-122 gas heaters (HTR-412-A & HTR-416-A), mounted externally with respect to the filter vessel assembly, can heat argon or a non-flammable mixture of hydrogen/argon from room temperature to 200 C to regenerate the filters. The premixed hydrogen/argon is supplied by a tube trailer. The tube trailer supply is relieved by PSV-406-H set at 100 psig such that the hydrogen/argon regeneration gas supply cannot over pressurize the filter vessels. PSV-406-H is identical to the relief valves protecting the filter pressure vessel such that its capacity of 282 SCFM at 100 psig air exceeds the 150 SCFM capacity of the Matheson Model 3201 pressure regulator connected to the tube trailer, PRV-400-H. See appendix for regulator details.

Temperature of the Inner Vessel

Although the filter regeneration gas flow cannot over pressurize the vessels, it must also be shown that the code stamped upper temperature limit of +932 ^{o}F cannot be exceeded. In addition to PLC PID heater control, a hardwired temperature interlock on each heater protects the filter vessels (TE-417-A and TE-413-A). These are hardwired temperature interlocks that are independent of the PLC and drop the heater AC power if the measured temperature exceeds +572 ^{o}F. To restart the heater AC power the temperature must drop below +572 ^{o}F and a physical reset button must be pushed. Operational experience at LAPD has shown that the heaters are marginal with respect to reaching the desired +392 ^{o}F regeneration temperature such that exceeding the +932 ^{o}F rating of the inner vessel is not operationally possible.

Filling of the LArIAT Cryostat

Liquid argon used to fill the LArIAT cryostat will pass thru the filter vessels detailed in this pressure vessel note. The supply liquid argon tank has its primary reliefs set at 100 psig such that the MAWP of the filter cannot be exceeded.

Filter Vessel Vacuum Relief (identical to LAPD calculation)

The filter vessel is contained within its own insulating vacuum. Vacuum breaks prevent communication between the filter vessel insulating vacuum and any piping insulating vacuum. The parallel plate relief is installed without springs. According to Eden Cryogenics drawing BC-02128-0103 the outside diameter of the parallel plate top plate is 5.5 in^2, the thickness is 0.5 in, and the material 304 stainless, which has a density of 0.28 lb/in^3. The weight of the parallel plate top relief is

$$\frac{\pi}{4}\left(5.5^2\right) in^2 \times 0.5\ in \times \frac{0.28\ lb}{in^3} = 3.33\ lb.$$

Eden drawing BC-02128-5875 dimensions the sealing o-ring diameter as 4.137 inches. Thus the force required to lift the top plate is the weight of the plate divided by the internal area against which pressure acts:

$$\frac{3.33\ lb}{\frac{\pi}{4}\left(4.137^2\right) in^2} = 0.25\frac{lb}{in^2}.$$

Thus the cracking pressure of the parallel plate relief is 0.25 psi.

According to the CGA S-1.3—2008 5.4, the area of a vacuum relief in sq. in. should be 0.00024 in^2/lb of vessel water capacity. The density of water is about 8.34 lb/gal. The vacuum jacket volume is estimated as a cylinder of 24 inch SCH 10 pipe 75 inches tall (the displacement of the inner vessel is ignored).

$$\frac{\pi}{4}\left(23.5^2\right) in^2 \times 75\ in \times \frac{1 gal}{231\ in^3} \times \frac{8.34\ lb}{gal} = 1{,}174.5\ lb\ water\ capacity.$$

Thus the required vacuum relief area is

$$0.00024 \frac{in^2}{lb} \times 1{,}174.5\ lb = 0.28\ in^2.$$

The parallel plate is sits atop a 3 inch SCH 10 pipe. The vacuum relief flow area is

$$\frac{\pi}{4}\left(3.26^2\right) in^2 = 8.35\ in^2$$

which is much larger than the required 0.28 in^2 such that the vacuum jacket is adequately relieved according to CGA S-1.3—2008 5.4.

Condensation (identical to LAPD calculation)

The saturation temperature that corresponds to the relieving pressure of the liquid argon is 114.3 K. This temperature is above the boiling point of nitrogen (77.4 K) or oxygen (90.2 K) such that condensation of the major components of air will not occur.

At atmospheric pressure carbon dioxide deposits directly to a solid. Air contains about 388 ppm CO_2 by volume. The heat of sublimation of CO_2 is 199,000 J/kg. The density of CO_2 at standard conditions (70 ^oF & 14.7 psia) is 0.114 lb/ft^3. The air flow required to deposit CO_2 on the surface of the liquid argon vessel at a rate equal to the 3,697 W fire case heat load is calculated as follows

$$3{,}697 \frac{J}{s} \times \frac{kg_{CO_2}}{199{,}000\ J} \times \frac{2.2\ lb_{CO_2}}{1\ kg_{CO_2}} \times \frac{60\ s}{\min} \times \frac{ft^3_{CO_2}}{0.114\ lb_{CO_2}} \times \frac{1 ft^3_{air}}{338 \times 10^{-6}\ ft^3_{CO_2}} = 63{,}643 \frac{ft^3_{air}}{\min}.$$

It is not possible for 63,643 SCFM of air to flow into the vacuum jacket to provide CO_2 for this rate of sublimation.

The latent heat of condensation for water at 70 ^oF is 2,455,000 J/kg-K. At 70 ^oF saturated air contains 0.00109 lb of water per cubic foot of air. Thus to condense the moisture in air at a rate that corresponds to the fire case heat input requires an air flow of

$$3{,}697 \frac{J}{s} \times \frac{kg_{H_2O}}{2{,}455{,}000\ J} \times \frac{2.2\ lb_{H_2O}}{1\ kg_{H_2O}} \times \frac{60\ s}{\min} \times \frac{ft^3_{air}}{0.001086\ lb_{H_2O}} = 183 \frac{ft^3_{air}}{\min}.$$

Once the moisture is removed from the air in the 19 ft^3 vacuum jacket, there is no mechanism to displace stagnant dry air in the vacuum jacket with a 183 SCFM flow of fresh moist air.

Vent Pressure Drop for PSV-109-A

The relief valves for the filter vessel vents into the room.

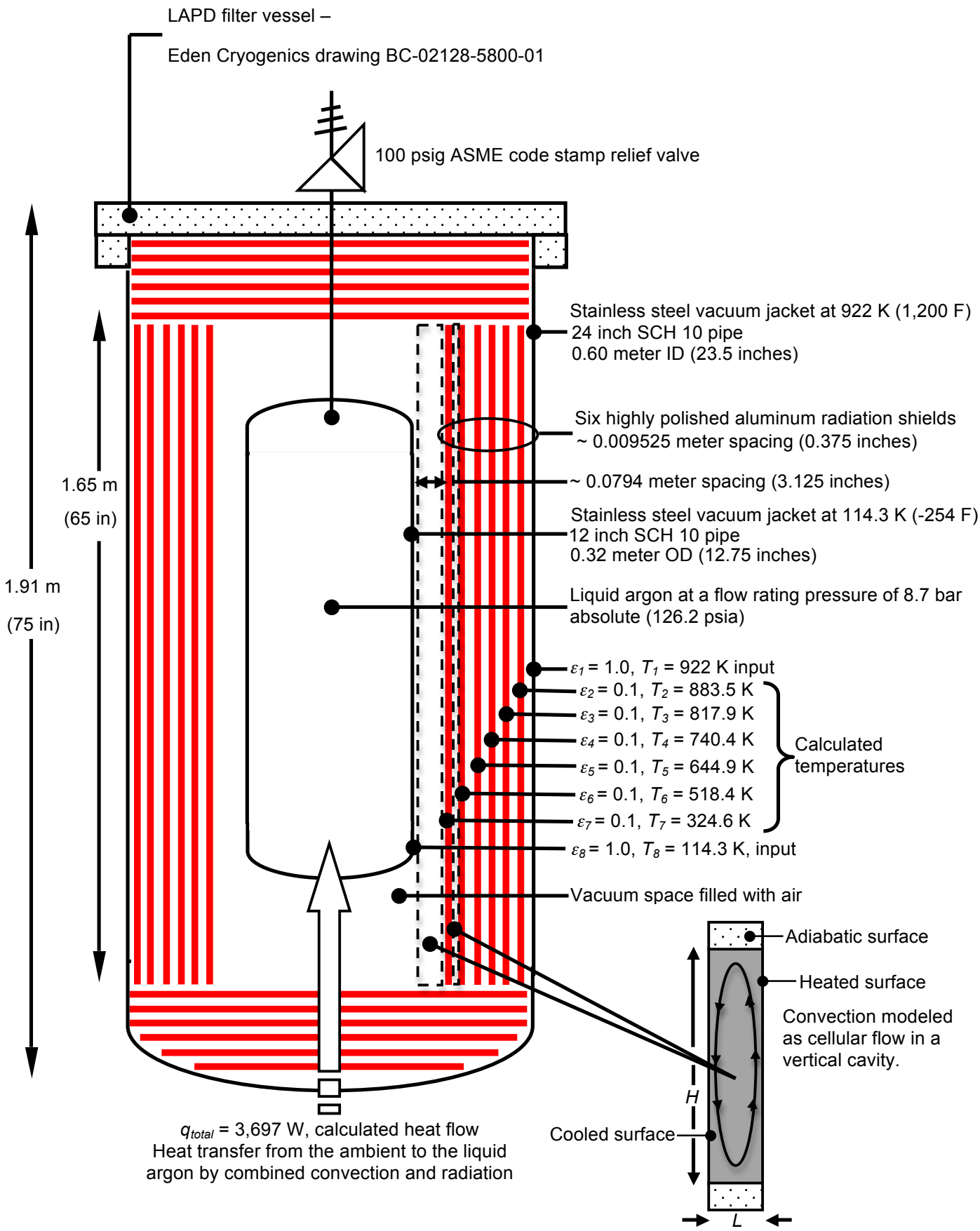

Figure 1: Dimensions, properties, and results for the fire case relief valve calculation.

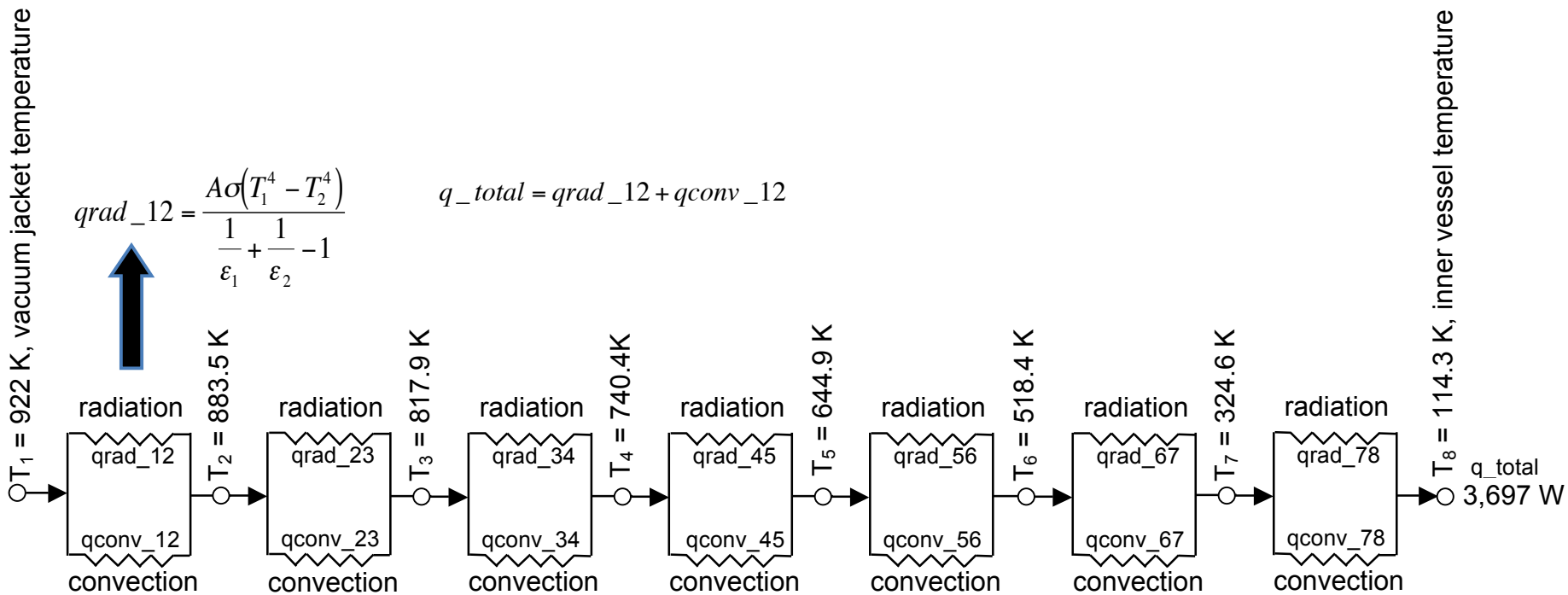

Figure 2: Heat transfer resistance network for the fire case.

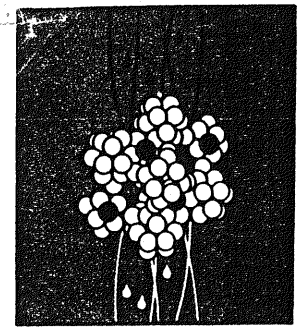

UNION CARBIDE MOLECULAR SIEVES

FIXED-BED PRESSURE DROP CALCULATIONS

UNION CARBIDE ADSORBENTS & CATALYSTS

WORKING EQUATION

The Ergun equation[a] for the calculation of pressure drop in adsorbent beds is in good agreement with numerous pressure drop measurements made in Union Carbide laboratories and on commercial adsorption units *for both gas phase and liquid phase operation.*

Use the following modified form of the equation to calculate pressure drop through Molecular Sieve beds:

$$\frac{\Delta P}{L} = \frac{f_t C_t G^2}{\rho D_p}$$

where:

C_t = pressure drop coefficient (ft) (sq hr)/(sq in)
D_p = effective particle diameter[b], ft.
f_t = friction factor
G = superficial mass velocity, lb/(hr) (sq ft)
L = distance from bed entrance, ft. (bed depth)
ΔP = pressure drop, psi
ρ = fluid density, lb/cu ft.

$\Delta P/L$ is the pressure drop per unit length of bed in psi/ft.

The friction factor, f_t is determined from the accompanying graph (page 3) which has f_t plotted as a function of modified Reynold's number.

Modified Re = $D_p G/\mu$

μ = fluid viscosity, lb/(hr) (ft)
[multiply centipoise by 2.42 to obtain lb/(hr) (ft)]

The pressure drop coefficient, C_t, is determined from the graph (page 3) which has C_t plotted as a function of external void fraction, ϵ.

The suggested values for ϵ and D_p for various sizes of LINDE Molecular Sieve are:

	ϵ	D_p
1/8-inch pellets	0.37	0.0122 ft.
1/16-inch pellets	0.37	0.0061 ft.
14x30 mesh granules	0.37	0.0033 ft.

(a) Ergun, S., Chem Engr Prog, *48*, 78 (1952)

(b) $D_p = \frac{D_c}{(2/3) + (1/3)(D_c/L_c)}$ where D_c is the particle diameter and L_c is the particle length

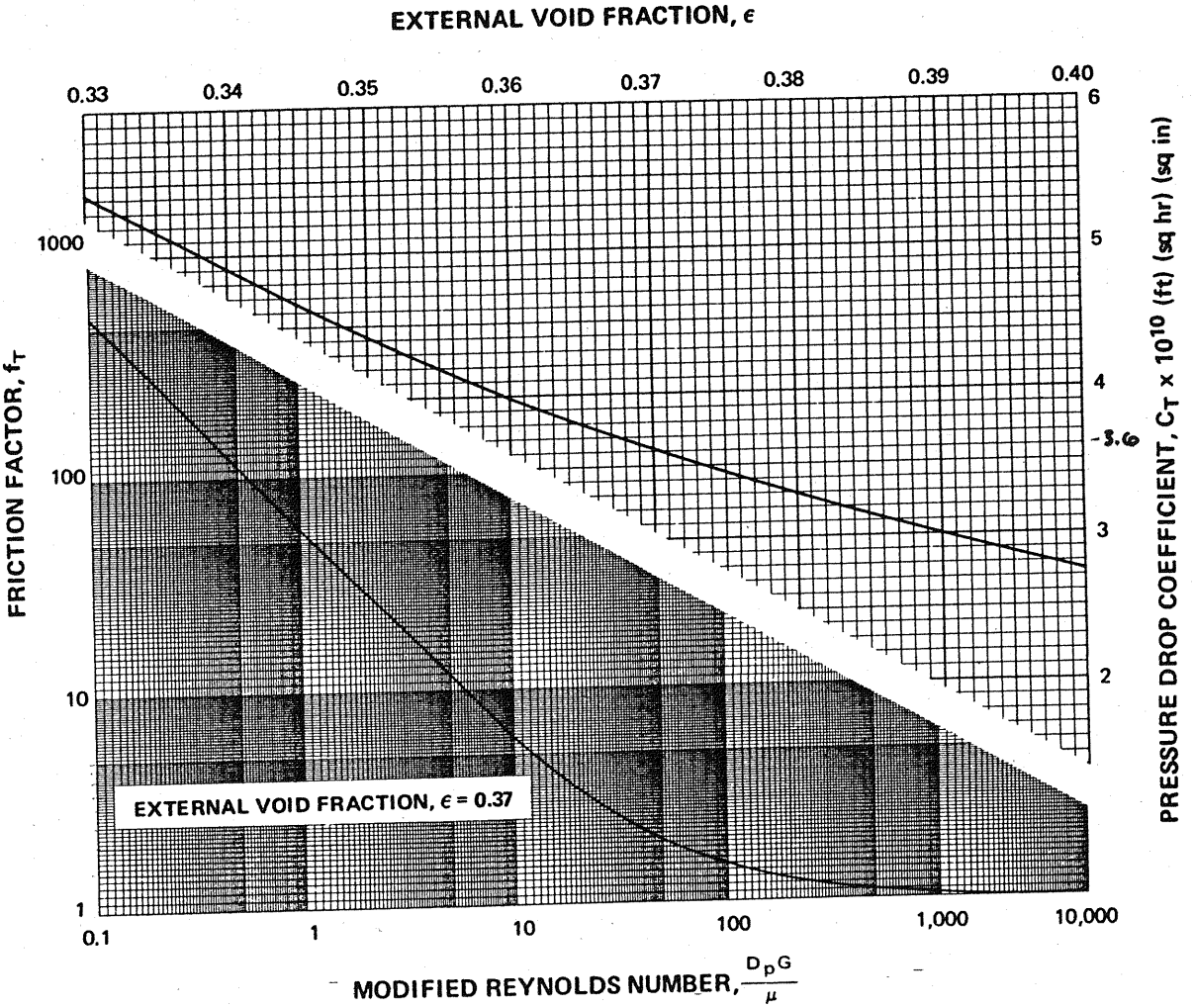

EXAMPLE

Determine the pressure drop through an 8 ft. diameter by 10 ft. deep bed of LINDE Molecular Sieve 1/16-inch pellets drying 55 MMSCFD of gas at 50°F and 420 psig. The gas has a molecular weight of 25, a viscosity of 0.010 cp, and a density of 2.0 lb/cu.ft. at operating conditions.

$$G = \frac{55 \times 10^6 \text{ SCFD}}{24 \text{ hrs/day}} \; \frac{25 \text{ lbs/mol}}{379 \text{ SCF/mol}} \; \frac{1}{\pi\,(8)^2/4 \text{ sq. ft.}} = 3000 \text{ lb/(hr) (sq.ft.)}$$

$$\text{Modified Re} = D_p G/\mu = \frac{(0.0061)\,(3000)}{(2.42)\,(0.010)} = 756$$

f_t (from figure) = 1.07

C_t (from figure for ϵ of 0.37) = 3.6×10^{-10}

$$\frac{\Delta P}{L} = \frac{(1.07)\,(3.6)\,(3000)^2\,(10^{-10})}{(2.0)\,(0.0061)} = \underline{0.28} \text{ psi/ft.}$$

For a bed depth of 10 ft.

$$\Delta P = (0.28)\,(10) = \underline{2.8} \text{ psi}$$

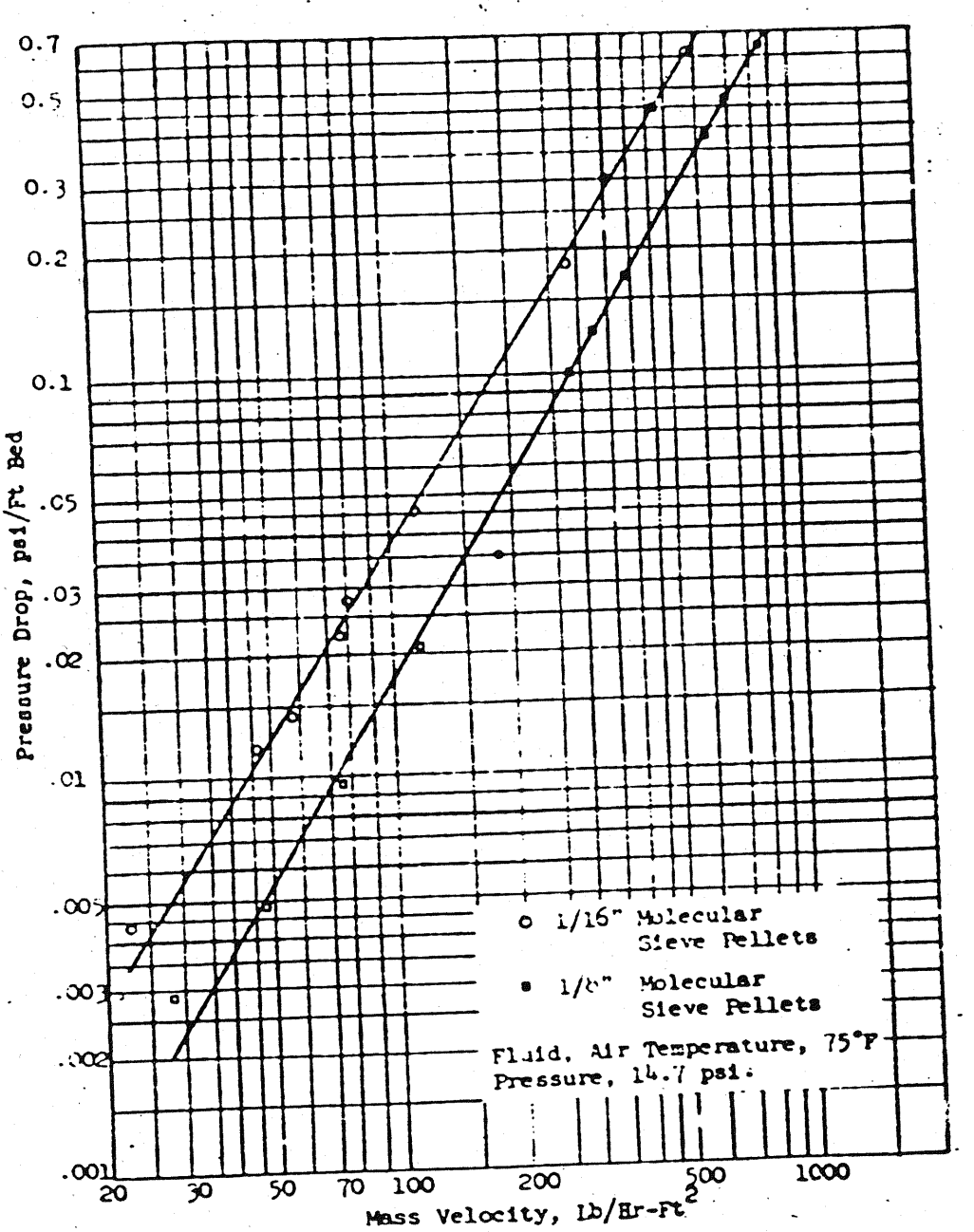

FIGURE 191

PRESSURE DROP THROUGH PACKED COLUMNS
6 INCHES OR MORE IN DIAMETER
(COURTESY OF THE LINDE CO.)

~~192~~

fig 1

For flow through a **curved pipe** or **coil**, a secondary circulation of fluid called the double-eddy or Dean effect takes place in a plane at right angles to the main flow. Because of this circulation the friction loss in the curved pipe is greater than in an equal length of straight pipe. This circulation also stabilizes laminar flow, thus

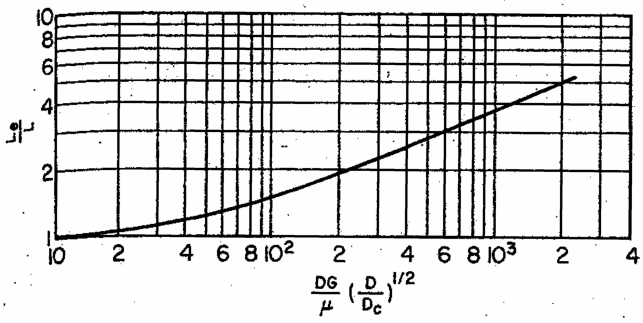

Fig. 5-43. Equivalent length for curved pipe in laminar flow. [*White, Proc. Roy. Soc. (London)*, **A123**, *645 (1929)*.] $\frac{Le}{L} = 1$ for $\frac{DG}{\mu}\left(\frac{D}{D_c}\right)^{1/2} < 10$.

increasing the critical Reynolds number. The maximum Reynolds number, or **critical Reynolds number**, for laminar flow as a function of pipe diameter and coil diameter is given by Srinivasan, Nandapurkar, and Holland [*Chem. Engr. (London)*, No. 218, CE113–CE119 (May, 1968)]:

$$(N_{Re})_{crit} = 2100\left(1 + 12\sqrt{\frac{D}{D_c}}\right) \tag{5-98}$$

for $10 < D_c/D < 250$, where $(N_{Re})_{crit} = (DG/\mu)_{crit}$ = critical Reynolds number, dimensionless; D = pipe diameter, ft.; D_c = coil diameter, ft.; G = mass velocity, lb./(sec.)(sq. ft.); μ = fluid viscosity, lb./(ft.)(sec.).

Total friction loss for laminar flow in curved pipe can be expressed in terms of an equivalent length L_e of straight pipe. Ratio of the equivalent to actual coil center-line length L_e/L is a function of the Dean number or $N_{Re}\sqrt{D/D_c}$ as shown in Fig. 5-43 (see also Srinivasan *et al., loc. cit.*). This curve is accurate to within ±5 per cent. A summary of published theoretical work plus their theoretical analysis of pressure drop in laminar flow in a coiled tube is given by Larrain and Bonilla [*Trans. Soc. Rheology*, **14**(2), 135–147 (1970)]. The **friction loss for turbulent flow** can be computed from the Fanning equation, Eq. (5-52), where for industrial helices the friction factor f_c is given by the empirically determined equation (see Srinivasan *et al., loc. cit.*):

$$f_c = 0.08N_{Re}^{-0.25} + 0.01\left(\frac{D}{D_c}\right)^{0.5} \tag{5-99}$$

Equation (5-99) is probably accurate within ±10 per cent.

The pressure drop for flow in **spirals** is discussed by Srinivasan *et al., loc. cit.*, and Ali and Seshadri [*Ind. Eng. Chem. Process Design Develop.*, **10**, 328–332 (1971)].

Screens. The flow through a screen can be considered as flow through a number of orifices or nozzles in parallel. Thus the pressure drop or head loss across a screen can be computed from an orifice-type equation. The resulting equation for head loss is

$$\Delta h = \left(\frac{n}{C^2}\right)\left(\frac{1-\alpha^2}{\alpha^2}\right)\left(\frac{V^2}{2g_c}\right) \tag{5-100}$$

where Δh = head loss, ft. of fluid flowing; n = number of screens in series, dimensionless; C = screen discharge coefficient, dimensionless; α = fractional free projected area of screen, dimensionless; V = superficial velocity ahead of screen, ft./sec.; g_c = dimensional constant, 32.17 (lb.)(ft.)/(lb. force)(sec.^{2}). Experimental data [Grootenhuis, *Proc. Inst. Mech. Engrs. (London)*, **A168**, 837–846 (1954)] indicate that for a series of screens the over-all head loss is directly proportional to the number of screens in series, as given by Eq. (5-100), and is not affected by either the spacing between successive screens or by their orientation with respect to one another.

Screen discharge coefficient C is a function of screen Reynolds number, $N_{Re} = D_s V\rho/\alpha\mu$, where D_s = aperture width, ft.; ρ = fluid density, lb./cu. ft.; μ = fluid viscosity, lb./(ft.)(sec.). For **plain square-mesh screens**, Lapple's plot of C vs. N_{Re} is given in Fig. 5-44 (courtesy of E. I. du Pont de Nemours & Co.). This curve represents most of the data to within ±20 per cent. Coefficients greater than 1 probably indicate that the effective free area is larger than that of the projected area and that there is partial recovery of head due to the downstream rounding of the wires.

A correlation of over-all frictional losses across plain square-mesh screens and sintered gauzes is given by Grootenhuis (*loc. cit.*). A correlation based on a packed-bed model for plain, twill, and "dutch" weaves is presented by Armour and Cannon [*Am. Inst. Chem. Engrs. J.*, **14**, 415–420 (1968)].

Baffles. For **segmental baffles**, such as tube-bundle baffles in heat exchangers, the over-all friction loss for **turbulent flow** can be

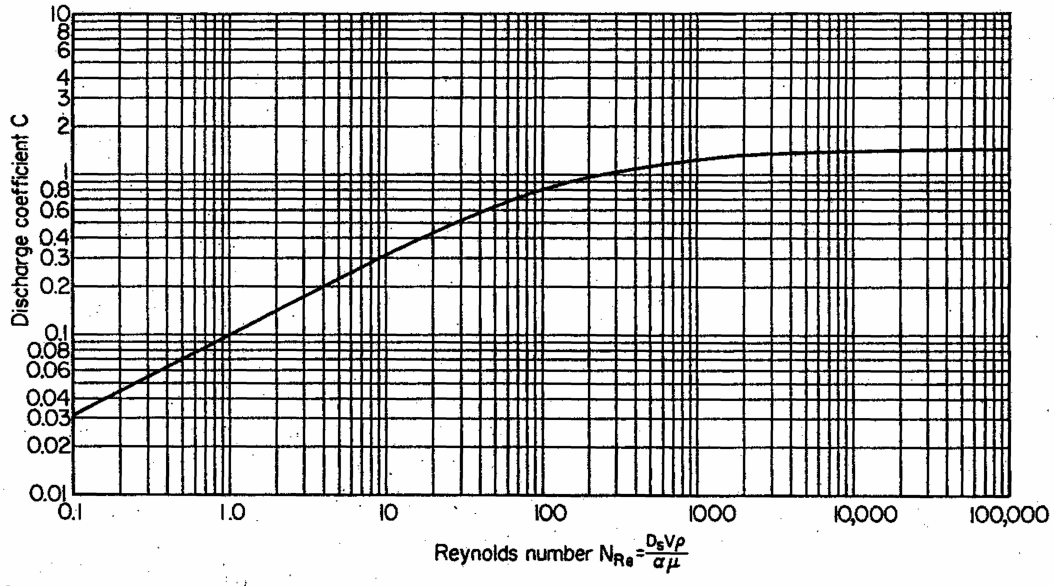

Fig. 5-44. Screen discharge coefficients, plain square-mesh screens. (*Courtesy of E. I. du Pont de Nemours & Co.*)

REV	DESCRIPTION	DRAWN / APPROVED	DATE / DATE
A	CHANGED LOCATION OF FILTER MATERIAL FILL PORT. ADDED SECTION H-H.	B. CYKO	08-12-09

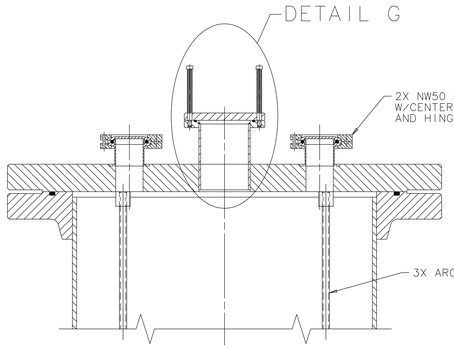

SECTION B-B

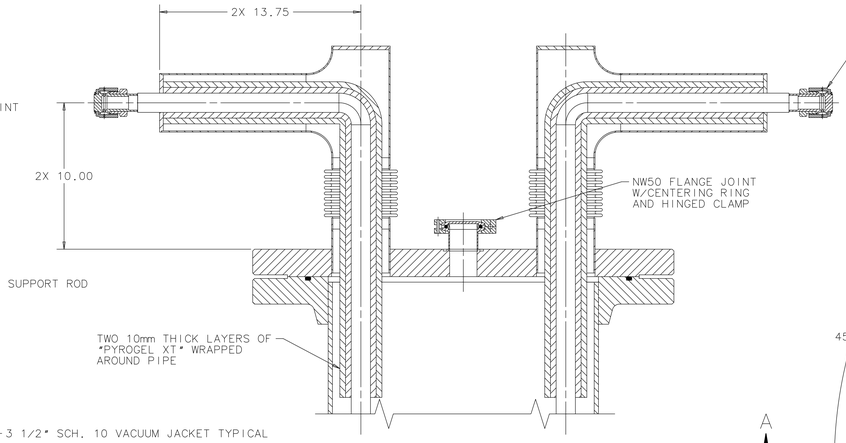

SECTION C-C

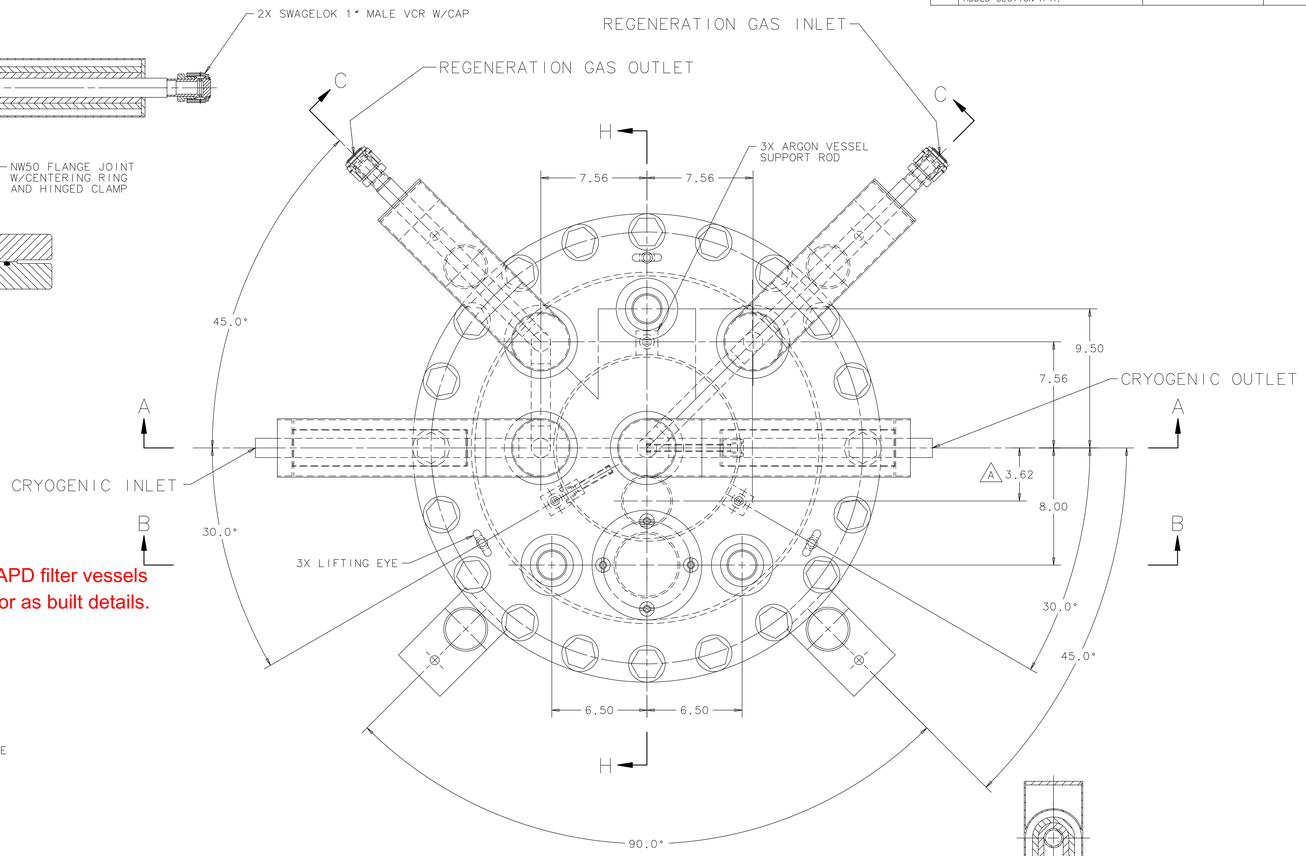

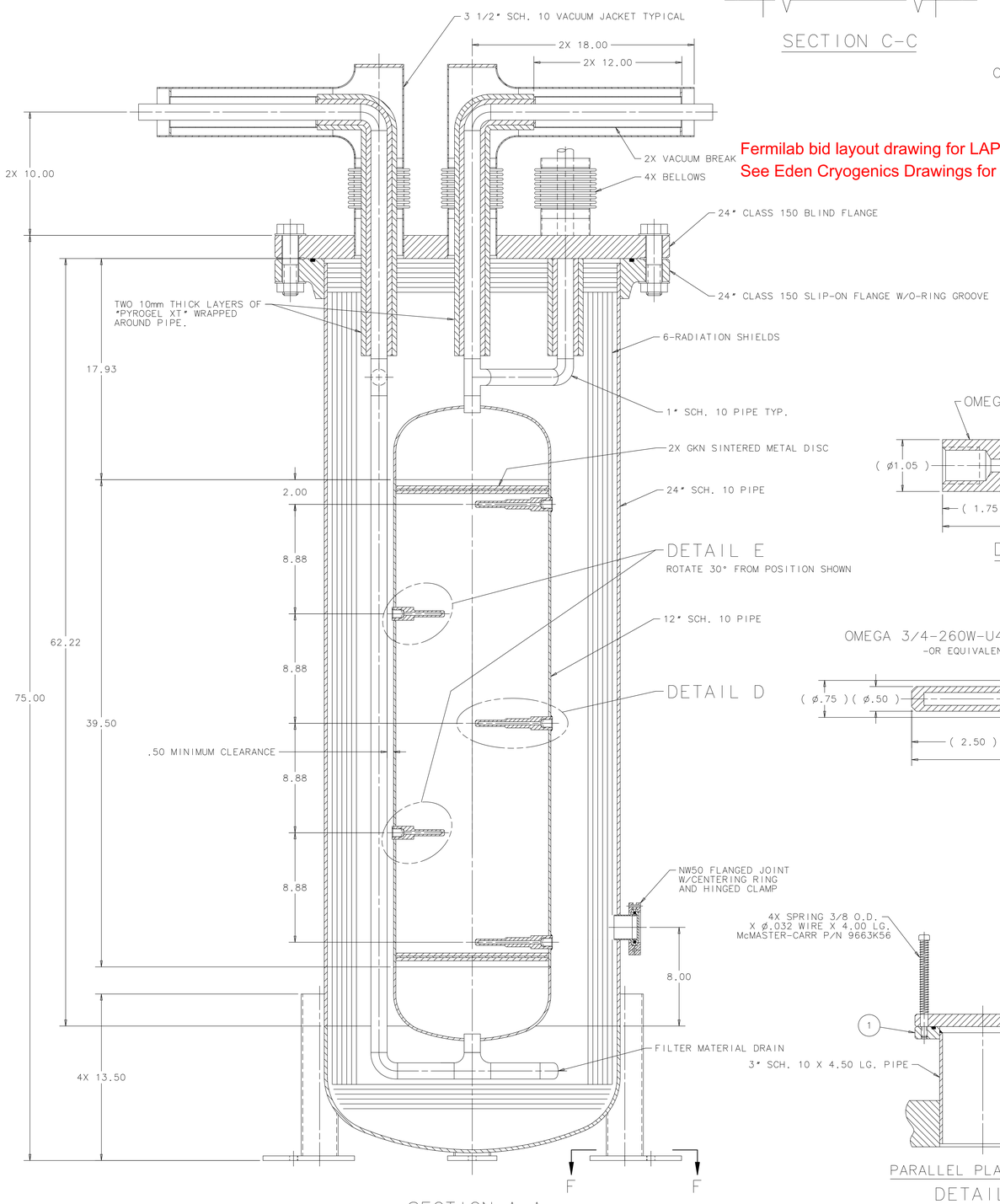

Fermilab bid layout drawing for LAPD filter vessels
See Eden Cryogenics Drawings for as built details.

SECTION A-A

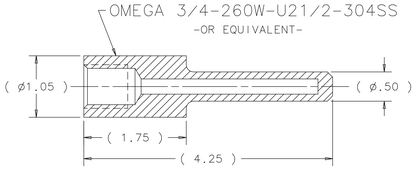

DETAIL E

SCALE: 1:1

2X

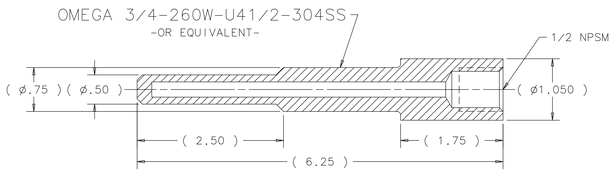

DETAIL D

SCALE: 1:1

3X

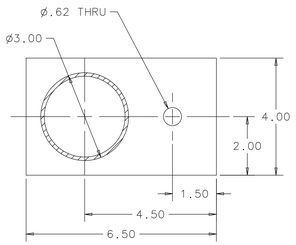

SECTION F-F

SCALE: 1:2

4X

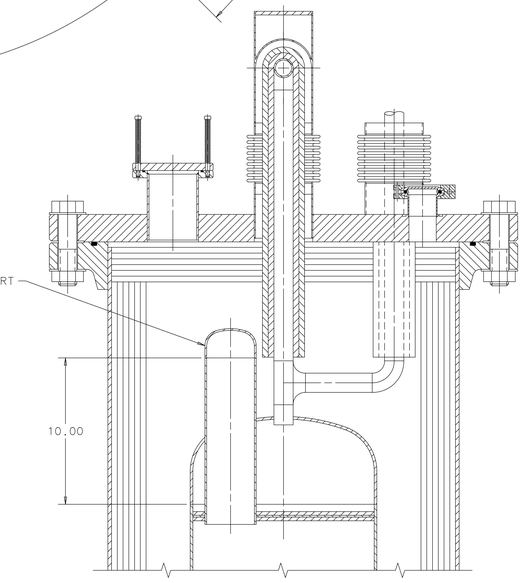

A SECTION H-H

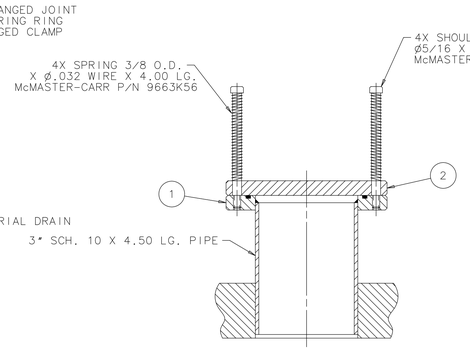

PARALLEL PLATE RELIEF

DETAIL G

SCALE: 1:2

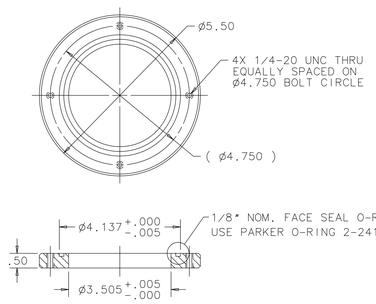

ITEM 1

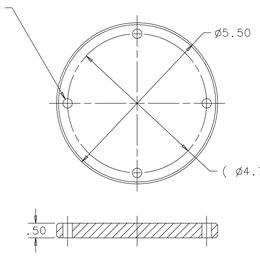

ITEM 2

NOTICE: IMAGE OBTAINED FROM FERMILAB WEB SITE
This information is provided for REFERENCE use only. Not for MANFACTURE, or DESIGN INFORMATION. All information contained in this document represents work sponsored by an agency of the U.S. Government. Neither the U.S. Government nor any agency thereof, nor Universities Research Association, Inc., nor any of their employees or officers, makes any warranty, express or implied, or assumes any legal liability or responsibility for the accuracy, completeness, or usefulness of any information, apparatus, product or process disclosed, or represents that its use would not infringe privately owned rights.

UNLESS OTHERWISE SPECIFIED			ORIGINATOR	T.TOPE	17-JUL-2009
.XX	.XXX	ANGLES	DRAWN	W.CYKO	17-JUL-2009
± .06	± .010	± 2°	CHECKED	J.RAUCH	07-AUG-2009
1. BREAK ALL SHARP EDGES .015 MAX. MAX. 2. DO NOT SCALE DRAWING. 3. DIMENSIONS BASED UPON ASME Y14.5M-1994 4. MAX. ALL MACH. SURFACES 250 √ 5. DRAWING UNITS: U.S.INCH			APPROVED	T.TOPE	07-AUG-2009
			USED ON		
			MATERIAL	SEE DRAWING AND NOTES.	

FERMI NATIONAL ACCELERATOR LABORATORY
UNITED STATES DEPARTMENT OF ENERGY

LIQUID ARGON TPC PURITY DEMO PURIFIER VESSEL GENERAL ARRANGEMENT

SCALE	DRAWING NUMBER	SHEET	REV
1:4 & AS NOTED	3942.330-ME-466500	1 OF 1	A

CREATED WITH : Ideas12NXSeries GROUP: PPD/MECHANICAL DEPARTMENT

v3.10.15 30 / 424

TYPE RXSO

0 - 400 psig

A CIRCOR CRYOGENICS COMPANY

Rockwood Swendeman

BRONZE SAFETY RELIEF VALVES

Filter vessel ASME relief mfg info, PSV-568-Ar & PSV-601-Ar, Also used for PSV-108-HAr

Features

- **Special Teflon® seat, making bubble-tight seals possible to over 90% of set pressures per spec API 527; not applicable to steam.**
- **Adjustable blowdown ring**
- **Meets AD-Merkblatt A2 certified by TÜV**
- **Cleaned and packaged for use in O_2 service in compliance with the CGA specification G-4.1**

  Additional cleaning specifications:

  - **4WPI-SW70003**
  - **ES.660.503**
  - **GS-38**
  - **GS-40**

Technical Data

Operating Ranges

Temperature .....-423°F to +400°F

Set Pressures .....to 400 psig

Materials of Construction

Shell .....Cast Bronze, A.S.M.E SB-62

Base .....Forged Brass, Alloy C37700

Trim .....Copper Alloy

Spring .....Stainless Steel 17-7 PH A.S.T.M., A-313, Type 631

Tests

Each valve is set, tested, retested and sealed at the factory to the customer's specifications.

Sizes

Inlet - 1/2 inch to 2 inch

Outlet - 3/4 inch to 2-1/2 inch

Application

- **Especially recommended where noxious or expensive liquids or gases place a premium on seal quality.**
- **Stationary Cryogenic storage tanks**
- **Dual Safety relief systems**
- **Overpressure relief of tanks, pipelines, vessels, pumps**
- **Air and gas compressors**
- **Corrosive industrial applications**

Applicable Codes

Designed and manufactured to meet:

- CGA S-1.2 and S-1.3.
- V-4301 (Cryogenic Non-Oxygen)
- V-4401 (Oxygen)
- ASME sec.VIII
- API 527
- AD-Merkblatt A2
- CRN 0G0591.9

Options

- **Large and Extra Large Capacity**

  Consult factory for flow rates
- **BSP threads are available on most sizes**
- **Lever operation**

AIR CAPACITY TABLE

Discharge capacities in cubic feet per minute of air at 10% or 3 PSI, whichever is greater, overpressure.

Inlet Sizes Inches	1/2 3/4	1/2 3/4 1	3/4 1 1-1/4	1 1-1/4 1-1/2	1-1/4 1-1/2 2
Outlet Sizes	3/4 1	1 1-1/4	1-1/4 1-1/2	1-1/2 2	2 2-1/2
Seat Diameter	A 0.750	B 1.000	C 1.250	D 1.500	E 2.000
Flow Area	0.118	0.204	0.326	0.424	0.628
Set Pressure					
10	36	63	100	130	193
15	43	74	118	154	227
20	48	85	136	177	262
25	55	96	154	200	297
30	62	108	172	224	332
35	70	120	192	250	370
40	77	133	212	276	408
45	84	145	232	301	446
50	91	157	252	327	485
55	98	170	271	353	523
60	105	182	291	379	561
65	113	195	311	405	599
70	120	207	331	430	638
75	127	220	351	456	676
80	134	232	371	482	714
85	141	244	391	508	752
90	149	257	410	534	791
95	156	269	430	560	829
100	163	282	450	585	867
105	170	294	470	611	905
110	177	307	490	637	944
115	184	319	510	663	982
120	192	331	530	689	1020
125	199	344	549	715	1058
130	206	356	569	740	1097
135	213	369	589	766	1135
140	220	381	609	792	1173
145	228	393	629	818	1211
150	235	406	649	844	1249
155	242	418	668	869	1288
160	249	431	688	895	1326
165	256	443	708	921	1364
170	264	456	728	947	1402
175	271	468	748	973	1441
180	278	480	768	999	1479
185	285	493	788	1024	1517
190	292	505	807	1050	1555
195	299	518	827	1076	1594
200	307	530	847	1102	1632
205	314	543	867	1128	1670

Inlet Sizes Inches	1/2 3/4	1/2 3/4 1	3/4 1 1-1/4	1 1-1/4 1-1/2	1-1/4 1-1/2 2
Outlet Sizes	3/4 1	1 1-1/4	1-1/4 1-1/2	1-1/2 2	2 2-1/2
Seat Diameter	A 0.750	B 1.000	C 1.250	D 1.500	E 2.000
Flow Area	0.118	0.204	0.326	0.424	0.628
Set Pressure					
210	321	555	887	1153	1708
215	328	567	907	1179	1747
220	335	580	927	1205	1785
225	343	592	946	1231	1823
230	350	605	966	1257	1861
235	357	617	986	1283	1900
240	364	629	1006	1308	1938
245	371	642	1026	1334	1976
250	378	654	1046	1360	2014
255	386	667	1066	1386	2053
260	393	679	1085	1412	2091
265	400	692	1105	1437	2129
270	407	704	1125	1463	2167
275	414	716	1145	1489	2206
280	422	729	1165	1515	2244
285	429	741	1185	1541	2282
290	436	754	1204	1567	2320
295	443	766	1224	1592	2359
300	450	779	1244	1618	2397
305	458	791	1264	1644	2435
310	465	803	1284	1670	2473
315	472	816	1304	1696	2511
320	479	828	1324	1721	2550
325	486	841	1343	1747	2588
330	493	853	1363	1773	2626
335	501	866	1383	1799	2664
340	508	878	1403	1825	2703
345	515	890	1423	1851	2741
350	522	903	1443	1876	2779
355	529	915	1463	1902	2817
360	537	928	1482	1928	2856
365	544	940	1502	1954	2894
370	551	952	1522	1980	2932
375	558	965	1542	2005	2970
380	565	977	1562	2031	3009
385	990	989	1582	2057	3047
390	580	1002	1602	2083	3085
395	587	1015	1621	2109	3123
400	594	1027	1641	2135	3162

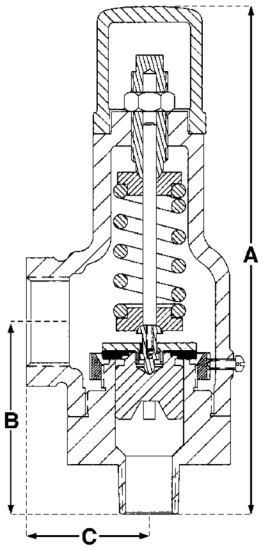

DIMENSIONS & WEIGHTS

Inlet	Outlet	A	B	C	Weight	Max Psi
½	¾	5 15/16	2 21/32	1 15/16	2 lbs.	max 400 psi
½	1	6 9/16	2 29/32	1 9/16	3 lbs.	max 400 psi
¾	¾	6 3/16	2 9/16	1 5/16	2 lbs.	max 150 psi
¾	1	6 9/16	2 29/32	1 9/16	3 lbs.	max 400 psi
1	1	7 23/32	2 15/16	1 5/8	4 lbs.	max 150 psi
1	1 ¼	7 13/16	3 1/32	1 13/16	5 lbs.	max 400 psi
1 ¼	1 ¼	8 23/32	3 ½	2 5/16	6 lbs.	max 150 psi
1 ¼	1 ½	9 7/8	3 9/16	2 7/16	7 lbs.	max 400 psi
1 ½	1 ½	9 29/32	3 9/16	2 7/16	7 lbs.	max 150 psi
1 ½	2	10 ¼	3 13/16	2 5/8	9 lbs.	max 400 psi
2	2	10 1/16	3 ¾	2 5/8	9 lbs.	max 150 psi
2	2 ½	10 1/16	4 1/16	2 13/16	10 lbs.	max 400 psi

TO ORDER: See Page 14

Rockwood Swendeman
A CIRCOR CRYOGENICS COMPANY

SAFETY RELIEF VALVES

How To Order

Sample: 710 N B D E - A 025

MODEL NUMBER
- 710 - RXSO Bronze ASME coded with O_2 cleaning
- 715 - RXSO Bronze TÜV coded with O_2 cleaning
- 760 - RXSO-S Stainless Steel RXSO with O_2 cleaning
- 770 - RSL Bronze Non ASME coded with O_2 cleaning
- 775 - RSL SS Non ASME coded with O_2 cleaning

CAP
- N - Plain Cap
- E - Open Lever

ORIFICE
- A - 0.750
- B - 1.000
- C - 1.250
- D - 1.500
- E - 2.000

INLET SIZE (inches)
- C - 1/2
- D - 3/4
- E - 1
- F - 1-1/4
- G - 1-1/2
- H - 2

OUTLET SIZE (inches)
- D - 3/4
- E - 1
- F - 1-1/4
- G - 1-1/2
- H - 2
- J - 2-1/2

VALVE SERVICE (For Set Valves)
- A - Air / Gas Sec. VIII
- N - Air / Gas / Liquid Non Code
- E - Air / Gas TÜV
- Z - Other

SET PRESSURE =100 psig

DIVERTER AND CRYOTREE™

How To Order

CRYOTREE only

Sample: 790 D F D C A B - E B 250

MODEL NUMBER
- 780 - Diverter Valve
- 790 - CryoTree™

DIVERTER VALVE SIZE (inches)
- D - 3/4
- E - 1

ORIFICE
- F - Full

TOP PORT (inches)
- D - 3/4
- E - 1
- F - 1-1/4

BOTTOM PORT (inches)
- A - 1/4
- B - 3/8
- C - 1/2
- D - 3/4
- E - 1
- F - 1-1/4
- G -

SIDE PORT (inches)
- A - 1/4
- B - 3/8
- C - 1/2
- D - 3/4
- E - 1
- F - 1-1/4

MATERIAL
- B - Bronze with 316 Stem

SRV OUTLET
- D - 3/4
- E - 1
- F - 1-1/4
- H - 2

SRV ORIFICE
- A - 0.750
- B - 1.000
- C - 1.250
- D - 1.500
- E - 2.000

SET PRESSURE

SC RS/0604

PRV-106-HAr, regulator that supplies filter regeneration gas

Model 3200 Series

Single-Stage High-Purity/High Flow Brass and Stainless Steel Regulator

Description

High-purity regulators for use with high flow rate applications.

Applications

- Applications requiring a high flow rate, such as purging of large reactor or storage vessels.

Design Features/Components

- High-purity nickel plated brass barstock or 316 stainless steel body
- 316 stainless steel diaphragm
- Panel mountable
- Bonnets are ported and threaded to pipe gases away from the work area
- Available as an in-line regulator or a cylinder regulator

Materials of Construction

Body:	316 stainless steel or nickel plated brass barstock
Bonnet:	Stainless steel
Diaphragm:	Teflon lined 316 stainless steel
Seat:	Kel-F 81
Seals:	Teflon

Specifications

	In-Line Regulator	Cylinder Regulator
Maximum Inlet Pressure:	3000 psig (20,700 kPa)	3000 psig (20,700 kPa)
Maximum Flow Rate:	*See Table Below**	
Flow Capacity (Cv):	1.0	1.0
Operating Temperature:	-40°F to 165°F (-40°C to 74°C)	-40°F to 165°F (-40°C to 74°C)
Inlet Ports:	1/2" NPT Female	1/2" NPT Female
Outlet Ports:	1/2" NPT Female	1/2" NPT Female
Outlet Connection:	None	1/2" tube fitting
Gauge Ports:	1/4" NPT Female	1/4" NPT Female
Bonnet Vent Port:	1/16" FNPT	1/16" FNPT
Shipping Weight:	4 lbs	5 lbs

* Maximum Flow Rates for In-Line Regulators and Cylinder Regulators (at 2500 psig inlet pressure)

Delivery Pressure	Flow Rate
50 psig	100 SCFM (2832 SLPM)
100 psig	150 SCFM (4248 SLPM)
125 psig	200 SCFM (5664 SLPM)
200 psig	250 SCFM (7080 SLPM)

Ordering Information

In-Line Regulator Models

Model Number	Delivery Pressure Range	Delivery Pressure Gauge
Stainless Steel Models		
3200	0-50 psig	0-100 psig
3201	0-100 psig	30"-0-200 psig
3203	0-150 psig	30"-0-300 psig
3204	0-250 psig	0-400 psig
Brass Models		
3240	0-50 psig	0-100 psig
3241	0-100 psig	30"-0-200 psig
3243	0-150 psig	0-400 psig
3244	0-250 psig	0-400 psig

Cylinder Regulator Models

Model Number	Delivery Pressure Range	Delivery Pressure Gauge	Cylinder Pressure Gauge
Stainless Steel Models			
3200-CGA	0-50 psig	0-100 psig	0-3000 psig
3201-CGA	0-100 psig	30"-0-200 psig	0-3000 psig
3203-CGA	0-150 psig	30"-0-300 psig	0-3000 psig
3204-CGA	0-250 psig	0-400 psig	0-3000 psig
Brass Models			
3240-CGA	0-50 psig	0-100 psig	0-3000 psig
3241-CGA	0-100 psig	30"-0-200 psig	0-3000 psig
3243-CGA	0-150 psig	0-400 psig	0-3000 psig
3244-CGA	0-250 psig	0-400 psig	0-3000 psig

Available CGA's:
Brass: 320, 346, 580, 590
Stainless Steel: 320, 326, 330, 346, 580, 590, 660, 705

Options

Model Number	Description
63-2233 316 Stainless Steel Gauge	Inlet Pressure Gauge, 0-3000 psig – For use with Model 3200-3204 Stainless Steel In-Line Regulators
63-3133 Chrome Plated Brass Gauge	Inlet Pressure Gauge, 0-3000 psig – For use with Model 3240-3244 Brass In-Line Regulators
KIT-0204-SA	Panel Mounting Kit
MSP-0012-XX	Inboard Helium Leak Rate Certification
MSP-0013-XX	Combination Inboard/Outboard Helium Leak Rate Certification

{Relief valve calculations for the fire conditions for the LAPD filter vessels}
{Considers both radiation between surfaces and convection between surfaces}

L_gap = 0.009525 *{m, gap between the filter vessel wall and the radiation shields, vacuum jacket ID is 23.5"* and filter vessel OD of 12.75*" OD, gap was measured as roughly 3/8 inch}*

L_gap_inches = 0.009525*39.37 *{convert gap from meters to inches}*

{----------}
qrad_12 = As*sigma*(T_1^4 - T_2^4)/(1/epsilon_1 + 1/epsilon_2 - 1) *{W, radiation exchange between the vacuum jacket and the outer shield}*

qrad_12+ qconv_12 = q_total *{W, total heat flow from outer to inner vessel}*

{convection between the vacuum jacket and the outer shield}

Ra_L12= g*Beta12*(T_1-T_2)*L12^3/ (alpha12*nu12) *{Rayleigh Number}*

Beta12 = 1 / T_film12 *{1/K, volumetric thermal expansion coefficient}*

T_film12 = (T_1+ T_2)/2 *{K, average temperaure of the two enclosure surfaces used for property evaluation}*

L12= L_inches12/39.37 *{m, length of the gap between the two surfaces}*

L_inches12 = 0.375 *{in, length of the gap between the two surfaces}*

alpha12 = k12 / (rho12*Cp12) *{m2/s, thermal diffusivity, thermal dffusivity relationship}*

mu12 = rho12*nu12 *{kg/ s*m, relationship between dynamic and kinematic viscosity }*

k12 = Conductivity(Air,T=T_film12) *{W/m*K, thermal conductivity of the air in the vacuum space, evaluated for air at ambient pressure and the average temperature of the two enclosure surfaces }*

rho12= Density(Air,T=T_film12,P=Patm12) *{kg/m^3, density of the air in the vacuum space, evaluated for air at ambient pressure and the average temperature of the two enclosure surfaces }*

Patm12= 1.01325 *{bar, pressure in the vacuum jacket}*

Cp12 =Cp(Air,T=T_film12) *{J/kg-K, specific heat of the air in the vacuum jacket at constant pressure}*

mu12 =Viscosity(Air,T=T_film12) *{kg/ s*m, viscosity }*

H_over_L_ration12 = H_inches12/ L_inches12 *{dimensionless, ratio of the cavity height H to the cavity gap L}*

H_inches12 = 65 *{inches, height of the cavity}*

H12= H_inches12/39.37 *{meters, height of the cavity}*

Pr12= nu12/alpha12 *{Prandtl number, dimensionless, ratio of the momentum and thermal diffusivities, nu over alpha}*

Nus_12 = hbar12*L12/k12 *{Nusselt number, dimensionless temperature gradient at the surface}*

qconv_12 = hbar12*As*(T_1-T_2) *{W, convective heat transfer rate between opposite cavity walls}*

{equation 4.91Handbook of Heat Transfer 3rd Edition}
Nus_12= (1 + (((0.0665*Ra_L12^(1/3)) / (1+(9000/Ra_L12)^1.4))^2))^(1/2) *{correlation for Pr~0.7, validated for Ra < 10^6 and 40 < H/L < 110, H/L is computed as 173 so its out of range, Shewen et al }*

Nus_12_check_horizontal = 0.069*(Ra_L12^(1/3))*(Pr12^0.074)

{----------}
qrad_23 = As*sigma*(T_2^4 - T_3^4)/(1/epsilon_2 + 1/epsilon_3 - 1)

qrad_23+ qconv_23 = q_total *{W, total heat flow from outer to inner vessel}*

{convection between radiation shields}

Ra_L23= g*Beta23*(T_2-T_3)*L23^3/ (alpha23*nu23) *{Rayleigh Number}*

Beta23 = 1 / T_film23 *{1/K, volumetric thermal expansion coefficient}*

T_film23= (T_2+ T_3)/2 *{K, average temperaure of the two enclosure surfaces used for property evaluation}*

L23= L_inches23/39.37 *{m, length of the gap between the two surfaces}*

L_inches23 = 0.375 *{in, length of the gap between the two surfaces}*

alpha23 = k23 / (rho23*Cp23) *{m2/s, thermal diffusivity, thermal dffusivity relationship}*

mu23 = rho23*nu23 *{kg/ s*m, relationship between dynamic and kinematic viscosity }*

k23 = Conductivity(Air,T=T_film23) *{W/m*K, thermal conductivity of the air in the vacuum space, evaluated for air at ambient pressure and the average temperature of the two enclosure surfaces }*

rho23= Density(Air,T=T_film23,P=Patm23) *{kg/m^3, density of the air in the vacuum space, evaluated for air at ambient pressure and the average temperature of the two enclosure surfaces }*

Patm23= 1.01325 *{bar, pressure in the vacuum jacket}*

Cp23 =Cp(Air,T=T_film23) *{J/kg-K, specific heat of the air in the vacuum jacket at constant pressure}*

mu23 =Viscosity(Air,T=T_film23) *{kg/ s*m, viscosity }*

H_over_L_ration23= H_inches23/ L_inches23 *{dimensionless, ratio of the cavity height H to the cavity gap L}*

H_inches23 = 65 *{inches, height of the cavity}*

H23= H_inches23/39.37 *{meters, height of the cavity}*

Pr23= nu23/alpha23 *{Prandtl number, dimensionless, ratio of the momentum and thermal diffusivities, nu over alpha}*

Nus_23 = hbar23*L23/k23 *{Nusselt number, dimensionless temperature gradient at the surface}*

qconv_23 = hbar23*As*(T_2-T_3) *{W, convective heat transfer rate between opposite cavity walls}*

{equation 4.91Handbook of Heat Transfer 3rd Edition}
Nus_23= (1 + (((0.0665*Ra_L23^(1/3)) / (1+(9000/Ra_L23)^1.4))^2))^(1/2) *{correlation for Pr~0.7, validated for Ra < 10^6 and 40 < H/L < 110, H/L is computed as 173 so its out of range }*

{----------}
qrad_34 = As*sigma*(T_3^4 - T_4^4)/(1/epsilon_3 + 1/epsilon_4 - 1)

qrad_34+ qconv_34 = q_total *{W, total heat flow from outer to inner vessel}*

{convection between radiation shields}

Ra_L34= g*Beta34*(T_3-T_4)*L34^3/ (alpha34*nu34) *{Rayleigh Number}*

Beta34 = 1 / T_film34 *{1/K, volumetric thermal expansion coefficient}*

T_film34 = (T_3+ T_4)/2 *{K, average temperaure of the two enclosure surfaces used for property evaluation}*

L34= L_inches34/39.37 *{m, length of the gap between the two surfaces}*

L_inches34 = 0.375 *{in, length of the gap between the two surfaces}*

alpha34 = k34 / (rho34*Cp34) *{m2/s, thermal diffusivity, thermal dffusivity relationship}*

mu34 = rho34*nu34 *{kg/ s*m, relationship between dynamic and kinematic viscosity }*

k34 = Conductivity(Air,T=T_film34) *{W/m*K, thermal conductivity of the air in the vacuum space, evaluated for air at ambient pressure and the average temperature of the two enclosure surfaces }*

rho34= Density(Air,T=T_film34,P=Patm34) *{kg/m^3, density of the air in the vacuum space, evaluated for air at ambient pressure and the average temperature of the two enclosure surfaces }*

Patm34= 1.01325 *{bar, pressure in the vacuum jacket}*

Cp34 =Cp(Air,T=T_film34) *{J/kg-K, specific heat of the air in the vacuum jacket at constant pressure}*

mu34 =Viscosity(Air,T=T_film34) *{kg/ s*m, viscosity }*

H_over_L_ration34 = H_inches34/ L_inches34 *{dimensionless, ratio of the cavity height H to the cavity gap L}*

H_inches34 = 65 *{inches, height of the cavity}*

H34= H_inches12/39.37 *{meters, height of the cavity}*

Pr34= nu34/alpha34 *{Prandtl number, dimensionless, ratio of the momentum and thermal diffusivities, nu over alpha}*

Nus_34 = hbar34*L34/k34 *{Nusselt number, dimensionless temperature gradient at the surface}*

qconv_34 = hbar34*As*(T_3-T_4) *{W, convective heat transfer rate between opposite cavity walls}*

{equation 4.91Handbook of Heat Transfer 3rd Edition}
Nus_34= (1 + (((0.0665*Ra_L34^(1/3)) / (1+(9000/Ra_L34)^1.4))^2))^(1/2) *{correlation for Pr~0.7, validated for Ra < 10^6 and 40 < H/L < 110, H/L is computed as 173 so its out of range }*

{----------}
qrad_45 = As*sigma*(T_4^4 - T_5^4)/(1/epsilon_4 + 1/epsilon_5 - 1)

qrad_45+ qconv_45 = q_total *{W, total heat flow from outer to inner vessel}*

{convection between radiation shields}

Ra_L45= g*Beta45*(T_4-T_5)*L45^3/ (alpha45*nu45) *{Rayleigh Number}*

Beta45 = 1 / T_film45 *{1/K, volumetric thermal expansion coefficient}*

T_film45 = (T_4+ T_5)/2 *{K, average temperaure of the two enclosure surfaces used for property evaluation}*

L45= L_inches12/39.37 *{m, length of the gap between the two surfaces}*

L_inches45= 0.375 *{in, length of the gap between the two surfaces}*

alpha45 = k45/ (rho45*Cp45) *{m2/s, thermal diffusivity, thermal dffusivity relationship}*

mu45 = rho45*nu45 *{kg/ s*m, relationship between dynamic and kinematic viscosity }*

k45 = Conductivity(Air,T=T_film45) *{W/m*K, thermal conductivity of the air in the vacuum space, evaluated for air at ambient pressure and the average temperature of the two enclosure surfaces }*

rho45= Density(Air,T=T_film45,P=Patm45) *{kg/m^3, density of the air in the vacuum space, evaluated for air at ambient pressure and the average temperature of the two enclosure surfaces }*

Patm45= 1.01325 *{bar, pressure in the vacuum jacket}*

Cp45 =Cp(Air,T=T_film45) *{J/kg-K, specific heat of the air in the vacuum jacket at constant pressure}*

mu45 =Viscosity(Air,T=T_film45) *{kg/ s*m, viscosity }*

H_over_L_ration45 = H_inches45/ L_inches45 *{dimensionless, ratio of the cavity height H to the cavity gap L}*

H_inches45 = 65 *{inches, height of the cavity}*

H45= H_inches12/39.37 *{meters, height of the cavity}*

Pr45= nu45/alpha45 *{Prandtl number, dimensionless, ratio of the momentum and thermal diffusivities, nu over alpha}*

Nus_45 = hbar45*L45/k45 *{Nusselt number, dimensionless temperature gradient at the surface}*

qconv_45 = hbar45*As*(T_4-T_5) *{W, convective heat transfer rate between opposite cavity walls}*

{equation 4.91Handbook of Heat Transfer 3rd Edition}
Nus_45= (1 + (((0.0665*Ra_L45^(1/3)) / (1+(9000/Ra_L45)^1.4))^2))^(1/2) *{correlation for Pr~0.7, validated for Ra < 10^6 and 40 < H/L < 110, H/L is computed as 173 so its out of range }*
{----------}
qrad_56 = As*sigma*(T_5^4 - T_6^4)/(1/epsilon_5 + 1/epsilon_6 - 1)

qrad_56+ qconv_56 = q_total *{W, total heat flow from outer to inner vessel}*

{convection between radiation shields}

Ra_L56= g*Beta56*(T_5-T_6)*L56^3/ (alpha56*nu56) *{Rayleigh Number}*

Beta56 = 1 / T_film56 *{1/K, volumetric thermal expansion coefficient}*

T_film56 = (T_5+ T_6)/2 *{K, average temperaure of the two enclosure surfaces used for property evaluation}*

L56= L_inches12/39.37 *{m, length of the gap between the two surfaces}*

L_inches56= 0.375 *{in, length of the gap between the two surfaces}*

alpha56= k56/ (rho56*Cp56) *{m2/s, thermal diffusivity, thermal dffusivity relationship}*

mu56 = rho56*nu56 *{kg/ s*m, relationship between dynamic and kinematic viscosity }*

k56 = Conductivity(Air,T=T_film56) *{W/m*K, thermal conductivity of the air in the vacuum space, evaluated for air at ambient pressure and the average temperature of the two enclosure surfaces }*

rho56= Density(Air,T=T_film56,P=Patm56) *{kg/m^3, density of the air in the vacuum space, evaluated for air at ambient pressure and the average temperature of the two enclosure surfaces }*

Patm56= 1.01325 *{bar, pressure in the vacuum jacket}*

Cp56 =Cp(Air,T=T_film56) *{J/kg-K, specific heat of the air in the vacuum jacket at constant pressure}*

mu56 =Viscosity(Air,T=T_film56) *{kg/ s*m, viscosity }*

H_over_L_ration56 = H_inches56/ L_inches56 *{dimensionless, ratio of the cavity height H to the cavity gap L}*

H_inches56 = 65 *{inches, height of the cavity}*

H56= H_inches56/39.37 *{meters, height of the cavity}*

Pr56= nu56/alpha56 *{Prandtl number, dimensionless, ratio of the momentum and thermal diffusivities, nu over alpha}*

Nus_56 = hbar56*L56/k56 *{Nusselt number, dimensionless temperature gradient at the surface}*

qconv_56 = hbar56*As*(T_5-T_6) *{W, convective heat transfer rate between opposite cavity walls}*

{equation 4.91Handbook of Heat Transfer 3rd Edition}
Nus_56= (1 + (((0.0665*Ra_L56^(1/3)) / (1+(9000/Ra_L56)^1.4))^2))^(1/2) *{correlation for Pr~0.7, validated for Ra < 10^6 and 40 < H/L < 110, H/L is computed as 173 so its out of range }*
{----------}
qrad_67 = As*sigma*(T_6^4 - T_7^4)/(1/epsilon_6 + 1/epsilon_7 - 1)

qrad_67+ qconv_67 = q_total *{W, total heat flow from outer to inner vessel}*

{convection between radiation shields}

Ra_L67= g*Beta67*(T_6-T_7)*L67^3/ (alpha67*nu67) *{Rayleigh Number}*

Beta67 = 1 / T_film67 *{1/K, volumetric thermal expansion coefficient}*

T_film67= (T_6+ T_7)/2 *{K, average temperaure of the two enclosure surfaces used for property evaluation}*

L67= L_inches12/39.37 *{m, length of the gap between the two surfaces}*

L_inches67 = 0.375 *{in, length of the gap between the two surfaces}*

alpha67 = k67 / (rho67*Cp67) *{m2/s, thermal diffusivity, thermal dffusivity relationship}*

mu67 = rho67*nu67 *{kg/ s*m, relationship between dynamic and kinematic viscosity }*

k67 = Conductivity(Air,T=T_film67) *{W/m*K, thermal conductivity of the air in the vacuum space, evaluated for air at ambient pressure and the average temperature of the two enclosure surfaces }*

rho67= Density(Air,T=T_film67,P=Patm67) *{kg/m^3, density of the air in the vacuum space, evaluated for air at ambient pressure and the average temperature of the two enclosure surfaces }*

Patm67= 1.01325 *{bar, pressure in the vacuum jacket}*

Cp67 =Cp(Air,T=T_film67) *{J/kg-K, specific heat of the air in the vacuum jacket at constant pressure}*

mu67 =Viscosity(Air,T=T_film67) *{kg/ s*m, viscosity }*

H_over_L_ration67 = H_inches67/ L_inches67 *{dimensionless, ratio of the cavity height H to the cavity gap L}*

H_inches67 = 65 *{inches, height of the cavity}*

H67= H_inches67/39.37 *{meters, height of the cavity}*

Pr67= nu67/alpha67 *{Prandtl number, dimensionless, ratio of the momentum and thermal diffusivities, nu over alpha}*

Nus_67 = hbar67*L67/k67 *{Nusselt number, dimensionless temperature gradient at the surface}*

qconv_67 = hbar67*As*(T_6-T_7) *{W, convective heat transfer rate between opposite cavity walls}*

{equation 4.91Handbook of Heat Transfer 3rd Edition}
Nus_67= (1 + (((0.0665*Ra_L67^(1/3)) / (1+(9000/Ra_L67)^1.4))^2))^(1/2) *{correlation for Pr~0.7, validated for Ra < 10^6 and 40 < H/L < 110, H/L is computed as 173 so its out of range }*

{----------}
qrad_78 = As*sigma*(T_7^4 - T_8^4)/(1/epsilon_7 + 1/epsilon_8 - 1) *{radiation exchange between the inner shield and the inner vessel}*

qrad_78+ qconv_78 = q_total *{W, total heat flow from outer to inner vessel}*

Ra_L78 = g*Beta78*(T_7-T_8)*L78^3/ (alpha78*nu78) *{Rayleigh Number}*

g = 9.8 *{gravitational acceleration m/s^2}*

Beta78 = 1 / T_film78 *{1/K, volumetric thermal expansion coefficient}*

T_film78 = (T_7 + T_8)/2 *{K, average temperaure of the two enclosure surfaces used for property evaluation}*

L78 = L_inches78/39.37 *{m, length of the gap between the two surfaces}*

L_inches78 = 3.125 *{in, length of the gap between the two surfaces}*

alpha78 = k78 / (rho78*Cp78) *{thermal diffusivity, m2/s, evaluated for air at ambient pressure and Tf }*

mu78 = rho78*nu78 *{viscosity kg/ s* m}*

k78 = Conductivity(Air,T=T_film78) *{thermal conductivity of the air in the vacuum space, evaluated for air at ambient pressure and the average temperature of the two enclosure surfaces }*

rho78 = Density(Air,T=T_film78,P=Patm78) *{density of the air in the vacuum space, evaluated for air at ambient pressure and the average temperature of the two enclosure surfaces }*

Patm78 = 1.01325 *{bar, pressure in the vacuum jacket}*

Cp78 =Cp(Air,T=T_film78) *{J/kg-K, specific heat of the air in the vacuum jacket at constant pressure}*

mu78 =Viscosity(Air,T=T_film78) *{kg/ s*m, viscosity }*

H_over_L_ration78 = H_inches78 / L_inches78 *{dimensionless, ratio of the cavity height H to the cavity gap L}*

H_inches78 = 65 *{inches, height of the cavity}*

H78 = H_inches78/39.37 *{meters, height of the cavity}*

Pr78 = nu78/alpha78 *{Prandtl number, dimensionless, ratio of the momentum and thermal diffusivities, nu over alpha}*

Nus_78 = hbar78*L78/k78 *{Nusselt number, dimensionless temperature gradient at the surface}*

qconv_78 = hbar78*As*(T_7-T_8) *{W, convective heat transfer rate between opposite cavity walls}*

As = 4.132 *{m^2 The surface area A for all calculations was taken as the surface area of a cylinder (including the top and bottom) whose outside diameter matches the inner diameter of the vacuum jacket. This is conservative because the surface area of the radiation shields and the inner vessel is significantly less than that of the vacuum jacket. }*

Nus_78=0.046*Ra_L78^(1/3) *{Incropera and Dewitt 4th edition equation 9.53} {Ral = 4.3E7. H/L = 21, Pr =0.7, applicable 1 < H/L < 40, 10^6 < RaL < 10^9 Ral, sightly out of the Pr range of 1 < Pr < 2E4 }*

Nus_78_check_horizontal = 0.069*(Ra_L78^(1/3))*(Pr78^0.074)

{----------}

sigma = 5.67e-8 *{Stefan-Boltzmann constant W/(m^2*K^4}*

epsilon_1 = 1 *{surface emissivity of the ID of the vacuum jacket}*

epsilon_2 = 0.1 *{shield surface emissivity}*

epsilon_3 = 0.1 *{shield surface emissivity}*

epsilon_4 = 0.1 *{shield surface emissivity}*

epsilon_5 = 0.1 *{shield surface emissivity}*

epsilon_6 = 0.1 *{shield surface emissivity}*

epsilon_7 = 0.1 *{shield surface emissivity}*

epsilon_8 = 1 *{surface emissivity of the OD of the inner vessel}*

T_1 =922 *{vacuum jacket temperature in K}*

T_8=Temperature(Argon,P=8.70,x=0) *{filter housing temperature in K}*

L_{gap} = 0.009525

$L_{gap,inches}$ = 0.009525 · 39.37

$$qrad_{12} = As \cdot \sigma \cdot \left[\frac{T_1^{\,4} - T_2^{\,4}}{\frac{1}{\varepsilon_1} + \frac{1}{\varepsilon_2} - 1} \right]$$

$$qrad_{12} + qconv_{12} = q_{total}$$

$$Ra_{L12} = g \cdot Beta12 \cdot \left[T_1 - T_2 \right] \cdot \frac{L12^{\,3}}{alpha12 \cdot nu12}$$

$$Beta12 = \frac{1}{T_{film12}}$$

$$T_{film12} = \frac{T_1 + T_2}{2}$$

$$L12 = \frac{L_{inches12}}{39.37}$$

$$L_{inches12} = 0.375$$

$$alpha12 = \frac{k12}{rho12 \cdot Cp12}$$

$$mu12 = rho12 \cdot nu12$$

$$k12 = \mathbf{k}\left[\text{'Air'}, T = T_{film12} \right]$$

$$rho12 = \rho\left[\text{'Air'}, T = T_{film12}, P = Patm12 \right]$$

$$Patm12 = 1.01325$$

$$Cp12 = \mathbf{Cp}\left[\text{'Air'}, T = T_{film12} \right]$$

$$mu12 = \mathbf{Visc}\left[\text{'Air'}, T = T_{film12} \right]$$

$$H_{over,L,ration12} = \frac{H_{inches12}}{L_{inches12}}$$

$$H_{inches12} = 65$$

$$H12 = \frac{H_{inches12}}{39.37}$$

$$Pr12 = \frac{nu12}{alpha12}$$

$$Nus_{12} = hbar12 \cdot \frac{L12}{k12}$$

$$qconv_{12} = hbar12 \cdot As \cdot \left[T_1 - T_2 \right]$$

$$Nus_{12} = \left[1 + \left(\frac{0.0665 \cdot Ra_{L12}^{\,[1/3]}}{1 + \left[\frac{9000}{Ra_{L12}} \right]^{1.4}} \right)^2 \right]^{[1/2]}$$

$$Nus_{12,check,horizontal} = 0.069 \cdot Ra_{L12}^{[1/3]} \cdot Pr12^{0.074}$$

$$qrad_{23} = As \cdot \sigma \cdot \left[\frac{T_2^{\,4} - T_3^{\,4}}{\frac{1}{\varepsilon_2} + \frac{1}{\varepsilon_3} - 1} \right]$$

$$qrad_{23} + qconv_{23} = q_{total}$$

$$Ra_{L23} = g \cdot Beta23 \cdot \left[T_2 - T_3 \right] \cdot \frac{L23^{\,3}}{alpha23 \cdot nu23}$$

$$Beta23 = \frac{1}{T_{film23}}$$

$$T_{film23} = \frac{T_2 + T_3}{2}$$

$$L23 = \frac{L_{inches23}}{39.37}$$

$$L_{inches23} = 0.375$$

$$alpha23 = \frac{k23}{rho23 \cdot Cp23}$$

$$mu23 = rho23 \cdot nu23$$

$$k23 = \mathbf{k}\left[\text{'Air'}, T = T_{film23} \right]$$

$$rho23 = \rho\left[\text{'Air'}, T = T_{film23}, P = Patm23 \right]$$

$$Patm23 = 1.01325$$

$$Cp23 = \mathbf{Cp}\left[\text{'Air'}, T = T_{film23} \right]$$

$$mu23 = \mathbf{Visc}\left[\text{'Air'}, T = T_{film23} \right]$$

$$H_{over,L,ration23} = \frac{H_{inches23}}{L_{inches23}}$$

$$H_{inches23} = 65$$

$$H23 = \frac{H_{inches23}}{39.37}$$

$$Pr23 = \frac{nu23}{alpha23}$$

$$Nus_{23} = hbar23 \cdot \frac{L23}{k23}$$

$$qconv_{23} = hbar23 \cdot As \cdot \left[T_2 - T_3 \right]$$

$$Nus_{23} = \left[1 + \left(\frac{0.0665 \cdot Ra_{L23}^{[1/3]}}{1 + \left[\frac{9000}{Ra_{L23}} \right]^{1.4}} \right)^2 \right]^{[1/2]}$$

$$qrad_{34} = As \cdot \sigma \cdot \left[\frac{T_3^{\,4} - T_4^{\,4}}{\frac{1}{\varepsilon_3} + \frac{1}{\varepsilon_4} - 1} \right]$$

$$qrad_{34} + qconv_{34} = q_{total}$$

$$Ra_{L34} = g \cdot Beta34 \cdot [T_3 - T_4] \cdot \frac{L34^3}{alpha34 \cdot nu34}$$

$$Beta34 = \frac{1}{T_{film34}}$$

$$T_{film34} = \frac{T_3 + T_4}{2}$$

$$L34 = \frac{L_{inches34}}{39.37}$$

$$L_{inches34} = 0.375$$

$$alpha34 = \frac{k34}{rho34 \cdot Cp34}$$

$$mu34 = rho34 \cdot nu34$$

$$k34 = \mathbf{k}[\text{'Air'}, T = T_{film34}]$$

$$rho34 = \rho[\text{'Air'}, T = T_{film34}, P = Patm34]$$

$$Patm34 = 1.01325$$

$$Cp34 = \mathbf{Cp}[\text{'Air'}, T = T_{film34}]$$

$$mu34 = \mathbf{Visc}[\text{'Air'}, T = T_{film34}]$$

$$H_{over,L,ration34} = \frac{H_{inches34}}{L_{inches34}}$$

$$H_{inches34} = 65$$

$$H34 = \frac{H_{inches12}}{39.37}$$

$$Pr34 = \frac{nu34}{alpha34}$$

$$Nus_{34} = hbar34 \cdot \frac{L34}{k34}$$

$$qconv_{34} = hbar34 \cdot As \cdot [T_3 - T_4]$$

$$Nus_{34} = \left[1 + \left(\frac{0.0665 \cdot Ra_{L34}^{[1/3]}}{1 + \left[\frac{9000}{Ra_{L34}} \right]^{1.4}} \right)^2 \right]^{[1/2]}$$

$$qrad_{45} = As \cdot \sigma \cdot \left[\frac{T_4^{\,4} - T_5^{\,4}}{\frac{1}{\varepsilon_4} + \frac{1}{\varepsilon_5} - 1} \right]$$

$$qrad_{45} + qconv_{45} = q_{total}$$

$$Ra_{L45} = g \cdot Beta45 \cdot \left[T_4 - T_5 \right] \cdot \frac{L45^3}{alpha45 \cdot nu45}$$

$$Beta45 = \frac{1}{T_{film45}}$$

$$T_{film45} = \frac{T_4 + T_5}{2}$$

$$L45 = \frac{L_{inches12}}{39.37}$$

$$L_{inches45} = 0.375$$

$$alpha45 = \frac{k45}{rho45 \cdot Cp45}$$

$$mu45 = rho45 \cdot nu45$$

$$k45 = \mathbf{k}\left[\text{'Air'}, T = T_{film45} \right]$$

$$rho45 = \rho\left[\text{'Air'}, T = T_{film45}, P = Patm45 \right]$$

$$Patm45 = 1.01325$$

$$Cp45 = \mathbf{Cp}\left[\text{'Air'}, T = T_{film45} \right]$$

$$mu45 = \mathbf{Visc}\left[\text{'Air'}, T = T_{film45} \right]$$

$$H_{over,L,ration45} = \frac{H_{inches45}}{L_{inches45}}$$

$$H_{inches45} = 65$$

$$H45 = \frac{H_{inches12}}{39.37}$$

$$Pr45 = \frac{nu45}{alpha45}$$

$$Nus_{45} = hbar45 \cdot \frac{L45}{k45}$$

$$qconv_{45} = hbar45 \cdot As \cdot \left[T_4 - T_5 \right]$$

$$Nus_{45} = \left[1 + \left(\frac{0.0665 \cdot Ra_{L45}^{\left[1/3\right]}}{1 + \left[\frac{9000}{Ra_{L45}} \right]^{1.4}} \right)^2 \right]^{\left[1/2\right]}$$

$$qrad_{56} = As \cdot \sigma \cdot \left[\frac{T_5^{\,4} - T_6^{\,4}}{\frac{1}{\varepsilon_5} + \frac{1}{\varepsilon_6} - 1} \right]$$

$$qrad_{56} + qconv_{56} = q_{total}$$

$$Ra_{L56} = g \cdot Beta56 \cdot \left[T_5 - T_6 \right] \cdot \frac{L56^{\,3}}{alpha56 \cdot nu56}$$

$$Beta56 = \frac{1}{T_{film56}}$$

$$T_{film56} = \frac{T_5 + T_6}{2}$$

$$L56 = \frac{L_{inches12}}{39.37}$$

$$L_{inches56} = 0.375$$

$$alpha56 = \frac{k56}{rho56 \cdot Cp56}$$

$$mu56 = rho56 \cdot nu56$$

$$k56 = \mathbf{k}\left[\text{'Air'}, T = T_{film56} \right]$$

$$rho56 = \rho\left[\text{'Air'}, T = T_{film56}, P = Patm56 \right]$$

$$Patm56 = 1.01325$$

$$Cp56 = \mathbf{Cp}\left[\text{'Air'}, T = T_{film56} \right]$$

$$mu56 = \mathbf{Visc}\left[\text{'Air'}, T = T_{film56} \right]$$

$$H_{over,L,ration56} = \frac{H_{inches56}}{L_{inches56}}$$

$$H_{inches56} = 65$$

$$H56 = \frac{H_{inches56}}{39.37}$$

$$Pr56 = \frac{nu56}{alpha56}$$

$$Nus_{56} = hbar56 \cdot \frac{L56}{k56}$$

$$qconv_{56} = hbar56 \cdot As \cdot [T_5 - T_6]$$

$$Nus_{56} = \left[1 + \left(\frac{0.0665 \cdot Ra_{L56}^{[1/3]}}{1 + \left[\frac{9000}{Ra_{L56}} \right]^{1.4}} \right)^2 \right]^{[1/2]}$$

$$qrad_{67} = As \cdot \sigma \cdot \left[\frac{T_6^{\,4} - T_7^{\,4}}{\frac{1}{\varepsilon_6} + \frac{1}{\varepsilon_7} - 1} \right]$$

$$qrad_{67} + qconv_{67} = q_{total}$$

$$Ra_{L67} = g \cdot Beta67 \cdot [T_6 - T_7] \cdot \frac{L67^3}{alpha67 \cdot nu67}$$

$$Beta67 = \frac{1}{T_{film67}}$$

$$T_{film67} = \frac{T_6 + T_7}{2}$$

$$L67 = \frac{L_{inches12}}{39.37}$$

$$L_{inches67} = 0.375$$

$$alpha67 = \frac{k67}{rho67 \cdot Cp67}$$

$$mu67 = rho67 \cdot nu67$$

$$k67 = \mathbf{k}[\text{'Air'}, T = T_{film67}]$$

$$rho67 = \rho[\text{'Air'}, T = T_{film67}, P = Patm67]$$

$$Patm67 = 1.01325$$

$$Cp67 = \mathbf{Cp}[\text{'Air'}, T = T_{film67}]$$

$$mu67 = \mathbf{Visc}[\text{'Air'}, T = T_{film67}]$$

$$H_{over,L,ration67} = \frac{H_{inches67}}{L_{inches67}}$$

$$H_{inches67} = 65$$

$$H67 = \frac{H_{inches67}}{39.37}$$

$$Pr67 = \frac{nu67}{alpha67}$$

$$Nus_{67} = hbar67 \cdot \frac{L67}{k67}$$

$$qconv_{67} = hbar67 \cdot As \cdot \left[T_6 - T_7 \right]$$

$$Nus_{67} = \left[1 + \left(\frac{0.0665 \cdot Ra_{L67}^{\left[1/3\right]}}{1 + \left[\frac{9000}{Ra_{L67}} \right]^{1.4}} \right)^2 \right]^{\left[1/2\right]}$$

$$qrad_{78} = As \cdot \sigma \cdot \left[\frac{T_7^{\,4} - T_8^{\,4}}{\frac{1}{\varepsilon_7} + \frac{1}{\varepsilon_8} - 1} \right]$$

$$qrad_{78} + qconv_{78} = q_{total}$$

$$Ra_{L78} = g \cdot Beta78 \cdot \left[T_7 - T_8 \right] \cdot \frac{L78^{\,3}}{alpha78 \cdot nu78}$$

$$g = 9.8$$

$$Beta78 = \frac{1}{T_{film78}}$$

$$T_{film78} = \frac{T_7 + T_8}{2}$$

$$L78 = \frac{L_{inches78}}{39.37}$$

$$L_{inches78} = 3.125$$

$$alpha78 = \frac{k78}{rho78 \cdot Cp78}$$

$$mu78 = rho78 \cdot nu78$$

$$k78 = \mathbf{k}\left[\text{'Air'}, T = T_{film78} \right]$$

$$rho78 = \rho\left[\text{'Air'}, T = T_{film78}, P = Patm78 \right]$$

$$Patm78 = 1.01325$$

$$Cp78 = \mathbf{Cp}\left[\text{'Air'}, T = T_{film78} \right]$$

$$mu78 = \mathbf{Visc}\left[\text{'Air'}, T = T_{film78} \right]$$

$$H_{over,L,ration78} = \frac{H_{inches78}}{L_{inches78}}$$

$$H_{inches78} = 65$$

$$H78 = \frac{H_{inches78}}{39.37}$$

$Pr78 = \frac{nu78}{alpha78}$

$Nus_{78} = hbar78 \cdot \frac{L78}{k78}$

$qconv_{78} = hbar78 \cdot As \cdot [T_7 - T_8]$

$As = 4.132$

$Nus_{78} = 0.046 \cdot Ra_{L78}^{[1/3]}$

$Nus_{78,check,horizontal} = 0.069 \cdot Ra_{L78}^{[1/3]} \cdot Pr78^{0.074}$

$\sigma = 5.67 \times 10^{-8}$

$\varepsilon_1 = 1$

$\varepsilon_2 = 0.1$

$\varepsilon_3 = 0.1$

$\varepsilon_4 = 0.1$

$\varepsilon_5 = 0.1$

$\varepsilon_6 = 0.1$

$\varepsilon_7 = 0.1$

$\varepsilon_8 = 1$

$T_1 = 922$

$T_8 = \mathbf{T}[\text{'Argon'}, P = 8.7, x = 0]$

SOLUTION

Unit Settings: [J]/[K]/[bar]/[kg]/[degrees]

alpha12 = 0.0001423 [m²/s]	alpha23 = 0.0001298 [m²/s]
alpha34 = 0.0001131 [m²/s]	alpha45 = 0.00009375 [m²/s]
alpha56 = 0.00007037 [m²/s]	alpha67 = 0.00004032 [m²/s]
alpha78 = 0.00001209 [m²/s]	As = 4.132 [m²]
Beta12 = 0.001108 [1/K]	Beta23 = 0.001175 [1/K]
Beta34 = 0.001283 [1/K]	Beta45 = 0.001444 [1/K]
Beta56 = 0.001719 [1/K]	Beta67 = 0.002373 [1/K]
Beta78 = 0.004557 [1/K]	Cp12 = 1121 [J/kg-K]
Cp23 = 1110 [J/kg-K]	Cp34 = 1094 [J/kg-K]
Cp45 = 1073 [J/kg-K]	Cp56 = 1047 [J/kg-K]
Cp67 = 1016 [J/kg-K]	Cp78 = 1002 [J/kg-K]
ε_1 = 1	ε_2 = 0.1
ε_3 = 0.1	ε_4 = 0.1
ε_5 = 0.1	ε_6 = 0.1
ε_7 = 0.1	ε_8 = 1

g = 9.8 [m/s^2]
H_{23} = 1.651 [m]
H_{45} = 1.651 [m]
H_{67} = 1.651 [m]
$hbar_{12}$ = 6.552 [W/*m^2 * K)]
$hbar_{34}$ = 5.884 [W/*m^2 * K)]
$hbar_{56}$ = 4.693 [W/*m^2 * K)]
$hbar_{78}$ = 3.959 [W/*m^2 * K)]
$H_{inches23}$ = 65 [in]
$H_{inches45}$ = 65 [in]
$H_{inches67}$ = 65 [in]
$H_{over,L,ration12}$ = 173.3 [ ]
$H_{over,L,ration34}$ = 173.3 [ ]
$H_{over,L,ration56}$ = 173.3 [ ]
$H_{over,L,ration78}$ = 20.8 [ ]
k_{23} = 0.05979 [W/m-K]
k_{45} = 0.05126 [W/m-K]
k_{67} = 0.03431 [W/m-K]
L_{12} = 0.009525 [m]
L_{34} = 0.009525 [m]
L_{56} = 0.009525 [m]
L_{78} = 0.07938 [m]
$L_{gap,inches}$ = 0.375 [in]
$L_{inches23}$ = 0.375 [in]
$L_{inches45}$ = 0.375 [in]
$L_{inches67}$ = 0.375 [in]
mu_{12} = 0.00003926 [kg/m-s]
mu_{34} = 0.00003581 [kg/m-s]
mu_{56} = 0.00002963 [kg/m-s]
mu_{78} = 0.00001454 [kg/m-s]
nu_{23} = 0.00009119 [m^2/s]
nu_{45} = 0.00006517 [m^2/s]
nu_{67} = 0.00002839 [m^2/s]
Nus_{12} = 1
Nus_{23} = 1
Nus_{45} = 1
Nus_{67} = 1.021
$Nus_{78,check,horizontal}$ = 23.66 [K$^{0.3333}$]
$Patm_{23}$ = 1.013 [bar]
$Patm_{45}$ = 1.013 [bar]
$Patm_{67}$ = 1.013 [bar]
Pr_{12} = 0.7054
Pr_{34} = 0.6987
Pr_{56} = 0.6937
Pr_{78} = 0.7474
$qconv_{23}$ = 1702 [W]
$qconv_{45}$ = 2124 [W]
$qconv_{67}$ = 2943 [W]
$qrad_{12}$ = 2654.795 [W]
$qrad_{34}$ = 1813 [W]
$qrad_{56}$ = 1243 [W]
$qrad_{78}$ = 256.1 [W]
Ra_{L12} = 25.26
Ra_{L34} = 94.22
Ra_{L56} = 536.4
Ra_{L78} = 4.300E+07 [K]

H_{12} = 1.651 [m]
H_{34} = 1.651 [m]
H_{56} = 1.651 [m]
H_{78} = 1.651 [m]
$hbar_{23}$ = 6.278 [W/*m^2 * K)]
$hbar_{45}$ = 5.382 [W/*m^2 * K)]
$hbar_{67}$ = 3.676 [W/*m^2 * K)]
$H_{inches12}$ = 65 [in]
$H_{inches34}$ = 65 [in]
$H_{inches56}$ = 65 [in]
$H_{inches78}$ = 65 [in]
$H_{over,L,ration23}$ = 173.3 [ ]
$H_{over,L,ration45}$ = 173.3 [ ]
$H_{over,L,ration67}$ = 173.3 [ ]
k_{12} = 0.06241 [W/m-K]
k_{34} = 0.05605 [W/m-K]
k_{56} = 0.0447 [W/m-K]
k_{78} = 0.0195 [W/m-K]
L_{23} = 0.009525 [m]
L_{45} = 0.009525 [m]
L_{67} = 0.009525 [m]
L_{gap} = 0.009525 [m]
$L_{inches12}$ = 0.375 [in]
$L_{inches34}$ = 0.375 [in]
$L_{inches56}$ = 0.375 [in]
$L_{inches78}$ = 3.125 [in]
mu_{23} = 0.00003784 [kg/m-s]
mu_{45} = 0.00003321 [kg/m-s]
mu_{67} = 0.00002378 [kg/m-s]
nu_{12} = 0.0001004 [m^2/s]
nu_{34} = 0.00007903 [m^2/s]
nu_{56} = 0.00004881 [m^2/s]
nu_{78} = 0.000009036 [m^2/s]
$Nus_{12,check,horizontal}$ = 0.1973
Nus_{34} = 1
Nus_{56} = 1
Nus_{78} = 16.12 [ ]
$Patm_{12}$ = 1.013 [bar]
$Patm_{34}$ = 1.013 [bar]
$Patm_{56}$ = 1.013 [bar]
$Patm_{78}$ = 1.013 [bar]
Pr_{23} = 0.7024
Pr_{45} = 0.6951
Pr_{67} = 0.7042
$qconv_{12}$ = 1042 [W]
$qconv_{34}$ = 1884 [W]
$qconv_{56}$ = 2454 [W]
$qconv_{78}$ = 3441 [W]
$qrad_{23}$ = 1995 [W]
$qrad_{45}$ = 1573 [W]
$qrad_{67}$ = 753.3 [W]
q_{total} = 3696.784 [W]
Ra_{L23} = 55.17
Ra_{L45} = 191.1
Ra_{L67} = 3401
rho_{12} = 0.391 [kg/m^3]

$rho23 = 0.415$ [kg/m^3]
$rho45 = 0.5096$ [kg/m^3]
$rho67 = 0.8376$ [kg/m^3]
$\sigma = 5.670E-08$ [W / (m^2 * K^4)]
$T_2 = 883.513$ [K]
$T_4 = 740.4$ [K]
$T_6 = 518.4$ [K]
$T_8 = 114.2584$ [K]
$T_{film23} = 850.7$ [K]
$T_{film45} = 692.7$ [K]
$T_{film67} = 421.5$ [K]
$rho34 = 0.4531$ [kg/m^3]
$rho56 = 0.6069$ [kg/m^3]
$rho78 = 1.609$ [kg/m^3]
$T_1 = 922$ [K]
$T_3 = 817.9$ [K]
$T_5 = 644.9$ [K]
$T_7 = 324.592171$ [K]
$T_{film12} = 902.8$ [K]
$T_{film34} = 779.2$ [K]
$T_{film56} = 581.6$ [K]
$T_{film78} = 219.4$ [K]

39 potential unit problems were detected.
EES suggested units (shown in purple) for Nus_78_check_horizontal .

Temperature (°R)	Pressure (psia)	Cp (Btu/lbm-°R)
207	126.2	0.18071
367.6	126.2	0.13121
529.9	126.2	0.12698
691.3	126.2	0.12573
852.8	126.2	0.1252
1014	126.2	0.12492
1176	126.2	0.12476
1337	126.2	0.12466
1499	126.2	0.12459
1660	126.2	0.12454

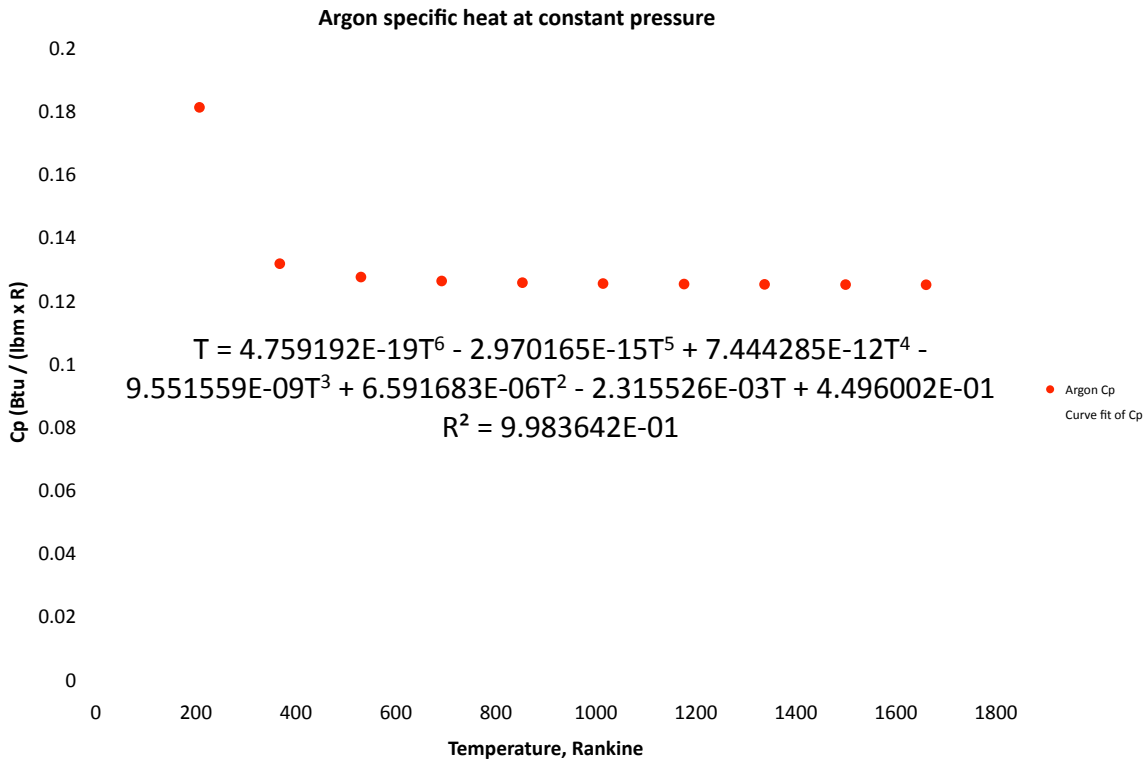

$$Cp_{average} = \frac{1}{1660 - 205.7}\int_{205.7}^{1660}(4.759192E-19..7)T^6 - (2.970165E-15)T^5 + (7.444285E-12)T^4 - (9.551559E-09)T^3 + (6.591683E-06)T^2 - (2.315526E-03)T + 4.496002E-01 = 0.1282\frac{\text{Btu}}{\text{lbm x }^{o}\text{R}}$$

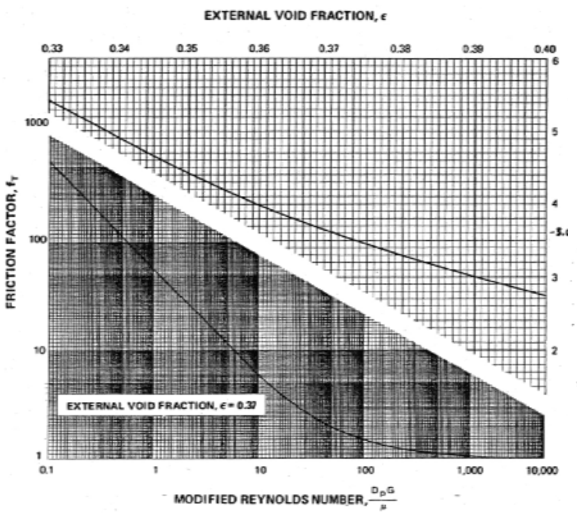

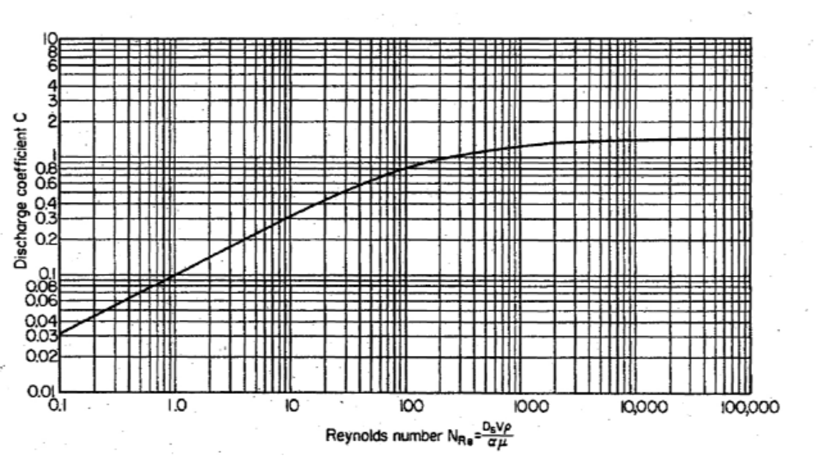

{--}
{Filter bed pressure drop for LAPD - both filters during a relief valve event}
{Assume vapor travels thru the entire bed}
{units of F, psia}

G = W / A_filter {lb/(hr*ft^2) superficial mass velocity for filter bed pressure drop calculation}

A_filter = (PI/4)*(12.39/12)^2 {ft^2 cross sectional area of filter, 12 inch SCH 10 pipe}

L_filter = 40/12 {ft, length of filter bed, see drawing 466500 }

{Ergun equation for the calculation of pressure drop in adsorbent beds from Union Carbide Fixed-Bed Pressure Drop Calculations , the beds have different diameter beads}
ft_filter_O2*Ct_O2*(G^2)*L_filter/(rho_GAr*Dp_oxygen)=dP_filter_O2 {oxygen filter bed pressure drop psi}

ft_filter_MS*Ct_MS*(G^2)*L_filter/(rho_GAr*Dp_molecular)=dP_filter_MS {molecular sieve filter bed pressure drop psi}

Dp_molecular=0.00666 {ft, average diameter of molecular sieve particles, 8 x 12 mesh, 8 mesh = 0.0937 inches = 0.00781 ft, 12 mesh = 0.0661 inches = 0.00551 ft, average = 0.08 inches = 0.00666 ft}
Dp_oxygen=0.00336 {ft, average diameter of oxygen filter particles 14x28 mesh, 14 mesh = 0.0555 inches, 28 mesh = 0.02512 inches, average = 0.0403 inches = 0.003359 feet }

{pressure drop coefficient (ft)(sq hr)/(sq in), determine from graph which has Ct plotted as a function of external void fraction, 3.6E-10 for the 0.37 void fraction Union Carbide reference suggests for mole sieve}
Ct_O2=3.6E-10
Ct_MS=3.6E-10

{friction factor based on modified Reynolds #, get from graph}
ft_filter_O2 = INTERPOLATE('ft','Column1','Column2',Column1=Re_oxygen) {look up data from digitized plot in table}
ft_filter_MS = INTERPOLATE('ft','Column1','Column2',Column1=Re_molecular) {look up data from digitized plot in table}

Re_molecular=Dp_molecular*G/mu {Reynolds number for molecular sieve}

Re_oxygen=Dp_oxygen*G/mu {Reynolds number for oyxgen filter}

mu =VISCOSITY(Argon,T=T_vent,P=P_GAr) {argon viscosity at flowing conditions lb/hr-ft}

rho_GAr = Density(Argon,T=T_vent,P=P_GAr) {density of argon gas at flowing conditions in the filter, lb/ft^3}

T_vent = 80.3 {temperature of the venting gas, F, the gas would be cold because it originates from vaporized liquid such that

room temperature is conservative}

P_GAr = 126.2 *{relief valve flow rating pressure psia}*

rho_stp = Density(Argon,T=70,P=14.7) *{density @ std conditions for SCFH calc}*

W = GAr_SCFH * rho_stp *{relate mass flow to SCFH}*

W = 419.5 *{venting argon mass flow rate lbm/hr, from relief valve calcs, fire case}*

{---}

{Filter screen pressure drop for LAPD filter during a relief event}
{LAPD top filter screen is FNAL drawing # 489456}
{Using ImageJ software the slot open area is 32 in^2, these slots are then filled with 2 screens}
{Screen 1 McMaster #85385T425 60x60 mesh, 0.0075" wire diameter, 0.009*" opening width, 30.5% open area}*
{Screen 2 McMaster #85385T369 8x8 mesh, 0.035" wire diameter, 0.09*" opening width, 51.8% open area}*
{Screen pressure drop reference is the Chemical Engineers Handbook by Perry and Chilton, 5th Edition, page 5-37}
{The flow thru a screen can be considered as flow thru a number of orifices or nozzles in parallel.
Thus the pressure drop or head loss across a screen can be computed from an orifice type equation}
{Experimental data indicates that for a series of screens the over-all head loss is directly proportional to the number of screens in series
and is not affected by either the spacing between successive screens or by their orientation with respect to one another}

{For the filter screens the pressure drop is computed across each screen}

DELTA_h_1 = (n/C_1^2)*((1-alpha_1^2)/alpha_1^2)*(V^2/(2*g_c)) *{screen 1 head loss in ft of flowing liquid, equation 5-100}*
DELTAP_screen_1 = DELTA_h_1*rho_GAr/144 *{convert screen 1 head loss from feet to psi}*

DELTA_h_2 = (n/C_2^2)*((1-alpha_2^2)/alpha_2^2)*(V^2/(2*g_c)) *{screen 2 head loss in ft of flowing liquid, equation 5-100}*
DELTAP_screen_2 = DELTA_h_2*rho_GAr/144 *{convert screen 2 head loss from feet to psi}*

n = 1 *{number of screens in series, dimensionless, each screen is computed individually since the screens are different sizes}*

C_1 = INTERPOLATE('cs','Column1','Column2',Column1=N_Re_1) *{screen 1 discharge coefficient, dimensionless, function of the Reynolds number see Figure 5-44}*
C_2 = INTERPOLATE('cs','Column1','Column2',Column1=N_Re_2) *{screen 2 discharge coefficient, dimensionless, function of the Reynolds number see Figure 5-44}*

alpha_1 = 0.305 *{fractional free projected area of screen 1, dimensionless}*
alpha_2 = 0.518 *{fractional free projected area of screen 2, dimensionless}*

V = W/(rho*3600*A_screen) *{superficial velocity ahead of the screen, ft/sec}*

A_screen = 32/144 *{flow has to go thru slots, estimate upstream area as the slot area of 32 in^2 and convert to ft^2}*

g_c = 32.17 *{dimensional constant, 32.17 (lb.)(ft.)/(lb. force)(sec^2) }*

N_Re_1 = D_s_1*V*rho/(alpha_1*mu_screen) *{Screen 1 reynolds number }*
N_Re_2 = D_s_2*V*rho/(alpha_2*mu_screen) *{Screen 2 reynolds number }*

D_s_1 = 0.009/12 *{aperture width screen 1, feet}*
D_s_2 = 0.09/12 *{aperture width screen 2, feet}*

rho = rho_GAr *{fluid denisty at flowing conditions, lb/ft^3}*

mu_screen = VISCOSITY(Argon,T=T_vent,P=P_GAr)/3600 *{fluid viscosity at flowing conditions lb./(ft.)(sec.), converted from EES lb/hr-ft units}*

{---}

$$G = \frac{W}{A_{filter}}$$

$$A_{filter} = \frac{\pi}{4} \cdot \left[\frac{12.39}{12}\right]^2$$

$$L_{filter} = \frac{40}{12}$$

$$ft_{filter,O2} \cdot Ct_{O2} \cdot G^2 \cdot \frac{L_{filter}}{\rho_{GAr} \cdot Dp_{oxygen}} = dP_{filter,O2}$$

$$ft_{filter,MS} \cdot Ct_{MS} \cdot G^2 \cdot \frac{L_{filter}}{\rho_{GAr} \cdot Dp_{molecular}} = dP_{filter,MS}$$

$$Dp_{molecular} = 0.00666$$

$$Dp_{oxygen} = 0.00336$$

$$Ct_{O2} = 3.6 \times 10^{-10}$$

$$Ct_{MS} = 3.6 \times 10^{-10}$$

$$ft_{filter,O2} = \textbf{Interpolate}\left[\text{'ft', 'Column1', 'Column2', 'Column1'} = Re_{oxygen}\right]$$

$$ft_{filter,MS} = \textbf{Interpolate}\left[\text{'ft', 'Column1', 'Column2', 'Column1'} = Re_{molecular}\right]$$

$$Re_{molecular} = Dp_{molecular} \cdot \frac{G}{\mu}$$

$$Re_{oxygen} = Dp_{oxygen} \cdot \frac{G}{\mu}$$

$$\mu = \textbf{Visc}\left[\text{'Argon'}, T = T_{vent}, P = P_{GAr}\right]$$

$$\rho_{GAr} = \rho\left[\text{'Argon'}, T = T_{vent}, P = P_{GAr}\right]$$

$$T_{vent} = 80.3$$

$$P_{GAr} = 126.2$$

$$\rho_{stp} = \rho\left[\text{'Argon'}, T = 70, P = 14.7\right]$$

$$W = GAr_{SCFH} \cdot \rho_{stp}$$

$$W = 419.5$$

$$\Delta_{h,1} = \frac{n}{C_1^{\,2}} \cdot \left[\frac{1 - \alpha_1^{\,2}}{\alpha_1^{\,2}}\right] \cdot \frac{V^2}{2 \cdot g_c}$$

$$\Delta P_{screen,1} = \Delta_{h,1} \cdot \frac{\rho_{GAr}}{144}$$

$$\Delta_{h,2} = \frac{n}{C_2^{\,2}} \cdot \left[\frac{1 - \alpha_2^{\,2}}{\alpha_2^{\,2}} \right] \cdot \frac{V^2}{2 \cdot g_c}$$

$$\Delta P_{screen,2} = \Delta_{h,2} \cdot \frac{\rho_{GAr}}{144}$$

$$n = 1$$

$$C_1 = \textbf{Interpolate}\left[\text{'cs', 'Column1', 'Column2', 'Column1'} = N_{Re,1}\right]$$

$$C_2 = \textbf{Interpolate}\left[\text{'cs', 'Column1', 'Column2', 'Column1'} = N_{Re,2}\right]$$

$$\alpha_1 = 0.305$$

$$\alpha_2 = 0.518$$

$$V = \frac{W}{\rho \cdot 3600 \cdot A_{screen}}$$

$$A_{screen} = \frac{32}{144}$$

$$g_c = 32.17$$

$$N_{Re,1} = D_{s,1} \cdot V \cdot \frac{\rho}{\alpha_1 \cdot \mu_{screen}}$$

$$N_{Re,2} = D_{s,2} \cdot V \cdot \frac{\rho}{\alpha_2 \cdot \mu_{screen}}$$

$$D_{s,1} = \frac{0.009}{12}$$

$$D_{s,2} = \frac{0.09}{12}$$

$$\rho = \rho_{GAr}$$

$$\mu_{screen} = \frac{\textbf{Visc}\left[\text{'Argon'}, T = T_{vent}, P = P_{GAr}\right]}{3600}$$

SOLUTION

Unit Settings: [F]/[psia]/[lbm]/[degrees]

α_1 = 0.305	α_2 = 0.518
A_{filter} = 0.8373 [ft^2]	A_{screen} = 0.2222 [ft^2]
Ct_{MS} = 3.600E-10 [ft*hr^2/in^2]	Ct_{O2} = 3.600E-10 [ft*hr^2/in^2]
C_1 = 0.7852	C_2 = 1.155
$\Delta P_{screen,1}$ = 0.0005369 [lbm/in^2]	$\Delta P_{screen,2}$ = 0.0000694 [lbm/in^2]
$\Delta_{h,1}$ = 0.08846 [ft]	$\Delta_{h,2}$ = 0.01143 [ft]
$dP_{filter,MS}$ = 0.09197 [lb$_m$/in^2]	$dP_{filter,O2}$ = 0.2614 [lb$_m$/in^2]
$Dp_{molecular}$ = 0.00666 [ft]	Dp_{oxygen} = 0.00336 [ft]
$D_{s,1}$ = 0.00075 [ft]	$D_{s,2}$ = 0.0075 [ft]
$ft_{filter,MS}$ = 1.777	$ft_{filter,O2}$ = 2.549

G = 501.028 [lb_m/hr-ft^2]
g_c = 32.17 [lbm-ft/lbm-sec^2]
μ = 0.05534 [lb_m/ft-hr]
n = 1
$N_{Re,2}$ = 493.9
$Re_{molecular}$ = 60.3
ρ = 0.874 [lb_m/ft^3]
ρ_{stp} = 0.1034 [lb_m/ft^3]
V = 0.5999 [ft/sec]

GAr_{SCFH} = 4058 [ft^3/hr]
L_{filter} = 3.333 [ft]
μ_{screen} = 0.00001537 [lb_m/ft-sec]
$N_{Re,1}$ = 83.88
P_{GAr} = 126.2 [psia]
Re_{oxygen} = 30.42
ρ_{GAr} = 0.874 [lb_m/ft^3]
T_{vent} = 80.3 [F]
W = 419.5 [lb_m/hr]

4 potential unit problems were detected.

Lookup Table: ft

	Column1	Column2
Row 1	0.5761	100.6
Row 2	0.7349	78.51
Row 3	1.042	54.66
Row 4	1.417	40.49
Row 5	1.988	29.07
Row 6	2.618	22.21
Row 7	4.084	14.53
Row 8	5.853	10.12
Row 9	7.387	7.892
Row 10	9.424	6.093
Row 11	12.28	4.953
Row 12	15.5	4.111
Row 13	19.78	3.412
Row 14	25.78	2.831
Row 15	33.24	2.424
Row 16	44.25	2.032
Row 17	58.91	1.794
Row 18	78.44	1.617
Row 19	106.7	1.473
Row 20	139.1	1.355
Row 21	187.1	1.26
Row 22	260	1.183
Row 23	342.5	1.135
Row 24	496.5	1.077
Row 25	654.3	1.076
Row 26	899.4	1.042
Row 27	1277	1.02

Lookup Table: cs

	Column1	Column2
Row 1	0.0986	0.0316
Row 2	0.1969	0.0447
Row 3	0.2944	0.0553
Row 4	0.3971	0.0637
Row 5	0.4932	0.072
Row 6	0.6932	0.083
Row 7	0.9845	0.1007
Row 8	1.945	0.1408
Row 9	2.909	0.1725
Row 10	3.923	0.2009
Row 11	5.928	0.2461
Row 12	9.828	0.3109

Lookup Table: cs

	Column1	Column2
Row 13	19.62	0.4392
Row 14	39.17	0.5899
Row 15	68.39	0.7378
Row 16	99.18	0.8171
Row 17	198.1	0.982
Row 18	387.6	1.122
Row 19	592	1.17
Row 20	971.9	1.257
Row 21	1942	1.366
Row 22	3801	1.382
Row 23	9833	1.429
Row 24	19445	1.476
Row 25	38857	1.494
Row 26	95475	1.498

```
{This sheet calculates the inlet pressure drop for the LArIAT filter vessel relief valve}

{EES will not calculate argon properties above 1260 R}
{Use a curve fit of estimated NIST properties for temperatures above 1260 R based on a constant pressure which his a decent
approximation}
{If pressure is very far from 126 psia this will not work!}
PROCEDURE v_i_high_T_PRO(T_i,P_i :v_i)
If (T_i < 1259) THEN
v_i = Volume(Argon,T=T_i,P=P_i)  {ft^3/lb}
ELSE
v_i = (-2.747072E-09)*(T_i)^2 + (2.144299E-03)*T_i - 4.933726E-03
ENDIF
END

{This sheet calculates the inlet pressure drop for the LAPD filter vessel relief valve}

{CGA 6.1.4 c) used }
P_i = P - (3.36E-6)*f*l*(W^2)*v/(d^5)  {psia}

{pressure drop thru the relief valve inlet piping}
DELTAP = P - P_i   {psid}

{mass flow rate calculated from 6.1.4 a)  }
W = 419.5  {valve name plate capacity}  {419.5 required} {lbm/hr}

{average temperature between the flow rated saturation temperature and the inlet temperature of the valve calculated with 6.1.4 b)  }
T_average = (T_i + T_s)/2   {R}

{6.1.4 b temperature at the inlet of the relief valve}
T_i = 2145 - (2145 - T_s) / EXP ( (  5.24*1.315*(L_cap)/(W*C_p)  ) )  {R}

{Average specific heat btu/lbm-Rat constant pressure between Ts and 1660 R}
C_p = 0.1281  {btu/lbm-R}

 {linear length of pipe to the inlet of the relief valve}
L_cap = 11  {ft}

L_ft = L_cap  {ft}

{Saturation temperature deg. R at the flow rating pressure}
T_s =Temperature(Argon,P=P,x=1)   {R}

{Specific volume of the fluid being relieved in ft^3/lb at the flow rating pressure and the average temperature between Ti and Ts}
v=Volume(Argon,T=T_average,P=P)  {ft^3/lb}

CALL v_i_high_T_PRO(T_i,P_i :v_i)

{CGA correction factor}
F_CGA = SQRT(  (P_i*v_i)/(P*v_CGA))

{Specific volume of the fluid being relieved in ft^3/lb at the flow rating pressure and the saturation temperature }
v_CGA=Volume(Argon,x=1,P=P)  {ft^3/lb}

{psia, flow rating pressure}
P = 126.2 {psia}

{internal diameter of the piping leading up to the relief valve}
```

d = 1.097 *{inches}*

D_ft = d / 12 *{feet}*

{friction factor used in 6.1.4 c, set equal to friction factor calculated by the Colebrook equation}
f = f_ci *{dimensionless}*

{l = 6}

{Resistance coefficients from Crane 410 }
K = num_elbows*20*f_T *{elbows}* + 20*f_T *{tee run}* + 60*f_T *{tee branch}* + f*L_ft/D_Ft *{straight pipe}* + 0.78 *{inward projecting inlet}*
{K is unitless}

{calculate the equivalent length l that includes the tees, elbows, and inlet between the vessel and relief valve piping}
K = f*l/D_ft

num_elbows = 5 *{number of elbows in the path from the vessel to the relief valve}*

{Colebrook equation for the turbulent friction factor, Crane 410 equation 1-20, set Reynolds number to 1E8 to get a fully turbulent friction factor f_T}
1/SQRT(f_T) = -2.0*log10(epsilon/(3.7*D_ft) + 2.51/(Re_f_T*SQRT(f_T)))
Re_f_T = 1E8 *{A large Reynolds number is input to get the fully turbulent friction factor}*

{Reynolds # for friction factor f in 6.1.4 c}
Re = 6.315*W/(d*mu) *{dimesionless}*

{absolute (dynamic) viscosity in centipoise }
mu=Viscosity(Argon,T=T_average,P=P)/2.42 *{cp, converted from lb/ft-hr by dividing by 2.42}*

{Colebrook equation which offers an implicit iterative solution for the turbulent friction factor}
1/SQRT(f_ci) = -2.0*log10(epsilon/(3.7*D_ft) + 2.51/(Re*SQRT(f_ci))) *{dimensionless}*

{absolute roughness in feet for drawn tubing = 0.000,005, for commericial steel = 0.00015}
epsilon = 0.000015

Procedure $\mathbf{v}_{i,high,T,PRO}$ (T_i, P_i : v_i)

If $[T_i < 1259]$ Then

$v_i := \mathbf{v}$ ['Argon' , T = T_i , P = P_i]

Else

$v_i := -2.747072 \times 10^{-9} \cdot T_i^2 + 0.002144299 \cdot T_i - 0.004933726$

EndIf

End $\mathbf{v}_{i,high,T,PRO}$

$$P_i = P - 0.00000336 \cdot f \cdot l \cdot W^2 \cdot \frac{v}{d^5}$$

$$\Delta P = P - P_i$$

$$W = 419.5$$

$$T_{average} = \frac{T_i + T_s}{2}$$

$$T_i = 2145 - \left[\frac{2145 - T_s}{\mathbf{exp}\left(5.24 \cdot 1.315 \cdot \frac{L_{cap}}{W \cdot C_p}\right)} \right]$$

$$C_p = 0.1281$$

$$L_{cap} = 11$$

$$L_{ft} = L_{cap}$$

$$T_s = \mathbf{T}\left[\text{'Argon'}, P = P, x = 1\right]$$

$$v = \mathbf{v}\left[\text{'Argon'}, T = T_{average}, P = P\right]$$

Call $\mathbf{v}_{i,high,T,PRO}\left[T_i, P_i : v_i\right]$

$$F_{CGA} = \sqrt{\frac{P_i \cdot v_i}{P \cdot v_{CGA}}}$$

$$v_{CGA} = \mathbf{v}\left[\text{'Argon'}, x = 1, P = P\right]$$

$$P = 126.2$$

$$d = 1.097$$

$$D_{ft} = \frac{d}{12}$$

$$f = f_{ci}$$

$$K = num_{elbows} \cdot 20 \cdot f_T + 20 \cdot f_T + 60 \cdot f_T + f \cdot \frac{L_{ft}}{D_{ft}} + 0.78$$

$$K = f \cdot \frac{l}{D_{ft}}$$

$$num_{elbows} = 5$$

$$\frac{1}{\sqrt{f_T}} = -2 \cdot \mathbf{log}\left[\frac{\varepsilon}{3.7 \cdot D_{ft}} + \frac{2.51}{Re_{f,T} \cdot \sqrt{f_T}}\right]$$

$$Re_{f,T} = 1 \times 10^8$$

$$Re = 6.315 \cdot \frac{W}{d \cdot \mu}$$

$$\mu = \frac{\mathbf{Visc}\left[\text{'Argon'}, T = T_{average}, P = P\right]}{2.42}$$

$$\frac{1}{\sqrt{f_{ci}}} = -2 \cdot \mathbf{log}\left[\frac{\varepsilon}{3.7 \cdot D_{ft}} + \frac{2.51}{Re \cdot \sqrt{f_{ci}}}\right]$$

$\varepsilon = 0.000015$

SOLUTION

Unit Settings: [R]/[psia]/[lbm]/[degrees]

C_p = 0.1281 [btu/lbm-R]	d = 1.097 [in]	ΔP = 0.3805 [psid]
D_{ft} = 0.09142 [ft]	ε = 0.000015	f = 0.02018
F_{CGA} = 3.109	f_{ci} = 0.02018	f_T = 0.01321
K = 5.585	l = 25.3 [ft]	L_{cap} = 11 [ft]
L_{ft} = 11 [ft]	μ = 0.03522639 [cp]	num_{elbows} = 5
P = 126.2000 [psia]	P_i = 125.819490 [psia]	Re = 68554
$Re_{f,T}$ = 1.000E+08	$T_{average}$ = 938.7 [R]	T_i = 1672 [R]
T_s = 205.7 [R]	v = 2.002 [ft^3/lb]	v_{CGA} = 0.3685 [ft^3/lb]
v_i = 3.572 [ft^3/lb]	W = 419.50000 [lb/hr]	

13 potential unit problems were detected.

Eden Cryogenics LLC
8449 Rausch Drive
Plain City, Ohio 43064

Certification of Material, Testing, and Cleaning: Documentation and Conformance

Customer FERMI RESEARCH ALLIANCE, LLC	Purchase Order No. 588593	Eden Cryogenics W.O. No. BC-02128
Equipment Description: Liquid Argon TPC Purity Demo Purifier Vessel Part No. BC-02128-5800-01		

This document certifies that Eden Cryogenics, LLC has performed and or verified the noted tests and materials. Testing and materials meet or exceed the requirements of the noted purchase order.

CERTIFICATION OF MATERIALS

☑ All materials for valves / piping / equipment are new and unused.

Verifiable chemical and physical mill certification is ☑ Enclosed ☐ On file at Eden Cryogenics

Materials:

☐ Soft goods have batch lot numbers and cure dates ☐ Enclosed ☐ On file at Eden Cryogenics

CERTIFICATION OF TESTS

☑ Pressure tested ☑ Pneumatic ☐ Hydrostatic @ 188 PSIG (Inner Vessel)

☐ Valves pressure tested across the seat @ PSIG

☑ 5 % of all butt weld joints radiographed for Work Order

☐ Reader sheets enclosed ☐ Radiographs enclosed ☑ Documentation on file at Eden Cryogenics

☑ Mass spectrometer leak tested at 1x10-9 scc/sec helium with no leaks, (Outer Vessel)

☐ Other tests: ☐ LN2 cold shock test ☐ Other

☐ Other

CLEANING

☐ Commercially cleaned ☑ Commercially oxygen cleaned ☐ Particulate cleaned

Cleaning specification:

Eden Cryogenics, LLC certifies the noted documentation and performance testing.

Project Manager [signature] **Date** 06/30/10

Quality Control Randy Bashaw LTT **Date** 6/30/10

Eden Form 1003-11/07

Table on Contents

Section 1: Drawings

Section 2: Material Certification

Section 3: Material C of C's

Section 4: Welder Certification

Section 5: Inner Vessel Code Calculations

Section 6: Outer Vessel Code Calculations

Section 7: Test Reports

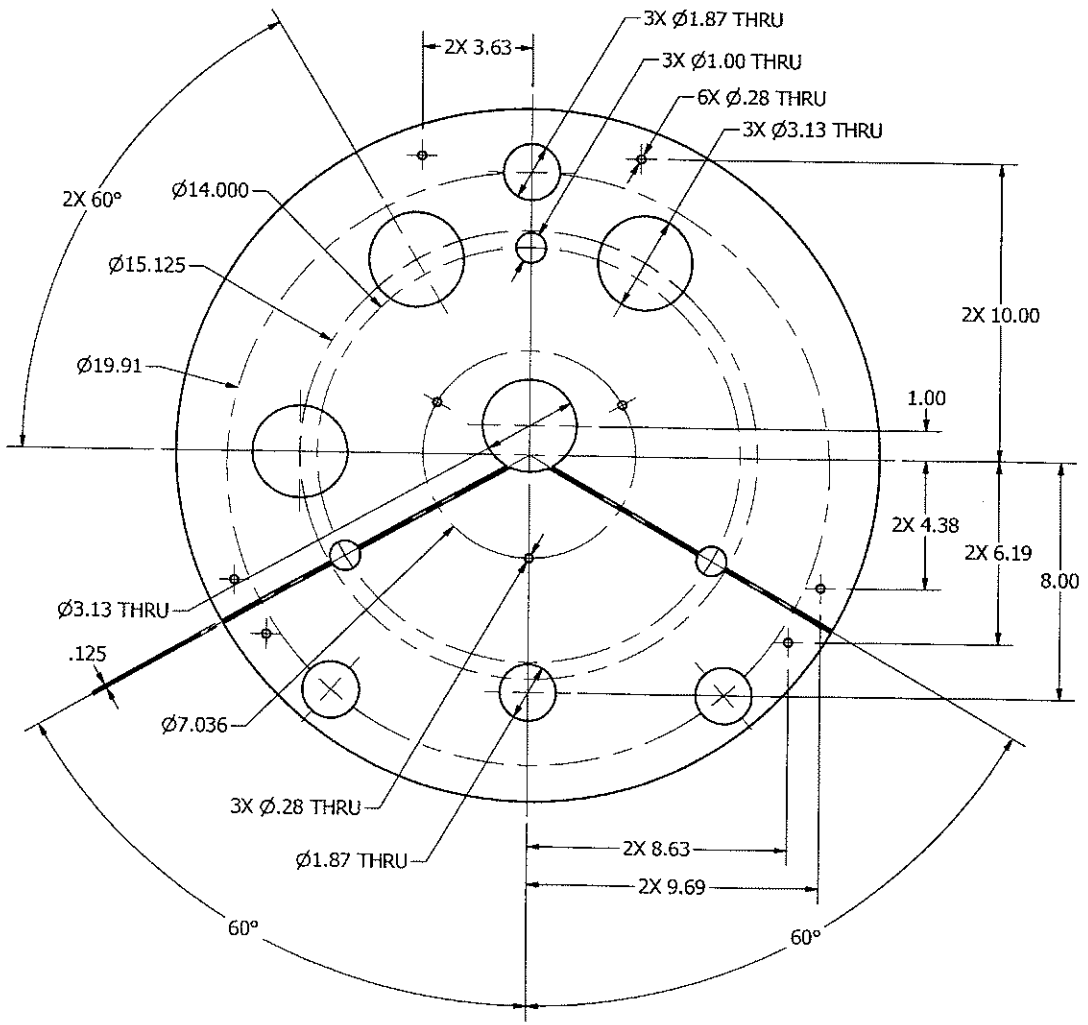

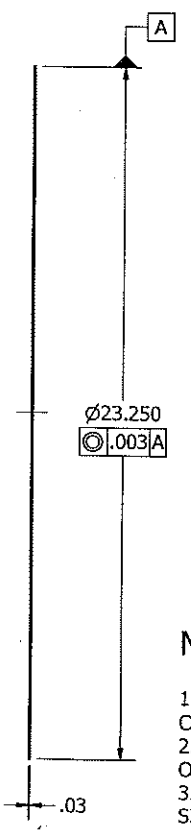

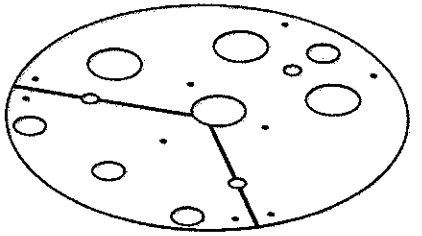

SCALE 1 : 7

NOTE:

1. BREAK ALL SHARP EDGES AND CORNERS TO R.005.
2. VENDOR TO MARK PART NUMBER ON HEAT SHIELD.
3. PUT PROTECTIVE FILM ON EACH SIDE TO PROTECT FINISH.

MATERIAL: PL 23 1/4 Ø X 1/32 THK
Aluminum-6061 ASTM B209
T4 TEMPER

FINISH: #8 MIRROR FINISH

NOTES: (UNLESS OTHERWISE SPECIFIED)
1. DIMENSIONS ARE IN INCHES, CONFORMING TO ASME Y14.5-1994. ALL DIMENSIONS APPLY AFTER FINISH.
2. DE-BURR AND BREAK ALL SHARP EDGES AND CORNERS TO R.015 MAX.
3. SURFACE TEXTURE/FINISH #4 BWS

TOLERANCES:
X.X ± .030
X.XX ± .010
X.XXX ± .005
ANGULAR ± 1/2°

eden CRYOGENICS
8445 RAUSCH DRIVE
PLAIN CITY, OH 43064
614.873.3949
www.edencryogenics.com

INFORMATION SHOWN ON THIS DRAWING IS PROPRIETARY AND THE SOLE PROPERTY OF EDEN CRYOGENICS, LLC AND IS NOT TO BE REPRODUCED, DISCLOSED OR TRANSMITTED TO ANYONE FOR ANY PURPOSE WITHOUT AUTHORIZATION BY EDEN CRYOGENICS, LLC.

DWN: MAB 11/25/2009
CHKR: JHM 12/28/2009
ENGR: JHM 12/28/2009
APPR:

EDR: 09-0377
DATE: 12/28/2009
SCALE: 1:4

ZONE	REV	DATE	CHANGED BY	EDR	REVISION DESCRIPTION

TITLE: BC-02128 TOP HEAT SHIELD

SIZE: B
DRAWING/PART NUMBER: BC-02128-0010
SHEET: 1 of 1
REV: -

Information Copy

v3.10.15.65/424

Information Copy
v3.10.15 66/424

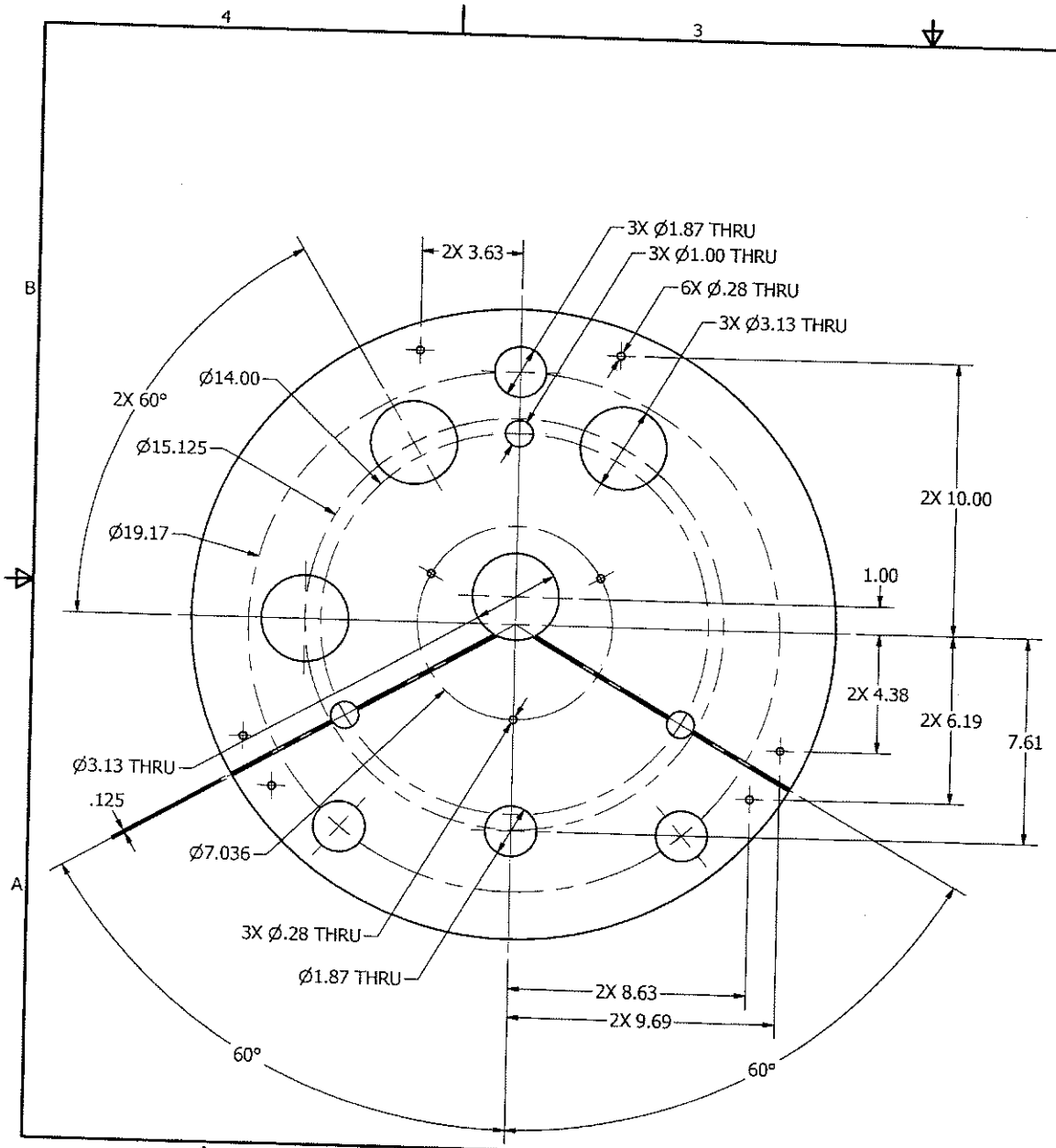

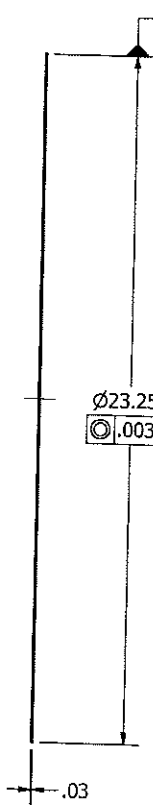

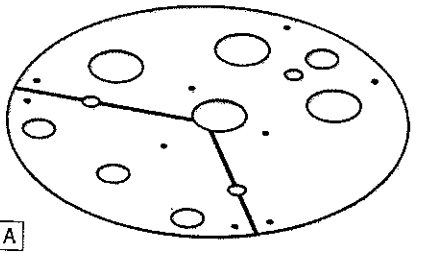

SCALE 1 : 7

NOTE:

1. BREAK ALL SHARP EDGES AND CORNERS TO R.005.
2. VENDOR TO MARK PART NUMBER ON HEAT SHIELD.
3. PUT PROTECTIVE FILM ON EACH SIDE TO PROTECT FINISH.

MATERIAL: PL 23 1/4 Ø X 1/32 THK
Aluminum-6061 ASTM B209
T4 TEMPER

FINISH: #8 MIRROR FINISH

ZONE	REV	DATE	CHANGED BY	EDR	REVISION DESCRIPTION
	-				

TITLE: BC-02128 TOP HEAT SHIELD

NOTES: (UNLESS OTHERWISE SPECIFIED)
1. DIMENSIONS ARE IN INCHES; CONFORMING TO ASME Y14.5-1994. ALL DIMENSIONS APPLY AFTER FINISH.
2. DE-BURR AND BREAK ALL SHARP EDGES AND CORNERS TO R.015 MAX.
3. SURFACE TEXTURE/FINISH 64 AHS

TOLERANCES:
X.X ± .030
X.XX ± .010
X.XXX ± .005
ANGULAR ± 1/2

INFORMATION CONTAINED IN THIS DRAWING IS PROPRIETARY AND THE SOLE PROPERTY OF EDEN CRYOGENICS, LLC. AND IS NOT TO BE REPRODUCED OR DISCLOSED OR TRANSMITTED TO OTHERS FOR ANY PURPOSE NOT AUTHORIZED IN WRITING BY EDEN CRYOGENICS, LLC.

DWN: MAB 11/30/2009
CHKD: JHM 12/28/2009
ENGR: JHM 12/28/2009
APPR:

eden CRYOGENICS
8445 RAUSCH DRIVE
PLAIN CITY, OH 43064
614.873.3949
www.edencryogenics.com

EDR: 09-0377
DATE: 12/28/2009
SCALE: 1:4

SIZE: B
DRAWING/PART NUMBER: BC-02128-0011
SHEET: 1 OF 1
REV: -

Information Copy
v3.10.15 67 / 424

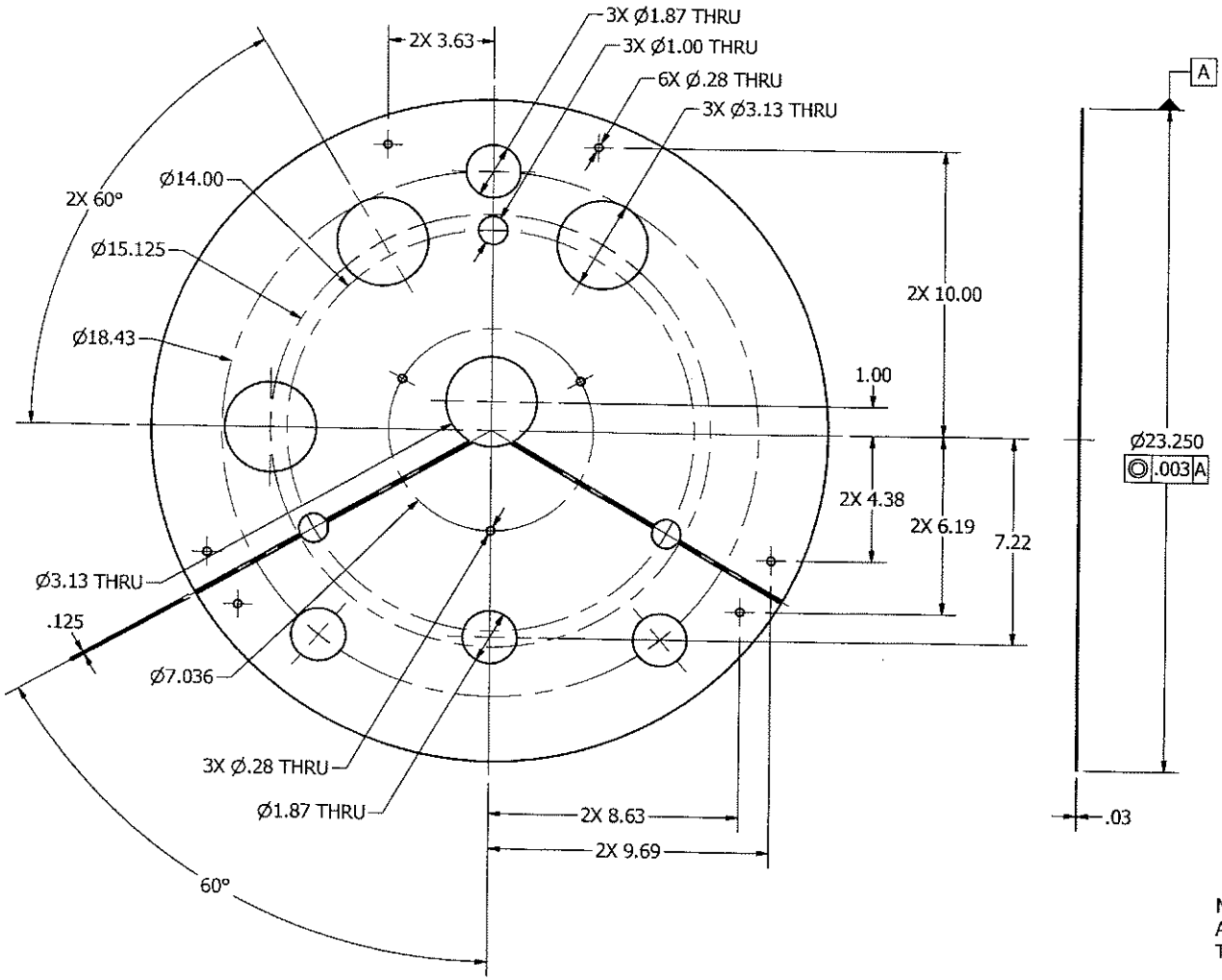

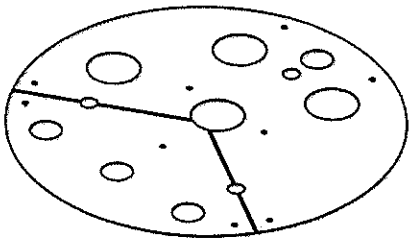

SCALE 1 : 7

NOTE:

1. BREAK ALL SHARP EDGES AND CORNERS TO R.005.
2. VENDOR TO MARK PART NUMBER ON HEAT SHIELD.
3. PUT PROTECTIVE FILM ON EACH SIDE TO PROTECT FINISH.

MATERIAL: PL 23 1/4 Ø X 1/32 THK
Aluminum-6061 ASTM B209
T4 TEMPER

FINISH: #8 MIRROR FINISH

ZONE	REV	DATE	CHANGED BY	EDR	REVISION DESCRIPTION
	-				

TITLE: BC-02128 TOP HEAT SHIELD

INFORMATION SHOWN ON THIS DRAWING IS PROPRIETARY AND TRADE SECRET TO EDEN CRYOGENICS, LLC AND IS NOT TO BE REPRODUCED, DISCLOSED OR TRANSMITTED TO ANYONE FOR ANY PURPOSE NOT AUTHORIZED BY EDEN CRYOGENICS, LLC.

DWN: MAB 11/30/2009
CHKR: JHM 12/28/2009
ENGR: JHM 12/28/2009
APPR:

EDR: 09-0377
DATE: 12/28/2009
SCALE: 1:4

NOTES: (UNLESS OTHERWISE SPECIFIED)
1. DIMENSIONS ARE IN INCHES, CONFORMING TO ASME Y14.5-1994. ALL DIMENSIONS APPLY AFTER FINISH.
2. DE-BURR AND BREAK ALL SHARP EDGES AND CORNERS TO 0.015 MAX.
3. SURFACE TEXTURE/FINISH 64 RMS

TOLERANCES:
X.X ±.030
X.XX ±.010
X.XXX ±.005
ANGULAR ± 1/2°

eden CRYOGENICS
8445 RAUSCH DRIVE
PLAIN CITY, OH 43064
614.873.3949
www.edencryogenics.com

SIZE	DRAWING/PART NUMBER	SHEET	REV
B	BC-02128-0012	1 of 1	-

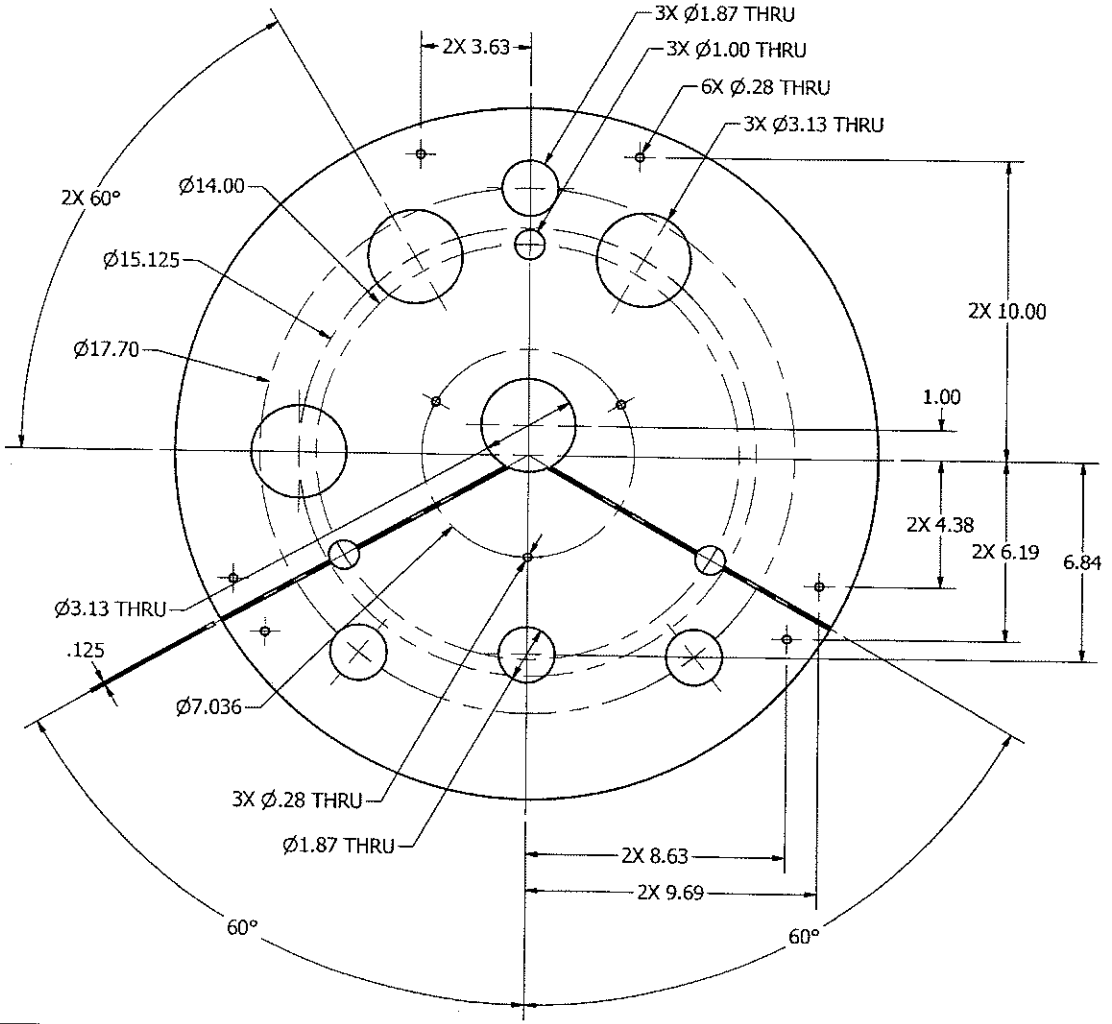

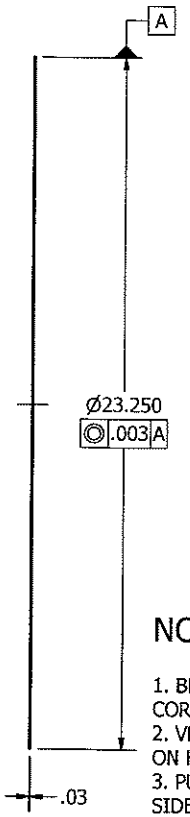

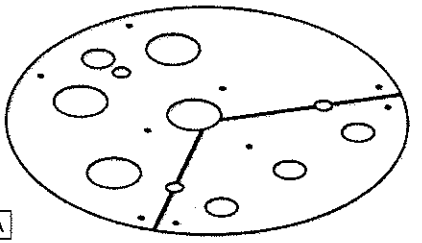

SCALE 1 : 7

NOTE:

1. BREAK ALL SHARP EDGES AND CORNERS TO R.005.
2. VENDOR TO MARK PART NUMBER ON HEAT SHIELD.
3. PUT PROTECTIVE FILM ON EACH SIDE TO PROTECT FINISH.

MATERIAL: PL 23 1/4 Ø X 1/32 THK
Aluminum-6061 ASTM B209
T4 TEMPER

FINISH: #8 MIRROR FINISH

ZONE	REV	DATE	CHANGED BY	EDR	REVISION DESCRIPTION
	-				

TITLE: BC-02128 TOP HEAT SHIELD

NOTES: (UNLESS OTHERWISE SPECIFIED)
1. DIMENSIONS ARE IN INCHES, CONFORMING TO ASME Y14.5-1994. ALL DIMENSIONS APPLY AFTER FINISH.
2. DE-BURR AND BREAK ALL SHARP EDGES AND CORNERS TO R.015 MAX.
3. SURFACE TEXTURE/FINISH 64 RMS

TOLERANCES:
X.X ±.030
X.XX ±.010
X.XXX ±.005
ANGULAR ± 1/2°

INFORMATION SHOWN ON THIS DRAWING IS PROPRIETARY AND THE SOLE PROPERTY OF EDEN CRYOGENICS, LLC. AND IS NOT TO BE REPRODUCED, DISCLOSED OR TRANSMITTED TO OTHERS WITHOUT WRITTEN PERMISSION BY EDEN CRYOGENICS, LLC.

DWN: MAB 11/30/2009
CHKD: JHH 12/28/2009
ENGR: JHH 12/28/2009
APPR:

8445 RAUSCH DRIVE
PLAIN CITY, OH 43064
614.873.3949
www.edencryogenics.com

EDR: 09-0377
DATE: 12/28/2009
SCALE: 1:4

SIZE: B
DRAWING/PART NUMBER: BC-02128-0013
SHEET 1 OF 1
REV -

Information Copy

Information Copy

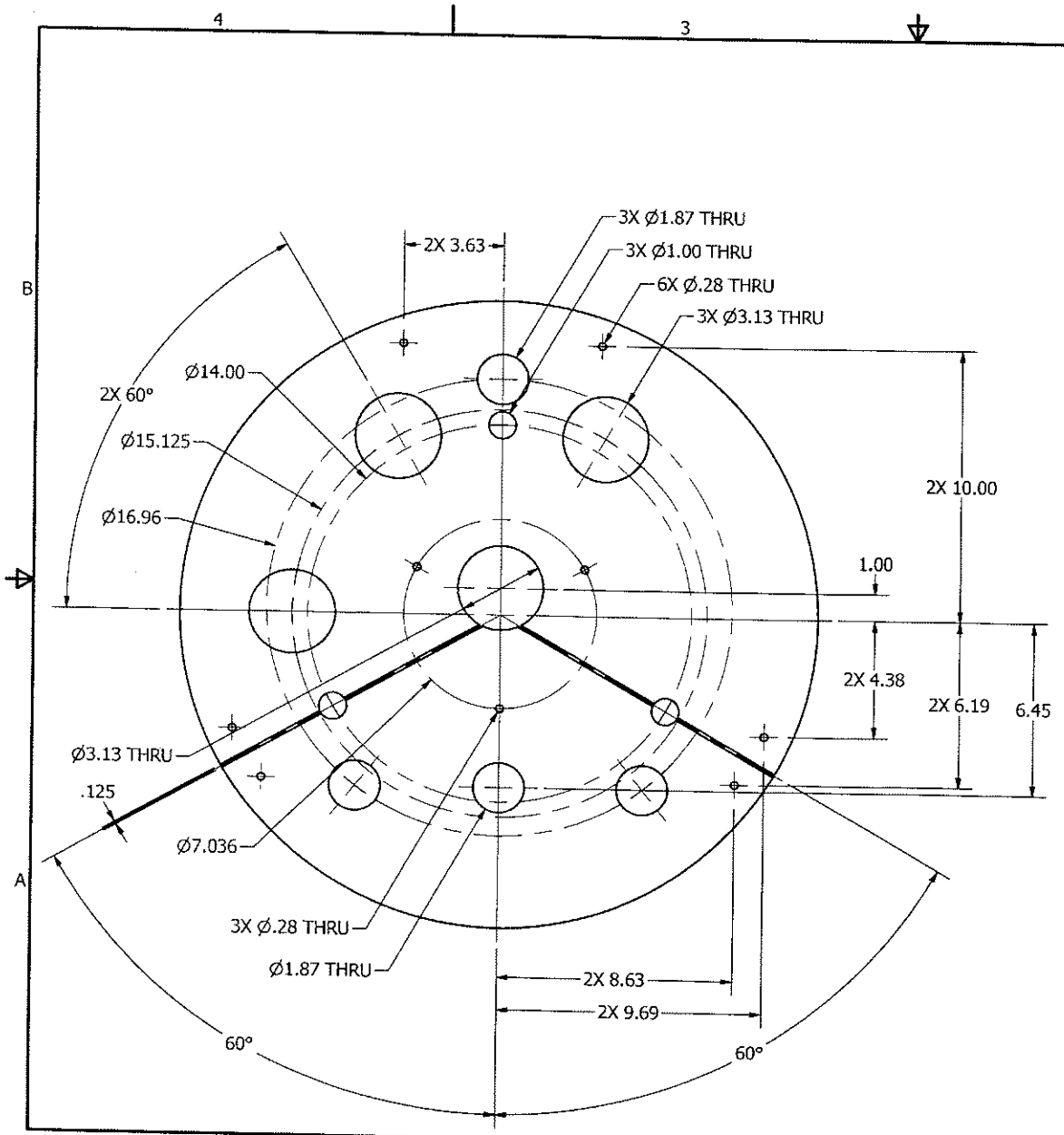

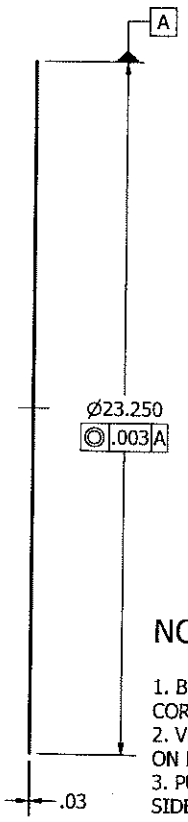

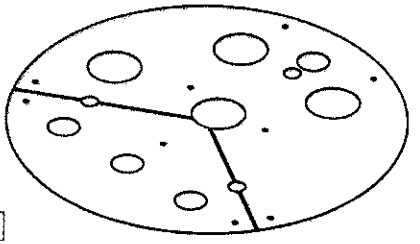

SCALE 1 : 7

NOTE:

1. BREAK ALL SHARP EDGES AND CORNERS TO R.005.
2. VENDOR TO MARK PART NUMBER ON HEAT SHIELD.
3. PUT PROTECTIVE FILM ON EACH SIDE TO PROTECT FINISH.

MATERIAL: PL 23 1/4 Ø X 1/32 THK
Aluminum-6061 ASTM B209
T4 TEMPER

FINISH: #8 MIRROR FINISH

ZONE	REV	DATE	CHANGED BY	EDR	REVISION DESCRIPTION

TITLE: BC-02128 TOP HEAT SHIELD

NOTES: (UNLESS OTHERWISE SPECIFIED)
1. DIMENSIONS ARE IN INCHES, CONFORMING TO ASME Y14.5-1994. ALL DIMENSIONS APPLY AFTER FINISH.
2. DE-BURR AND BREAK ALL SHARP EDGES AND CORNERS TO R.015 MAX.
3. SURFACE TEXTURE/FINISH 64 RMS

TOLERANCES:
X.X ±.030
X.XX ±.010
X.XXX ±.005
ANGULAR ± 1/2°

INFORMATION SHOWN ON THIS DRAWING IS PROPRIETARY AND THE SOLE PROPERTY OF EDEN CRYOGENICS. IT IS NOT TO BE REPRODUCED, DISCLOSED OR TRANSMITTED TO OTHERS FOR ANY PURPOSE WITHOUT WRITTEN APPROVAL BY EDEN CRYOGENICS, LLC.

DWN: MAB 11/30/2009
CHKD: JHM 12/28/2009
ENGR: JHM 12/28/2009
APPR:

eden CRYOGENICS
8445 RAUSCH DRIVE
PLAIN CITY, OH 43064
614.873.3949
www.edencryogenics.com

EDR: 09-0377
DATE: 12/28/2009
SCALE: 1:4

SIZE: B
DRAWING/PART NUMBER: BC-02128-0014
SHEET: 1 OF 1
REV: -

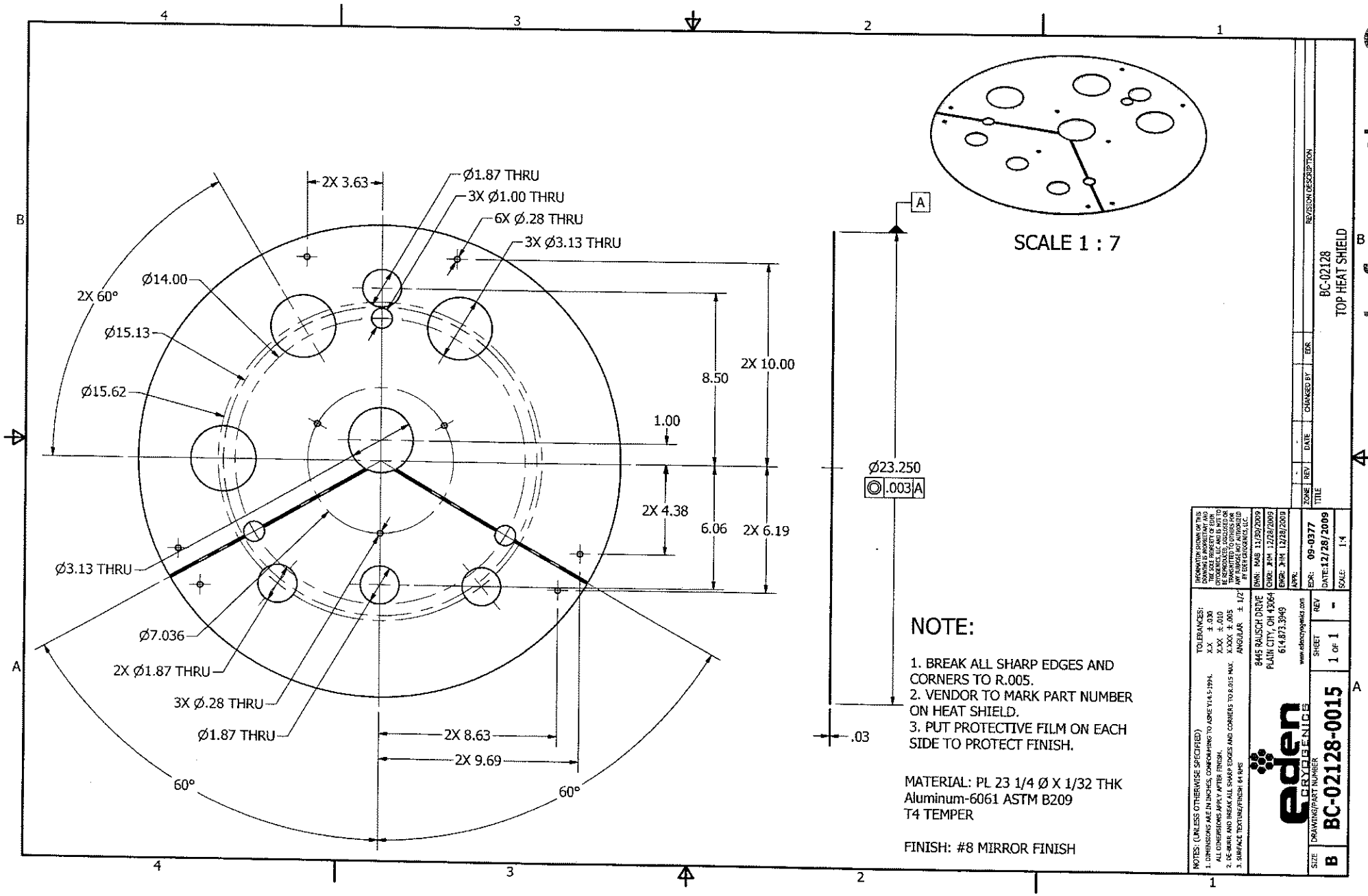
2X 3.63
Ø1.87 THRU
3X Ø1.00 THRU
6X Ø.28 THRU
3X Ø3.13 THRU
2X 60°
Ø14.00
Ø15.13
Ø15.62
2X 10.00
8.50
1.00
2X 4.38
6.06
2X 6.19
Ø3.13 THRU
Ø7.036
2X Ø1.87 THRU
3X Ø.28 THRU
Ø1.87 THRU
2X 8.63
2X 9.69
60°
60°
A
Ø23.250
.003 A
.03
SCALE 1 : 7
NOTE:
1. BREAK ALL SHARP EDGES AND CORNERS TO R.005.
2. VENDOR TO MARK PART NUMBER ON HEAT SHIELD.
3. PUT PROTECTIVE FILM ON EACH SIDE TO PROTECT FINISH.
MATERIAL: PL 23 1/4 Ø X 1/32 THK
Aluminum-6061 ASTM B209
T4 TEMPER
FINISH: #8 MIRROR FINISH
ZONE
REV
DATE
CHANGED BY
EDR
REVISION DESCRIPTION
BC-02128
TOP HEAT SHIELD
TITLE
INFORMATION HEREIN OF THIS DRAWING IS PROPRIETARY AND THE SOLE PROPERTY OF EDEN CRYOGENICS, LLC AND IS NOT TO BE REPRODUCED OR DISCLOSED OR TRANSMITTED TO OTHERS FOR ANY PURPOSE NOT AUTHORIZED BY EDEN CRYOGENICS, LLC.
DWN: RAB 11/30/2009
CHKD: JHM 12/28/2009
ENGR: JHM 12/28/2009
APPR:
EDR: 09-0377
DATE: 12/28/2009
SCALE: 1:4
NOTES: (UNLESS OTHERWISE SPECIFIED)
1. DIMENSIONS ARE IN INCHES, CONFORMING TO ASME Y14.5-1994. ALL DIMENSIONS APPLY AFTER FINISH.
2. DE-BURR AND BREAK ALL SHARP EDGES AND CORNERS TO R.015 MAX.
3. SURFACE TEXTURE/FINISH: 64 RMS
TOLERANCES:
X.X ± .030
X.XX ± .010
X.XXX ± .005
ANGULAR ± 1/2°
eden CRYOGENICS
8445 RAUSCH DRIVE
PLAIN CITY, OH 43064
614.873.3949
www.edencryogenics.com
SIZE
B
DRAWING/PART NUMBER
BC-02128-0015
SHEET
1 of 1
REV
-

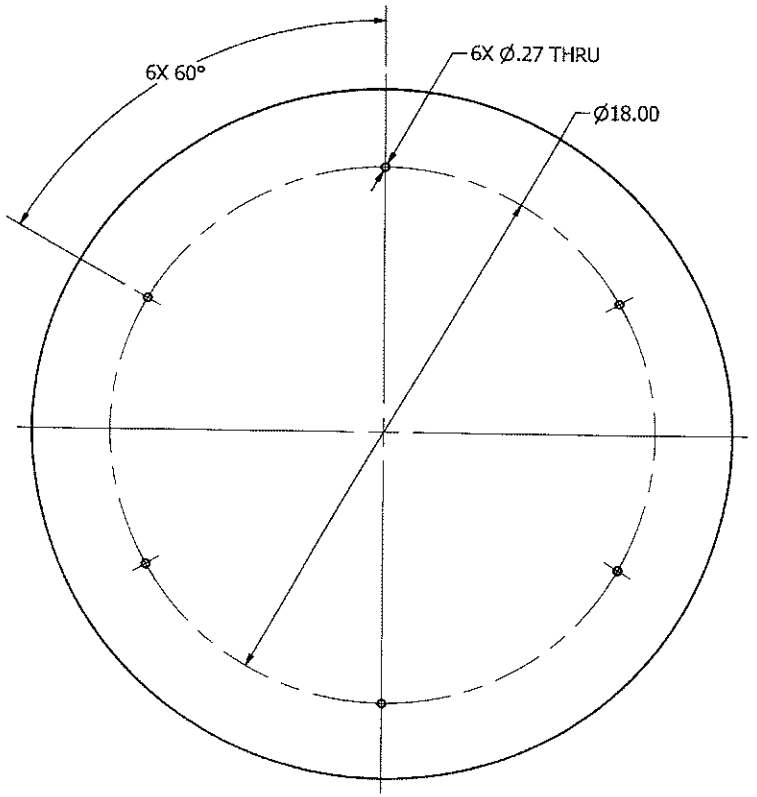

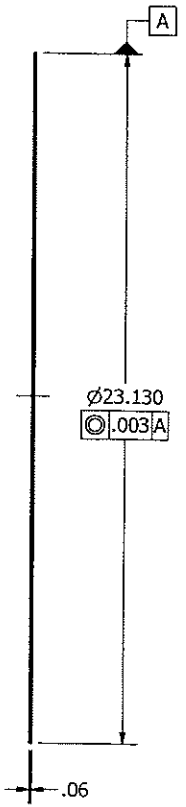

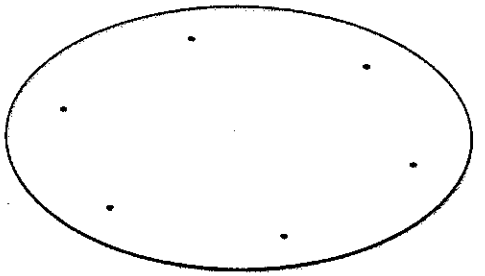

SCALE 1 : 6

NOTE:

1. BREAK ALL SHARP EDGES AND CORNERS TO R.005.
2. VENDER TO MARK PART NUMBER ON HEAT SHIELD.
3. PUT PROTECTIVE FILM ON EACH SIDE TO PROTECT FINISH.

MATERIAL: PL 23 1/8 Ø X 1/16 THK
Aluminum-6061 ASTM B209
T4 TEMPER

FINISH: #8 MIRROR FINISH

NOTES: (UNLESS OTHERWISE SPECIFIED)
1. DIMENSIONS ARE IN INCHES, CONFORMING TO ASME Y14.5-1994. ALL DIMENSIONS APPLY AFTER FINISH.
2. DE-BURR AND BREAK ALL SHARP EDGES AND CORNERS TO R.015 MAX.
3. SURFACE TEXTURE/FINISH 64 RMS

TOLERANCES:
X.X ± .030
X.XX ± .010
X.XXX ± .005
ANGULAR ± 1/2°

INFORMATION SHOWN ON THIS DRAWING IS PROPRIETARY AND CONFIDENTIAL. LEAKS, WHETHER BY REPRODUCED, DISCLOSED OR TRANSMITTED TO OTHERS FOR ANY PURPOSE, IS NOT AUTHORIZED BY EDEN CRYOGENICS, LLC.

DWN: MAB 11/30/2009
CHKR: JHM 12/28/2009
ENGR: JHM 12/28/2009
APPR:

eden CRYOGENICS
8445 RAUSCH DRIVE
PLAIN CITY, OH 43064
614.873.3949
www.edencryogenics.com

EDR: 09-0377
DATE: 12/28/2009
SCALE: 1:4

ZONE	REV	DATE	CHANGED BY	EDR	REVISION DESCRIPTION

TITLE: BC-02128 BOTTOM HEAT SHIELD

SIZE: B
DRAWING/PART NUMBER: BC-02128-0021
SHEET: 1 of 1
REV: -

Information Copy

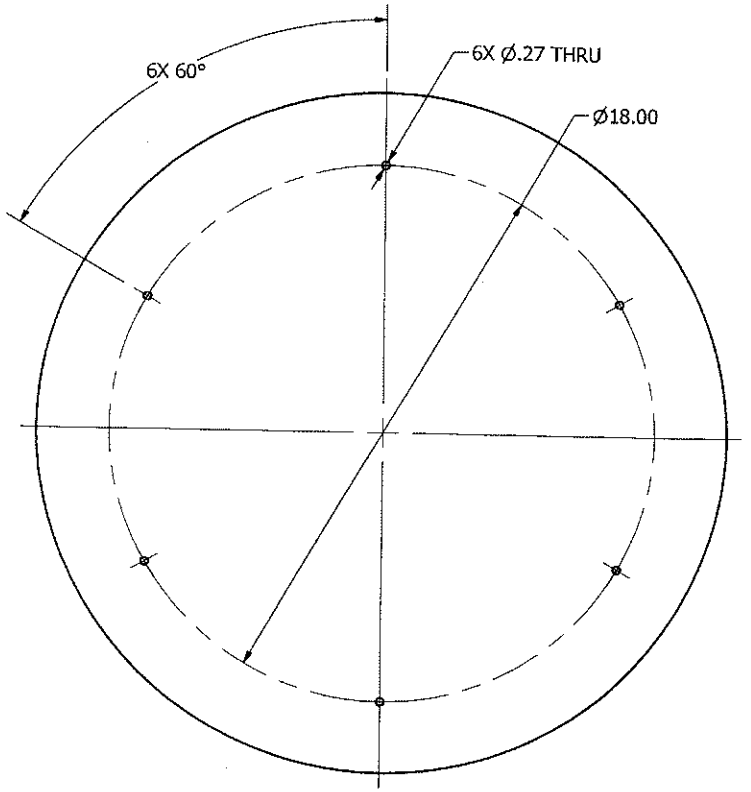

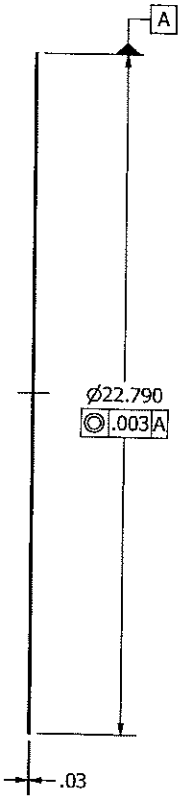

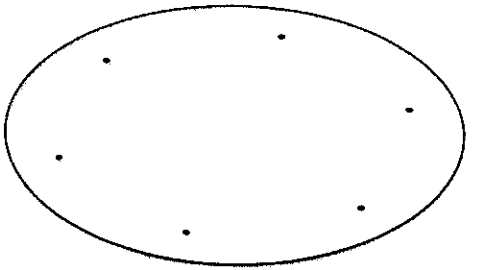

SCALE 1 : 6

NOTE:

1. BREAK ALL SHARP EDGES AND CORNERS TO R.005.
2. VENDER TO MARK PART NUMBER ON HEAT SHIELD.
3. PUT PROTECTIVE FILM ON EACH SIDE TO PROTECT FINISH.

MATERIAL: PL 22 13/16 Ø X 1/32 THK
Aluminum-6061 ASTM B209
T4 TEMPER

FINISH: #8 MIRROR FINISH

ZONE	REV	DATE	CHANGED BY	EER	REVISION DESCRIPTION
	-				

BC-02128
BOTTOM HEAT SHIELD

NOTES: (UNLESS OTHERWISE SPECIFIED)
1. DIMENSIONS ARE IN INCHES, CONFORMING TO ASME Y14.5-1994.
ALL DIMENSIONS APPLY AFTER FINISH.
2. DE-BURR AND BREAK ALL SHARP EDGES AND CORNERS TO R.015 MAX.
3. SURFACE TEXTURE/FINISH 64 RMS

TOLERANCES:
X.X ± .030
X.XX ± .010
X.XXX ± .005
ANGULAR ± 1/2°

INFORMATION HEREIN OF THIS DRAWING IS PROPRIETARY AND THE SOLE PROPERTY OF EDEN CRYOGENICS, LLC AND IS NOT TO BE REPRODUCED, DISCLOSED OR TRANSMITTED TO OTHERS FOR ANY PURPOSE NOT AUTHORIZED IN WRITING BY EDEN CRYOGENICS, LLC.

eden CRYOGENICS
8445 RAUSCH DRIVE
PLAIN CITY, OH 43064
614.873.3949
www.edencryogenics.com

DWN: MAB 11/30/2009
CHKD: JHM 12/28/2009
ENGR: JHM 12/28/2009
APPR:
EER: 09-0377
DATE: 12/28/2009
SCALE: 1:4

SIZE: B
TITLE/PART NUMBER: BC-02128-0022
SHEET: 1 of 1
REV: -

Information Copy
V3.10.15 72 / 424

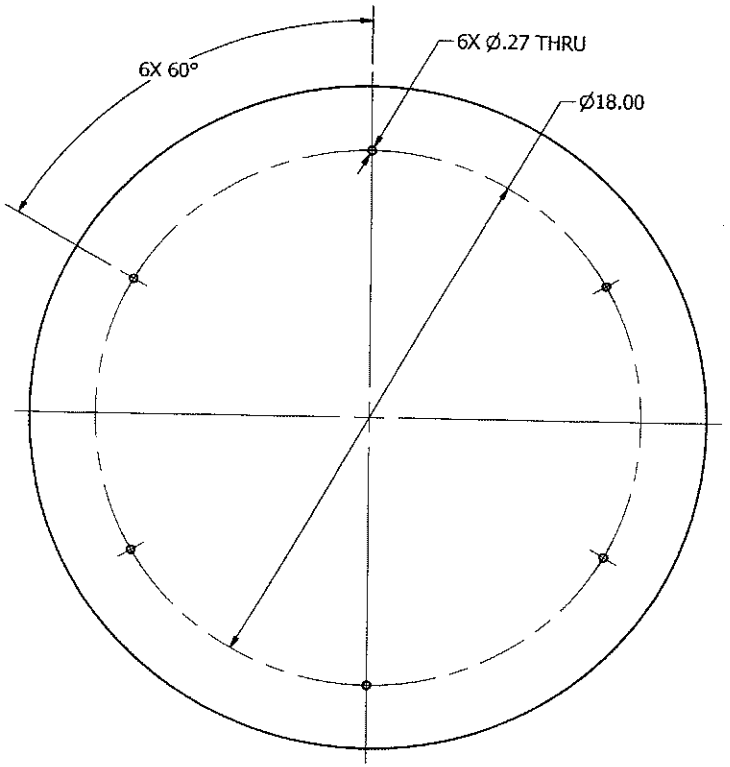

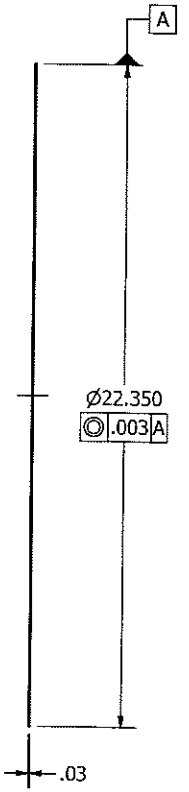

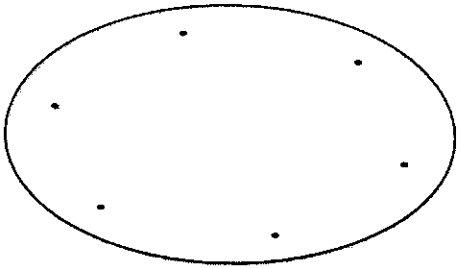

SCALE 1 : 6

NOTE:

1. BREAK ALL SHARP EDGES AND CORNERS TO R.005.
2. VENDER TO MARK PART NUMBER ON HEAT SHIELD.
3. PUT PROTECTIVE FILM ON EACH SIDE TO PROTECT FINISH.

MATERIAL: PL 23 3/8 Ø X 1/32 THK
Aluminum-6061 ASTM B209
T4 TEMPER

FINISH: #8 MIRROR FINISH

ZONE	REV	DATE	CHANGED BY	EDR	REVISION DESCRIPTION
	-				

TITLE: BC-02128 BOTTOM HEAT SHIELD

NOTES: (UNLESS OTHERWISE SPECIFIED)
1. DIMENSIONS ARE IN INCHES, CONFORMING TO ASME Y14.5-1994. ALL DIMENSIONS APPLY AFTER FINISH.
2. DE-BURR AND BREAK ALL SHARP EDGES AND CORNERS TO R.015 MAX.
3. SURFACE TEXTURE/FINISH 64 RMS

TOLERANCES:
X.X ±.030
X.XX ±.010
X.XXX ±.005
ANGULAR ± 1/2°

INFORMATION SHOWN ON THIS DRAWING IS PROPRIETARY AND THE SOLE PROPERTY OF EDEN CRYOGENICS, LLC AND IS NOT TO BE REPRODUCED OR DISCLOSED OR TRANSMITTED TO OTHERS FOR ANY PURPOSE NOT AUTHORIZED IN WRITING BY EDEN CRYOGENICS, LLC.

eden CRYOGENICS
8445 RAUSCH DRIVE
PLAIN CITY, OH 43064
614.873.3949
www.edencryogenics.com

DWN: MAB 11/30/2009
CHKR: JHM 12/28/2009
ENGR: JHM 12/28/2009
APPR:

FIN#: 09-0377
DATE: 12/28/2009
SCALE: 1:4

SIZE: B
DRAWING/PART NUMBER: BC-02128-0023
SHEET: 1 of 1
REV: -

Information Copy
V3.10.15 73/424

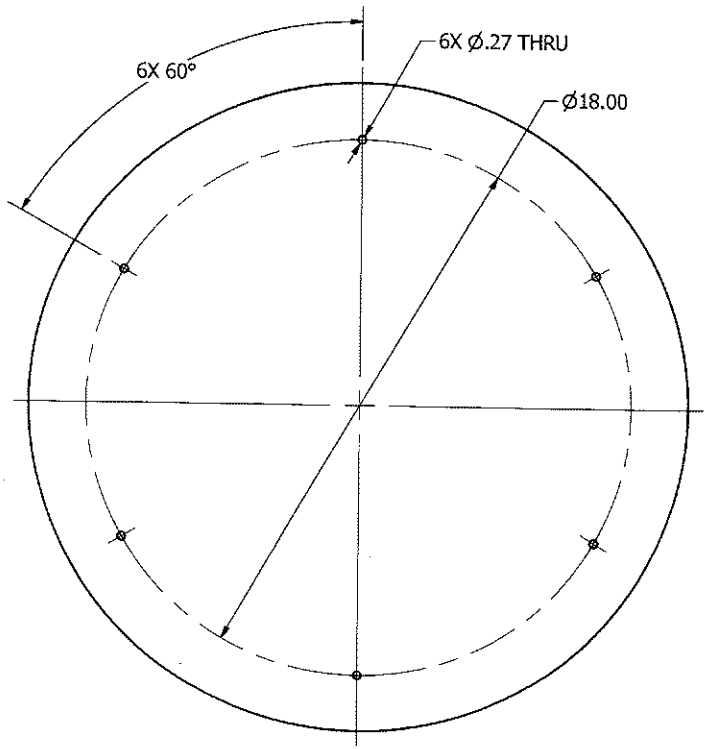

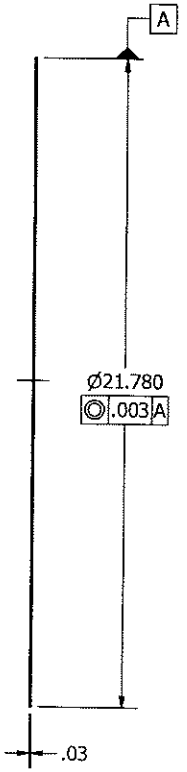

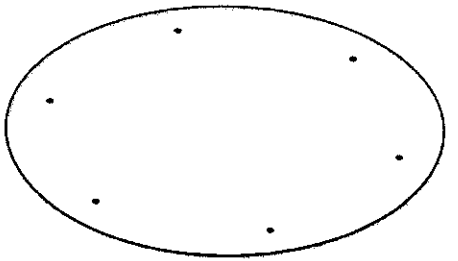

SCALE 1 : 6

NOTE:

1. BREAK ALL SHARP EDGES AND CORNERS TO R.005.
2. VENDER TO MARK PART NUMBER ON HEAT SHIELD.
3. PUT PROTECTIVE FILM ON EACH SIDE TO PROTECT FINISH.

MATERIAL: PL 21 13/16 Ø X 1/32 THK
Aluminum-6061 ASTM B209
T4 TEMPER

FINISH: #8 MIRROR FINISH

NOTES: (UNLESS OTHERWISE SPECIFIED)
1. DIMENSIONS ARE IN INCHES, CONFORMING TO ASME Y14.5-1994. ALL DIMENSIONS APPLY AFTER FINISH.
2. DE-BURR AND BREAK ALL SHARP EDGES AND CORNERS TO R.015 MAX.
3. SURFACE TEXTURE/FINISH 64 RMS

TOLERANCES:
X.X ± .030
X.XX ± .010
X.XXX ± .005
ANGULAR ± 1/2°

THE INFORMATION SHOWN ON THIS DRAWING IS PROPRIETARY AND THE SOLE PROPERTY OF EDEN CRYOGENICS, LLC AND IS NOT TO BE REPRODUCED, DISCLOSED OR TRANSMITTED TO OTHERS FOR ANY PURPOSE WITHOUT AUTHORIZATION FROM EDEN CRYOGENICS, LLC.

eden CRYOGENICS
8445 RAUSCH DRIVE
PLAIN CITY, OH 43064
614.873.3949
www.edencryogenics.com

DWN: MAB 11/30/2009
CHKD: JHM 12/28/2009
ENGR: JHM 12/28/2009
APPR:
EDPI: 09-0377
DATE: 12/28/2009
SCALE: 1:4

SHEET 1 OF 1
HLV -

SIZE B
DRAWING/PART NUMBER BC-02128-0024

ZONE	REV	DATE	CHANGED BY	ECN	REVISION DESCRIPTION
	-				

TITLE
BC-02128
BOTTOM HEAT SHIELD

Information Copy

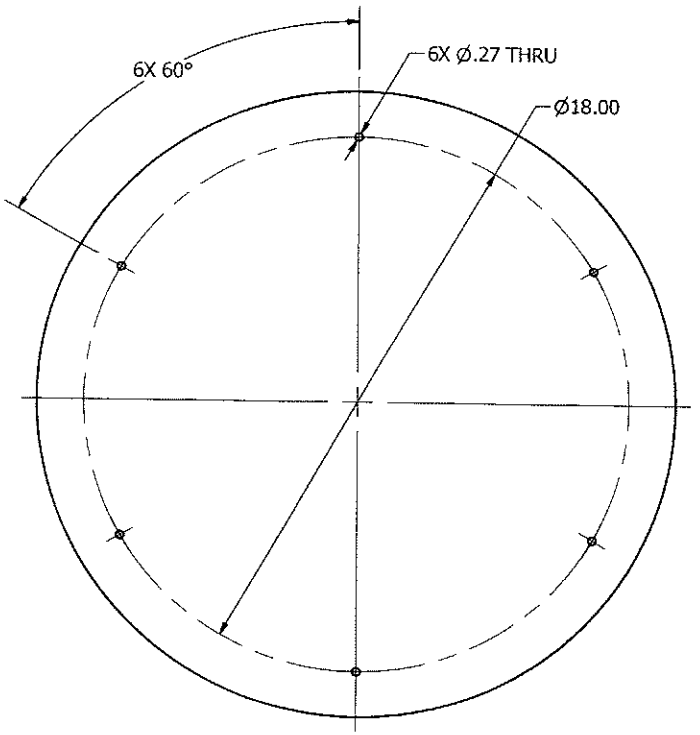

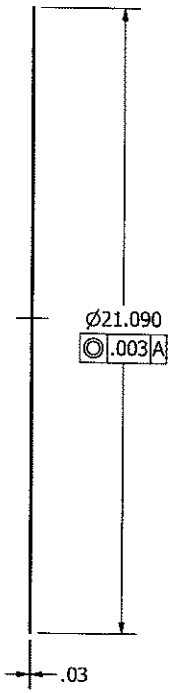

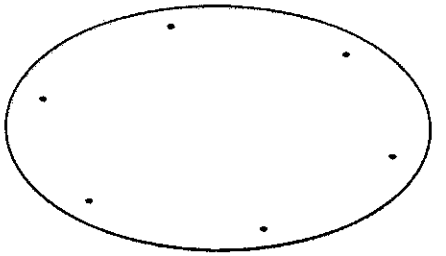

SCALE 1 : 6

NOTE:

1. BREAK ALL SHARP EDGES AND CORNERS TO R.005.
2. VENDER TO MARK PART NUMBER ON HEAT SHIELD.
3. PUT PROTECTIVE FILM ON EACH SIDE TO PROTECT FINISH.

MATERIAL: PL 21 1/8 Ø X 1/32 THK
Aluminum-6061 ASTM B209
T4 TEMPER

FINISH: #8 MIRROR FINISH

NOTES: (UNLESS OTHERWISE SPECIFIED)
1. DIMENSIONS ARE IN INCHES, CONFORMING TO ASME Y14.5-1994. ALL DIMENSIONS APPLY AFTER FINISH.
2. DE-BURR AND BREAK ALL SHARP EDGES AND CORNERS TO R.015 MAX.
3. SURFACE TEXTURE/FINISH 64 RMS

TOLERANCES:
X.X ±.030
X.XX ±.010
X.XXX ±.005
ANGULAR ± 1/2°

INFORMATION SHOWN ON THIS DRAWING IS PROPRIETARY AND THE SOLE PROPERTY OF EDEN CRYOGENICS, LLC AND IS NOT TO BE REPRODUCED OR TRANSMITTED TO OTHERS FOR ANY PURPOSE NOT AUTHORIZED BY EDEN CRYOGENICS, LLC.

eden CRYOGENICS
8445 RAUSCH DRIVE
PLAIN CITY, OH 43064
614.873.3949
www.edencryogenics.com

DWN: MAB 11/30/2009
CHKD: JHM 12/28/2009
ENGR: JHM 12/28/2009
APPR:

EDR: 09-0377
DATE: 12/28/2009
SCALE: 1:4

ZONE	REV	DATE	CHANGED BY	EDR	REVISION DESCRIPTION
-	-				

TITLE: BC-02128 BOTTOM HEAT SHIELD

SIZE: B
DRAWING/PART NUMBER: BC-02128-0025
SHEET: 1 OF 1
REV: -

Information Copy
V3.10.15.75 / 424

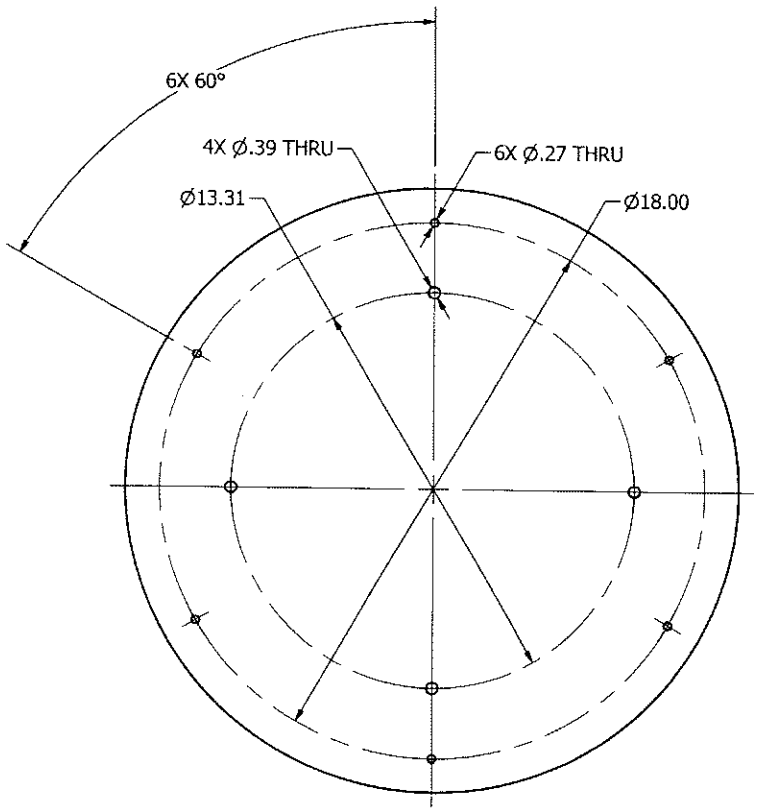

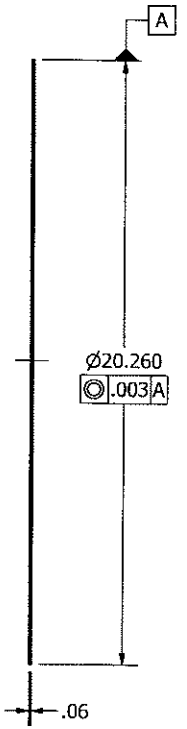

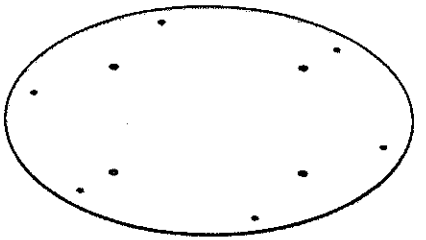

SCALE 1 : 6

NOTE:

1. BREAK ALL SHARP EDGES AND CORNERS TO R.005.
2. VENDER TO MARK PART NUMBER ON HEAT SHIELD.
3. PUT PROTECTIVE FILM ON EACH SIDE TO PROTECT FINISH.

MATERIAL: PL 20 9/32 Ø X 1/16 THK
Aluminum-6061 ASTM B209
T4 TEMPER

FINISH: #8 MIRROR FINISH

NOTES: (UNLESS OTHERWISE SPECIFIED)
1. DIMENSIONS ARE IN INCHES, CONFORMING TO ASME Y14.5-1994. ALL DIMENSIONS APPLY AFTER FINISH.
2. DE-BURR AND BREAK ALL SHARP EDGES AND CORNERS TO R.015 MAX.
3. SURFACE TEXTURE/FINISH 64 RMS

TOLERANCES:
X.X ± .030
X.XX ± .010
X.XXX ± .005
ANGULAR ± 1/2°

INFORMATION SHOWN ON THIS DRAWING IS PROPRIETARY AND THE SOLE PROPERTY OF EDEN CRYOGENICS, LLC AND IS NOT TO BE REPRODUCED, DISCLOSED OR TRANSMITTED TO OTHERS FOR ANY PURPOSE WITHOUT AUTHORIZATION BY EDEN CRYOGENICS, LLC.

DWN: MAB 11/30/2009
CHKD: JHM 12/28/2009
ENGR: JHM 12/28/2009
APPR:

eden CRYOGENICS
8445 RAUSCH DRIVE
PLAIN CITY, OH 43064
614.873.3949
www.edencryogenics.com

EDR: 09-0377
DATE: 12/28/2009
SCALE: 1:4

ZONE	REV	DATE	CHANGED BY	EDR	REVISION DESCRIPTION
-	-	-	-	-	-

TITLE: BC-02128 BOTTOM HEAT SHIELD

SIZE	DRAWING/PART NUMBER	SHEET	REV
B	BC-02128-0026	1 of 1	-

Information Copy

Information Copy
v3.10.15 77 / 424

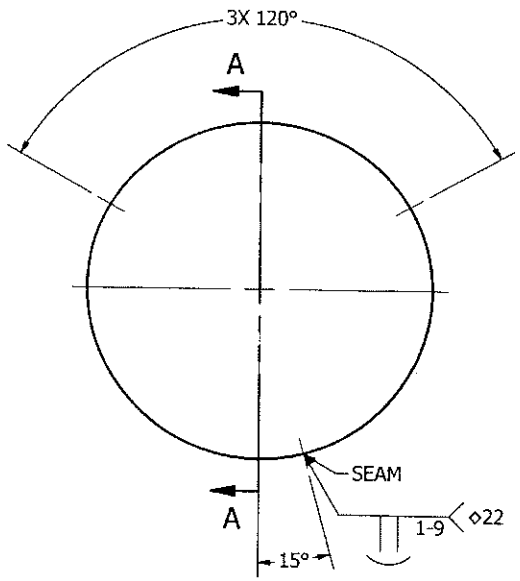

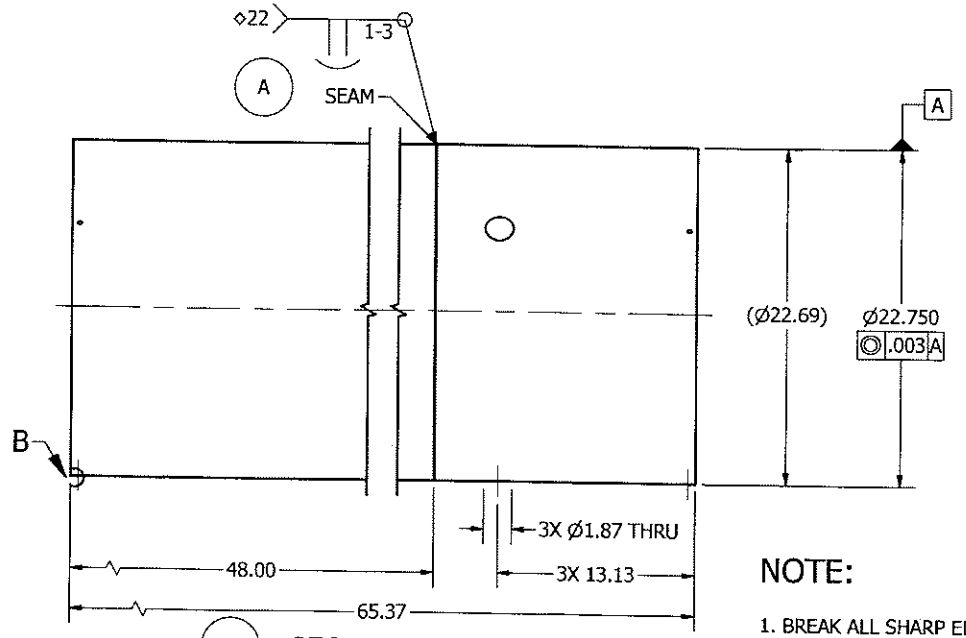

SECTION A-A
SCALE 1 : 8

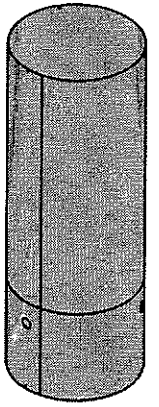

SCALE 1 : 20

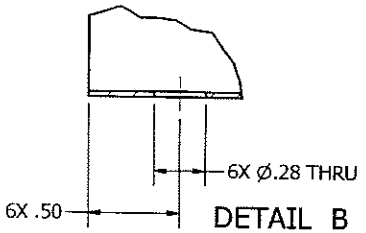

DETAIL B
SCALE 3 : 2

NOTE:

1. BREAK ALL SHARP EDGES AND CORNERS TO R.005.
2. PUT PROTECTIVE FILM ON EACH SIDE TO PROTECT FINISH.
3. "◇22" WELD PER EDEN SPEC BC101-001-022, LATEST REV.

MATERIAL:PL 22 3/4 Ø X 65 1/4 X 1/32 THK
Aluminum-6061 ASTM B209
T4 TEMPER

FINISH: #8 MIRROR FINISH

ZONE	REV	DATE	CHANGED BY	REVISION DESCRIPTION
B3	A	2/24/2010	HAB	10-0056 2. ADDED WELD CALLOUT
A3	A	2/24/2010	HAB	10-0056 1. ADDED 48.00 DIM FOR WELD SEAM

TITLE: BC-02128 SIDE HEAT SHIELD

DESCRIPTION SHOWN ON THIS DRAWING IS PROPRIETARY AND CONFIDENTIAL PROPERTY OF EDEN CRYOGENICS, LLC. IT MAY NOT BE REPRODUCED, DISCLOSED OR TRANSMITTED TO OTHERS NOR MAY ANY USE BE MADE OF IT BY EDEN CRYOGENICS, LLC.

DWN: HAB 11/12/2009
CHKD: JHM 12/28/2009
ENGR: JHM 12/28/2009
APPR:
FTR#: 09-0377
DATE: 12/28/2009
SCALE: 1:8

NOTES: (UNLESS OTHERWISE SPECIFIED)
1. DIMENSIONS ARE IN INCHES, CONFORMING TO ASME Y14.5-1994. ALL DIMENSIONS APPLY AFTER FINISH.
2. DE-BURR AND BREAK ALL SHARP EDGES AND CORNERS TO R.015 MAX.
3. SURFACE TEXTURE/FINISH 64 RMS

TOLERANCES:
X.X ± .030
X.XX ± .010
X.XXX ± .005
ANGULAR ± 1/2°

eden CRYOGENICS
8445 RAUSCH DRIVE
PLAIN CITY, OH 43064
614.873.3949
www.edencryogenics.com

SIZE: B
DWG/PART NUMBER: BC-02128-0031
SHEET: 1 of 1
REV: A

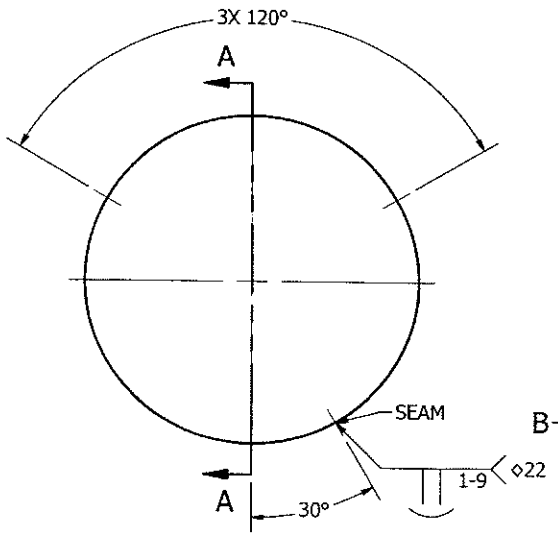

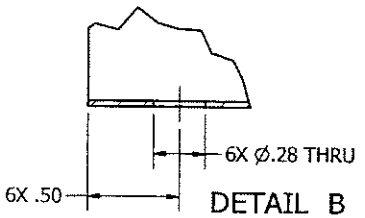

DETAIL B
SCALE 3 : 2

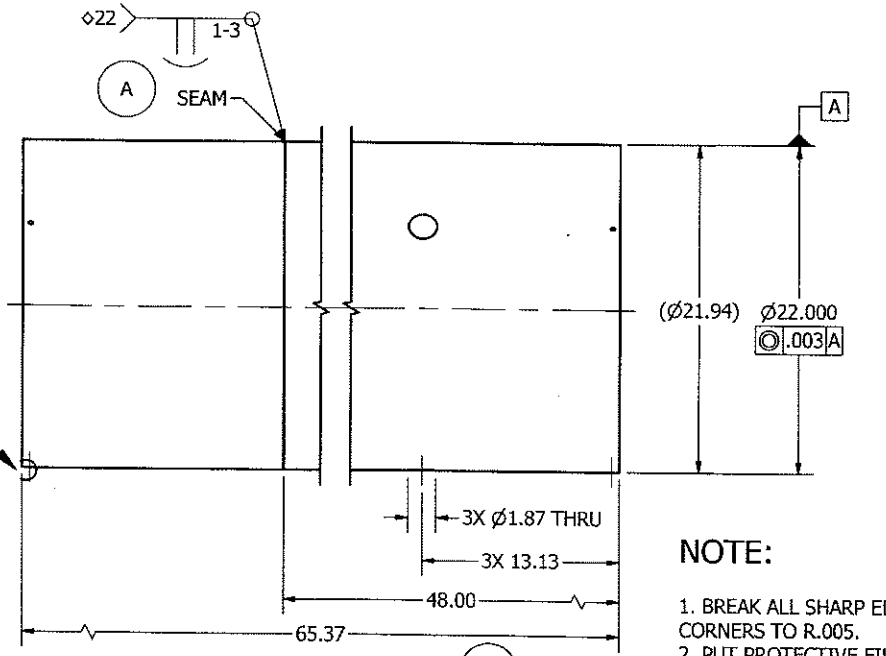

SECTION A-A
SCALE 1 : 8

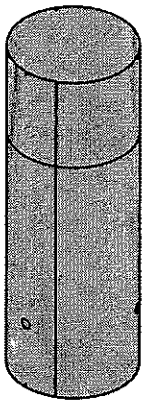

SCALE 1 : 20

NOTE:

1. BREAK ALL SHARP EDGES AND CORNERS TO R.005.
2. PUT PROTECTIVE FILM ON EACH SIDE TO PROTECT FINISH.
3. "◇22" WELD PER EDEN SPEC BC101-001-022, LATEST REV.

MATERIAL: PL 22 Ø X 65 1/4 X 1/32 THK
Aluminum-6061 ASTM B209
T4 TEMPER

FINISH: #8 MIRROR FINISH

ZONE	REV	DATE	CHANGED BY	CHK	REVISION
B2	A	2/24/2010	MAB	TG-0655	2. ADDED WELD CALLOUT
A1	A	4/14/2010	MAB	TG-0655	1. ADDED WELDS FOR WELD SEAM

BC-02128
SIDE HEAT SHIELD

NOTES: (UNLESS OTHERWISE SPECIFIED)
1. DIMENSIONS ARE IN INCHES, CONFORMING TO ASME Y14.5-1994.
ALL DIMENSIONS APPLY AFTER FINISH.
2. DE-BURR AND BREAK ALL SHARP EDGES AND CORNERS TO R.015 MAX.
3. SURFACE TEXTURE/FINISH 64 RMS

TOLERANCES:
X.X ± .030
X.XX ± .010
X.XXX ± .005
ANGULAR ± 1/2°

INFORMATION SHOWN ON THIS DRAWING IS PROPRIETARY AND THE SOLE PROPERTY OF EDEN CRYOGENICS, LLC. NO PART OF THIS DOCUMENT MAY BE REPRODUCED, DISCLOSED OR TRANSMITTED TO OTHERS FOR ANY PURPOSE WITHOUT WRITTEN APPROVAL BY EDEN CRYOGENICS, LLC.

eden CRYOGENICS
8445 RAUSCH DRIVE
PLAIN CITY, OH 43064
614.873.3949
www.edencryogenics.com

DWN: MAB 11/12/2009
CHKR: JHM 12/28/2009
ENGR: JHM 12/28/2009
APPR:
EDR: 09-0377
DATE: 12/28/2009
SCALE: 1:8

TITLE

SIZE B | DRAWING/PART NUMBER BC-02128-0032 | SHEET 1 of 1 | REV A

Information Copy

Information Copy
v3.10.15 79 / 424

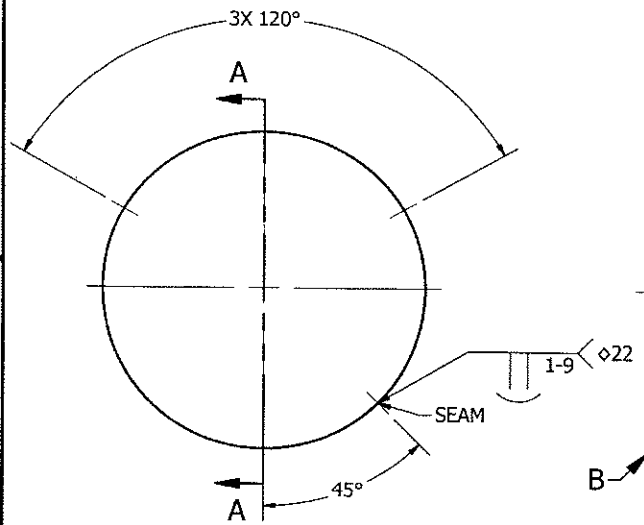

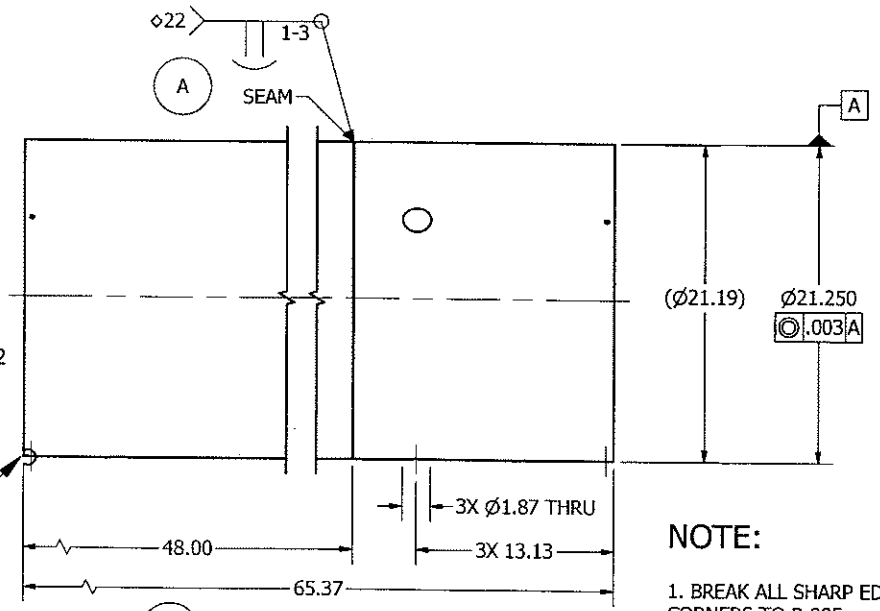

SECTION A-A
SCALE 1 : 8

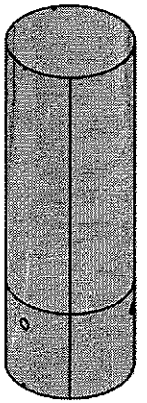

SCALE 1 : 20

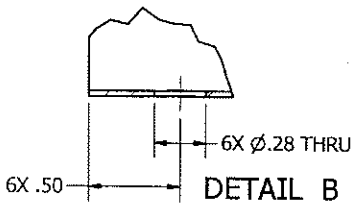

DETAIL B
SCALE 3 : 2

NOTE:

1. BREAK ALL SHARP EDGES AND CORNERS TO R.005.
2. PUT PROTECTIVE FILM ON EACH SIDE TO PROTECT FINISH.
3. "◇22" WELD PER EDEN SPEC BC101-001-022, LATEST REV.

MATERIAL: PL 21 1/4 Ø X 65 1/4 X 1/32 THK
Aluminum-6061 ASTM B209
T4 TEMPER

FINISH: #8 MIRROR FINISH

ZONE	REV	DATE	CHANGED BY	REVISION DESCRIPTION
B3	A	3/24/2010	RAB	2. ADDED WELD CALLOUT.
A3	A	3/24/2010	RAB	1. ADDED 48.00 DIM FOR WELD SEAM.

TITLE: BC-02128 SIDE HEAT SHIELD

INFORMATION SHOWN ON THIS DRAWING IS PROPRIETARY AND THE SOLE PROPERTY OF EDEN CRYOGENICS, LLC. THIS DATA IS NOT TO BE DISCLOSED, REPRODUCED OR TRANSMITTED TO OTHERS FOR ANY PURPOSE NOT NOTED BELOW WITHOUT WRITTEN CONSENT OF EDEN CRYOGENICS, LLC.

DWN: RAB 11/12/2009
CHK: JHM 12/28/2009
ENGR: JHM 12/28/2009
APPR:
EDR: 09-0377
DATE: 12/28/2009
SCALE: 1:8

TOLERANCES:
X.X ± .030
X.XX ± .010
X.XXX ± .005
ANGULAR ± 1/2°

NOTES: (UNLESS OTHERWISE SPECIFIED)
1. DIMENSIONS ARE IN INCHES, CONFORMING TO ASME Y14.5-1994. ALL DIMENSIONS APPLY AFTER FINISH.
2. DE-BURR AND BREAK ALL SHARP EDGES AND CORNERS TO R.015 MAX.
3. SURFACE TEXTURE/FINISH 64 RMS

eden CRYOGENICS
8445 RAUSCH DRIVE
PLAIN CITY, OH 43064
614.873.3949
www.edencryogenics.com

SIZE: B
DRAWING/PART NUMBER: BC-02128-0033
SHEET: 1 OF 1
REV: A

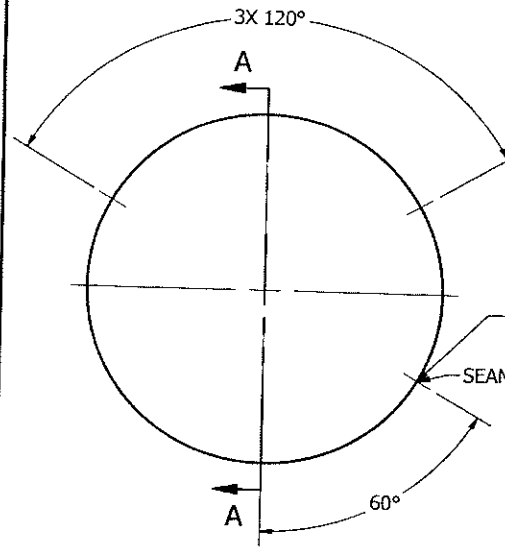

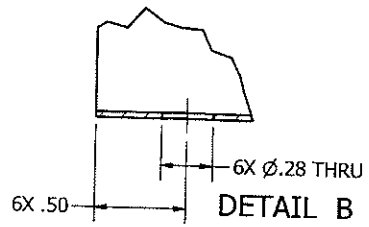

DETAIL B
SCALE 3 : 2

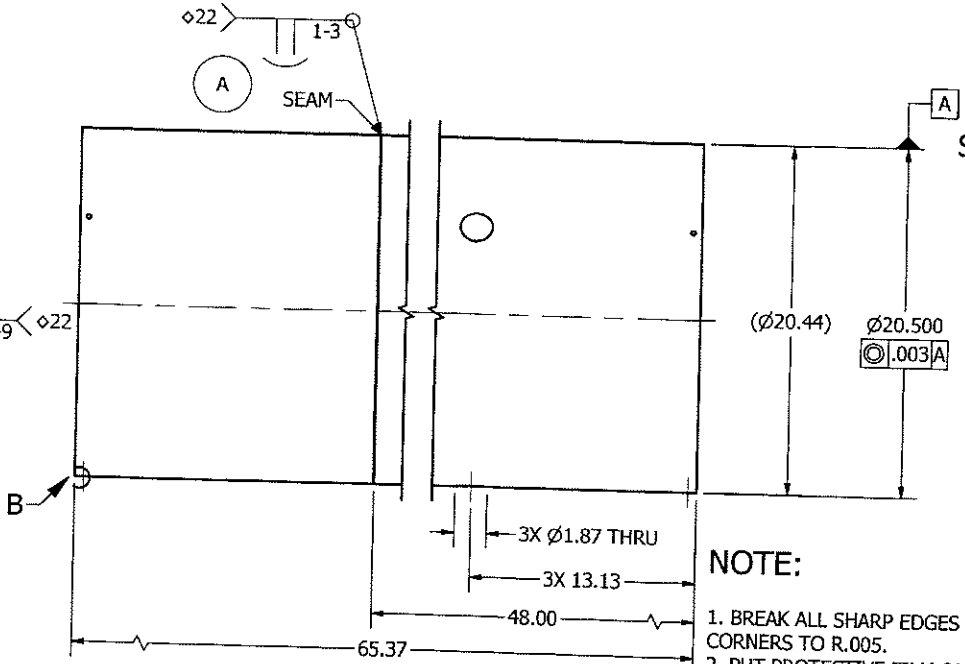

SECTION A-A
SCALE 1 : 7

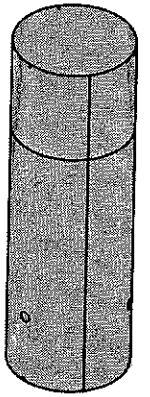

SCALE 1 : 20

NOTE:

1. BREAK ALL SHARP EDGES AND CORNERS TO R.005.
2. PUT PROTECTIVE FILM ON EACH SIDE TO PROTECT FINISH.
3. "◇22" WELD PER EDEN SPEC BC101-001-022, LATEST REV.

MATERIAL: PL 20 1/2 Ø X 65 1/4 X 1/32 THK
Aluminum-6061 ASTM B209
T4 TEMPER

FINISH: #8 MIRROR FINISH

ZONE	REV	DATE	CHANGED BY	REVISION DESCRIPTION
B3	A	2/24/2010	MAB	10-0055 2. ADDED WELD CALLOUT.
B2	A	2/24/2010	MAB	10-0055 1. ADDED 48.00 DIM FOR WELD SEAM.

TITLE: BC-02128 SIDE HEAT SHIELD

INFORMATION SHOWN ON THIS DRAWING IS PROPRIETARY AND THE PROPERTY OF EDEN CRYOGENICS, LLC AND IS NOT TO BE REPRODUCED, DISCLOSED OR TRANSMITTED TO OTHERS FOR ANY PURPOSE WITHOUT AUTHORIZATION BY EDEN CRYOGENICS, LLC.

DWN: MAB 11/12/2009
CHKD: JHM 12/28/2009
ENGR: JHM 12/28/2009
APPR:

EDR: 09-0377
DATE: 12/28/2009
SCALE: 1:7

NOTES: (UNLESS OTHERWISE SPECIFIED)
1. DIMENSIONS ARE IN INCHES, CONFORMING TO ASME Y14.5-1994. ALL DIMENSIONS APPLY AFTER FINISH.
2. DE-BURR AND BREAK ALL SHARP EDGES AND CORNERS TO R.015 MAX.
3. SURFACE TEXTURE/FINISH 64 RMS

TOLERANCES:
X.X ± .030
X.XX ± .010
X.XXX ± .005
ANGULAR ± 1/2°

eden CRYOGENICS
8445 RAUSCH DRIVE
PLAIN CITY, OH 43064
614.873.3949
www.edencryogenics.com

SIZE: B
DRAWING/PART NUMBER: BC-02128-0034
SHEET: 1 OF 1
REV: A

Information Copy
V3.10.15 80/424

Information Copy
v3.10.15 81 / 424

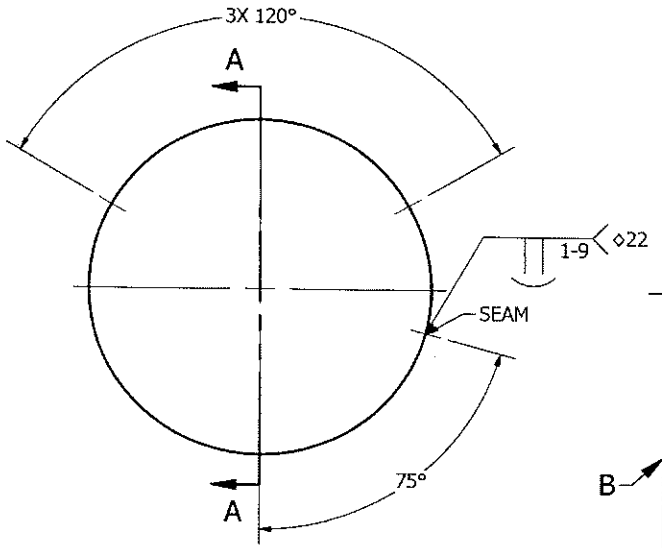

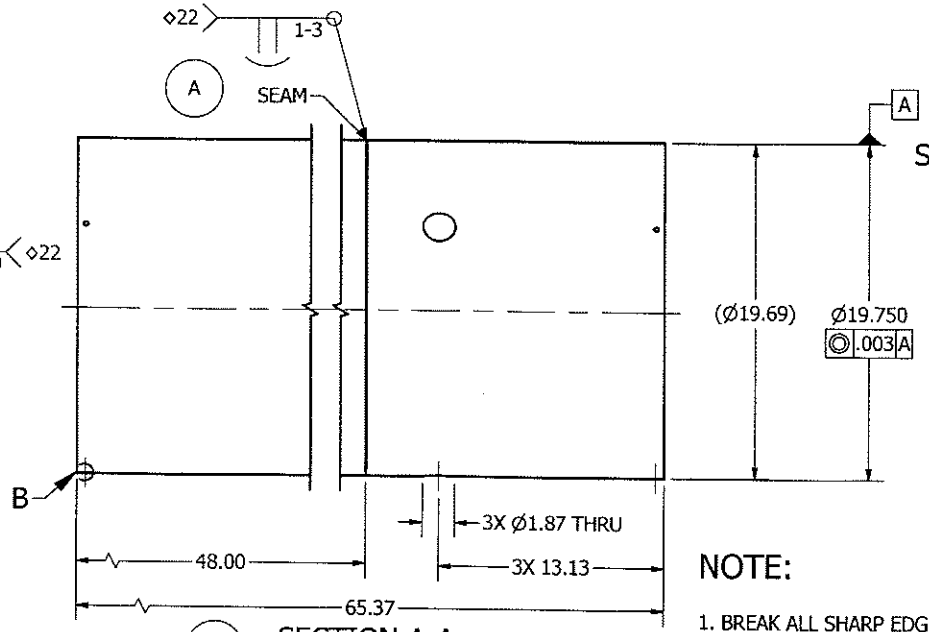

SECTION A-A
SCALE 1 : 7

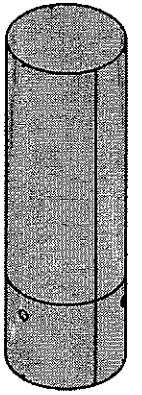

SCALE 1 : 20

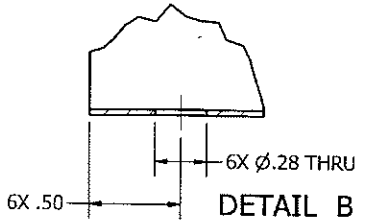

DETAIL B
SCALE 3 : 2

NOTE:

1. BREAK ALL SHARP EDGES AND CORNERS TO R.005.
2. PUT PROTECTIVE FILM ON EACH SIDE TO PROTECT FINISH.
3. "◇22" WELD PER EDEN SPEC BC101-001-022, LATEST REV.

MATERIAL: PL 19 3/4 Ø X 65 1/4 X 1/32 THK
Aluminum-6061 ASTM B209
T4 TEMPER

FINISH: #8 MIRROR FINISH

ZONE	REV	DATE	CHANGED BY	EDR	REVISION DESCRIPTION
B3	A	3/24/2010	MAB	10-0055	2. ADDED WELD PER EDEN SPEC
A3	A	2/24/2010	MAB	10-0055	1. ADDED 48.00 DIM FOR WELD SEAM.

TITLE: BC-02128 SIDE HEAT SHIELD

NOTES: (UNLESS OTHERWISE SPECIFIED)
1. DIMENSIONS ARE IN INCHES, CONFORMING TO ASME Y14.5-1994. ALL DIMENSIONS APPLY AFTER FINISH.
2. DE-BURR AND BREAK ALL SHARP EDGES AND CORNERS TO R.015 MAX.
3. SURFACE TEXTURE/FINISH 64 RMS

TOLERANCES:
X.X ± .030
X.XX ± .010
X.XXX ± .005
ANGULAR ± 1/2°

INFORMATION SHOWN ON THIS DRAWING IS PROPRIETARY AND THE SOLE PROPERTY OF EDEN CRYOGENICS, LLC AND IS NOT TO BE REPRODUCED, DISCLOSED OR TRANSMITTED TO OTHERS FOR ANY PURPOSE WITHOUT WRITTEN PERMISSION OF EDEN CRYOGENICS, LLC

eden CRYOGENICS
8445 RAUSCH DRIVE
PLAIN CITY, OH 43064
614.873.3949
www.edencryogenics.com

DWN: MAB 11/12/2009
CHKR: JHM 12/28/2009
APPR:
EDR: 09-0377
DATE: 12/28/2009
SCALE: 1:7

SIZE: B
DRAWING/PART NUMBER: BC-02128-0035
SHEET: 1 of 1
REV: A

Information Copy
v3.10.15 82 / 424

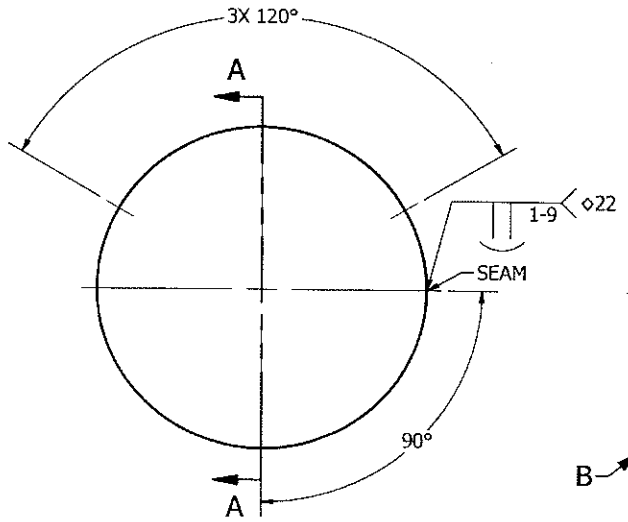

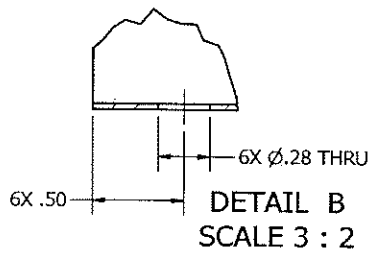

DETAIL B
SCALE 3 : 2

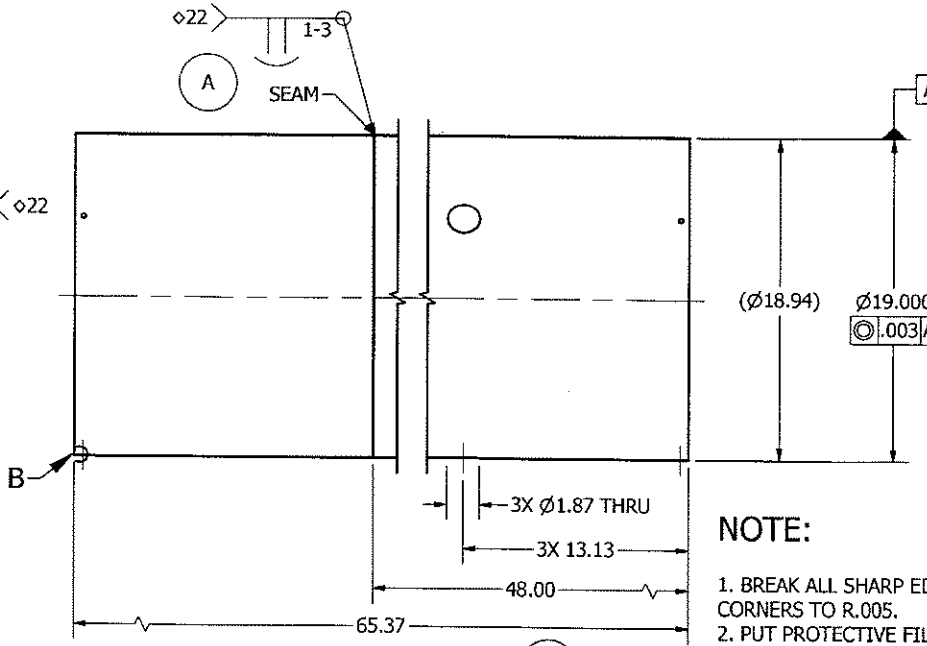

SECTION A-A
SCALE 1 : 7

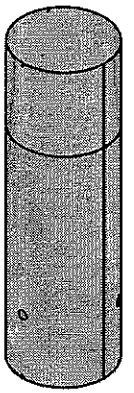

A
SCALE 1 : 20

NOTE:

1. BREAK ALL SHARP EDGES AND CORNERS TO R.005.
2. PUT PROTECTIVE FILM ON EACH SIDE TO PROTECT FINISH.
3. "◇22" WELD PER EDEN SPEC BC101-001-022, LATEST REV.

MATERIAL: PL 19 Ø X 65 1/4 X 1/32 THK
Aluminum-6061 ASTM B209
T4 TEMPER

FINISH: #8 MIRROR FINISH

ZONE	REV	DATE	CHANGED BY	EDR	REVISION DESCRIPTION
B3	A	2/24/2010	MAB	10-0055	2. ADDED WELD CALLOUT
A2	A	2/24/2010	MAB	10-0055	1. ADDED 48.00 DIM FOR WELD SEAM

TITLE: BC-02128
SIDE HEAT SHIELD

INFORMATION SHOWN ON THIS DRAWING IS PROPRIETARY AND THE SOLE PROPERTY OF EDEN CRYOGENICS, LLC. NO PART MAY BE REPRODUCED, DISCLOSED OR TRANSMITTED TO OTHERS FOR ANY PURPOSE WITHOUT WRITTEN AUTHORIZATION BY EDEN CRYOGENICS, LLC.

DWN: MAB 11/12/2009
CHKD: JHM 12/28/2009
ENGR: JHM 12/28/2009
APPR:
EDR: 09-0377
DATE: 12/28/2009
SCALE: 1:7

NOTES: (UNLESS OTHERWISE SPECIFIED)
1. DIMENSIONS ARE IN INCHES, CONFORMING TO ASME Y14.5-1994
ALL DIMENSIONS APPLY AFTER FINISH.
2. DE-BURR AND BREAK ALL SHARP EDGES AND CORNERS TO R.015 MAX.
3. SURFACE TEXTURE/FINISH 64 RMS

TOLERANCES:
X.X ± .030
X.XX ± .010
X.XXX ± .005
ANGULAR ± 1/2°

eden CRYOGENICS
8445 RAUSCH DRIVE
PLAIN CITY, OH 43064
614.873.3949
www.edencryogenics.com

SIZE: B
DRAWING/PART NUMBER: BC-02128-0036
SHEET: 1 OF 1
REV: A

Information Copy

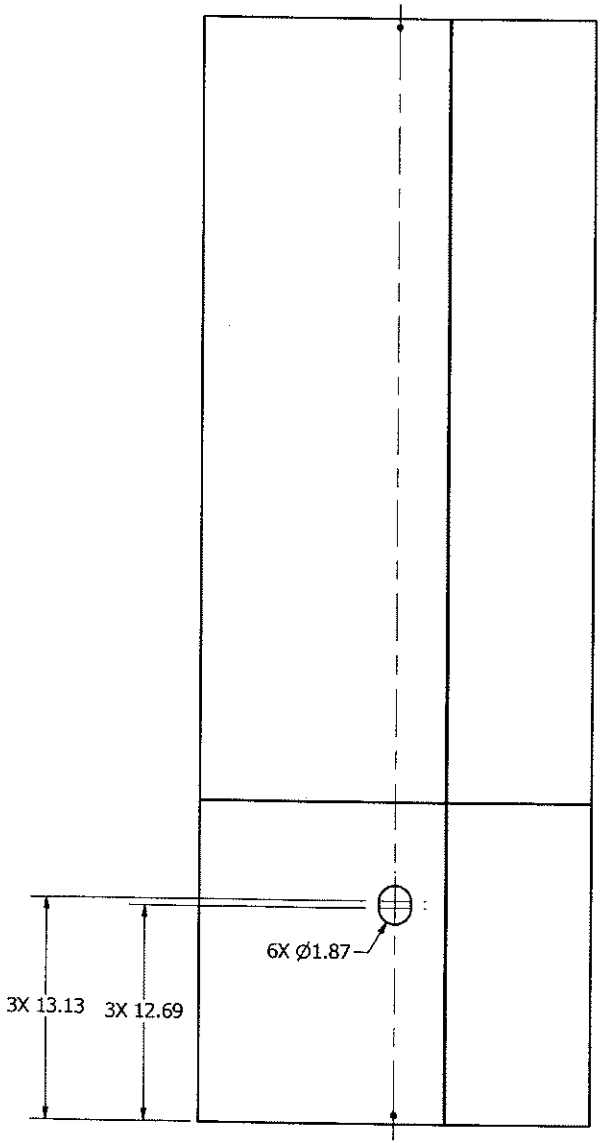

NOTE:

1. DRAWING IS ONLY FOR RE-WORKED SHEETS LISTED BELOW TO ADD THE SLOTTED HOLE.
   - 1.1. -0031a
   - 1.2. -0032a
   - 1.3. -0033b
   - 1.4. -0034b
   - 1.5. -0035b

MATERIAL:
Aluminum-6061 ASTM B209
T4 TEMPER

FINISH: #8 MIRROR FINISH

NOTES: (UNLESS OTHERWISE SPECIFIED)
1. DIMENSIONS ARE IN INCHES, CONFORMING TO ASME Y14.5-1994. ALL DIMENSIONS APPLY AFTER FINISH.
2. DE-BURR AND BREAK ALL SHARP EDGES AND CORNERS TO 0.015 MAX.
3. SURFACE TEXTURE/FINISH: 64 RMS

TOLERANCES:
X.X ± .030
X.XX ± .010
X.XXX ± .005
ANGULAR ± 1/2°

INFORMATION SHOWN ON THIS DRAWING IS PROPRIETARY AND THE SOLE PROPERTY OF EDEN CRYOGENICS, LLC AND IS NOT TO BE REPRODUCED, DISCLOSED OR TRANSMITTED TO OTHERS FOR ANY PURPOSE NOT AUTHORIZED BY EDEN CRYOGENICS, LLC.

eden CRYOGENICS
8445 RAUSCH DRIVE
PLAIN CITY, OH 43064
614.873.3949
www.edencryogenics.com

DWN: MAB 4/20/2010
CHK: JHM 4/20/2010
ENGR: JHM 4/20/2010
APPR:
EDR:
DATE: 4/20/2010
SCALE: 1:7

ZONE	REV	DATE	CHANGED BY	EDR	REVISION DESCRIPTION
	-				

TITLE
BC-02128
GENERAL SLOT ARRANGEMENT, SIDE HEAT SHIELD

SIZE: B
DRAWING/PART NUMBER: BC-02128-0031-SLOT
SHEET: 1 OF 1
REV: -

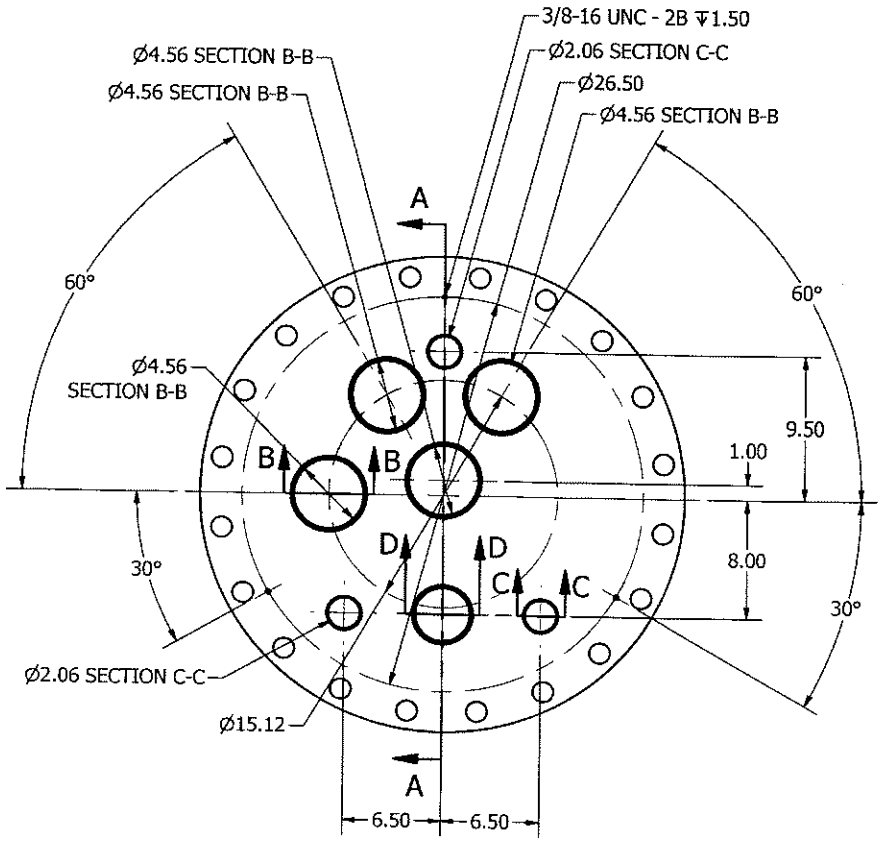

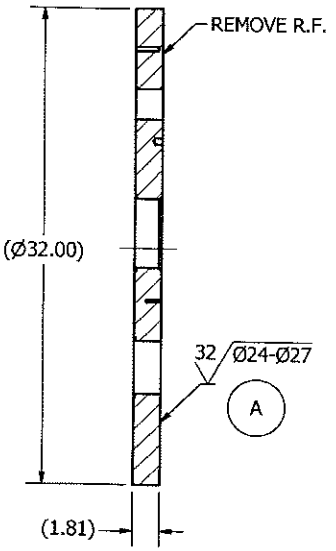

SECTION A-A
SCALE 1 : 8

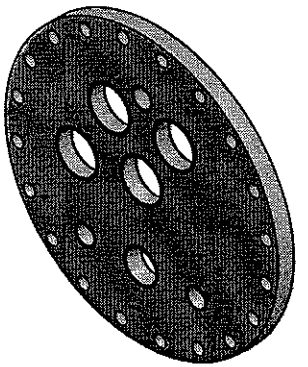

SCALE 1 : 10

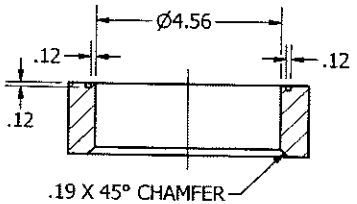

SECTION B-B
SCALE 1 : 3

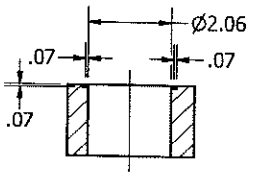

SECTION C-C
SCALE 1 : 3

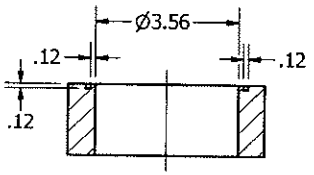

SECTION D-D
SCALE 1 : 3

REV STATUS	
SH	REV
1	B
2	-

NOTE:

1. BREAK ALL SHARP EDGES AND CORNERS TO R.005.
2. MACHINE FROM FL-384-150-005.

MATERIAL:
Stainless Steel 304/304L ASME SA182

FINISH: NATURAL

ZONE	REV	DATE	CHANGED BY	REVISION DESCRIPTION
A2	B	4/9/2010	MAB	ADDED SHEET 2.
	A	1/20/2010	MAB	10-0023 ADDED 024-077 SAMPLING LENGTH FOR 32 RMS SURFACE FINISH.

TITLE: BC-02128
OUTER VESSEL, TOP FLANGE

INFORMATION SHOWN ON THIS DRAWING IS PROPRIETARY AND THE SOLE PROPERTY OF EDEN CRYOGENICS, LLC. IT MAY NOT BE REPRODUCED, DISCLOSED OR TRANSMITTED TO OTHERS FOR ANY PURPOSE NOT PERMITTED BY EDEN CRYOGENICS, LLC

DWN: MAB 12/11/2009
CHKR: JHM 12/28/2009
ENGR: JHM 12/28/2009
APPR:
EDR: 09-0377
DATE: 12/28/2009
SCALE: 1:8

TOLERANCES:
X.X ± .030
X.XX ± .010
X.XXX ± .005
ANGULAR ± 1/2°

NOTES: (UNLESS OTHERWISE SPECIFIED)
1. DIMENSIONS ARE IN INCHES, CONFORMING TO ASME Y14.5-1994.
2. ALL DIMENSIONS APPLY AFTER FINISH.
2. DE-BURR AND BREAK ALL SHARP EDGES AND CORNERS TO R.015 MAX.
3. SURFACE TEXTURE/FINISH 64 RMS

eden CRYOGENICS
8445 RAUSCH DRIVE
PLAIN CITY, OH 43064
614.873.3949
www.edencryogenics.com

SIZE: B
DRAWING/PART NUMBER: BC-02128-0040
SHEET: 1 OF 2
REV: B

Information Copy

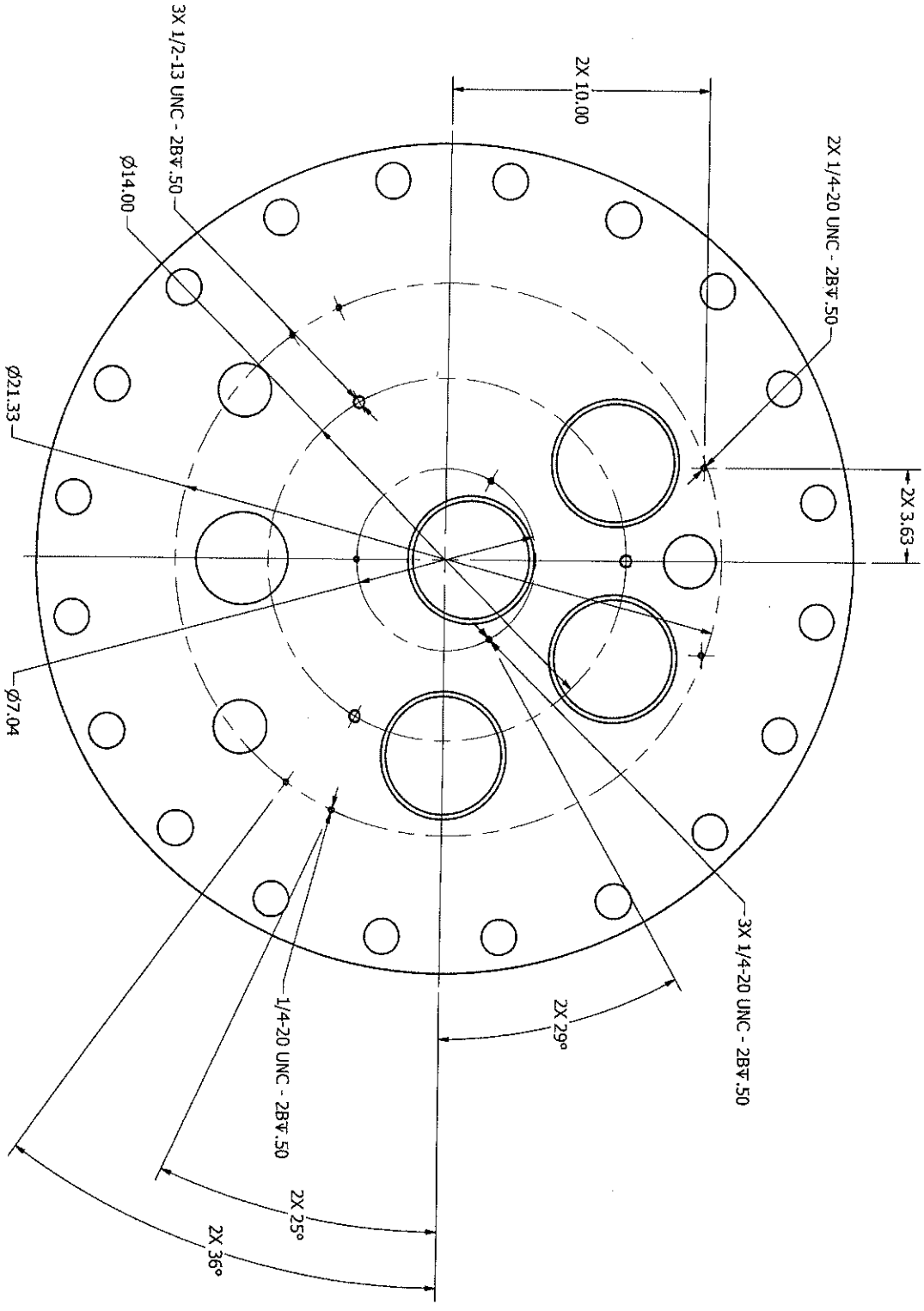

NOTES: (UNLESS OTHERWISE SPECIFIED)
1. DIMENSIONS ARE IN INCHES, CONFORMING TO ASME Y14.5-1994. ALL DIMENSIONS APPLY AFTER FINISH.
2. DE-BURR AND BREAK ALL SHARP EDGES AND CORNERS TO R.015 MAX.
3. SURFACE TEXTURE/FINISH 64 RMS

TOLERANCES:
X.X ±.030
X.XX ±.010
X.XXX ±.005
ANGULAR ± 1/2°

INFORMATION SHOWN ON THIS DRAWING IS PROPRIETARY AND THE SOLE PROPERTY OF EDEN CRYOGENICS, LLC AND IS NOT TO BE REPRODUCED, DISCLOSED OR TRANSMITTED TO OTHERS FOR ANY PURPOSE NOT AUTHORIZED BY EDEN CRYOGENICS, LLC.

eden CRYOGENICS
8445 RAUSCH DRIVE
PLAIN CITY, OH 43064
614.873.3949
www.edencryogenics.com

DWN: MAB 12/11/2009
CHKR: JHM 12/28/2009
ENGR: JHM 12/28/2009
APPR:

SIZE	DRAWING/PART NUMBER	SHEET	REV
B	BC-02128-0040	2 OF 2	

EDR: 10-0117
DATE: 12/28/2009
SCALE: 1:4

TITLE
BC-02128
OUTER VESSEL, TOP FLANGE

Information Copy

Information Copy

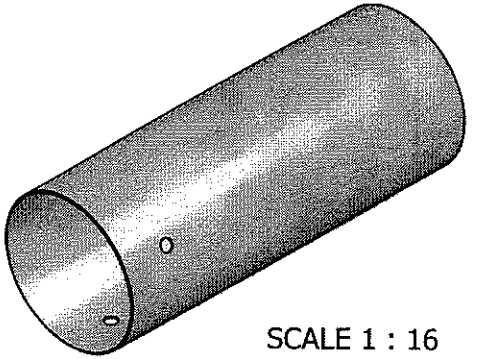

SCALE 1 : 16

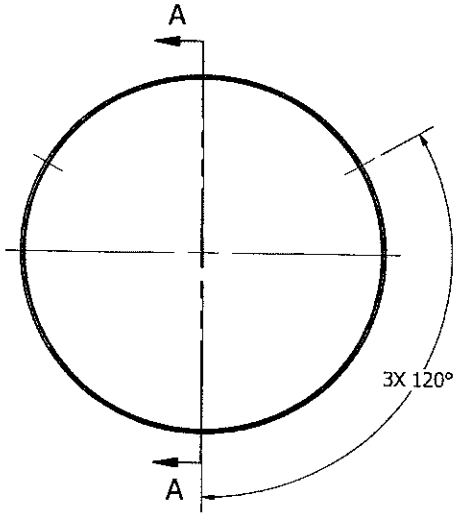

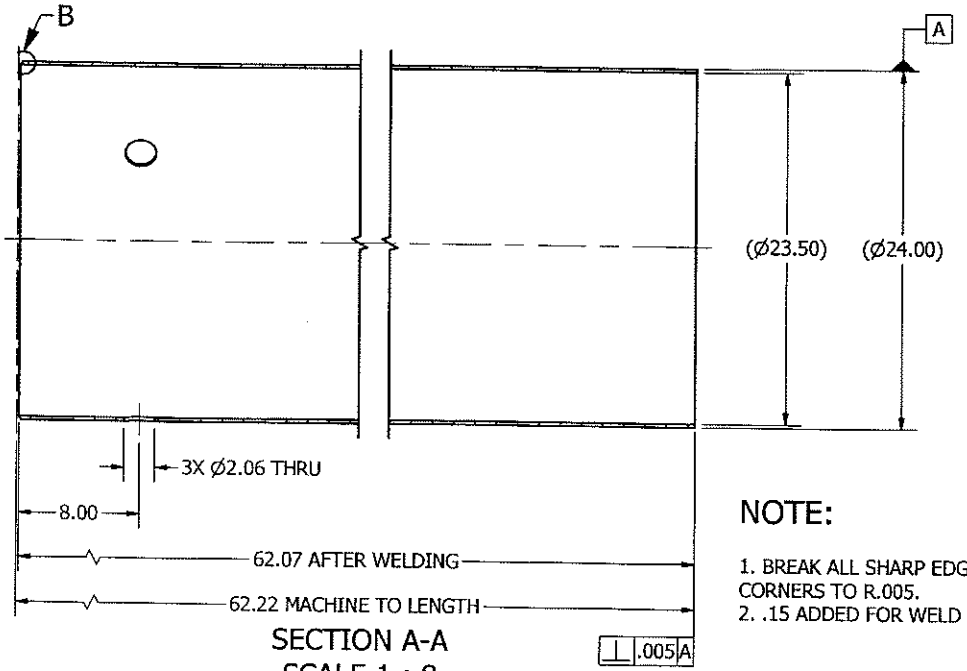

SECTION A-A
SCALE 1 : 8

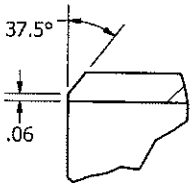

DETAIL B
SCALE 1 : 1

NOTE:

1. BREAK ALL SHARP EDGES AND CORNERS TO R.005.
2. .15 ADDED FOR WELD SHRINKAGE.

MATERIAL: PIPE, 24 NPS X SCH 10 X 62 1/4
Stainless Steel 304/304L ASME SA312
PI-384-010-021

FINISH: NATURAL

ZONE	REV	DATE	CHANGED BY	EDR	REVISION DESCRIPTION
-					

TITLE: BC-02128
VACUUM VESSEL, PIPE, 24 NPS X SCH 10

INFORMATION SHOWN ON THIS DRAWING IS PROPRIETARY AND THE SOLE PROPERTY OF EDEN CRYOGENICS, LLC AND IS NOT TO BE REPRODUCED, DISCLOSED OR TRANSMITTED TO OTHERS FOR ANY PURPOSE NOT AUTHORIZED BY EDEN CRYOGENICS, LLC

DWN: MAB 11/2/2009
CHKD: JHM 12/29/2009
ENGR: JHM 12/29/2009
APPR:
EDR: 09-0377
DATE: 12/28/2009
SCALE: 1:8

NOTES: (UNLESS OTHERWISE SPECIFIED)
1. DIMENSIONS ARE IN INCHES, CONFORMING TO ASME Y14.5-1994. ALL DIMENSIONS APPLY AFTER FINISH.
2. DE-BURR AND BREAK ALL SHARP EDGES AND CORNERS TO R.015 MAX.
3. SURFACE TEXTURE/FINISH: 64 RMS

TOLERANCES:
X.X ± .030
X.XX ± .010
X.XXX ± .005
ANGULAR ± 1/2°

eden CRYOGENICS
8445 RAUSCH DRIVE
PLAIN CITY, OH 43064
614.873.3949
www.edencryogenics.com

SIZE: B
DRAWING/PART NUMBER: BC-02128-0043
SHEET: 1 OF 1
REV: -

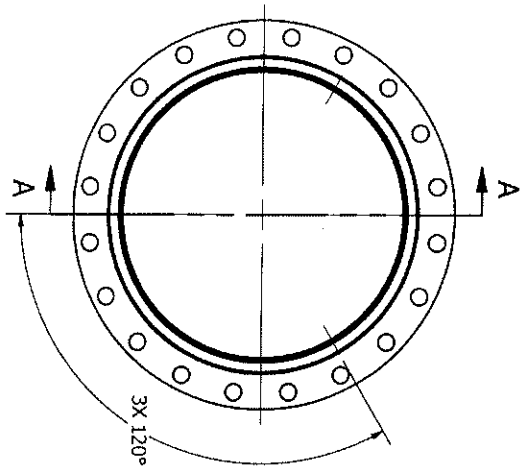

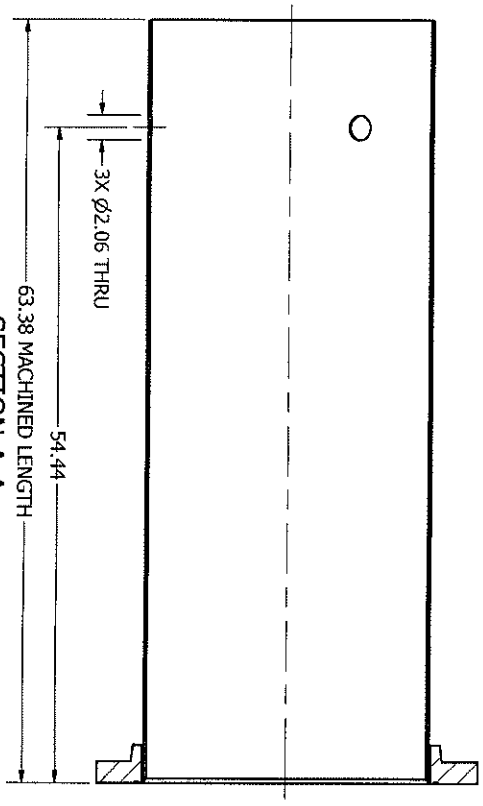

SECTION A-A
SCALE 1 : 10

NOTE:

BREAK ALL SHARP EDGES AND CORNERS TO R.005.

MATERIAL:
Welded Stainless Steel 304/304L

FINISH: NATURAL

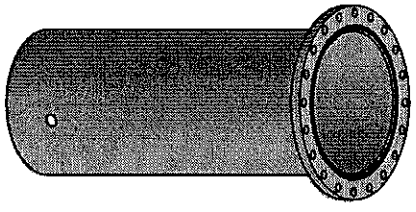

SCALE 1 : 20

NOTES: (UNLESS OTHERWISE SPECIFIED)
1. DIMENSIONS ARE IN INCHES, CONFORMING TO ASME Y14.5-1994. ALL DIMENSIONS APPLY AFTER FINISH.
2. DE-BURR AND BREAK ALL SHARP EDGES AND CORNERS TO R.015 MAX.
3. SURFACE TEXTURE/FINISH 64 RMS

TOLERANCES:
X.X ±.030
X.XX ±.010
X.XXX ±.005
ANGULAR ± 1/2°

INFORMATION SHOWN ON THIS DRAWING IS PROPRIETARY AND THE SOLE PROPERTY OF EDEN CRYOGENICS, LLC AND IS NOT TO BE REPRODUCED, DISCLOSED OR TRANSMITTED TO OTHERS FOR ANY PURPOSE NOT AUTHORIZED BY EDEN CRYOGENICS, LLC.

eden CRYOGENICS
8445 RAUSCH DRIVE
PLAIN CITY, OH 43064
614.873.3949
www.edencryogenics.com

DWN: MAB 2/26/2010
CHKD: JHM 2/26/2010
ENGR: JHM 2/26/2010
APPR:

ZONE	REV	DATE	CHANGED BY	EDR	REVISION DESCRIPTION
	-	-			

SIZE	DRAWING/PART NUMBER	SHEET	REV
B	BC-02128-0043-HOLES	1 OF 1	-

EDR: 10-0057
DATE: 2/26/2010
SCALE: 1:10

TITLE
BC-02128
VACUUM VESSEL, HOLE LOCATION

Information Copy

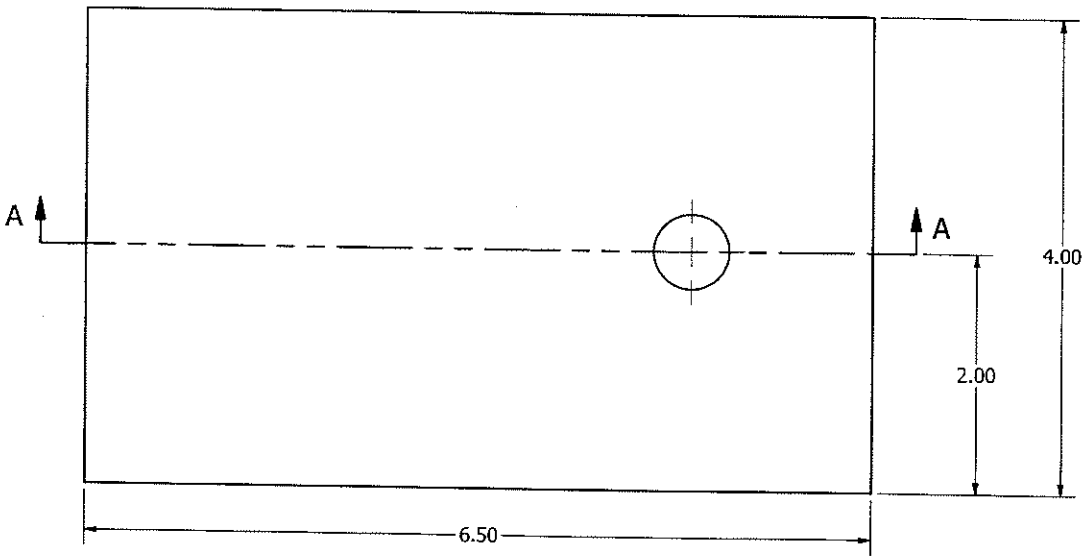

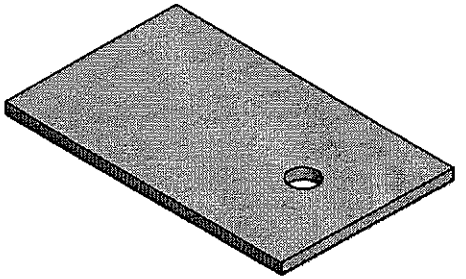

SCALE 1 : 2

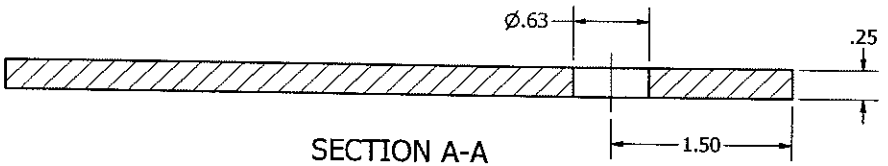

SECTION A-A
SCALE 1 : 1

NOTE:

BREAK ALL SHARP EDGES AND CORNERS TO R.005.

MATERIAL: PL 6 1/2 X 4 X 1/4 THK
Stainless Steel 304/304L ASME SA240

FINISH: NATURAL

ZONE	REV	DATE	CHANGED BY	EDR	REVISION DESCRIPTION

TITLE: BC-02128
OUTER VESSEL, FEET

INFORMATION SHOWN ON THIS DRAWING IS PROPRIETARY AND THE SOLE PROPERTY OF EDEN CRYOGENICS, LLC AND IS NOT TO BE REPRODUCED, DISCLOSED OR TRANSFERRED TO OTHERS FOR ANY PURPOSE WITHOUT PERMISSION BY EDEN CRYOGENICS, LLC.

DWN: MAB 11/2/2009
CHKD: JHM 12/28/2009
ENGR: JHM 12/28/2009
APPR:
EDR: 09-0377
DATE: 12/28/2009
SCALE: 1:1

NOTES: (UNLESS OTHERWISE SPECIFIED)
1. DIMENSIONS ARE IN INCHES, CONFORMING TO ASME Y14.5-1994. ALL DIMENSIONS APPLY AFTER FINISH.
2. DEBURR AND BREAK ALL SHARP EDGES AND CORNERS TO R.015 MAX.
3. SURFACE TEXTURE/FINISH 64 RMS

TOLERANCES:
X.X ± .030
X.XX ± .010
X.XXX ± .005
ANGULAR ± 1/2

eden CRYOGENICS
8445 RAUSCH DRIVE
PLAIN CITY, OH 43064
614.873.3949
www.edencryogenics.com

SIZE: B
DRAWING/PART NUMBER: BC-02128-0044
SHEET: 1 OF 1
REV: -

Information Conv
v3.10.15 88 / 424

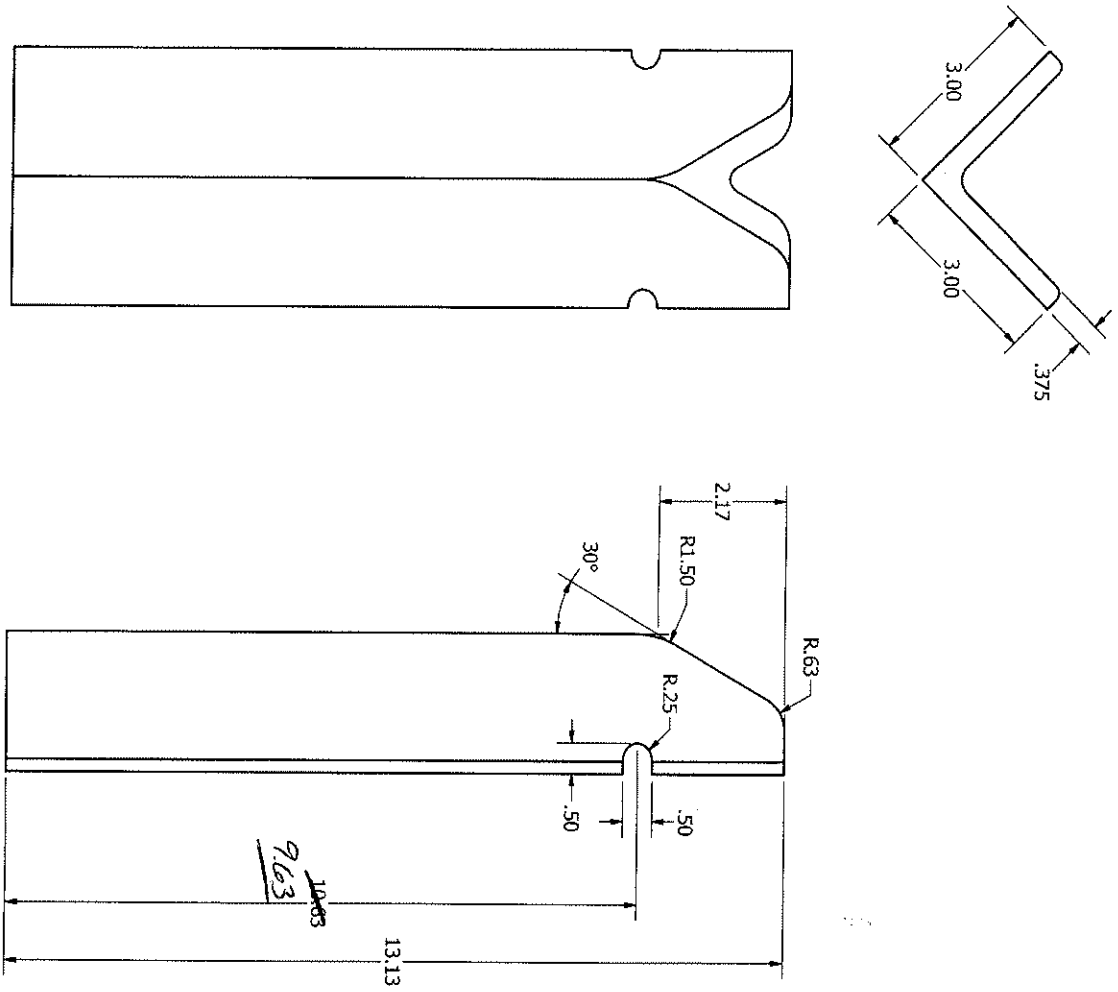

NOTE:

BREAK ALL SHARP EDGES AND CORNERS TO R.005.

MATERIAL:
Stainless Steel 304/304L ASME SA276

FINISH: NATURAL

SCALE 1 : 3

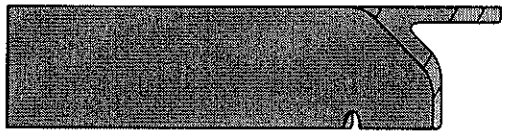

NOTES: (UNLESS OTHERWISE SPECIFIED)
1. DIMENSIONS ARE IN INCHES, CONFORMING TO ASME Y14.5-1994. ALL DIMENSIONS APPLY AFTER FINISH.
2. DE-BURR AND BREAK ALL SHARP EDGES AND CORNERS TO R.015 MAX.
3. SURFACE TEXTURE/FINISH 64 RMS

TOLERANCES:
X.X ±.030
X.XX ±.010
X.XXX ±.005
ANGULAR ± 1/2

INFORMATION SHOWN ON THIS DRAWING IS PROPRIETARY AND THE SOLE PROPERTY OF EDEN CRYOGENICS, LLC AND IS NOT TO BE REPRODUCED, DISCLOSED OR TRANSMITTED TO OTHERS FOR ANY PURPOSE NOT AUTHORIZED BY EDEN CRYOGENICS, LLC.

eden CRYOGENICS
8445 RAUSCH DRIVE
PLAIN CITY, OH 43064
614.873.3949
www.edencryogenics.com

DWN: MAB 12/11/2009
CHKR: JHM 12/28/2009
ENGR: JHM 12/28/2009
APPR:
EDR: 09-0377
DATE: 12/28/2009
SCALE: 1:2

ZONE	REV	DATE	CHANGED BY	EDR	REVISION DESCRIPTION

TITLE
BC-02128
OUTER VESSEL, ANGLE SUPPORT, 3 X 3 X 3/8 THK

SIZE	DRAWING/PART NUMBER	SHEET	REV
B	BC-02128-0049	1 OF 1	-

Information Copy

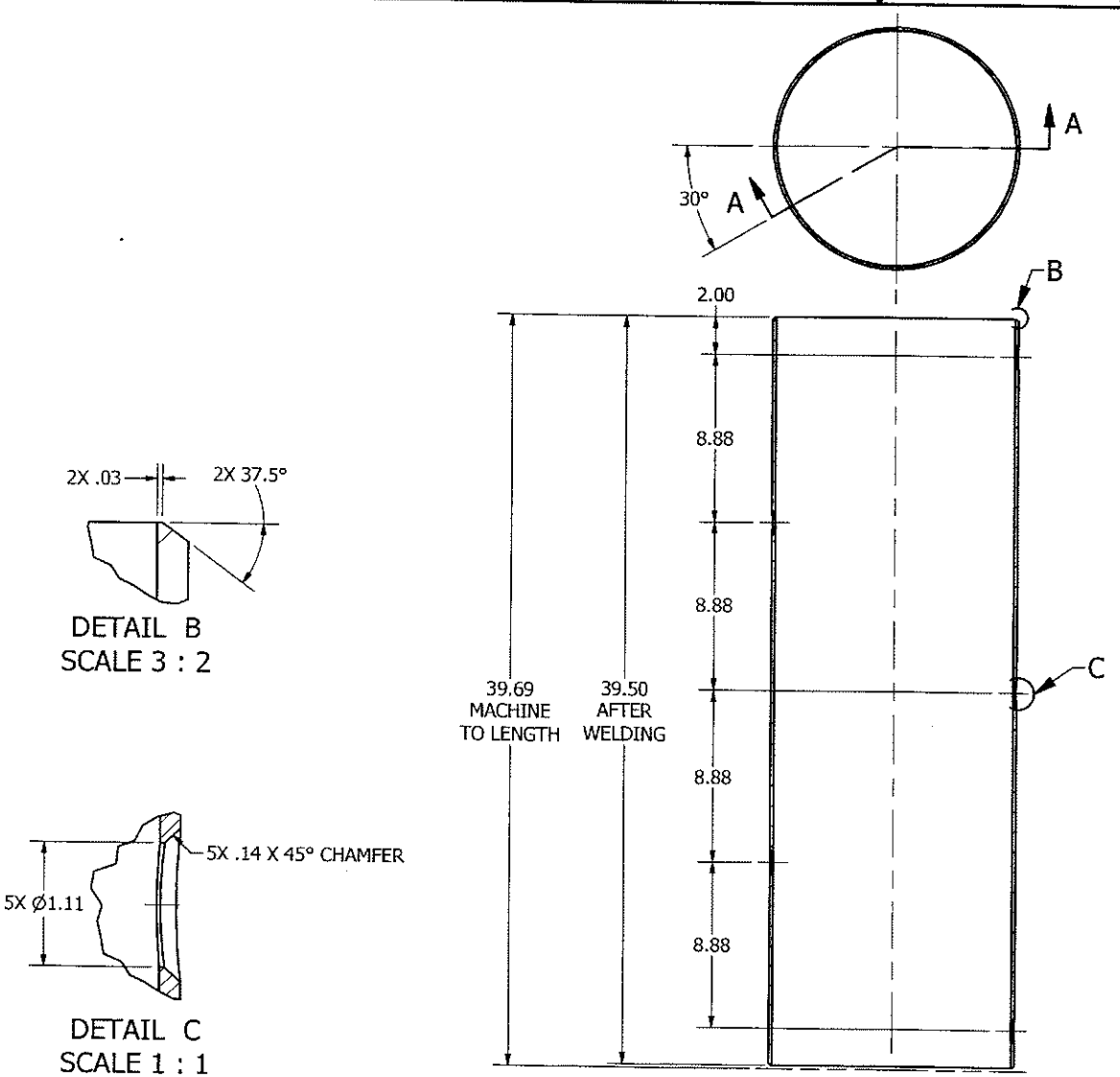

SECTION A-A
SCALE 1 : 6

DETAIL B
SCALE 3 : 2

DETAIL C
SCALE 1 : 1

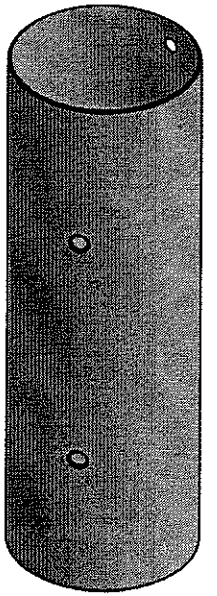

SCALE 1 : 8

NOTE:

1. BREAK ALL SHARP EDGES AND CORNERS TO R.005.
2. .19 ADDED FOR WELD SHRINKAGE.

MATERIAL: PIPE, 12 NPS X SCH 10 X 39 3/4
Stainless Steel 304/304L ASME SA312
PI-192-010-021

FINISH: NATURAL

ZONE	REV	DATE	CHANGED BY	EDR	REVISION DESCRIPTION
	-				

TITLE: BC-02128
PRESSURE VESSEL, PIPE, 12 NPS X SCH 10

NOTES: (UNLESS OTHERWISE SPECIFIED)
1. DIMENSIONS ARE IN INCHES, CONFORMING TO ASME Y14.5-1994. ALL DIMENSIONS APPLY AFTER FINISH.
2. DO NOT AND BREAK ALL SHARP EDGES AND CORNERS TO R.015 MAX.
3. SURFACE TEXTURE/FINISH 64 AES

TOLERANCES:
X.X ±.030
X.XX ±.010
X.XXX ±.005
ANGULAR ± 1/2°

INFORMATION SHOWN ON THIS DRAWING IS PROPRIETARY AND CONFIDENTIAL PROPERTY OF EDEN CRYOGENICS, LLC AND IS NOT TO BE REPRODUCED, DISCLOSED OR TRANSMITTED TO OTHERS FOR ANY PURPOSE WITHOUT AUTHORIZED BY EDEN CRYOGENICS, LLC

DWN: MAB 11/3/2009
CHKD: JHM 12/28/2009
ENGR: JHM 12/28/2009
APPR:

EDR: 09-0377
DATE: 12/28/2009
SCALE: 1:6

eden CRYOGENICS
8445 RAUSCH DRIVE
PLAIN CITY, OH 43064
614.873.3949
www.edencryogenics.com

SIZE: B
DRAWING/PART NUMBER: BC-02128-0052
SHEET: 1 of 1
REV: -

Information Conv
v3.10.15 90 / 424

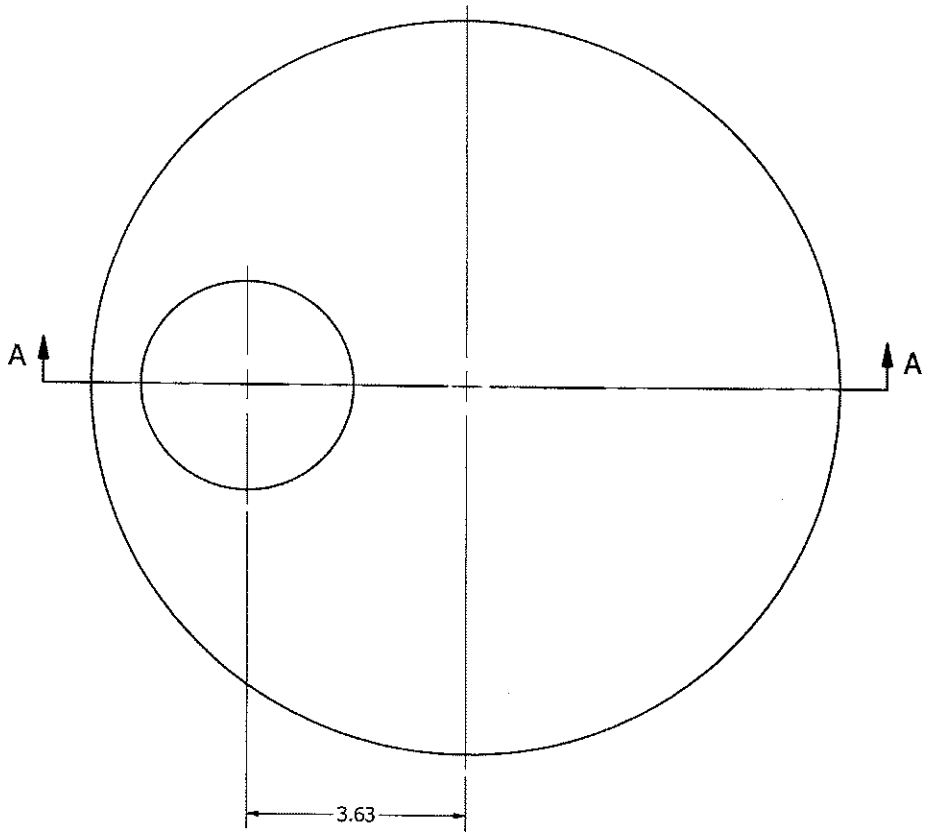

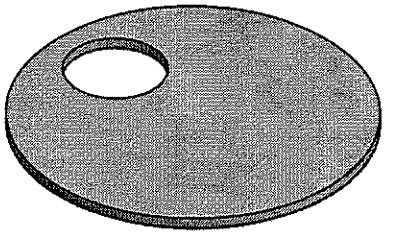

SCALE 1 : 4

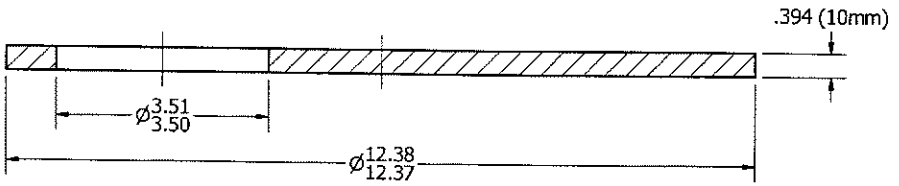

SECTION A-A
SCALE 1 : 2

NOTE:

BREAK ALL SHARP EDGES AND CORNERS TO R.005.

MATERIAL:
AISI 316L
SIKA -R 30

FINISH: NATURAL

NOTES: (UNLESS OTHERWISE SPECIFIED)
1. DIMENSIONS ARE IN INCHES, CONFORMING TO ASME Y14.5-1994. ALL DIMENSIONS APPLY AFTER FINISH.
2. DEBURR AND BREAK ALL SHARP EDGES AND CORNERS TO R.015 MAX.
3. SURFACE TEXTURE/FINISH 64 RMS

TOLERANCES:
X.X ± .030
X.XX ± .010
X.XXX ± .005
ANGULAR ± 1/2

INFORMATION SHOWN ON THIS DRAWING IS PROPRIETARY AND THE SOLE PROPERTY OF EDEN CRYOGENICS, LLC AND SHALL NOT BE REPRODUCED, DISCLOSED OR TRANSMITTED TO OTHERS FOR ANY PURPOSE WITHOUT PERMISSION BY EDEN CRYOGENICS, LLC.

eden CRYOGENICS
8445 RAUSCH DRIVE
PLAIN CITY, OH 43064
614.873.3949
www.edencryogenics.com

DWN. MAB 11/17/2009
CHKD. JHM 12/28/2009
ENGR. JHM 12/28/2009
APPR:

EDR: 09-0377
DATE: 12/28/2009
SCALE: 1:2

ZONE	REV	DATE	CHANGED BY	EDR	REVISION DESCRIPTION

TITLE
BC-02128
INNER VESSEL, GKN SINTERED METAL DISC

SIZE B
DRAWING/PART NUMBER BC-02128-0057
SHEET 1 OF 1
REV -

Information Copy
V3.10.15 91/424

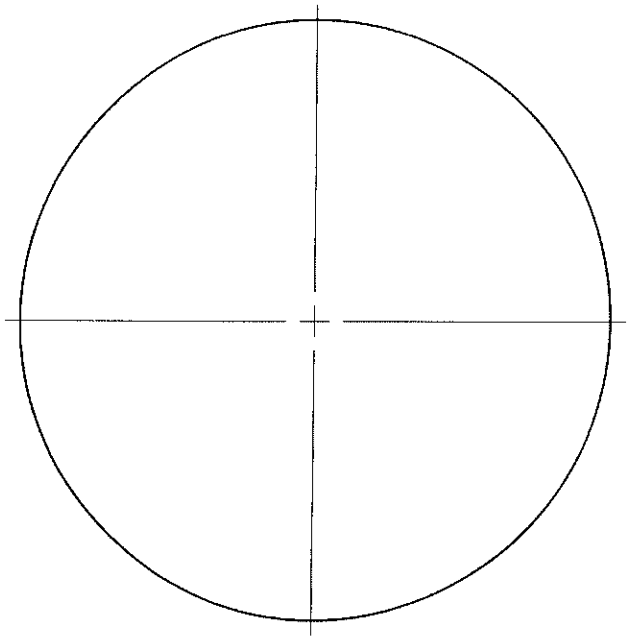

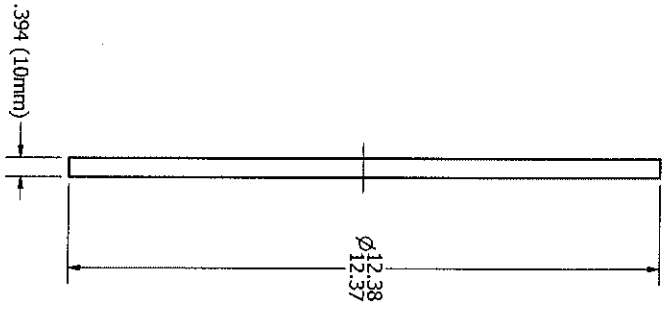

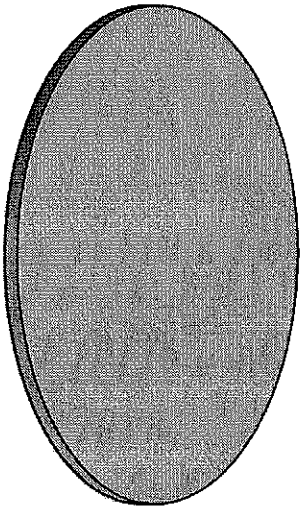

SCALE 1 : 3

NOTE:

BREAK ALL SHARP EDGES AND CORNERS TO R.005.

MATERIAL:
AISI 316L
SIKA -R 30

FINISH: NATURAL

NOTES: (UNLESS OTHERWISE SPECIFIED)
1. DIMENSIONS ARE IN INCHES, CONFORMING TO ASME Y14.5-1994. ALL DIMENSIONS APPLY AFTER FINISH.
2. DE-BURR AND BREAK ALL SHARP EDGES AND CORNERS TO R.015 MAX.
3. SURFACE TEXTURE/FINISH 64 RMS

TOLERANCES:
X.X ±.030
X.XX ±.010
X.XXX ±.005
ANGULAR ± 1/2°

INFORMATION SHOWN ON THIS DRAWING IS PROPRIETARY AND THE SOLE PROPERTY OF EDEN CRYOGENICS, LLC AND IS NOT TO BE REPRODUCED, DISCLOSED OR TRANSMITTED TO OTHERS FOR ANY PURPOSE NOT AUTHORIZED BY EDEN CRYOGENICS, LLC.

eden CRYOGENICS
8445 RAUSCH DRIVE
PLAIN CITY, OH 43064
614 873 3949
www.edencryogenics.com

DWN: MAB 12/8/2009
CHKR: JHM 12/28/2009
ENGR: JHM 12/28/2009
APPR:
EDR: 09-0377
DATE: 12/28/2009
SCALE: 2:5

ZONE	REV	DATE	CHANGED BY	EDR	REVISION DESCRIPTION
	-	-			

SIZE	DRAWING/PART NUMBER	SHEET	REV
B	BC-02128-0058	1 OF 1	-

TITLE
BC-02128
INNER VESSEL, GKN SINTERED METAL DISC

Information Conv

Information Copy
v3.10.15 93 / 424

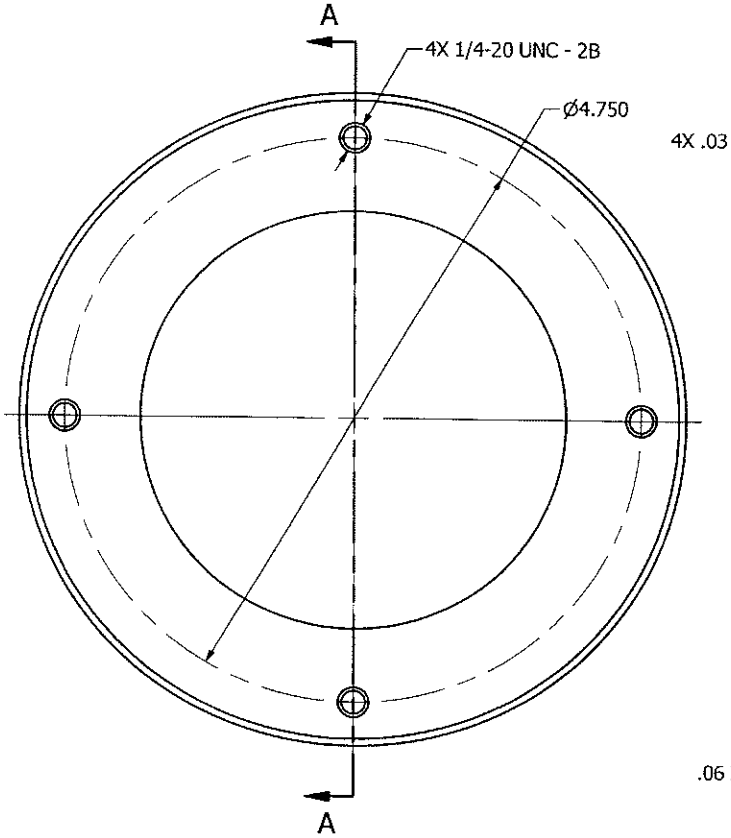

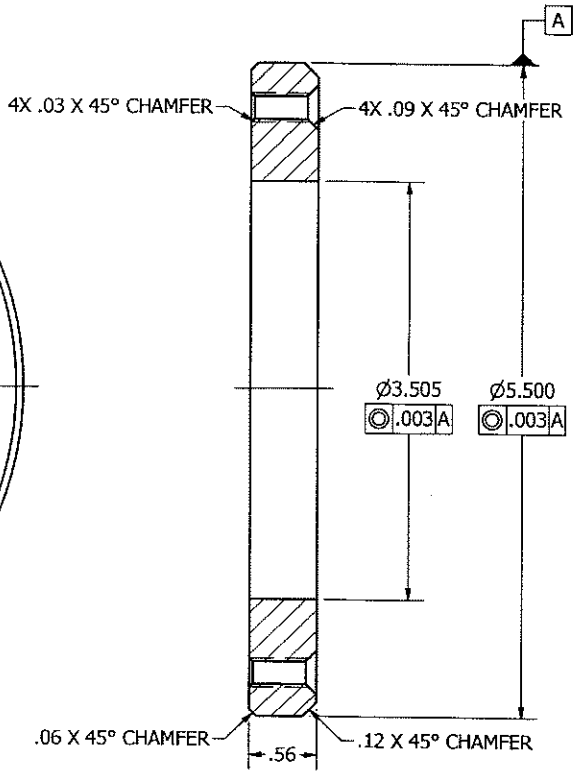

SECTION A-A
SCALE 1 : 1

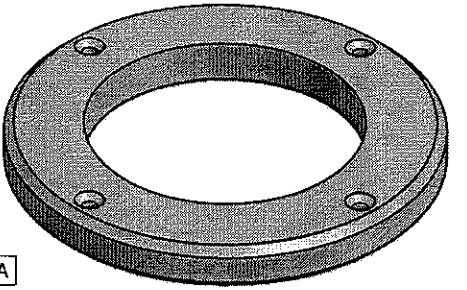

SCALE 2 : 3

NOTE:

BREAK ALL SHARP EDGES AND CORNERS TO R.005.

MATERIAL: PL 5 3/4 X 1/2 THK
Stainless Steel 304/304L ASTM A240

FINISH: NATURAL

NOTES: (UNLESS OTHERWISE SPECIFIED)
1. DIMENSIONS ARE IN INCHES, CONFORMING TO ASME Y14.5-1994. ALL DIMENSIONS APPLY AFTER FINISH.
2. DEBURR AND BREAK ALL SHARP EDGES AND CORNERS TO R.015 MAX.
3. SURFACE TEXTURE/FINISH 64 RMS

TOLERANCES:
X.X ± .030
X.XX ± .010
X.XXX ± .005
ANGULAR ± 1/2°

INFORMATION SHOWN ON THIS DRAWING IS PROPRIETARY AND THE SOLE PROPERTY OF EDEN CRYOGENICS, LLC AND IS NOT TO BE REPRODUCED, DISCLOSED OR TRANSMITTED TO OTHERS OR USED FOR ANY PURPOSE NOT AUTHORIZED BY EDEN CRYOGENICS, LLC.

8445 RAUSCH DRIVE
PLAIN CITY, OH 43064
614.873.5949
www.edencryogenics.com

DWN: MAB 11/25/2009
CHKD: JHH 12/28/2009
ENGR: JHH 12/28/2009
APPR:
EDR: 09-0377
DATE: 12/28/2009
SCALE: 1:1

ZONE	REV	DATE	CHANGED BY	EDR	REVISION DESCRIPTION
	-				

TITLE: BC-02128
PARALLEL PLATE RELIEF, BOTTOM PLATE

SIZE: B
DRAWING/PART NUMBER: BC-02128-0102
SHEET: 1 of 1
REV: -

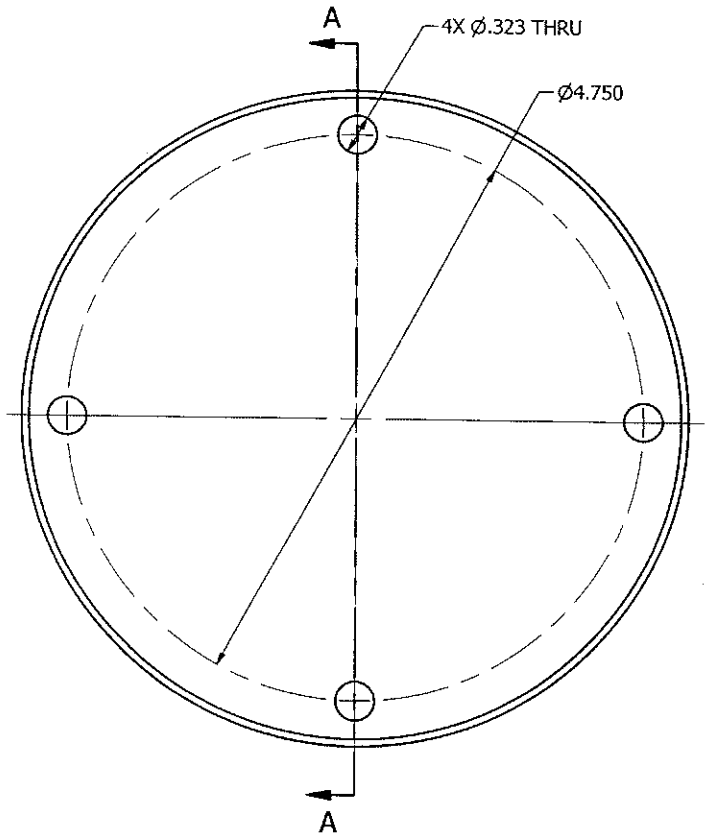

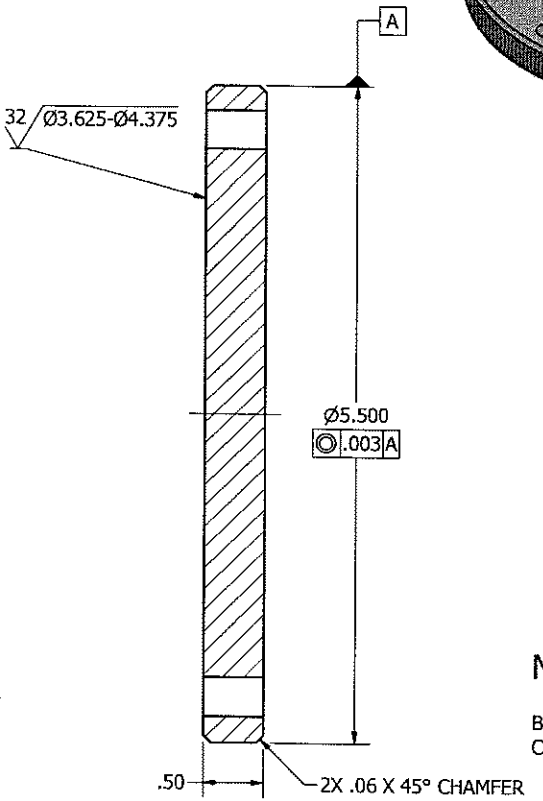

SECTION A-A
SCALE 1 : 1

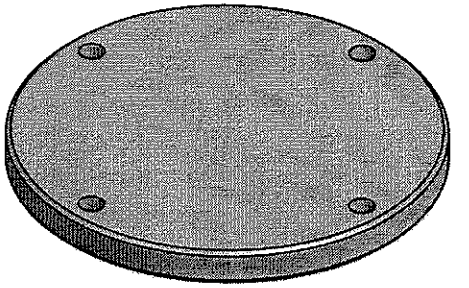

SCALE 2 : 3

NOTE:

BREAK ALL SHARP EDGES AND CORNERS TO R.005.

MATERIAL: PL 5 3/4 Ø X 1/2 THK
Stainless Steel 304/304L ASTM A240

FINISH: NATURAL

NOTES: (UNLESS OTHERWISE SPECIFIED)
1. DIMENSIONS ARE IN INCHES, CONFORMING TO ASME Y14.5-1994. ALL DIMENSIONS APPLY AFTER FINISH.
2. DEBURR AND BREAK ALL SHARP EDGES AND CORNERS TO R.015 MAX.
3. SURFACE TEXTURE/FINISH 64 RMS

TOLERANCES:
X.X ± .030
X.XX ± .010
X.XXX ± .005
ANGULAR ± 1/2°

eden CRYOGENICS
8445 RAUSCH DRIVE
PLAIN CITY, OH 43064
614.873.3949
www.edencryogenics.com

INFORMATION SHOWN ON THIS DRAWING IS PROPRIETARY AND CONFIDENTIAL PROPERTY OF EDEN CRYOGENICS, LLC AND IS NOT TO BE REPRODUCED, DISCLOSED OR TRANSMITTED TO OTHERS OR USED FOR ANY PURPOSE NOT AUTHORIZED BY EDEN CRYOGENICS, LLC.

DWN: MAB 11/25/2009
CHKD: JHM 12/28/2009
PMOD: JHM 12/28/2009
APPR:
ECR: 09-0377
DATE: 12/28/2009
SCALE: 1:1

ZONE	REV	DATE	CHANGED BY	ECR	REVISION DESCRIPTION
-	-	-	-	-	-

TITLE: BC-02128
PARALLEL PLATE RELIEF, TOP PLATE

SIZE: B
DRAWING/PART NUMBER: BC-02128-0103
SHEET: 1 OF 1
REV: -

Information Copy
v3.10.15 94 / 424

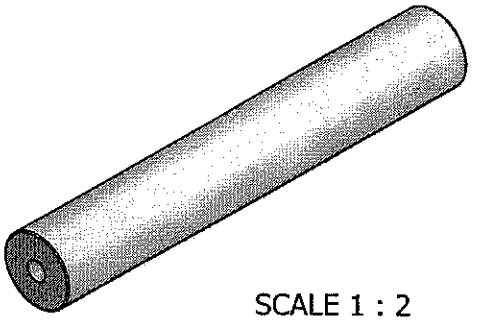

SCALE 1 : 2

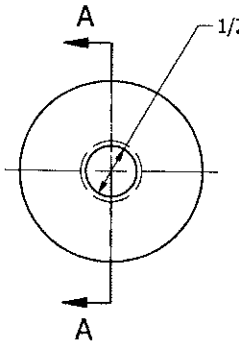

1/2-13 UNC - 2B ↧ 1.44

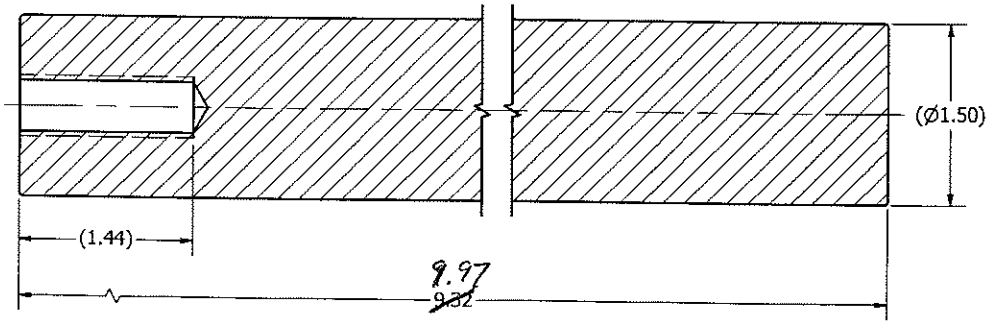

SECTION A-A
SCALE 1 : 1

NOTE:

BREAK ALL SHARP EDGES AND CORNERS TO R.005.

MATERIAL: BAR 1 1/2 Ø X 9 1/2
Aluminum-6061

FINISH: NATURAL

ZONE	REV	DATE	CHANGED BY	DIR
	-			

BC-02128
SHIPPING SUPPORT, PLUG

NOTES: (UNLESS OTHERWISE SPECIFIED)
1. DIMENSIONS ARE IN INCHES, CONFORMING TO ASME Y14.5-1994.
ALL DIMENSIONS APPLY AFTER FINISH.
2. DE-BURR AND BREAK ALL SHARP EDGES AND CORNERS TO R.015 MAX.
3. SURFACE TEXTURE/FINISH 64 RMS

TOLERANCES:
X.X ± .030
X.XX ± .010
X.XXX ± .005
ANGULAR ± 1/2°

INFORMATION SHOWN ON THIS DRAWING IS PROPRIETARY AND TRADE SECRET OF EDEN CRYOGENICS, LLC. AND IS NOT TO BE REPRODUCED, DISCLOSED OR TRANSMITTED TO OTHERS FOR ANY PURPOSE WITHOUT WRITTEN APPROVAL BY EDEN CRYOGENICS, LLC.

DWN: MAB 12/23/2009
CHKR: JHM 12/28/2009
ENGR: JHM 12/28/2009
APPR:

8445 RAUSCH DRIVE
PLAIN CITY, OH 43064
614.873.3949
www.edencryogenics.com

eden CRYOGENICS

ECR#: 09-0377
DATE: 12/28/2009
SCALE: 1:1

SIZE: B
DRAWING/PART NUMBER: BC-02128-0113
SHEET: 1 of 1
REV: -

Information Conv
v3.10.15 95 / 424

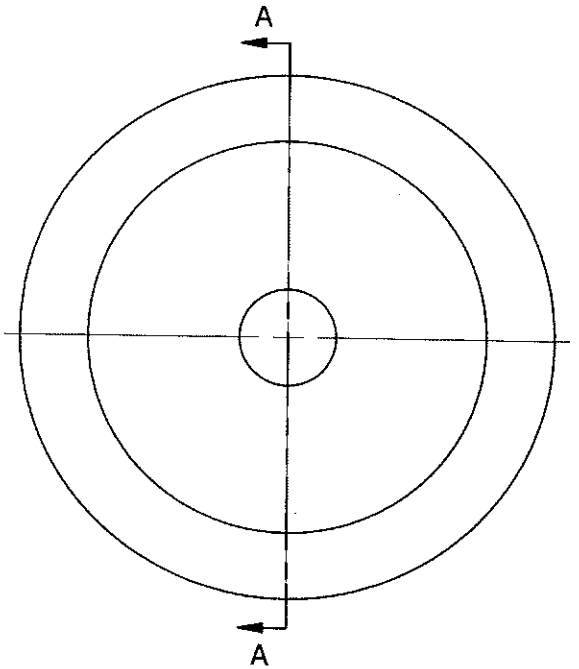

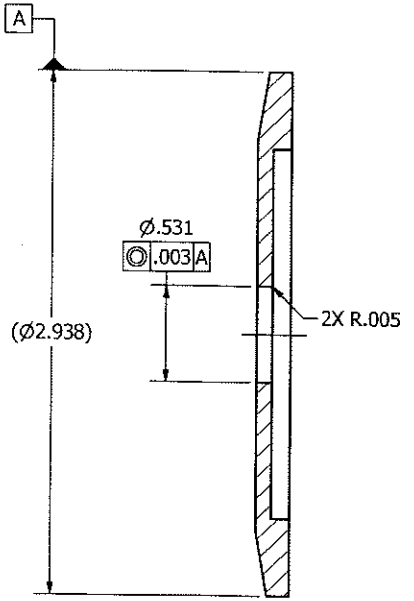

SECTION A-A
SCALE 3 : 2

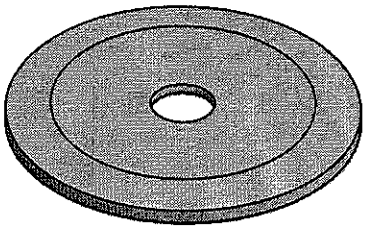

SCALE 1 : 1

NOTE:

1. BREAK ALL SHARP EDGES AND CORNERS TO R.005.
2. MACHINE FROM 712003.

MATERIAL:
Stainless Steel 304/304L

FINISH: NATURAL

ZONE	REV	DATE	CHANGED BY	EDR	REVISION DESCRIPTION
	-				

TITLE: BC-02128
FLANGE, BLANK, NW50, MODIFIED, MDC VACUUM PRODUCTS

NOTES: (UNLESS OTHERWISE SPECIFIED)
1. DIMENSIONS ARE IN INCHES, CONFORMING TO ASME Y14.5-1994. ALL DIMENSIONS APPLY AFTER FINISH.
2. DE-BURR AND BREAK ALL SHARP EDGES AND CORNERS TO R.015 MAX.
3. SURFACE TEXTURE/FINISH 64 RMS

TOLERANCES:
X.X ± .030
X.XX ± .010
X.XXX ± .005
ANGULAR ± 1/2°

INFORMATION SHOWN ON THIS DRAWING IS PROPRIETARY AND THE SOLE PROPERTY OF EDEN CRYOGENICS, LLC AND IS NOT TO BE REPRODUCED, DISCLOSED OR TRANSMITTED TO OTHERS OR FOR ANY PURPOSE NOT AUTHORIZED BY EDEN CRYOGENICS, LLC.

eden CRYOGENICS
8445 RAUSCH DRIVE
PLAIN CITY, OH 43064
614.873.5949
www.edencryogenics.com

DWN: MAB 12/23/2009
CHKD: JHM 12/28/2009
ENGR: JHM 12/28/2009
APPR:

EDR: 09-0377
DATE: 12/28/2009
SCALE: 3:2

SIZE: B
DRAWING/PART NUMBER: BC-02128-0114
SHEET: 1 OF 1
REV: -

Information Copy
V3.10.15 96 / 424

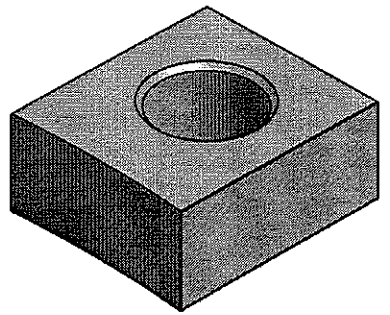

SCALE 2 : 1

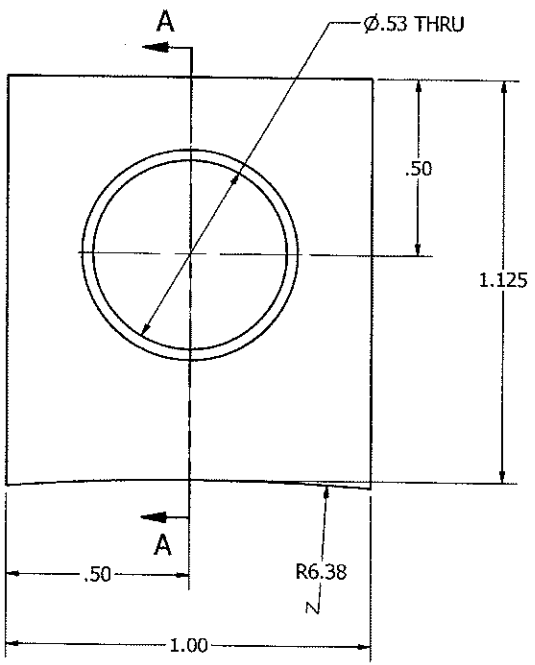

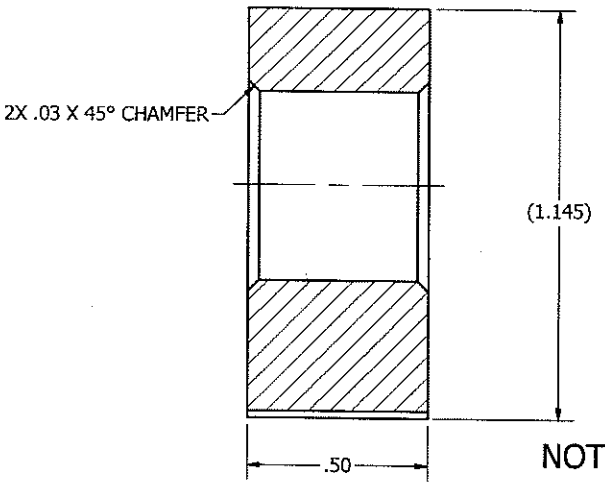

SECTION A-A
SCALE 3 : 1

NOTE:

BREAK ALL SHARP EDGES AND CORNERS TO R.005.

MATERIAL: PL 1 1/4 X 1 X 1/2 THK
Stainless Steel 304/304L ASTM A240

FINISH: NATURAL

NOTES: (UNLESS OTHERWISE SPECIFIED)
1. DIMENSIONS ARE IN INCHES, CONFORMING TO ASME Y14.5-1994. ALL DIMENSIONS APPLY AFTER FINISH.
2. DE-BURR AND BREAK ALL SHARP EDGES AND CORNERS TO R.015 MAX.
3. SURFACE TEXTURE/FINISH 64 RMS

TOLERANCES:
X.X ± .030
X.XX ± .010
X.XXX ± .005
ANGULAR ± 1/2

eden CRYOGENICS
8445 RAUSCH DRIVE
PLAIN CITY, OH 43064
614.873.3949
www.edencryogenics.com

SIZE: B
DRAWING/PART NUMBER: BC-02128-0124
SHEET: 1 OF 1
REV: -

INFORMATION SHOWN ON THIS DRAWING IS PROPRIETARY AND THE SOLE PROPERTY OF EDEN CRYOGENICS, LLC AND IS NOT TO BE REPRODUCED, DISCLOSED OR TRANSMITTED TO OTHERS OR FOR ANY PURPOSE NOT AUTHORIZED BY EDEN CRYOGENICS, LLC.

DWN: MAB 11/25/2009
CHKR: JHM 12/28/2009
ENGR: JHM 12/28/2009
APPR:
EDR: 09-0377
DATE: 12/28/2009
SCALE: 2:1

ZONE	REV	DATE	CHANGED BY	EDR	REVISION DESCRIPTION

TITLE: BC-02128
BRACKET, HANGING SUPPORT

Information Copy

eden CRYOGENICS
8445 RAUSCH DRIVE PLAIN CITY, OHIO 43064
TOLL FREE 877-273-4660

CERTIFIED BY EDEN CRYOGENICS, LLC

MAWP 165 PSI AT 932 °F
MAEWP 15 PSI AT 932 °F
MDMT -320 °F AT 165 PSI
EDEN SERIAL NO. 02128-01
YEAR BUILT 2010

BC-02128-1701

eden CRYOGENICS
8445 RAUSCH DRIVE PLAIN CITY, OHIO 43064
TOLL FREE 877-273-4660

CERTIFIED BY EDEN CRYOGENICS, LLC

MAWP 165 PSI AT 932 °F
MAEWP 15 PSI AT 932 °F
MDMT -320 °F AT 165 PSI
EDEN SERIAL NO. 02128-02
YEAR BUILT 2010

BC-02128-1702

eden CRYOGENICS
8445 RAUSCH DRIVE PLAIN CITY, OHIO 43064
TOLL FREE 877-273-4660

CERTIFIED BY EDEN CRYOGENICS, LLC

MAWP 165 PSI AT 932 °F
MAEWP 15 PSI AT 932 °F
MDMT -320 °F AT 165 PSI
EDEN SERIAL NO. 02128-03
YEAR BUILT 2010

BC-02128-1703

DUPLICATE
eden CRYOGENICS
8445 RAUSCH DRIVE PLAIN CITY, OHIO 43064
TOLL FREE 877-273-4660

CERTIFIED BY EDEN CRYOGENICS, LLC

MAWP 165 PSI AT 932 °F
MAEWP 15 PSI AT 932 °F
MDMT -320 °F AT 165 PSI
EDEN SERIAL NO. 02128-01
YEAR BUILT 2010

BC-02128-1704

DUPLICATE
eden CRYOGENICS
8445 RAUSCH DRIVE PLAIN CITY, OHIO 43064
TOLL FREE 877-273-4660

CERTIFIED BY EDEN CRYOGENICS, LLC

MAWP 165 PSI AT 932 °F
MAEWP 15 PSI AT 932 °F
MDMT -320 °F AT 165 PSI
EDEN SERIAL NO. 02128-02
YEAR BUILT 2010

BC-02128-1705

DUPLICATE
eden CRYOGENICS
8445 RAUSCH DRIVE PLAIN CITY, OHIO 43064
TOLL FREE 877-273-4660

CERTIFIED BY EDEN CRYOGENICS, LLC

MAWP 165 PSI AT 932 °F
MAEWP 15 PSI AT 932 °F
MDMT -320 °F AT 165 PSI
EDEN SERIAL NO. 02128-03
YEAR BUILT 2010

BC-02128-1706

NOTE:

1. BLACK TEXT AND GRAPHICS.
2. 3/16 LETTER STAMP SIZE.

MATERIAL:
Stainless Steel 304/304L
LB-003-000-001

FINISH: NATURAL

ZONE	REV	DATE	CHANGED BY	REVISION DESCRIPTION
	A	4/12/2010	MAB	10-0119 ADDED LABELS -1704, -1705 & -1706. DUPLICATES OF -1701, -1702 & -1703.

BC-02128
LABEL, CODED VESSEL

TITLE

INFORMATION SHOWN ON THIS DRAWING IS PROPRIETARY AND THE SOLE PROPERTY OF EDEN CRYOGENICS, LLC. IT MAY NOT BE REPRODUCED, INCLUDED OR TRANSMITTED TO OTHERS FOR ANY PURPOSE NOT AUTHORIZED BY EDEN CRYOGENICS, LLC.

NOTES: (UNLESS OTHERWISE SPECIFIED)
1. DIMENSIONS ARE IN INCHES, CONFORMING TO ASME Y14.5-1994. ALL DIMENSIONS APPLY AFTER FINISH.
2. DE-BURR AND BREAK ALL SHARP EDGES AND CORNERS TO 0.015 MAX.
3. SURFACE TEXTURE/FINISH 64 RMS

TOLERANCES:
X.X ± .030
X.XX ± .010
X.XXX ± .005
ANGULAR ± 1/2°

DWN: MAB 3/10/2010
CHKR: JHM 3/23/2010
ENGR: JHM 3/23/2010
APPR:

eden CRYOGENICS
8445 RAUSCH DRIVE
PLAIN CITY, OH 43064
614.873.3949
www.edencryogenics.com

EDR: 10-0080
DATE: 3/23/2010
SCALE: 3:4

SIZE B | DRAWING/PART NUMBER BC-02128-1701 | SHEET 1 OF 1 | REV A

Information Copy

eden CRYOGENICS
8445 RAUSCH DRIVE PLAIN CITY, OHIO 43064
TOLL FREE 877-273-4660

CERTIFIED BY EDEN CRYOGENICS, LLC

MAWP 15 PSI AT 70 °F
MAEWP 0 PSI AT 70 °F
MDMT 70 °F AT 15 PSI
EDEN SERIAL NO. 02128-07
YEAR BUILT 2010

BC-02128-1707

eden CRYOGENICS
8445 RAUSCH DRIVE PLAIN CITY, OHIO 43064
TOLL FREE 877-273-4660

CERTIFIED BY EDEN CRYOGENICS, LLC

MAWP 15 PSI AT 70 °F
MAEWP 0 PSI AT 70 °F
MDMT 70 °F AT 15 PSI
EDEN SERIAL NO. 02128-08
YEAR BUILT 2010

BC-02128-1708

eden CRYOGENICS
8445 RAUSCH DRIVE PLAIN CITY, OHIO 43064
TOLL FREE 877-273-4660

CERTIFIED BY EDEN CRYOGENICS, LLC

MAWP 15 PSI AT 70 °F
MAEWP 0 PSI AT 70 °F
MDMT 70 °F AT 15 PSI
EDEN SERIAL NO. 02128-09
YEAR BUILT 2010

BC-02128-1709

NOTE:

1. BLACK TEXT AND GRAPHICS.
2. 3/16 LETTER STAMP SIZE.

MATERIAL:
Stainless Steel 304/304L
LB-003-000-001

FINISH: NATURAL

ZONE	REV	DATE	CHANGED BY	EDR	REVISION DESCRIPTION
-					

TITLE: BC-02128 LABEL, CODED VESSEL

NOTES: (UNLESS OTHERWISE SPECIFIED)
1. DIMENSIONS ARE IN INCHES, CONFORMING TO ASME Y14.5-1994. ALL DIMENSIONS APPLY AFTER FINISH.
2. DE-BURR AND BREAK ALL SHARP EDGES AND CORNERS TO 0.015 MAX.
3. SURFACE TEXTURE/FINISH: 64 RMS

TOLERANCES:
X.X ± .030
X.XX ± .010
X.XXX ± .005
ANGULAR ± 1/2°

INFORMATION SHOWN ON THIS DRAWING IS CONFIDENTIAL AND THE SOLE PROPERTY OF EDEN CRYOGENICS, LLC AND IS NOT TO BE REPRODUCED OR DISCLOSED TO THIRD PARTIES OR TRANSMITTED TO OTHERS FOR ANY PURPOSE NOT AUTHORIZED BY EDEN CRYOGENICS, LLC.

eden CRYOGENICS
8445 RAUSCH DRIVE
PLAIN CITY, OH 43064
614.873.3949
www.edencryogenics.com

DWN: MAB 4/12/2010
CHKD: JHH 6/14/2010
ENGR: JHH 6/14/2010
APPR:
EDR: 10-0205
DATE: 6/14/2010
SCALE: 3:4

SIZE: B
DRAWING/PART NUMBER: BC-02128-1707
SHEET: 1 OF 1
REV: -

Information Co

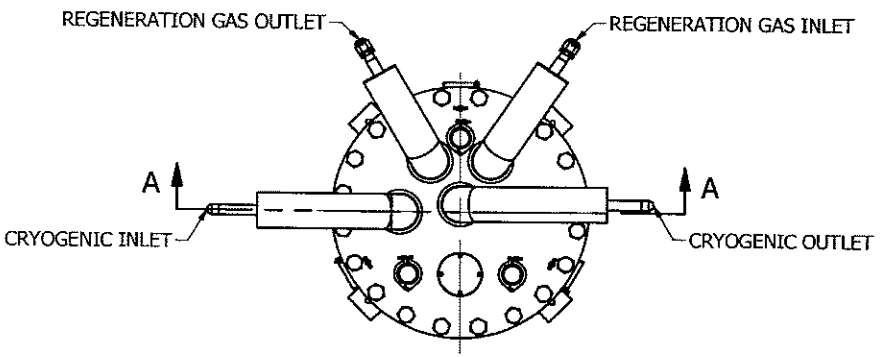

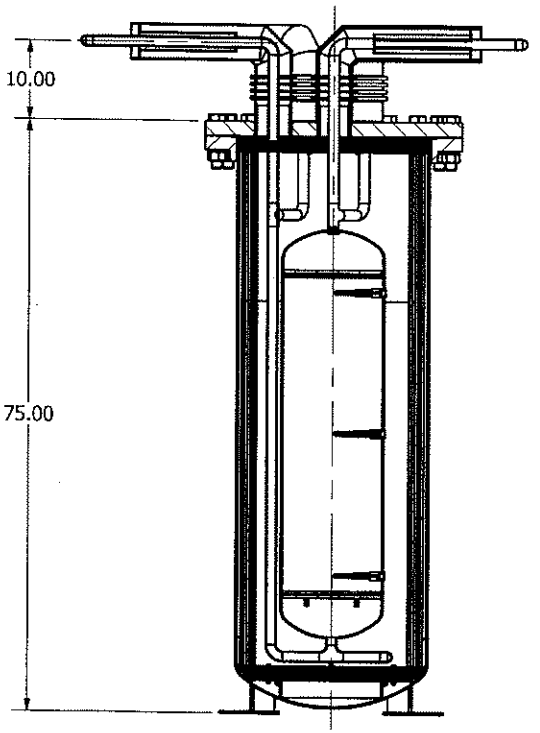

SECTION A-A
SCALE 1 : 15

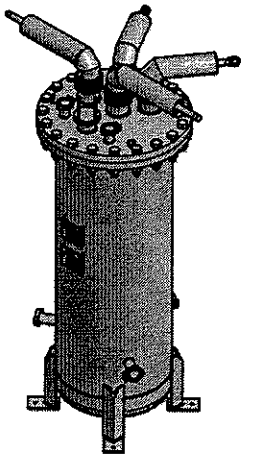

SCALE 1 : 25

REV STATUS	
SH	REV
1	A
2	-
3	A

NOTE:

1. BREAK ALL SHARP EDGES AND CORNERS TO R.005.
2. MASS SPEC. OUTER VESSEL PER EDEN CRYOGENICS SPEC. BC-101-070-001.
3. PRESSURE INNER VESSEL AND PIPING TO 1 PSI WITH NITROGEN.
4. PRIOR TO SHIPMENT, INSTALL SHIPPING PLUGS BC-02128-5920.

NOTES: (UNLESS OTHERWISE SPECIFIED)
1. DIMENSIONS ARE IN INCHES, CONFORMING TO ASME Y14.5-1994. ALL DIMENSIONS APPLY AFTER FINISH.
2. DE BURR AND BREAK ALL SHARP EDGES AND CORNERS TO R.015 MAX.
3. SURFACE TEXTURE/FINISH 64 RMS

TOLERANCES:
X.X ±.030
X.XX ±.010
X.XXX ±.005
ANGULAR ± 1/2°

eden CRYOGENICS
8445 RAUSCH DRIVE
PLAIN CITY, OH 43064
614.873.3949
www.edencryogenics.com

DWN: MAB 10/15/2009
CHKR: JKM 12/28/2009
ENGR: JKM 12/28/2009
APPR:
EDR: 09-0377
DATE: 12/28/2009
SCALE: 1:15

SIZE: B
DRAWING/PART NUMBER: BC-02128-5800-01
SHEET: 1 OF 3
REV: A

ZONE	REV	DATE	CHANGED BY	REVISION DESCRIPTION
	A	5/22/2010	MAB	10-0214 SEE SHEET 3 FOR REV A.

TITLE: BC-02128
ASSEMBLY, LIQUID ARGON TPC PURITY DEMO PURIFIER VESSEL

Information Copy
v3.10.15 100 / 424

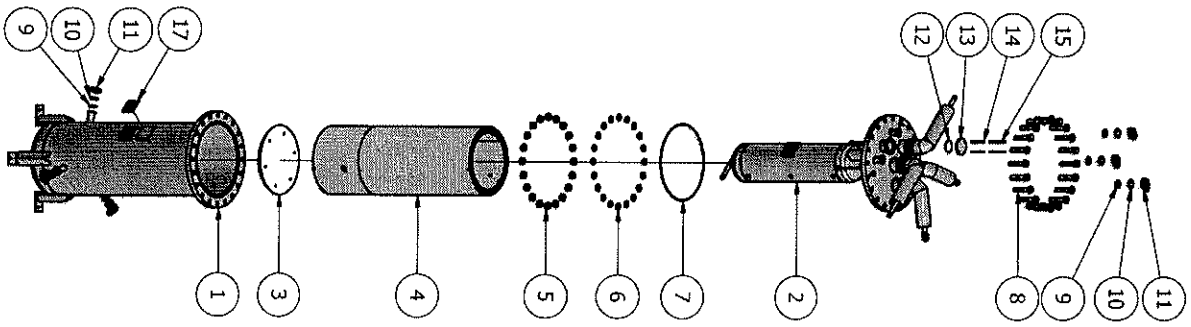

NOTES: (UNLESS OTHERWISE SPECIFIED)
1. DIMENSIONS ARE IN INCHES, CONFORMING TO ASME Y14.5-1994. ALL DIMENSIONS APPLY AFTER FINISH.
2. DE-BURR AND BREAK ALL SHARP EDGES AND CORNERS TO R.015 MAX.
3. SURFACE TEXTURE/FINISH 64 RMS

TOLERANCES:
X.X ±.030
X.XX ±.010
X.XXX ±.005
ANGULAR ± 1/2

INFORMATION SHOWN ON THIS DRAWING IS PROPRIETARY AND THE SOLE PROPERTY OF EDEN CRYOGENICS, LLC AND IS NOT TO BE REPRODUCED, DISCLOSED OR TRANSMITTED TO OTHERS FOR ANY PURPOSE NOT AUTHORIZED BY EDEN CRYOGENICS, LLC.

eden CRYOGENICS
8445 RAUSCH DRIVE
PLAIN CITY, OH 43064
614.873.3949
www.edencryogenics.com

DWN: MAB 10/15/2009
CHKR: JHM 12/28/2009
ENGR: JHM 12/28/2009
APPR:
EDR: 09-0377
DATE: 12/28/2009
SCALE: 1:40

ZONE	REV	DATE	CHANGED BY	EDR	REVISION DESCRIPTION
	-				

SIZE	DRAWING/PART NUMBER	SHEET	REV
B	BC-02128-5800-01	2 OF 3	-

TITLE
BC-02128
ASSEMBLY, LIQUID ARGON TPC PURITY DEMO PURIFIER VESSEL

Information Copy

PARTS LIST

ITEM	ITEM QTY	PART NUMBER	DESCRIPTION	STOCK NUMBER	MATERIAL
1	1	BC-02128-5810	WELDMENT, VACUUM VESSEL		Welded Stainless Steel 304/304L
2	1	BC-02128-5815	FINAL ASSEMBLY, LAR PRESSURE VESSEL W/ PORTS		Welded Stainless Steel 304/304L
3	1	BC-02128-5890	ASSEMBLY, HEAT SHIELDS, BOTTOM		
4	1	BC-02128-5900	ASSEMBLY, HEAT SHIELDS, SIDE		
5	20	FA-020-812-006	HEX NUT, INCH, 1 1/4-7 UNC		Stainless Steel 304/304L ASTM A194 GR 8
6	20	FA-020-812-030	SPRING LOCK WASHER, 1 1/4		Stainless Steel 18-8
7	1	HW-001-001-474	VITON O-RING	2-474	Viton
8	20	FA-020-112-326	HEX BOLT, INCH, 1 1/4-7 UNC X 6 LG		Stainless Steel 304/304L ASTM A193 GR B8
9	6	710003	CENTERING RING, MDC VACUUM PRODUCTS		
10	6	712003	FLANGE, BLANK, NW50, MDC VACUUM PRODUCTS		Stainless Steel 304/304L
11	6	701003	CLAMP, HINGED, MDC VACUUM PRODUCTS		
12	1	HW-001-001-241	VITON O-RING	2-241	Viton
13	1	BC-02128-0103	PARALLEL PLATE RELIEF, TOP PLATE		Stainless Steel 304/304L ASTM A240
14	4	BC-02128-0104	LIFT PLATE, SPRING	9663K56	Stainless Steel 302
15	4	BC-02128-0105	SHOULDER SCREW, 5/16 Ø X 3 1/2, 1/4-20 UNC	90298A597	Stainless Steel 18-8
16	3	BC-02128-5920	SHIPPING PLUG		
17	1	BC-02128-1704	LABEL, CODED VESSEL, DUPLICATE	LB-003-000-001	Stainless Steel 304/304L

A

A

VESSEL TAGS

SERIAL NO.	PRESSURE VESSEL LABEL	DUPLICATE LABEL	VACUUM VESSEL LABEL
02128-01	BC-02128-1701	BC-02128-1704	BC-02128-1707

NOTES: (UNLESS OTHERWISE SPECIFIED)
1. DIMENSIONS ARE IN INCHES, CONFORMING TO ASME Y14.5-1994. ALL DIMENSIONS APPLY AFTER FINISH.
2. DE-BURR AND BREAK ALL SHARP EDGES AND CORNERS TO 0.015 MAX.
3. SURFACE TEXTURE/FINISH 64 RMS

TOLERANCES:
X.X ± .030
X.XX ± .010
X.XXX ± .005
ANGULAR ± 1/2°

INFORMATION SHOWN ON THIS DRAWING IS PROPRIETARY AND THE SOLE PROPERTY OF EDEN CRYOGENICS, LLC AND IS NOT TO BE REPRODUCED, DISCLOSED OR TRANSMITTED TO OTHERS OR FOR ANY PURPOSE NOT AUTHORIZED BY EDEN CRYOGENICS, LLC.

eden CRYOGENICS
8445 RAUSCH DRIVE
PLAIN CITY, OH 43064
614.873.5949
www.edencryogenics.com

DWN: MAB 10/15/2009
CHKD: JHM 12/28/2009
ENGR: JHM 12/28/2009
APPR:

ZONE	REV	DATE	CHANGED BY	REVISION DESCRIPTION
B4	A	5/22/2010	MAB	10-0214 2. ADDED ITEM 17: LABEL PART NO. BC-02128-1704.
A4	A	5/22/2010	MAB	10-0214 1. ADDED VESSEL TAGS TABLE.

TITLE
BC-02128
ASSEMBLY, LIQUID ARGON TPC PURITY DEMO PURIFIER VESSEL

CR: 09-0377
DATE: 12/28/2009
SCALE:

SIZE: B
DRAWING/PART NUMBER: BC-02128-5800-01
SHEET: 3 OF 3
REV: A

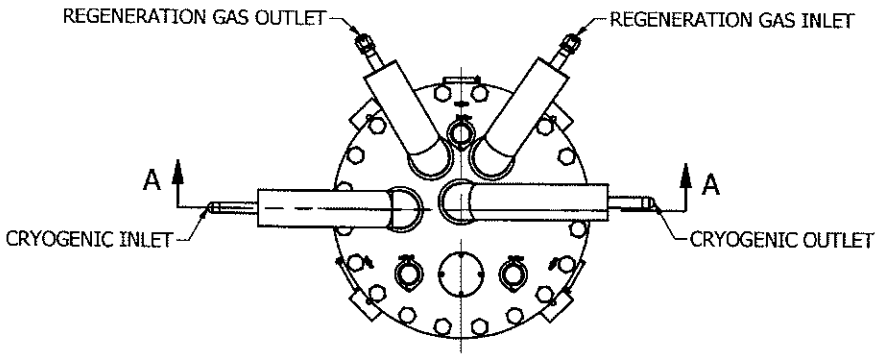

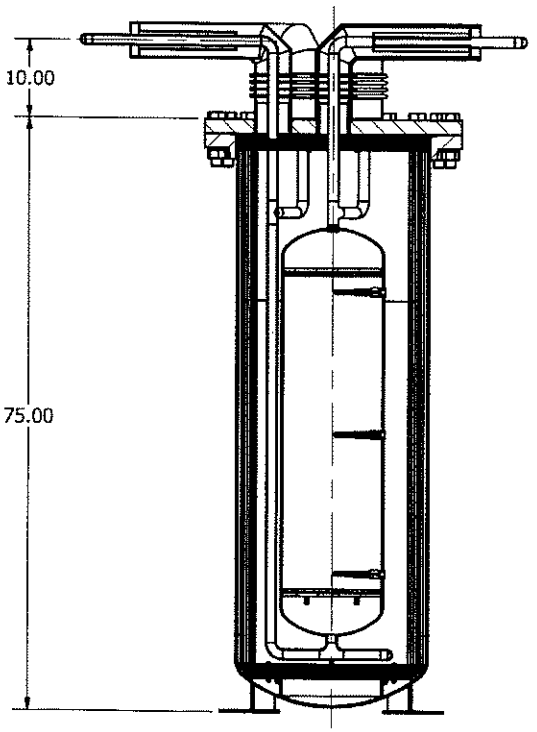

SECTION A-A
SCALE 1 : 15

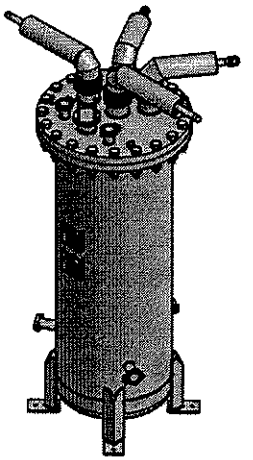

SCALE 1 : 25

REV STATUS	
SH	REV
1	A
2	-
3	A

NOTE:

1. BREAK ALL SHARP EDGES AND CORNERS TO R.005.
2. MASS SPEC. OUTER VESSEL PER EDEN CRYOGENICS SPEC. BC-101-070-001.
3. PRESSURE INNER VESSEL AND PIPING TO 1 PSI WITH NITROGEN.
4. PRIOR TO SHIPMENT, INSTALL SHIPPING PLUGS BC-02128-5920.

ZONE	REV	DATE	CHANGED BY	REVISION DESCRIPTION
	A	6/22/2010	MAB	10-0214 SEE SHEET 3 FOR REV A.
			EDR	

TITLE: BC-02128
ASSEMBLY, LIQUID ARGON TPC PURITY DEMO PURIFIER VESSEL

INFORMATION SHOWN ON THIS DRAWING IS PROPRIETARY AND THE SOLE PROPERTY OF EDEN CRYOGENICS, LLC AND IS NOT TO BE REPRODUCED, DISCLOSED OR TRANSMITTED TO OTHERS FOR ANY PURPOSE NOT AUTHORIZED BY EDEN CRYOGENICS, LLC.

DWN: MAB 10/15/2009
CHKD: JHM 12/28/2009
ENGR: JHM 12/28/2009
APPR:
FTR: 09-0377
DATE: 12/28/2009
SCALE: 1:15

NOTES: (UNLESS OTHERWISE SPECIFIED)
1. DIMENSIONS ARE IN INCHES, CONFORMING TO ASME Y14.5-1994. ALL DIMENSIONS APPLY AFTER FINISH.
2. DE-BURR AND BREAK ALL SHARP EDGES AND CORNERS TO R.015 MAX.
3. SURFACE TEXTURE/FINISH 64 RMS

TOLERANCES:
X.X ± .030
X.XX ± .010
X.XXX ± .005
ANGULAR ± 1/2°

eden CRYOGENICS
8445 RAUSCH DRIVE
PLAIN CITY, OH 43064
614.873.3949
www.edencryogenics.com

SIZE: B
DRAWING/PART NUMBER: BC-02128-5800-02
SHEET: 1 OF 3
REV: A

Information Copy

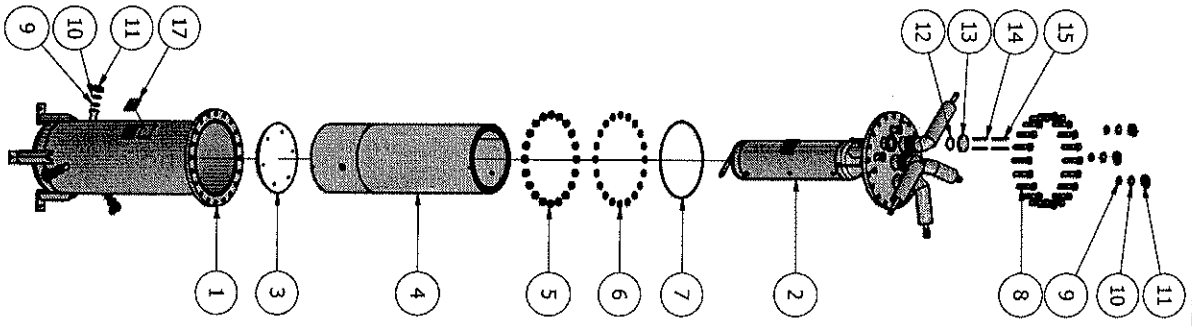

NOTES: (UNLESS OTHERWISE SPECIFIED)
1. DIMENSIONS ARE IN INCHES, CONFORMING TO ASME Y14.5-1994. ALL DIMENSIONS APPLY AFTER FINISH.
2. DE-BURR AND BREAK ALL SHARP EDGES AND CORNERS TO R.015 MAX.
3. SURFACE TEXTURE/FINISH 64 RMS

TOLERANCES:
X.X ±.030
X.XX ±.010
X.XXX ±.005
ANGULAR ± 1/2°

INFORMATION SHOWN ON THIS DRAWING IS PROPRIETARY AND THE SOLE PROPERTY OF EDEN CRYOGENICS, LLC AND IS NOT TO BE REPRODUCED, DISCLOSED OR TRANSMITTED TO OTHERS FOR ANY PURPOSE NOT AUTHORIZED BY EDEN CRYOGENICS, LLC.

eden CRYOGENICS
8445 RAUSCH DRIVE
PLAIN CITY, OH 43064
614.873.3949
www.edencryogenics.com

DWN: MAB 10/15/2009
CHKR: JHM 12/28/2009
ENGR: JHM 12/28/2009
APPR:
LUN: 09-0377
DATE: 12/28/2009
SCALE: 1:40

ZONE	REV	DATE	CHANGED BY	ECN	REVISION DESCRIPTION

SIZE	DRAWING/PART NUMBER	SHEET	REV
B	BC-02128-5800-02	2 OF 3	-

TITLE
BC-02128
ASSEMBLY, LIQUID ARGON TPC PURITY DEMO PURIFIER VESSEL

Information Copy

Information Copy
V3.10.15 105 / 424

PARTS LIST

ITEM	ITEM QTY	PART NUMBER	DESCRIPTION	STOCK NUMBER	MATERIAL
1	1	BC-02128-5810	WELDMENT, VACUUM VESSEL		Welded Stainless Steel 304/304L
2	1	BC-02128-5815	FINAL ASSEMBLY, LAR PRESSURE VESSEL W/ PORTS		Welded Stainless Steel 304/304L
3	1	BC-02128-5890	ASSEMBLY, HEAT SHIELDS, BOTTOM		
4	1	BC-02128-5900	ASSEMBLY, HEAT SHIELDS, SIDE		
5	20	FA-020-812-006	HEX NUT, INCH, 1 1/4-7 UNC		Stainless Steel 304/304L ASTM A194 GR 8
6	20	FA-020-812-030	SPRING LOCK WASHER, 1 1/4		Stainless Steel 18-8
7	1	HW-001-001-474	VITON O-RING	2-474	Viton
8	20	FA-020-112-326	HEX BOLT, INCH, 1 1/4-7 UNC X 6 LG		Stainless Steel 304/304L ASTM A193 GR B8
9	6	710003	CENTERING RING, MDC VACUUM PRODUCTS		
10	6	712003	FLANGE, BLANK, NW50, MDC VACUUM PRODUCTS		Stainless Steel 304/304L
11	6	701003	CLAMP, HINGED, MDC VACUUM PRODUCTS		
12	1	HW-001-001-241	VITON O-RING	2-241	Viton
13	1	BC-02128-0103	PARALLEL PLATE RELIEF, TOP PLATE		Stainless Steel 304/304L ASTM A240
14	4	BC-02128-0104	LIFT PLATE, SPRING	9663K56	Stainless Steel 302
15	4	BC-02128-0105	SHOULDER SCREW, 5/16 Ø X 3 1/2, 1/4-20 UNC	90298A597	Stainless Steel 18-8
16	3	BC-02128-5920	SHIPPING PLUG		
17	1	BC-02128-1705	LABEL, CODED VESSEL, DUPLICATE	LB-003-000-001	Stainless Steel 304/304L

VESSEL TAGS

SERIAL NO.	PRESSURE VESSEL LABEL	DUPLICATE LABEL	VACUUM VESSEL LABEL
02128-02	BC-02128-1702	BC-02128-1705	BC-02128-1708

NOTES: (UNLESS OTHERWISE SPECIFIED)
1. DIMENSIONS ARE IN INCHES, CONFORMING TO ASME Y14.5 1994.
ALL DIMENSIONS APPLY AFTER FINISH.
2. DE-BURR AND BREAK ALL SHARP EDGES AND CORNERS TO R .015 MAX.
3. SURFACE TEXTURE/FINISH 64 RMS

TOLERANCES:
X.X ± .030
X.XX ± .010
X.XXX ± .005
ANGULAR ± 1/2°

eden CRYOGENICS LLC
8445 RAUSCH DRIVE
PLAIN CITY, OH 43064
614.873.3949
www.edencryogenics.com

DWN: MAB 10/15/2009
CHK: JHM 12/28/2009
ENG: JHM 12/28/2009
APPR:

INFORMATION SHOWN ON THIS DRAWING IS PROPRIETARY AND THE SOLE PROPERTY OF EDEN CRYOGENICS, LLC AND IS NOT TO BE REPRODUCED, DISCLOSED OR TRANSMITTED TO OTHERS OR USED FOR ANY PURPOSE NOT AUTHORIZED BY EDEN CRYOGENICS, LLC.

REV	ZONE	DATE	BY	CHK	DESCRIPTION
B4	A	5/22/2010	MAB	10-0314	2. ADDED ITEM 17: LABEL PART NO. BC-02128-1705.
A4	A	5/22/2010	MAB	10-0314	1. ADDED VESSEL TAGS TABLE.

TITLE: BC-02128
ASSEMBLY, LIQUID ARGON TPC PURITY DEMO PURIFIER VESSEL

EDR: 09-0377
DATE: 12/28/2009
SCALE:

SIZE B
DRAWING/PART NUMBER BC-02128-5800-02
SHEET 3 of 3
REV A

Information Copy

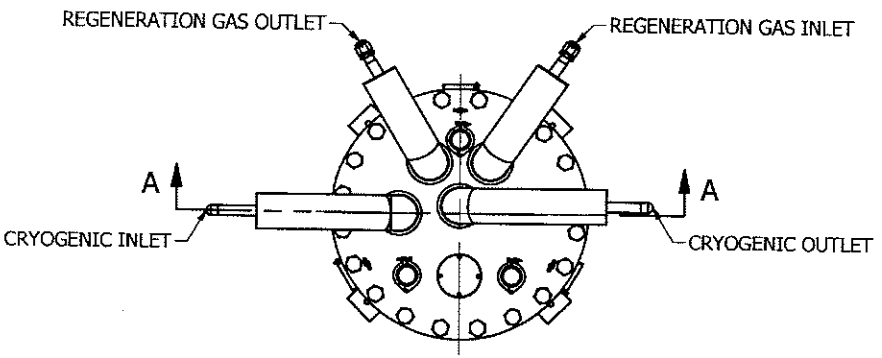

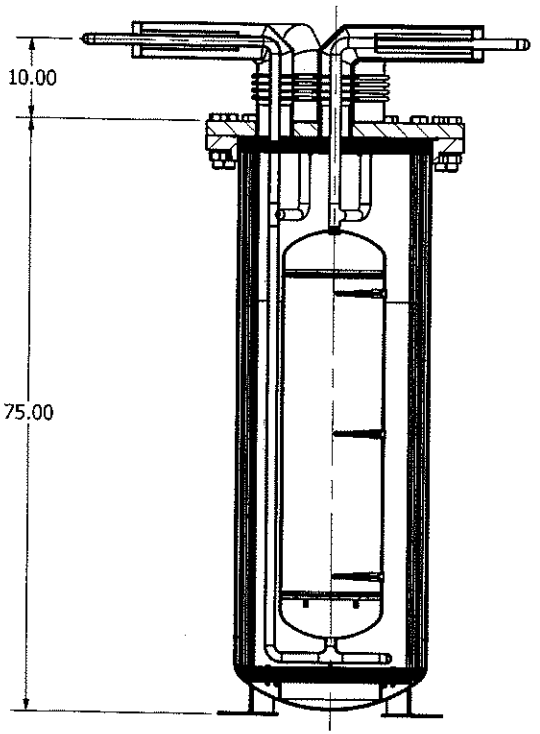

SECTION A-A
SCALE 1 : 15

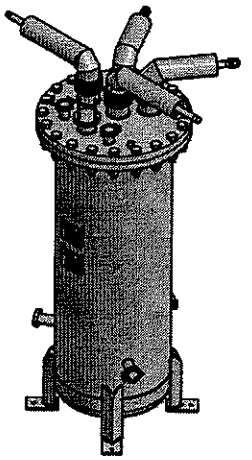

SCALE 1 : 25

REV STATUS	
SH	REV
1	A
2	-
3	A

NOTE:

1. BREAK ALL SHARP EDGES AND CORNERS TO R.005.
2. MASS SPEC. OUTER VESSEL PER EDEN CRYOGENICS SPEC. BC-101-070-001.
3. PRESSURE INNER VESSEL AND PIPING TO 1 PSI WITH NITROGEN.
4. PRIOR TO SHIPMENT, INSTALL SHIPPING PLUGS BC-02128-5920.

ZONE	REV	DATE	CHANGED BY	REVISION DESCRIPTION
	A	6/22/2010	MAB	10-0214 SEE SHEET 3 FOR REV A.

TITLE: BC-02128
ASSEMBLY, LIQUID ARGON TPC PURITY DEMO PURIFIER VESSEL

INFORMATION SHOWN ON THIS DRAWING IS PROPRIETARY TO THE SOLE PROPERTY OF EDEN CRYOGENICS, LLC AND IS NOT TO BE REPRODUCED, DISCLOSED OR TRANSMITTED TO OTHERS FOR ANY PURPOSE NOT AUTHORIZED BY EDEN CRYOGENICS, LLC.

NOTES: (UNLESS OTHERWISE SPECIFIED)
1. DIMENSIONS ARE IN INCHES, CONFORMING TO ASME Y14.5-1994. ALL DIMENSIONS APPLY AFTER FINISH.
2. DE-BURR AND BREAK ALL SHARP EDGES AND CORNERS TO R.015 MAX.
3. SURFACE TEXTURE/FINISH 64 RMS

TOLERANCES:
X.X ± .030
X.XX ± .010
X.XXX ± .005
ANGULAR ± 1/2°

eden CRYOGENICS
8445 RAUSCH DRIVE
PLAIN CITY, OH 43064
614.873.3949
www.edencryogenics.com

DWN:	MAB	10/15/2009
CHKD:	JHM	12/28/2009
ENGR:	JHM	12/28/2009
APPR:		

CDR: 09-0377
DATE: 12/28/2009
SCALE: 1:15

SIZE	DRAWING/PART NUMBER	SHEET	REV
B	BC-02128-5800-03	1 OF 3	A

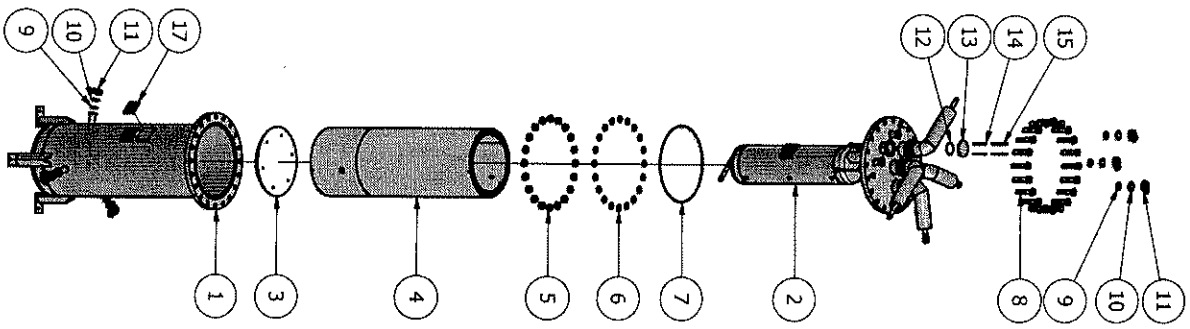

NOTES: (UNLESS OTHERWISE SPECIFIED)
1. DIMENSIONS ARE IN INCHES, CONFORMING TO ASME Y14.5-1994. ALL DIMENSIONS APPLY AFTER FINISH.
2. DE-BURR AND BREAK ALL SHARP EDGES AND CORNERS TO R.015 MAX.
3. SURFACE TEXTURE/FINISH 64 RMS

TOLERANCES:
X.X ±.030
X.XX ±.010
X.XXX ±.005
ANGULAR ± 1/2°

INFORMATION SHOWN ON THIS DRAWING IS PROPRIETARY AND THE SOLE PROPERTY OF EDEN CRYOGENICS, LLC AND IS NOT TO BE REPRODUCED, DISCLOSED OR TRANSMITTED TO OTHERS FOR ANY PURPOSE NOT AUTHORIZED BY EDEN CRYOGENICS, LLC.

eden CRYOGENICS
8445 RAUSCH DRIVE
PLAIN CITY, OH 43064
614.873.3949
www.edencryogenics.com

DWN: MAB 10/15/2009
CHKR: JHM 12/28/2009
ENGR: JHM 12/28/2009
APPR:
EDR: 09-0377
DATE: 12/28/2009
SCALE: 1:40

ZONE	REV	DATE	CHANGED BY	EDR	REVISION DESCRIPTION
	-				

SIZE	DRAWING/PART NUMBER	SHEET	REV
B	BC-02128-5800-03	2 OF 3	-

TITLE
BC-02128
ASSEMBLY, LIQUID ARGON TPC PURITY DEMO PURIFIER VESSEL

Information Copy

Information Copy

PARTS LIST					
ITEM	ITEM QTY	PART NUMBER	DESCRIPTION	STOCK NUMBER	MATERIAL
1	1	BC-02128-5810	WELDMENT, VACUUM VESSEL		Welded Stainless Steel 304/304L
2	1	BC-02128-5815	FINAL ASSEMBLY, LAR PRESSURE VESSEL W/ PORTS		Welded Stainless Steel 304/304L
3	1	BC-02128-5890	ASSEMBLY, HEAT SHIELDS, BOTTOM		
4	1	BC-02128-5900	ASSEMBLY, HEAT SHIELDS, SIDE		
5	20	FA-020-812-006	HEX NUT, INCH, 1 1/4-7 UNC		Stainless Steel 304/304L ASTM A194 GR 8
6	20	FA-020-812-030	SPRING LOCK WASHER, 1 1/4		Stainless Steel 18-8
7	1	HW-001-001-474	VITON O-RING	2-474	Viton
8	20	FA-020-112-326	HEX BOLT, INCH, 1 1/4-7 UNC X 6 LG		Stainless Steel 304/304L ASTM A193 GR B8
9	6	710003	CENTERING RING, MDC VACUUM PRODUCTS		
10	6	712003	FLANGE, BLANK, NW50, MDC VACUUM PRODUCTS		Stainless Steel 304/304L
11	6	701003	CLAMP, HINGED, MDC VACUUM PRODUCTS		
12	1	HW-001-001-241	VITON O-RING	2-241	Viton
13	1	BC-02128-0103	PARALLEL PLATE RELIEF, TOP PLATE		Stainless Steel 304/304L ASTM A240
14	4	BC-02128-0104	LIFT PLATE, SPRING	9663K56	Stainless Steel 302
15	4	BC-02128-0105	SHOULDER SCREW, 5/16 Ø X 3 1/2, 1/4-20 UNC	90298A597	Stainless Steel 18-8
16	3	BC-02128-5920	SHIPPING PLUG		
17	1	BC-02128-1706	LABEL, CODED VESSEL, DUPLICATE	LB-003-000-001	Stainless Steel 304/304L

A

A

VESSEL TAGS			
SERIAL NO.	PRESSURE VESSEL LABEL	DUPLICATE LABEL	VACUUM VESSEL LABEL
02128-03	BC-02128-1703	BC-02128-1706	BC-02128-1709

NOTES: (UNLESS OTHERWISE SPECIFIED)
1. DIMENSIONS ARE IN INCHES, CONFORMING TO ASME Y14.5-1994. ALL DIMENSIONS APPLY AFTER FINISH.
2. DE-BURR AND BREAK ALL SHARP EDGES AND CORNERS TO 0.015 MAX.
3. SURFACE TEXTURE/FINISH 64 RMS

TOLERANCES:
X.X ± .030
X.XX ± .010
X.XXX ± .005
ANGULAR ± 1/2°

eden CRYOGENICS
8445 RAUSCH DRIVE
PLAIN CITY, OH 43064
614.873.3949
www.edencryogenics.com

INFORMATION SHOWN ON THIS DRAWING IS PROPRIETARY AND THE SOLE PROPERTY OF EDEN CRYOGENICS, LLC AND IS NOT TO BE REPRODUCED, DISTRIBUTED OR TRANSMITTED TO OTHERS FOR ANY PURPOSE NOT AUTHORIZED BY EDEN CRYOGENICS, LLC.

DWN: MAB 10/15/2009
CHKD: JHM 12/28/2009
ENGR: JHM 12/28/2009
APPR:
EDR: 09-0377
DATE: 12/28/2009
SCALE:

ZONE	REV	DATE	CHANGED BY	REVISION DESCRIPTION
B4	A	6/22/2010	MAB	10-0114 2: ADDED ITEM 17: LABEL PART NO. BC-02128-1706.
A4	A	6/22/2010	MAB	10-0114 1: ADDED VESSEL TAGS TABLE.

TITLE
BC-02128
ASSEMBLY, LIQUID ARGON TPC PURITY DEMO PURIFIER VESSEL

SIZE B
DRAWING/PART NUMBER BC-02128-5800-03
SHEET 3 OF 3
REV A

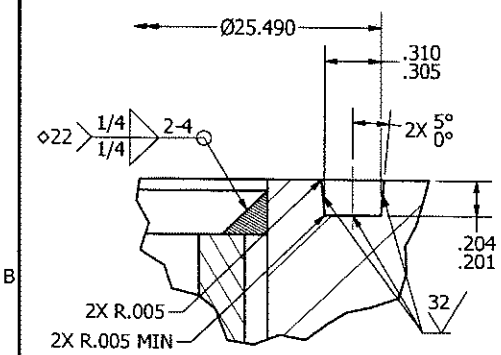

DETAIL B
SCALE 3 : 2

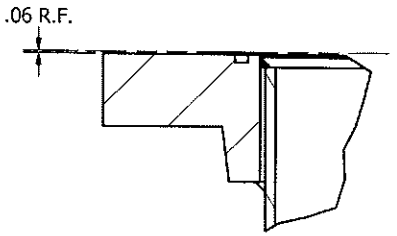

DETAIL C
SCALE 1 : 3

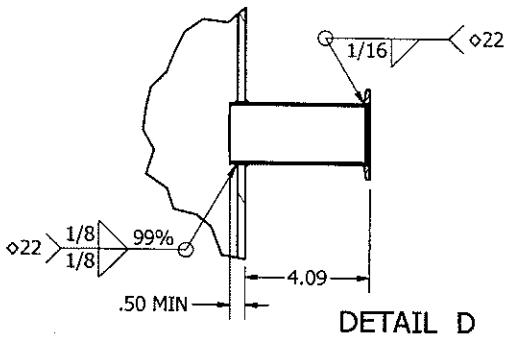

DETAIL D
SCALE 1 : 4

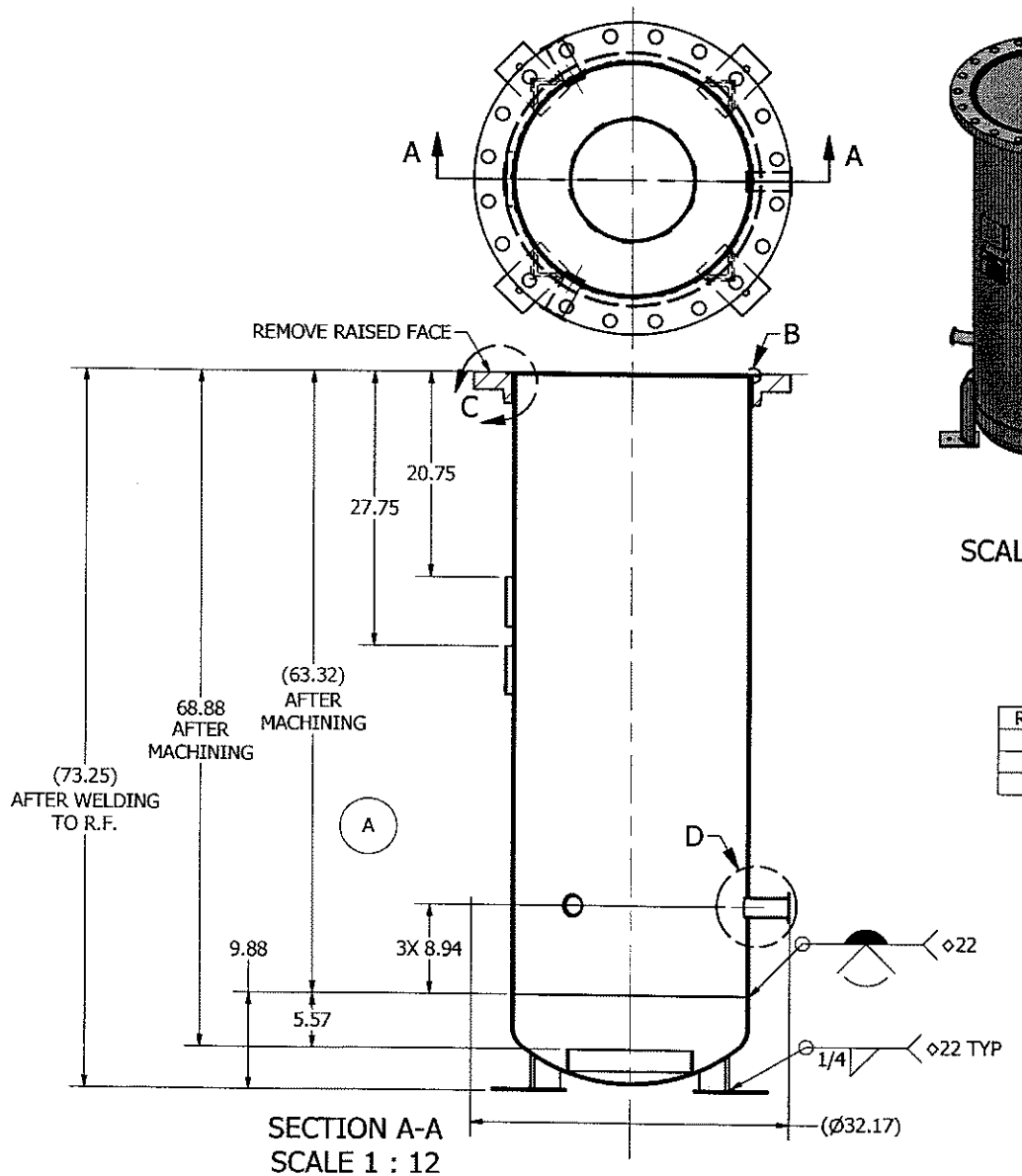

SECTION A-A
SCALE 1 : 12

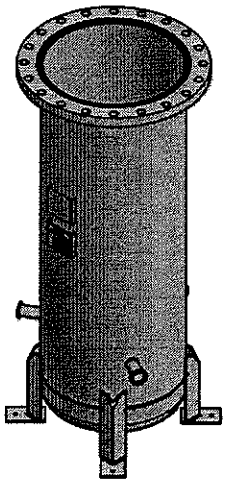

SCALE 1 : 20

REV STATUS	
SH	REV
1	B
2	B

REV	DATE	CHANGED BY	REVISION DESCRIPTION
B	6/22/2010	MAB	10-0214 : SEE SHEET 2 FOR REV B.
A	3/14/2010	MAL	10-0014 : ADDED 20.75, & 27.75 DIMS.
A	3/12/2010	MAB	10-0073 : L: 68.88, 9.88, 5.57 & 3.94; WAS 69.25, 10.88, 6.94 & 8.00.

BC-02128
WELDMENT, VACUUM VESSEL

NOTES: (UNLESS OTHERWISE SPECIFIED)
1. DIMENSIONS ARE IN INCHES, CONFORMING TO ASME Y14.5-1994. ALL DIMENSIONS APPLY AFTER FINISH.
2. DE-BURR AND BREAK ALL SHARP EDGES AND CORNERS TO 0.015 MAX.
3. SURFACE TEXTURE/FINISH: 64 RMS

TOLERANCES:
X.X ± .030
X.XX ± .010
X.XXX ± .005
ANGULAR ± 1/2°

INFORMATION SHOWN ON THIS DRAWING IS PROPRIETARY AND THE SOLE PROPERTY OF EDEN CRYOGENICS, LLC AND IS NOT TO BE REPRODUCED OR DISCLOSED TO OTHERS OR TRANSMITTED TO OTHERS FOR ANY PURPOSE NOT AUTHORIZED BY EDEN CRYOGENICS, LLC.

eden CRYOGENICS
8445 RAUSCH DRIVE
PLAIN CITY, OH 43064
614.873.3949
www.edencryogenics.com

DWN: MAB 10/15/2009
CHKD: JHM 12/28/2009
ENGR: JHM 12/28/2009
APPR:
EDR: 09-0377
DATE: 12/28/2009
SCALE: 1:15

SIZE B | DRAWING/PART NUMBER BC-02128-5810-01 | SHEET 1 OF 2 | REV B

Information Copy
v3.10.15 109 / 424

PARTS LIST					
ITEM	ITEM QTY	PART NUMBER	DESCRIPTION	STOCK NUMBER	MATERIAL
1	4	BC-02128-0044	OUTER VESSEL, FEET		Stainless Steel 304/304L ASME SA240
2	4	BC-02128-0049	OUTER VESSEL, ANGLE SUPPORT, 3 X 3 X 3/8 THK		Stainless Steel 304/304L ASME SA276
3	1	BC-02128-0045	WELD CAP, 24 NPS X SCH 10		Stainless Steel 304/304L ASME SA182
4	1	BC-02128-0039	SUPPORT, HEAT SHIELD, 12 NPS X SCH 10	PI-192-010-021	Stainless Steel 304/304L ASME SA312
5	1	BC-02128-0043	VACUUM VESSEL, PIPE, 24 NPS X SCH 10	PI-384-010-021	Stainless Steel 304/304L ASME SA312
6	1	FL-384-150-001	FLANGE, SLIP-ON RAISED FACE, 150#, 24 NPS		Stainless Steel 304/304L
7	3	713022	FLANGE, WELD, NW50, MDC VACUUM PRODUCTS		Stainless Steel 304/304L
8	3	BC-02128-0111	PASS-THRU, TUBE, 2 OD X .065 WALL X 4 5/8 LG	TU-032-065-031	Stainless Steel 304/304L ASTM A269
9	2	LB-003-001-020	VESSEL BRACKET, CODED LABEL		Stainless Steel 304/304L ASME SA240
10	1	BC-02128-1707	LABEL, CODED VESSEL, VACUUM VESSEL	LB-003-000-001	Stainless Steel 304/304L

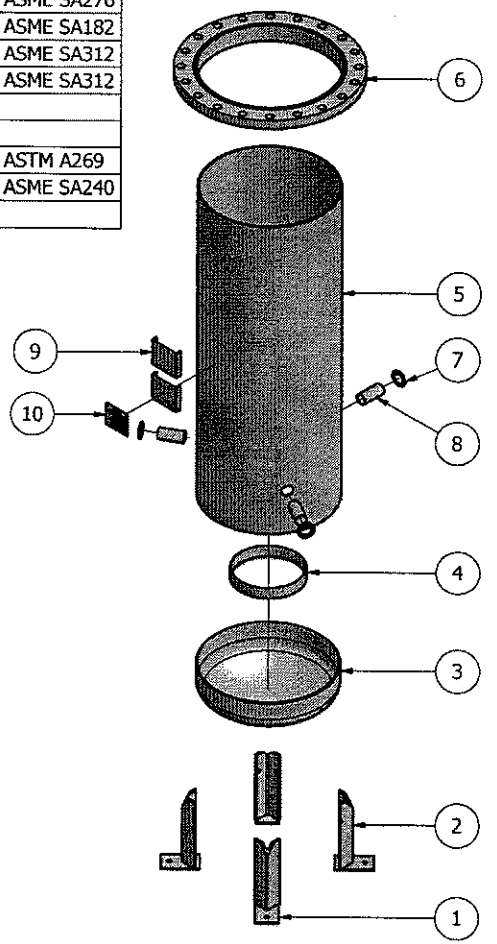

NOTE:

1. BREAK ALL SHARP EDGES AND CORNERS TO R.005.
2. DRAWING IS FOR VACUUM VESSEL -01.
3. MATERIAL CERTS REQUIRED ON ALL ITEMS. (DELIVER TO PROJECT ENGINEER).
4. PRE-CLEAN ALL SURFACES PRIOR TO FABRICATION PER SPEC. BC-101-052-010 SECTIONS 11.0.
   4.1. FINAL CLEANING SHALL BE PERFORMED USING ETHYL ALCOHOL & A LINT FREE CLOTH.
5. "◇22" WELD PER EDEN SPEC BC101-001-022, LATEST REV.
6. PASSIVATE ALL WELDS.
7. MASS SPEC. PER EDEN CRYOGENICS SPEC. BC-101-070-001.
8. INSPECT INNER SURFACES WITH ULTRA VIOLET LIGHT PER EDEN SPEC. BC-101-052-010, SECTION 13.2.
9. CERTIFIED TEST REPORTS AND TEST RECORD/DATA SHEETS SHALL BE PROVIDED TO THE PROJECT ENGINEER FOR THE FOLLOWING TESTS:
   9.1. MASS SPEC. PER EDEN CRYOGENICS SPEC. BC-101-070-001.

NOTES: (UNLESS OTHERWISE SPECIFIED)
1. DIMENSIONS ARE IN INCHES, CONFORMING TO ASME Y14.5-1994. ALL DIMENSIONS APPLY AFTER FINISH.
2. DE-BURR AND BREAK ALL SHARP EDGES AND CORNERS TO R.005 MAX.
3. SURFACE TEXTURE/FINISH 64 RMS

TOLERANCES:
X.X ± .030
X.XX ± .010
X.XXX ± .005
ANGULAR ± 1/2°

DISTRIBUTION OF THIS DRAWING OR THE DRAWING IS PROHIBITED WITHOUT WRITTEN CONSENT OF THE SOLE PROPERTY OF EDEN CRYOGENICS, LLC AND IS NOT TO BE REPRODUCED OR DISCLOSED OR TRANSMITTED TO OTHERS FOR ANY PURPOSE NOT AUTHORIZED BY EDEN CRYOGENICS, LLC.

eden CRYOGENICS
8445 RAUSCH DRIVE
PLAIN CITY, OH 43064
614.873.3949
www.edencryogenics.com

DWN: MAB 10/15/2009
CHKD: JHM 12/28/2009
ENGR: JHM 12/28/2009
APPR:
EDR: 09-0377
DATE: 12/28/2009
SCALE: 1:25

ZONE	REV	DATE	CHANGED BY	REVISION DESCRIPTION
B4	B	6/22/2010	MAB	10-0214 ADDED ITEM 10: LABEL PART NO. BC-02128-1707.
A3	A	3/12/2010	MAB	10-0073 NOTE 2.1.-01, WAS FOR -01, -02 & -03.

TITLE
BC-02128
WELDMENT, VACUUM VESSEL

SIZE B
DRAWING/PART NUMBER BC-02128-5810-01
SHEET 2 of 2
REV B

Information Copy

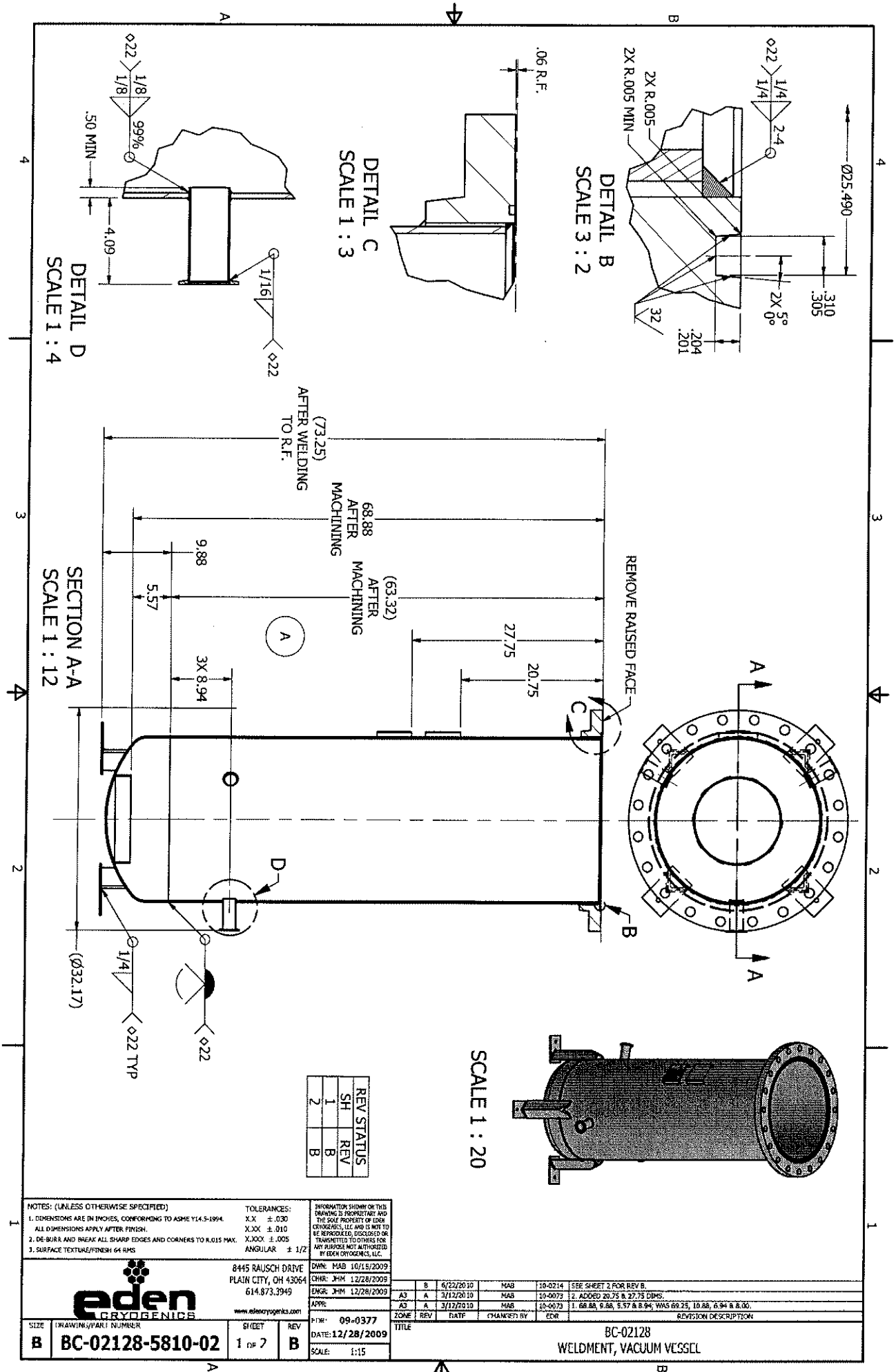

Information Copy

PARTS LIST					
ITEM	ITEM QTY	PART NUMBER	DESCRIPTION	STOCK NUMBER	MATERIAL
1	4	BC-02128-0044	OUTER VESSEL, FEET		Stainless Steel 304/304L ASME SA240
2	4	BC-02128-0049	OUTER VESSEL, ANGLE SUPPORT, 3 X 3 X 3/8 THK		Stainless Steel 304/304L ASME SA276
3	1	BC-02128-0045	WELD CAP, 24 NPS X SCH 10		Stainless Steel 304/304L ASME SA182
4	1	BC-02128-0039	SUPPORT, HEAT SHIELD, 12 NPS X SCH 10	PI-192-010-021	Stainless Steel 304/304L ASME SA312
5	1	BC-02128-0043	VACUUM VESSEL, PIPE, 24 NPS X SCH 10	PI-384-010-021	Stainless Steel 304/304L ASME SA312
6	1	FL-384-150-001	FLANGE, SLIP-ON RAISED FACE, 150#, 24 NPS		Stainless Steel 304/304L
7	3	713022	FLANGE, WELD, NW50, MDC VACUUM PRODUCTS		Stainless Steel 304/304L
8	3	BC-02128-0111	PASS-THRU, TUBE, 2 OD X .065 WALL X 4 5/8 LG	TU-032-065-031	Stainless Steel 304/304L ASTM A269
9	2	LB-003-001-020	VESSEL BRACKET, CODED LABEL		Stainless Steel 304/304L ASME SA240
10	1	BC-02128-1708	LABEL, CODED VESSEL, VACUUM VESSEL	LB-003-000-001	Stainless Steel 304/304L

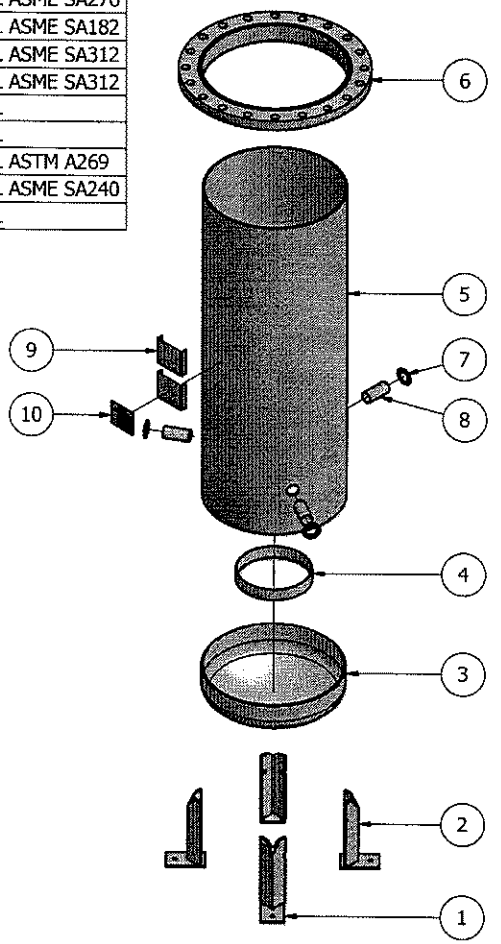

NOTE:

1. BREAK ALL SHARP EDGES AND CORNERS TO R.005.
2. DRAWING IS FOR VACUUM VESSEL -02.
3. MATERIAL CERTS REQUIRED ON ALL ITEMS. (DELIVER TO PROJECT ENGINEER).
4. PRE-CLEAN ALL SURFACES PRIOR TO FABRICATION PER SPEC. BC-101-052-010 SECTIONS 11.0.
   4.1. FINAL CLEANING SHALL BE PERFORMED USING ETHYL ALCOHOL & A LINT FREE CLOTH.
5. "◇22" WELD PER EDEN SPEC BC101-001-022, LATEST REV.
6. PASSIVATE ALL WELDS.
7. MASS SPEC. PER EDEN CRYOGENICS SPEC. BC-101-070-001.
8. INSPECT INNER SURFACES WITH ULTRA VIOLET LIGHT PER EDEN SPEC. BC-101-052-010, SECTION 13.2.
9. CERTIFIED TEST REPORTS AND TEST RECORD/DATA SHEETS SHALL BE PROVIDED TO THE PROJECT ENGINEER FOR THE FOLLOWING TESTS:
   9.1. MASS SPEC. PER EDEN CRYOGENICS SPEC. BC-101-070-001.

NOTES: (UNLESS OTHERWISE SPECIFIED)
1. DIMENSIONS ARE IN INCHES, CONFORMING TO ASME Y14.5-1994. ALL DIMENSIONS APPLY AFTER FINISH.
2. DE-BURR AND BREAK ALL SHARP EDGES AND CORNERS TO R.015 MAX.
3. SURFACE TEXTURE/FINISH 64 RMS

TOLERANCES:
X.X ± .030
X.XX ± .010
X.XXX ± .005
ANGULAR ± 1/2°

INFORMATION SHOWN ON THIS DRAWING IS PROPRIETARY AND THE SOLE PROPERTY OF EDEN CRYOGENICS, LLC AND IS NOT TO BE REPRODUCED, DISCLOSED OR TRANSMITTED TO OTHERS FOR ANY PURPOSE NOT AUTHORIZED BY EDEN CRYOGENICS, LLC.

eden CRYOGENICS
8445 RAUSCH DRIVE
PLAIN CITY, OH 43064
614.873.3949
www.edencryogenics.com

DWN: MAB 10/15/2009
CHKR: JHM 12/28/2009
ENGR: JHM 12/28/2009
APPR:
CDR: 09-0377
DATE: 12/28/2009
SCALE: 1:25

ZONE	REV	DATE	REVISION DESCRIPTION
B4	B	6/22/2010	MAB 10-0214 ADDED ITEMS 10: LABEL, PART NO. BC-02128-1708.
A3	A	3/12/2010	MAB 10-0073 NOTE 2.: -02, WAS FOR -01, -02 & -03.
			CHANGED BY: CDR

TITLE
BC-02128
WELDMENT, VACUUM VESSEL

SIZE: B
DRAWING/PART NUMBER: BC-02128-5810-02
SHEET: 2 OF 2
REV: B

Information Copy
v3.10.15 112 / 424

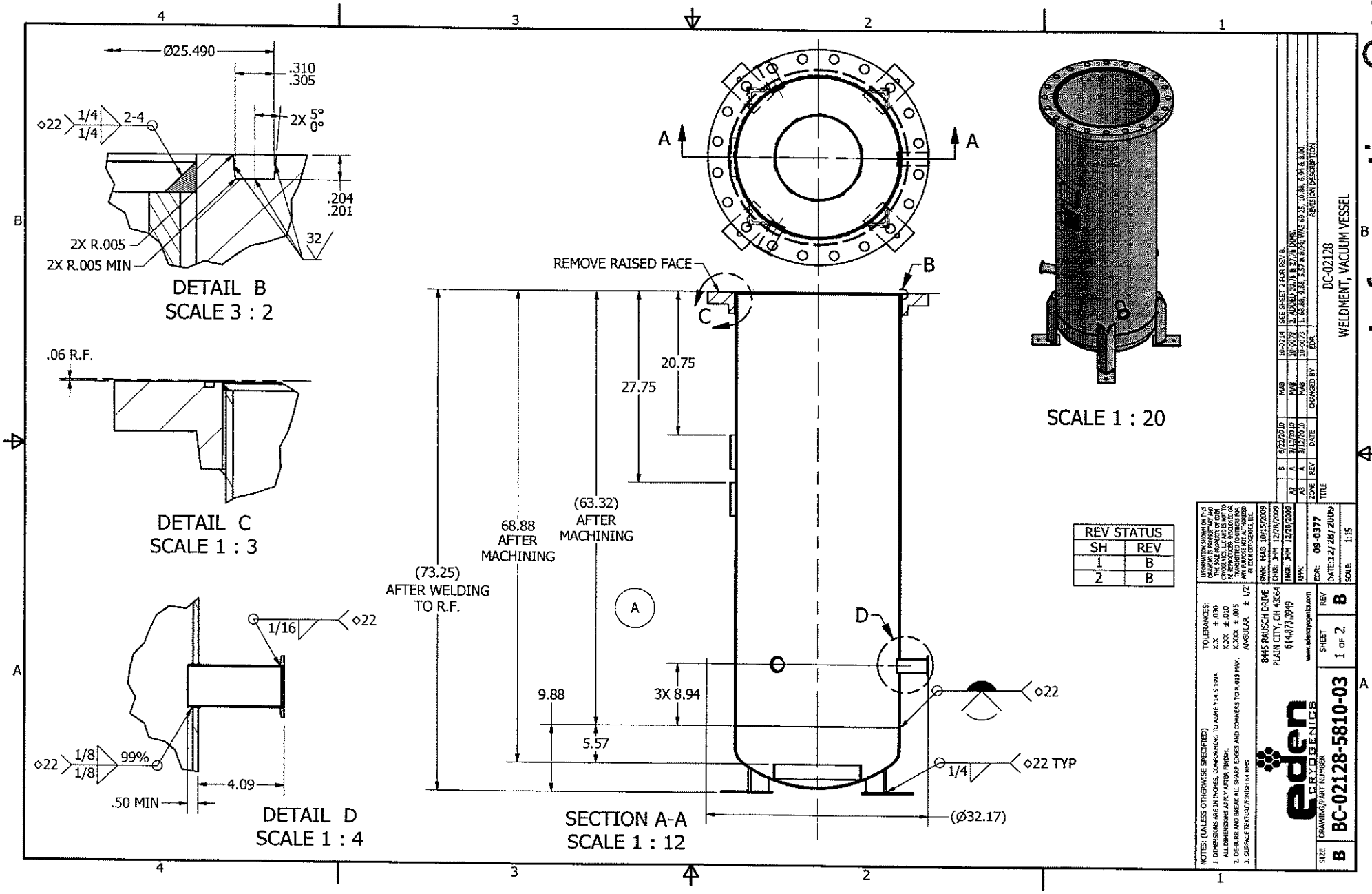
Ø25.490
.310
.305
2X 5°
0°
◇22 1/4 1/4 2-4
.204
.201
32
2X R.005
2X R.005 MIN
DETAIL B
SCALE 3 : 2
.06 R.F.
DETAIL C
SCALE 1 : 3
1/16
◇22
◇22 1/8 1/8 99%
4.09
.50 MIN
DETAIL D
SCALE 1 : 4
A
A
REMOVE RAISED FACE
B
C
D
20.75
27.75
(63.32)
AFTER
MACHINING
68.88
AFTER
MACHINING
(73.25)
AFTER WELDING
TO R.F.
9.88
3X 8.94
5.57
◇22
1/4
◇22 TYP
(Ø32.17)
SECTION A-A
SCALE 1 : 12
SCALE 1 : 20
REV STATUS
SH REV
1 B
2 B
NOTES: (UNLESS OTHERWISE SPECIFIED)
1. DIMENSIONS ARE IN INCHES, CONFORMING TO ASME Y14.5-1994.
ALL DIMENSIONS APPLY AFTER FINISH.
2. DEBURR AND BREAK ALL SHARP EDGES AND CORNERS TO R.015 MAX.
3. SURFACE TEXTURE/FINISH 64 RMS
TOLERANCES:
X.X ± .030
X.XX ± .010
X.XXX ± .005
ANGULAR ± 1/2
8445 RAUSCH DRIVE
PLAIN CITY, OH 43064
614.873.3949
www.edencryogenics.com
eden CRYOGENICS
SIZE B
DRAWING/PART NUMBER BC-02128-5810-03
SHEET 1 OF 2
REV B
DWN: MAB 10/15/2009
CHKD: JHM 12/28/2009
MFG: JHM 12/28/2009
APPR:
CDR: 09-0377
DATE: 12/28/2009
SCALE: 1:15
ZONE REV DATE CHANGED BY REVISION DESCRIPTION
A2 B 5/22/2010 MAB 10-0214 SEE SHEET 2 FOR REV B.
A3 A 3/12/2010 MAB 10-0079 2. ADDED DIM. A & B 27.75 & 10.94.
3/12/2010 MAB 10-0073 1. 68.88, 9.88, 5.57 & 8.94, WAS 69.25, 10.88, 6.94 & 8.00.
TITLE
DC-02128
WELDMENT, VACUUM VESSEL
Information Copy
v3.10.15 113 / 424

Information Copy

PARTS LIST					
ITEM	ITEM QTY	PART NUMBER	DESCRIPTION	STOCK NUMBER	MATERIAL
1	4	BC-02128-0044	OUTER VESSEL, FEET		Stainless Steel 304/304L ASME SA240
2	4	BC-02128-0049	OUTER VESSEL, ANGLE SUPPORT, 3 X 3 X 3/8 THK		Stainless Steel 304/304L ASME SA276
3	1	BC-02128-0045	WELD CAP, 24 NPS X SCH 10		Stainless Steel 304/304L ASME SA182
4	1	BC-02128-0039	SUPPORT, HEAT SHIELD, 12 NPS X SCH 10	PI-192-010-021	Stainless Steel 304/304L ASME SA312
5	1	BC-02128-0043	VACUUM VESSEL, PIPE, 24 NPS X SCH 10	PI-384-010-021	Stainless Steel 304/304L ASME SA312
6	1	FL-384-150-001	FLANGE, SLIP-ON RAISED FACE, 150#, 24 NPS		Stainless Steel 304/304L
7	3	713022	FLANGE, WELD, NW50, MDC VACUUM PRODUCTS		Stainless Steel 304/304L
8	3	BC-02128-0111	PASS-THRU, TUBE, 2 OD X .065 WALL X 4 5/8 LG	TU-032-065-031	Stainless Steel 304/304L ASTM A269
9	2	LB-003-001-020	VESSEL BRACKET, CODED LABEL		Stainless Steel 304/304L ASME SA240
10	1	BC-02128-1709	LABEL, CODED VESSEL, VACUUM VESSEL	LB-003-000-001	Stainless Steel 304/304L

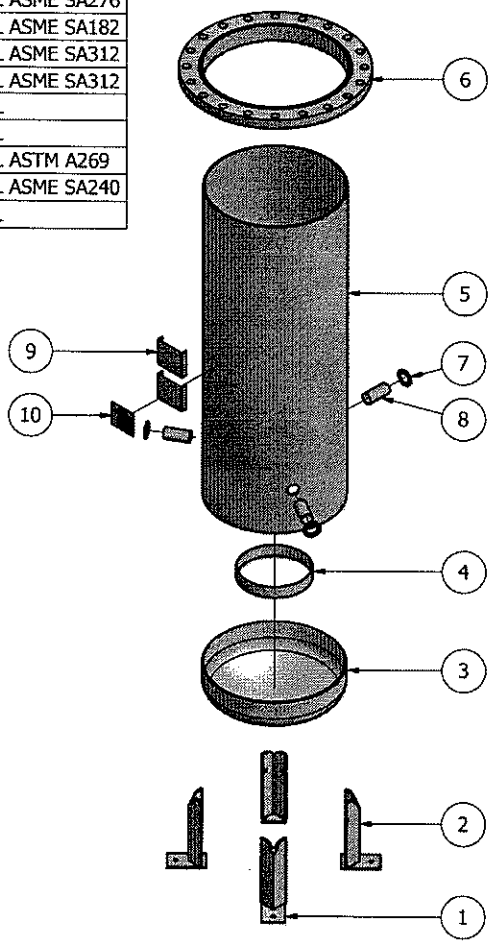

NOTE:

1. BREAK ALL SHARP EDGES AND CORNERS TO R.005.
2. DRAWING IS FOR VACUUM VESSEL -03.
3. MATERIAL CERTS REQUIRED ON ALL ITEMS. (DELIVER TO PROJECT ENGINEER).
4. PRE-CLEAN ALL SURFACES PRIOR TO FABRICATION PER SPEC. BC-101-052-010 SECTIONS 11.0.
   4.1. FINAL CLEANING SHALL BE PERFORMED USING ETHYL ALCOHOL & A LINT FREE CLOTH.
5. "◇22" WELD PER EDEN SPEC BC101-001-022, LATEST REV.
6. PASSIVATE ALL WELDS.
7. MASS SPEC. PER EDEN CRYOGENICS SPEC. BC-101-070-001.
8. INSPECT INNER SURFACES WITH ULTRA VIOLET LIGHT PER EDEN SPEC. BC-101-052-010, SECTION 13.2.
9. CERTIFIED TEST REPORTS AND TEST RECORD/DATA SHEETS SHALL BE PROVIDED TO THE PROJECT ENGINEER FOR THE FOLLOWING TESTS:
   9.1. MASS SPEC. PER EDEN CRYOGENICS SPEC. BC-101-070-001.

NOTES: (UNLESS OTHERWISE SPECIFIED)
1. DIMENSIONS ARE IN INCHES, CONFORMING TO ASME Y14.5-1994
ALL DIMENSIONS APPLY AFTER FINISH.
2. DE-BURR AND BREAK ALL SHARP EDGES AND CORNERS TO R.015 MAX.
3. SURFACE TEXTURE/FINISH 64 RMS

TOLERANCES:
X.X ± .030
X.XX ± .010
X.XXX ± .005
ANGULAR ± 1/2°

INFORMATION SHOWN ON THIS DRAWING IS PROPRIETARY AND THE SOLE PROPERTY OF EDEN CRYOGENICS, LLC AND IS NOT TO BE REPRODUCED, DISCLOSED OR TRANSMITTED TO OTHERS FOR ANY PURPOSE NOT AUTHORIZED BY EDEN CRYOGENICS, LLC.

eden CRYOGENICS
8445 RAUSCH DRIVE
PLAIN CITY, OH 43064
614.873.3949
www.edencryogenics.com

DWN: MAB 10/15/2009
CHK: JHM 12/28/2009
ENGR: JHM 12/28/2009
APPR:
EDR: 09-0377
DATE: 12/28/2009
SCALE: 1:25

ZONE	REV	DATE	CHANGED BY	REVISION DESCRIPTION
B4	B	5/22/2010	MAB	10-0214 ADDED ITEMS 10: LABEL PART NO. BC-02128-1709.
A3	A	3/12/2010	MAB	10-0673 NOTE 2.: -03, WAS FOR -01, -02 & -03.

TITLE
BC-02128
WELDMENT, VACUUM VESSEL

SIZE: B
DRAWING/PART NUMBER: BC-02128-5810-03
SHEET: 2 OF 2
REV: B

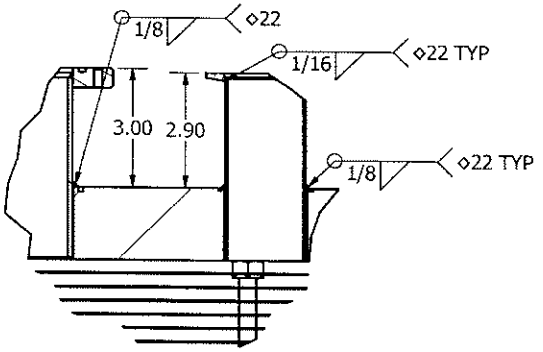

DETAIL C
SCALE 1 : 3

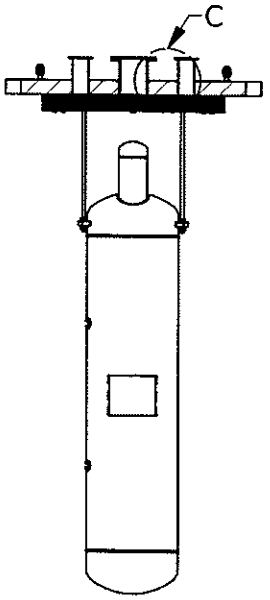

SECTION B-B
SCALE 1 : 15

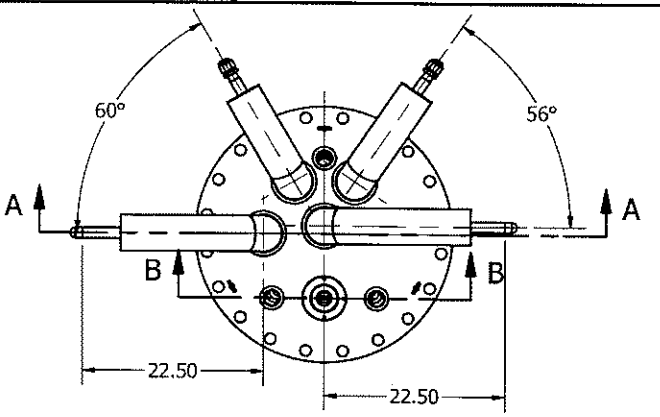

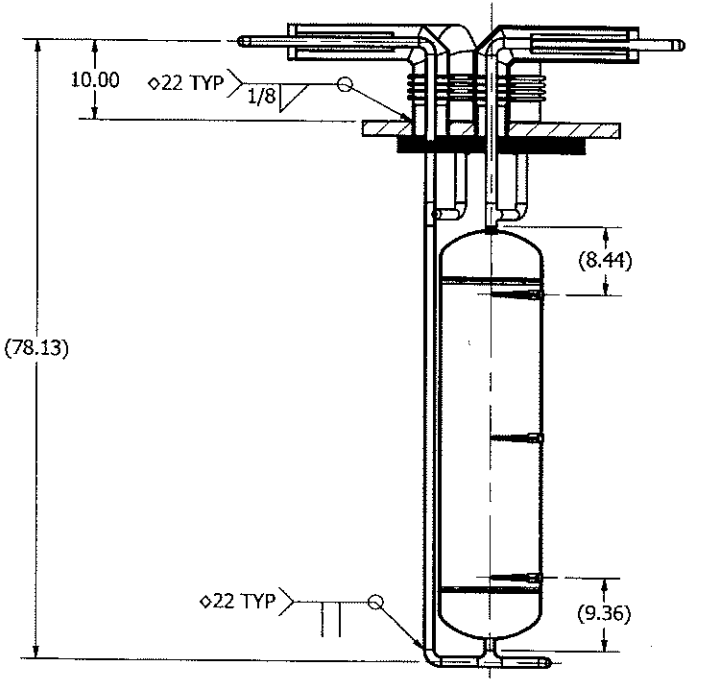

SECTION A-A
SCALE 1 : 15

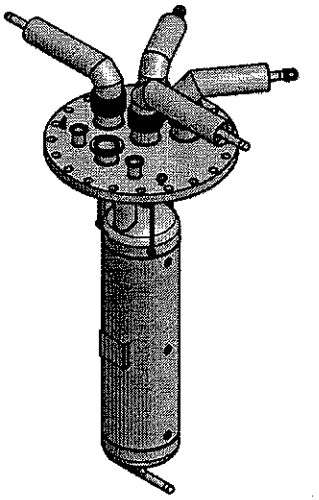

SCALE 1 : 20

REV STATUS	
SH	REV
1	-
2	-

ZONE	REV	DATE	CHANGED BY	REVISION DESCRIPTION
-	-	-	EDR	

TITLE: BC-02128
FINAL ASSEMBLY, LAR PRESSURE VESSEL W/ PORTS

INFORMATION SHOWN ON THIS DRAWING IS PROPRIETARY AND TRADE SECRET OF EDEN CRYOGENICS, LLC AND IS NOT TO BE REPRODUCED, DISCLOSED OR TRANSFERRED TO OTHERS FOR ANY PURPOSE WITHOUT WRITTEN CONSENT BY EDEN CRYOGENICS, LLC.

DWN: MAB 12/11/2009
CHKD: JHM 12/28/2009
ENGR: JHM 12/28/2009
APPR:

EDR#: 09-0377
DATE: 12/28/2009
SCALE: 1:15

NOTES: (UNLESS OTHERWISE SPECIFIED)
1. DIMENSIONS ARE IN INCHES, CONFORMING TO ASME Y14.5-1994. ALL DIMENSIONS APPLY AFTER FINISH.
2. DE BURR AND BREAK ALL SHARP EDGES AND CORNERS TO R.015 MAX.
3. SURFACE TEXTURE/FINISH 64 RMS

TOLERANCES:
X.X ±.030
X.XX ±.010
X.XXX ±.005
ANGULAR ± 1/2°

eden CRYOGENICS
8445 RAUSCH DRIVE
PLAIN CITY, OH 43064
614.873.3949
www.edencryogenics.com

SIZE: B
DRAWING/PART NUMBER: BC-02128-5815
SHEET: 1 OF 2
REV: -

Information Copy

PARTS LIST					
ITEM	ITEM QTY	PART NUMBER	DESCRIPTION	STOCK NUMBER	MATERIAL
1	1	BC-02128-5820	WELDMENT, LAR PRESSURE VESSEL		Welded Stainless Steel 304/304L
2	9	FA-008-812-006	HEX NUT - INCH 1/2 - 13 UNC		Stainless Steel 304/304L ASTM A194 GR 8
3	3	BC-02128-0123	ROD, ALL THREAD, 1/2-13 UNC X 18 LG	91187A548	Stainless Steel 304/304L ASTM A193 GR B8
4	1	BC-02128-5910	ASSEMBLY, HEAT SHIELDS, TOP		
5	1	BC-02128-0040	OUTER VESSEL, TOP FLANGE	FL-384-150-005	Viton
6	3	BC-02128-0111	PASS-THRU, TUBE, 2 OD X .065 WALL X 4 5/8 LG	TU-032-065-031	Stainless Steel 304/304L ASTM A269
7	3	713022	FLANGE, WELD, NW50, MDC VACUUM PRODUCTS		Stainless Steel 304/304L
8	1	BC-02128-5875	WELDMENT, PARALLEL PLATE RELIEF, BOTTOM PLATE		Welded Stainless Steel 304/304L
9	3	BC-02128-0121	EYEBOLT, 3/8-16 UNC, 1300#	33045T81	Stainless Steel 304
10	1	BC-02128-5840	ASSEMBLY, CRYOGENIC OUTLET		Welded Stainless Steel 304/304L
11	1	BC-02128-5860	ASSEMBLY, REGENERATION GAS INLET		Welded Stainless Steel 304/304L
12	1	BC-02128-5830	ASSEMBLY, CRYOGENIC INLET		Welded Stainless Steel 304/304L
13	1	BC-02128-5850	ASSEMBLY, REGENERATION GAS OUTLET		Welded Stainless Steel 304/304L

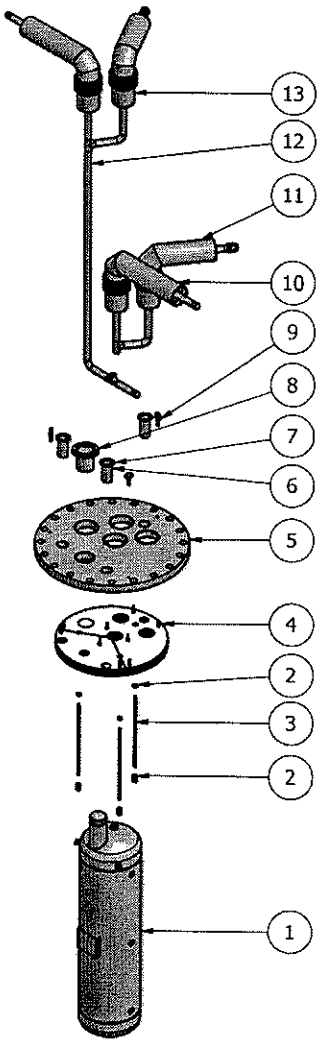

NOTE:

1. BREAK ALL SHARP EDGES AND CORNERS TO R.005.
2. DRAWING IS FOR PRESSURE VESSELS -01, -02 & -03.
3. MATERIAL CERTS REQUIRED ON ALL ITEMS. (DELIVER TO PROJECT ENGINEER).
4. PRE-CLEAN ALL SURFACES PRIOR TO FABRICATION PER SPEC. BC-101-052-010 SECTIONS 11.0.
   4.1. FINAL CLEANING SHALL BE PERFORMED USING ETHYL ALCOHOL & A LINT FREE CLOTH.
5. "◇22" WELD PER EDEN SPEC BC101-001-022, LATEST REV.
6. RADIOGRAPHICALLY INSPECT 5% OF BUTT WELDS PER ANSI B31.3.
7. PERFORM MASS SPECTOMETER LEAK TEST (REF. BC101-050-010 SECTION 5.6.1).
8. PRESSURE TEST PER EDEN SPEC BC101-50-010 SECTION 5.6; DESIGN PRESSURE 150 PSIG. TEST PRESSURE 188 PSIG.
9. FORWARD COPY OF TEST REPORT TO PROJECT ENGINEER.

NOTES: (UNLESS OTHERWISE SPECIFIED)
1. DIMENSIONS ARE IN INCHES, CONFORMING TO ASME Y14.5-1994. ALL DIMENSIONS APPLY AFTER FINISH.
2. DE-BURR AND BREAK ALL SHARP EDGES AND CORNERS TO R.015 MAX.
3. SURFACE TEXTURE/FINISH 64 RMS

TOLERANCES:
X.X ± .030
X.XX ± .010
X.XXX ± .005
ANGULAR ± 1/2°

INFORMATION SHOWN ON THIS DRAWING IS PROPRIETARY AND THE SOLE PROPERTY OF EDEN CRYOGENICS, LLC AND IS NOT TO BE REPRODUCED, DISCLOSED OR USED WITHOUT WRITTEN CONSENT FOR ANY PURPOSE NOT AUTHORIZED BY EDEN CRYOGENICS, LLC.

eden CRYOGENICS
8445 RAUSCH DRIVE
PLAIN CITY, OH 43064
614.873.3949
www.edencryogenics.com

DWN: MAB 12/11/2009
CHKD: JMH 12/28/2009
ENGR: JMH 12/28/2009
APPR:

CDR: 09-0377
DATE: 12/28/2009
SCALE: 1:25

TITLE
BC-02128
FINAL ASSEMBLY, LAR PRESSURE VESSEL W/ PORTS

SIZE: B
DRAWING/PART NUMBER: BC-02128-5815
SHEET: 2 OF 2
REV:

Information Copy
v3.10.15 116 / 424

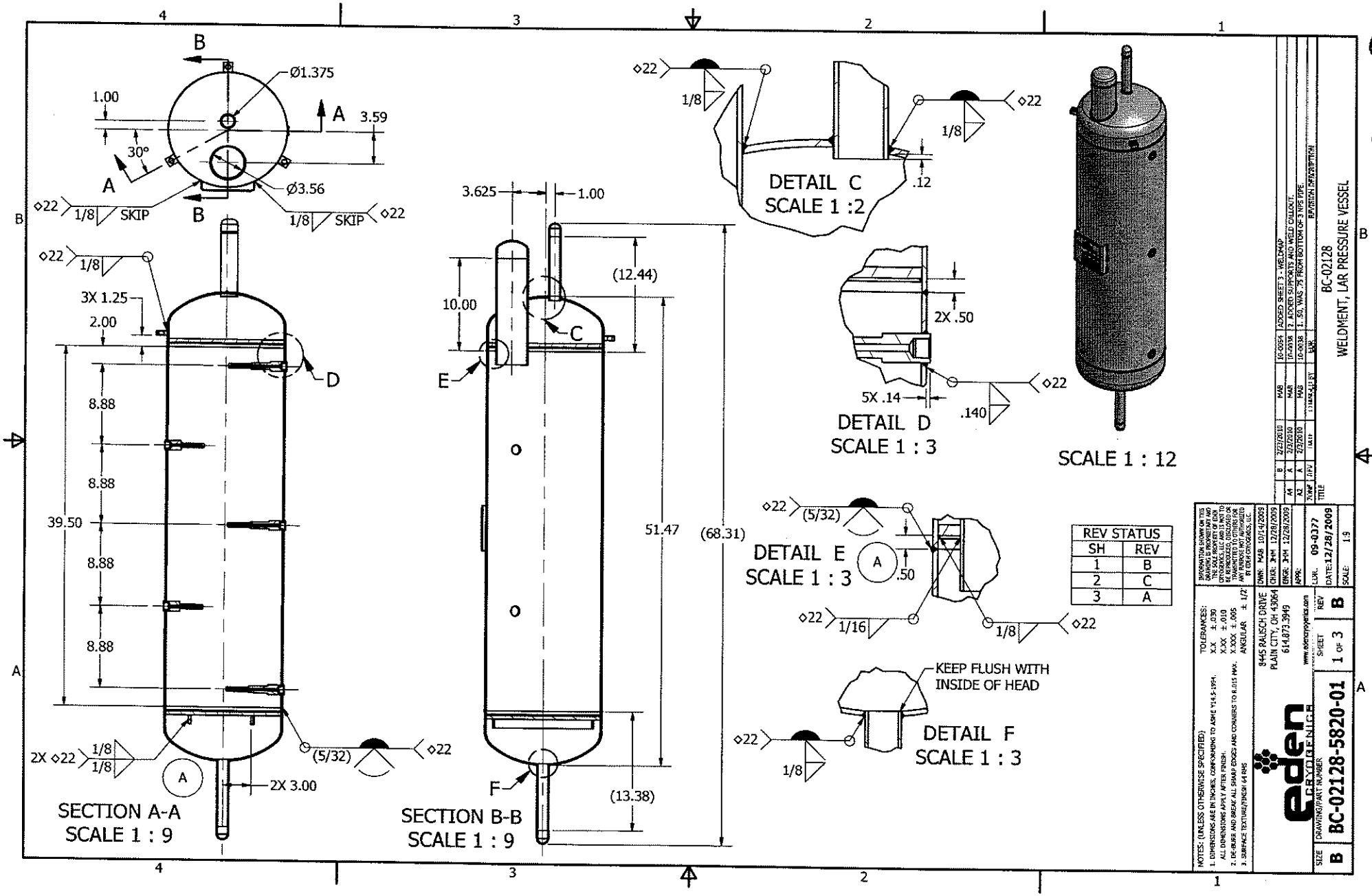

Information Copy
v3.10.15 117/424

Information Copy
v3.10.15 118 / 424

PARTS LIST

ITEM	ITEM QTY	PART NUMBER	DESCRIPTION	STOCK NUMBER	PO NO.	HEAT NO.	MATERIAL
1	2	BC-02128-0050	WELD CAP, 1 NPS X SCH 10		BC-3276	0181	Stainless Steel 304/304L ASME SA182
2	2	BC-02128-0059	PIPE, 1 NPS X SCH 10 X 15 LG	PI-016-010-021	BC-3276	829979	Stainless Steel 304/304L ASME SA312
3	2	BC-02128-0053	WELD CAP, 12 NPS X SCH 10		BC-3276	BB070055	Stainless Steel 304/304L ASTM A403
4	1	BC-02128-0057	INNER VESSEL, GKN SINTERED METAL DISC	SIKA -R 30	BC-3279	A317725_10	AISI 316L
5	1	BC-02128-0052	PRESSURE VESSEL, PIPE, 12 NPS X SCH 10	PI-192-010-021	BC-3276	280463	Stainless Steel 304/304L ASME SA312
6	3	BC-02128-0055	THERMOWELL	T700-P-6	BC-3283	3C730	Stainless Steel 304/304L
7	1	BC-02128-0058	INNER VESSEL, GKN SINTERED METAL DISC	SIKA -R 30	BC-3279	A317725_20	AISI 316L
8	1	LB-003-001-020	VESSEL BRACKET, CODED LABEL		BC-3453	5LV5	Stainless Steel 304/304L ASME SA240
9	2	BC-02128-0056	THERMOWELL	T700-P-4	BC-3283	3C730	Stainless Steel 304/304L
10	3	BC-02128-0124	BRACKET, HANGING SUPPORT		BC-3175	231105	Stainless Steel 304/304L ASTM A240
11	1	BC-02128-0051	INNER VESSEL, PIPE, 3 NPS X SCH 10 X 11 1/2 LG	PI-048-010-021	BC-3276	391025	Stainless Steel 304/304L ASME SA312
12	1	BC-02128-0054	WELD CAP, 3 NPS X SCH 10		BC-3276	139308	Stainless Steel 304/304L ASTM A403
13	2	BC-02128-0075	SUPPORT, SINTERED METAL, 1/4 X 1 X 11 LG		BC-3427	156654/ 252208	Stainless Steel 304/304L ASME SA479
14	1	BC-02128-1701	LABEL, CODED VESSEL	LB-003-000-001			Stainless Steel 304/304L

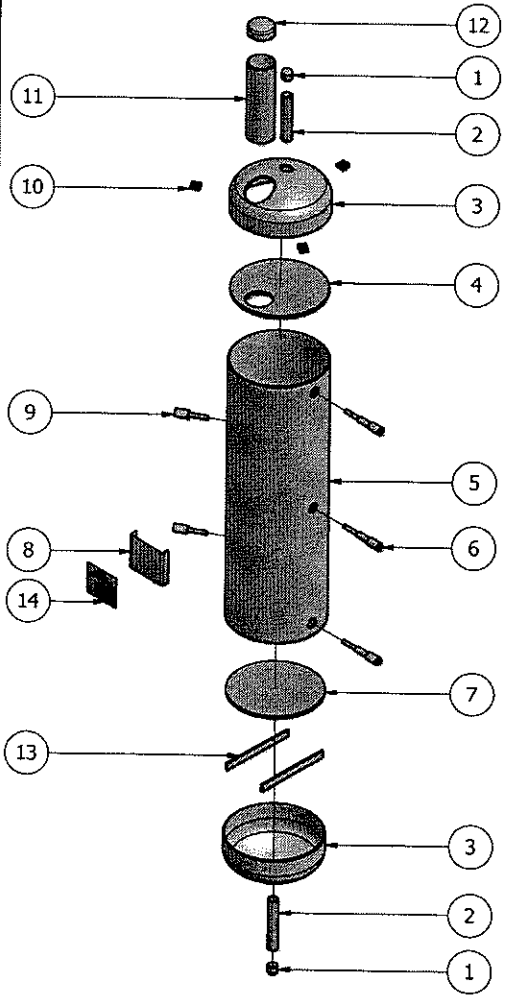

NOTE:

1. BREAK ALL SHARP EDGES AND CORNERS TO R.005.
2. VESSEL TO BE BUILT TO BOILER & PRESSURE CODE ASME SECTION VIII DIVISION I.
3. MATERIAL CERTS REQUIRED ON ALL ITEMS. (DELIVER TO PROJECT ENGINEER).
4. PRE-CLEAN ALL SURFACES PRIOR TO FABRICATION PER SPEC. BC-101-052-010 SECTIONS 11.0.
   4.1. FINAL CLEANING SHALL BE PERFORMED USING ETHYL ALCOHOL & A LINT FREE CLOTH.
5. "◇22" WELD PER EDEN SPEC BC101-001-022, LATEST REV.
6. PASSIVATE ALL WELDS.
7. DESIGN PRESSURE 150 PSIG, PNEUMATIC TEST PRESSURE 165 PSIG.
8. MASS SPEC. PER EDEN CRYOGENICS SPEC. BC-101-070-001.
9. INSPECT INNER SURFACES WITH ULTRA VIOLET LIGHT PER EDEN SPEC. BC-101-052-010, SECTION 13.2.
10. CERTIFIED TEST REPORTS AND TEST RECORD/DATA SHEETS SHALL BE PROVIDED TO THE PROJECT ENGINEER FOR THE FOLLOWING TESTS:
    10.1. MASS SPEC. PER EDEN CRYOGENICS SPEC. BC-101-070-001.
11. ATTACH LABEL BC-02128-1701 AFTER A.I. INSPECTION.

ZONE	REV	DATE	CHANGED BY	EDR	REVISION DESCRIPTION
A3	C	3/23/2010	MAB	10-0080	3. ADDED NOTE 11, ATTACH LABEL.
B4	C	3/23/2010	MAB	10-0080	2. ADDED ITEM 14, CODED VESSEL LABEL.
B3	C	3/23/2010	MAB	10-0080	1. ADDED PO NO.'s AND HEAT NO.'s.
A3	B	2/23/2010	MAB	10-0054	CHANGED NOTE 2, PREVIOUSLY SAID THE DRAWING WAS FOR VESSELS -01, -02, & -03.
B4	A	2/3/2010	MAB	10-0038	ADDED ITEM 13: BC-02128-0075.

TITLE: BC-02128 WELDMENT, LAR PRESSURE VESSEL

DWN: MAB 10/14/2009
CHKD: JHM 12/28/2009
ENGR: JHM 12/28/2009
APPR:
EDR: 09-0377
DATE: 12/28/2009
SCALE: 1:15

NOTES: (UNLESS OTHERWISE SPECIFIED)
1. DIMENSIONS ARE IN INCHES, CONFORMING TO ASME Y14.5-1994. ALL DIMENSIONS APPLY AFTER FINISH.
2. DE-BURR AND BREAK ALL SHARP EDGES AND CORNERS TO R.015 MAX.
3. SURFACE TEXTURE/FINISH 64 RMS

TOLERANCES:
X.X ± .030
X.XX ± .010
X.XXX ± .005
ANGULAR ± 1/2°

INFORMATION SHOWN ON THIS DRAWING IS PROPRIETARY AND THE SOLE PROPERTY OF EDEN CRYOGENICS, LLC AND IS NOT TO BE REPRODUCED OR DISCLOSED OR TRANSMITTED TO OTHERS FOR ANY PURPOSE NOT AUTHORIZED BY EDEN CRYOGENICS, LLC.

eden CRYOGENICS
8445 RAUSCH DRIVE
PLAIN CITY, OH 43064
614.873.3949
www.edencryogenics.com

SIZE: B
DRAWING/PART NUMBER: BC-02128-5820-01
SHEET: 2 OF 3
REV: C

Information Copy
v3.10.15 119 / 424

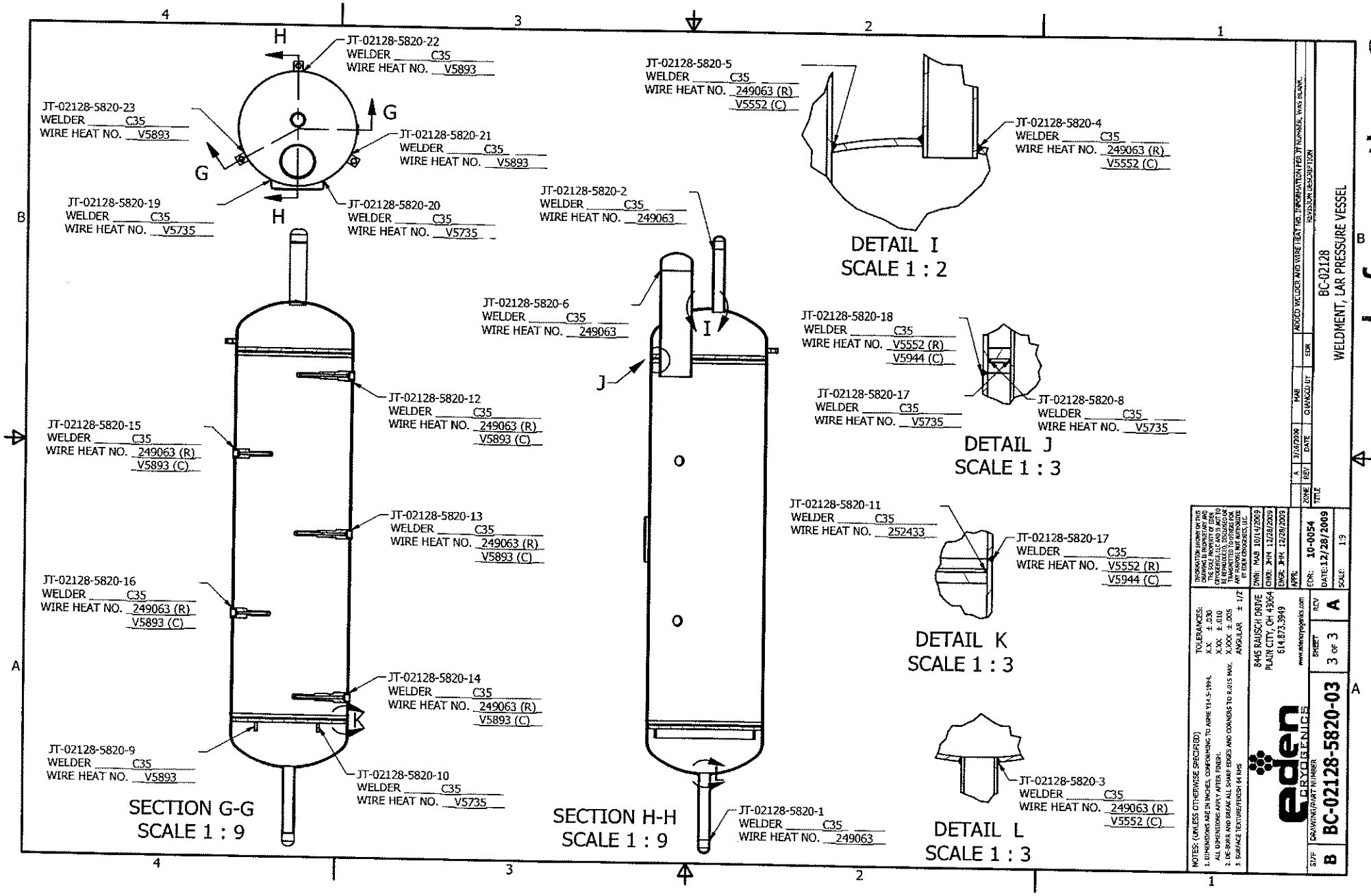

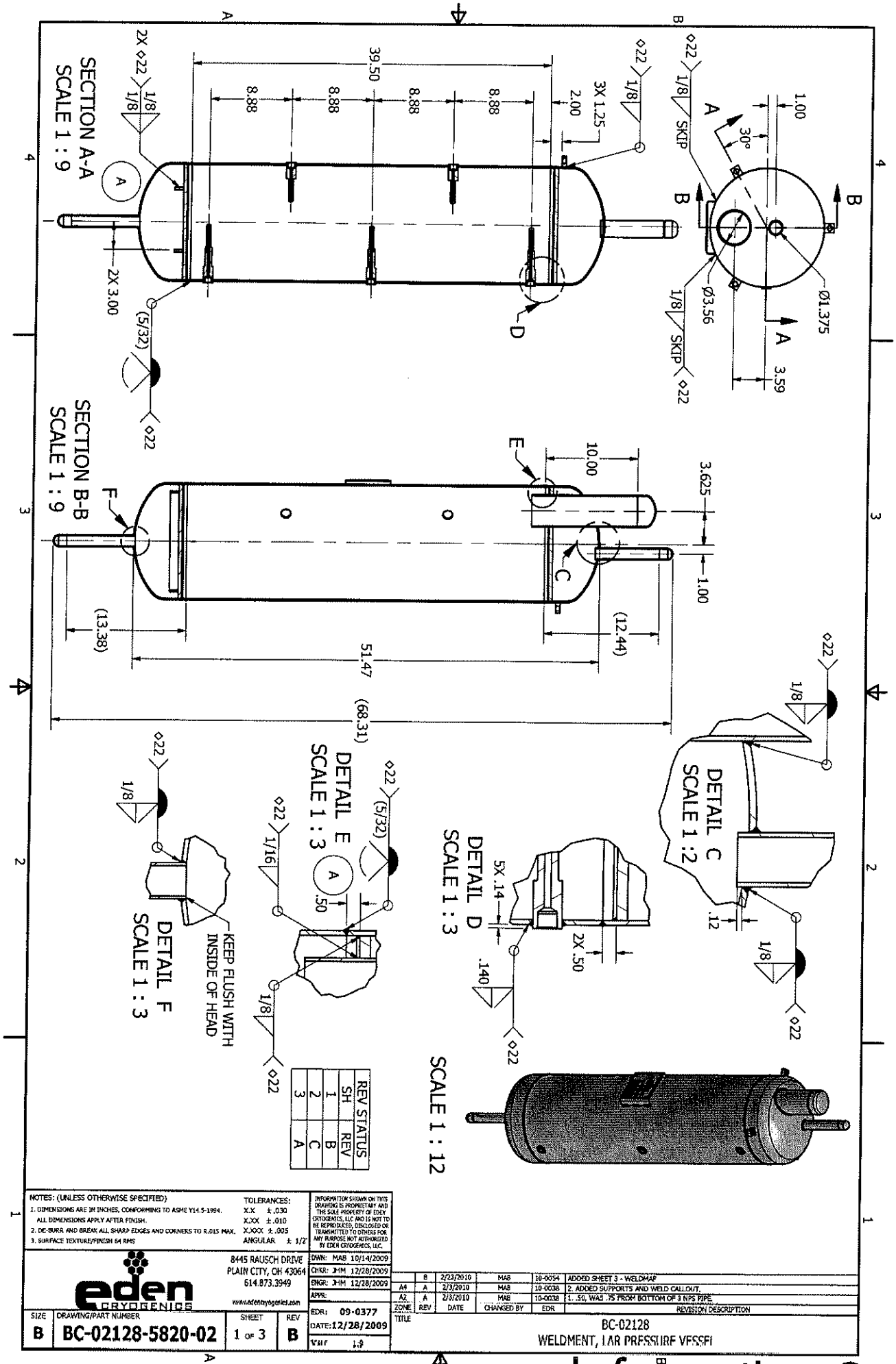

REV STATUS	
SH	REV
1	B
2	C
3	A

NOTES: (UNLESS OTHERWISE SPECIFIED)
1. DIMENSIONS ARE IN INCHES, CONFORMING TO ASME Y14.5-1994. ALL DIMENSIONS APPLY AFTER FINISH.
2. DE-BURR AND BREAK ALL SHARP EDGES AND CORNERS TO R.015 MAX.
3. SURFACE TEXTURE/FINISH 64 RMS

TOLERANCES:
X.X ±.030
X.XX ±.010
X.XXX ±.005
ANGULAR ± 1/2°

INFORMATION SHOWN ON THIS DRAWING IS PROPRIETARY AND THE SOLE PROPERTY OF EDEN CRYOGENICS, LLC AND IS NOT TO BE REPRODUCED, DISCLOSED OR TRANSMITTED TO OTHERS FOR ANY PURPOSE NOT AUTHORIZED BY EDEN CRYOGENICS, LLC.

eden CRYOGENICS
8445 RAUSCH DRIVE
PLAIN CITY, OH 43064
614.873.3949
www.edencryogenics.com

DWN: MAB 10/14/2009
CHKR: JHM 12/28/2009
ENGR: JHM 12/28/2009
APPR:
EDR: 09-0377
DATE: 12/28/2009
SCALE: 1:8

ZONE	REV	DATE	CHANGED BY	EDR	REVISION DESCRIPTION
	B	2/23/2010	MAB	10-0054	ADDED SHEET 3 - WELDMAP
A4	A	2/3/2010	MAB	10-0038	2. ADDED SUPPORTS AND WELD CALLOUT.
A2	A	2/3/2010	MAB	10-0038	1. .50, WAS .75 FROM BOTTOM OF 3 NPS PIPE.

SIZE	DRAWING/PART NUMBER	SHEET	REV
B	BC-02128-5820-02	1 OF 3	B

TITLE
BC-02128
WELDMENT, LAR PRESSURE VESSEL

Information Copy

Information Copy
v3.10.15 121 / 424

PARTS LIST

ITEM	ITEM QTY	PART NUMBER	DESCRIPTION	STOCK NUMBER	PO NO.	HEAT NO.	MATERIAL
1	2	BC-02128-0050	WELD CAP, 1 NPS X SCH 10		BC-3276	0181	Stainless Steel 304/304L ASME SA182
2	2	BC-02128-0059	PIPE, 1 NPS X SCH 10 X 15 LG	PI-016-010-021	BC-3276	829979	Stainless Steel 304/304L ASME SA312
3	2	BC-02128-0053	WELD CAP, 12 NPS X SCH 10		BC-3276	BB070055	Stainless Steel 304/304L ASTM A403
4	1	BC-02128-0057	INNER VESSEL, GKN SINTERED METAL DISC	SIKA -R 30	BC-3279	A317725_10	AISI 316L
5	1	BC-02128-0052	PRESSURE VESSEL, PIPE, 12 NPS X SCH 10	PI-192-010-021	BC-3276	280463	Stainless Steel 304/304L ASME SA312
6	3	BC-02128-0055	THERMOWELL	T700-P-6	BC-3283	3C730	Stainless Steel 304/304L
7	1	BC-02128-0058	INNER VESSEL, GKN SINTERED METAL DISC	SIKA -R 30	BC-3279	A317725_20	AISI 316L
8	1	LB-003-001-020	VESSEL BRACKET, CODED LABEL		BC-3453	5LV5	Stainless Steel 304/304L ASME SA240
9	2	BC-02128-0056	THERMOWELL	T700-P-4	BC-3283	3C730	Stainless Steel 304/304L
10	3	BC-02128-0124	BRACKET, HANGING SUPPORT		BC-3175	231105	Stainless Steel 304/304L ASTM A240
11	1	BC-02128-0051	INNER VESSEL, PIPE, 3 NPS X SCH 10 X 11 1/2 LG	PI-048-010-021	BC-3276	391025	Stainless Steel 304/304L ASME SA312
12	1	BC-02128-0054	WELD CAP, 3 NPS X SCH 10		BC-3276	139308	Stainless Steel 304/304L ASTM A403
13	2	BC-02128-0075	SUPPORT, SINTERED METAL, 1/4 X 1 X 11 LG		BC-3427	156654/ 252208	Stainless Steel 304/304L ASME SA479
14	1	BC-02128-1702	LABEL, CODED VESSEL	LB-003-000-001			Stainless Steel 304/304L

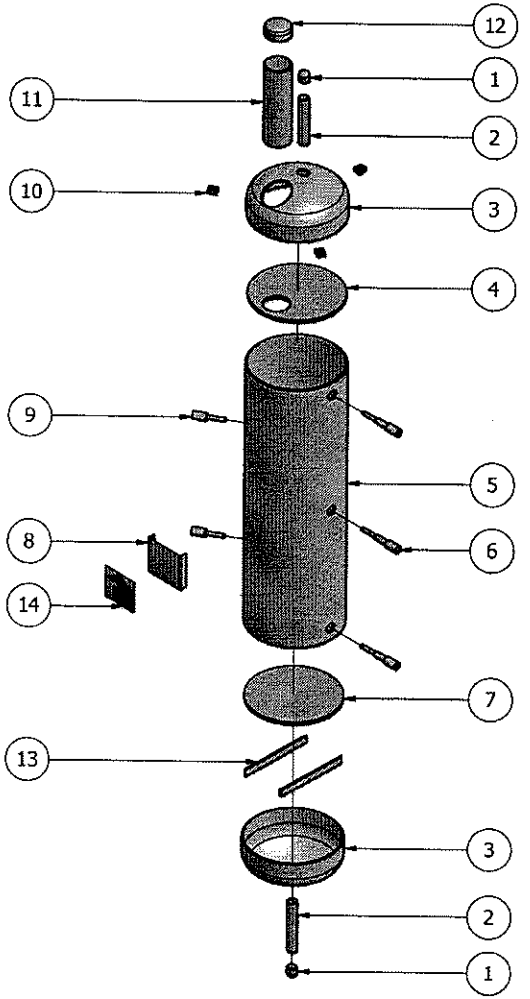

NOTE:

1. BREAK ALL SHARP EDGES AND CORNERS TO R.005.
2. VESSEL TO BE BUILT TO BOILER & PRESSURE CODE ASME SECTION VIII DIVISION I.
3. MATERIAL CERTS REQUIRED ON ALL ITEMS. (DELIVER TO PROJECT ENGINEER).
4. PRE-CLEAN ALL SURFACES PRIOR TO FABRICATION PER SPEC. BC-101-052-010 SECTIONS 11.0.
   4.1. FINAL CLEANING SHALL BE PERFORMED USING ETHYL ALCOHOL & A LINT FREE CLOTH.
5. "◇22" WELD PER EDEN SPEC BC101-001-022, LATEST REV.
6. PASSIVATE ALL WELDS.
7. DESIGN PRESSURE 150 PSIG, PNEUMATIC TEST PRESSURE 165 PSIG.
8. MASS SPEC. PER EDEN CRYOGENICS SPEC. BC-101-070-001.
9. INSPECT INNER SURFACES WITH ULTRA VIOLET LIGHT PER EDEN SPEC. BC-101-052-010, SECTION 13.2.
10. CERTIFIED TEST REPORTS AND TEST RECORD/DATA SHEETS SHALL BE PROVIDED TO THE PROJECT ENGINEER FOR THE FOLLOWING TESTS:
    10.1. MASS SPEC. PER EDEN CRYOGENICS SPEC. BC-101-070-001.
11. ATTACH LABEL BC-02128-1702 AFTER A.I. INSPECTION.

ZONE	REV	DATE	CHANGED BY	EDR	REVISION DESCRIPTION
A3	C	3/23/2010	MAB	10-0080	3. ADDED NOTE 11, ATTACH LABEL.
B4	C	3/23/2010	MAB	10-0080	2. ADDED ITEM 14, CODED VESSEL LABEL.
B3	C	3/23/2010	MAB	10-0080	1. ADDED PO NO.'S AND HEAT NO.'S.
A3	B	12/28/2009	MAB	10-0054	CHANGED NOT 2, PREVIOUSLY SAID THE DRAWING WAS FOR VESSEL -01, -02, & -03.
B4	A	2/3/2010	MAB	10-0038	ADDED ITEM 13: BC-02128-0075.

TITLE: BC-02128 WELDMENT, LAR PRESSURE VESSEL

NOTES: (UNLESS OTHERWISE SPECIFIED)
1. DIMENSIONS ARE IN INCHES, CONFORMING TO ASME Y14.5-1994. ALL DIMENSIONS APPLY AFTER FINISH.
2. DE-BURR AND BREAK ALL SHARP EDGES AND CORNERS TO R.015 MAX.
3. SURFACE TEXTURE/FINISH 64 RMS

TOLERANCES:
X.X ± .030
X.XX ± .010
X.XXX ± .005
ANGULAR ± 1/2°

INFORMATION SHOWN ON THIS DRAWING IS PROPRIETARY AND THE SOLE PROPERTY OF EDEN CRYOGENICS, LLC AND MUST NOT BE REPRODUCED, DISCLOSED OR TRANSMITTED TO OTHERS FOR ANY PURPOSE WITHOUT WRITTEN PERMISSION OF EDEN CRYOGENICS, LLC.

DWN: MAB 10/14/2009
CHK: JHM 12/28/2009
ENGR: JHM 12/28/2009
APPR:

eden CRYOGENICS
8445 RAUSCH DRIVE
PLAIN CITY, OH 43064
614.873.3949
www.edencryogenics.com

EDR: 09-0377
DATE: 12/28/2009
SCALE: 1:15

SIZE: B
DRAWING/PART NUMBER: BC-02128-5820-02
SHEET: 2 OF 3
REV: C

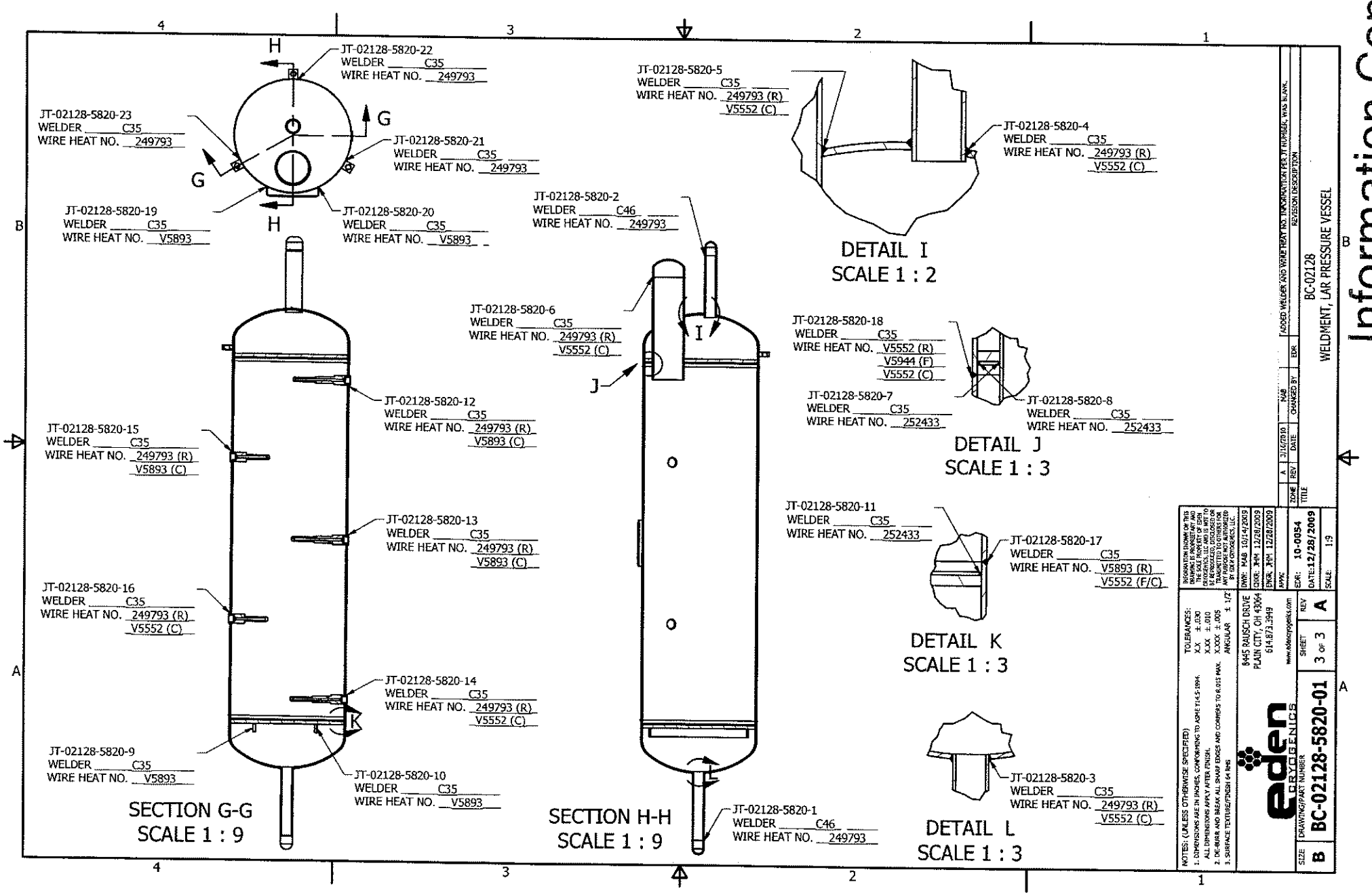

Information Copy
V3.10.15 122 / 424

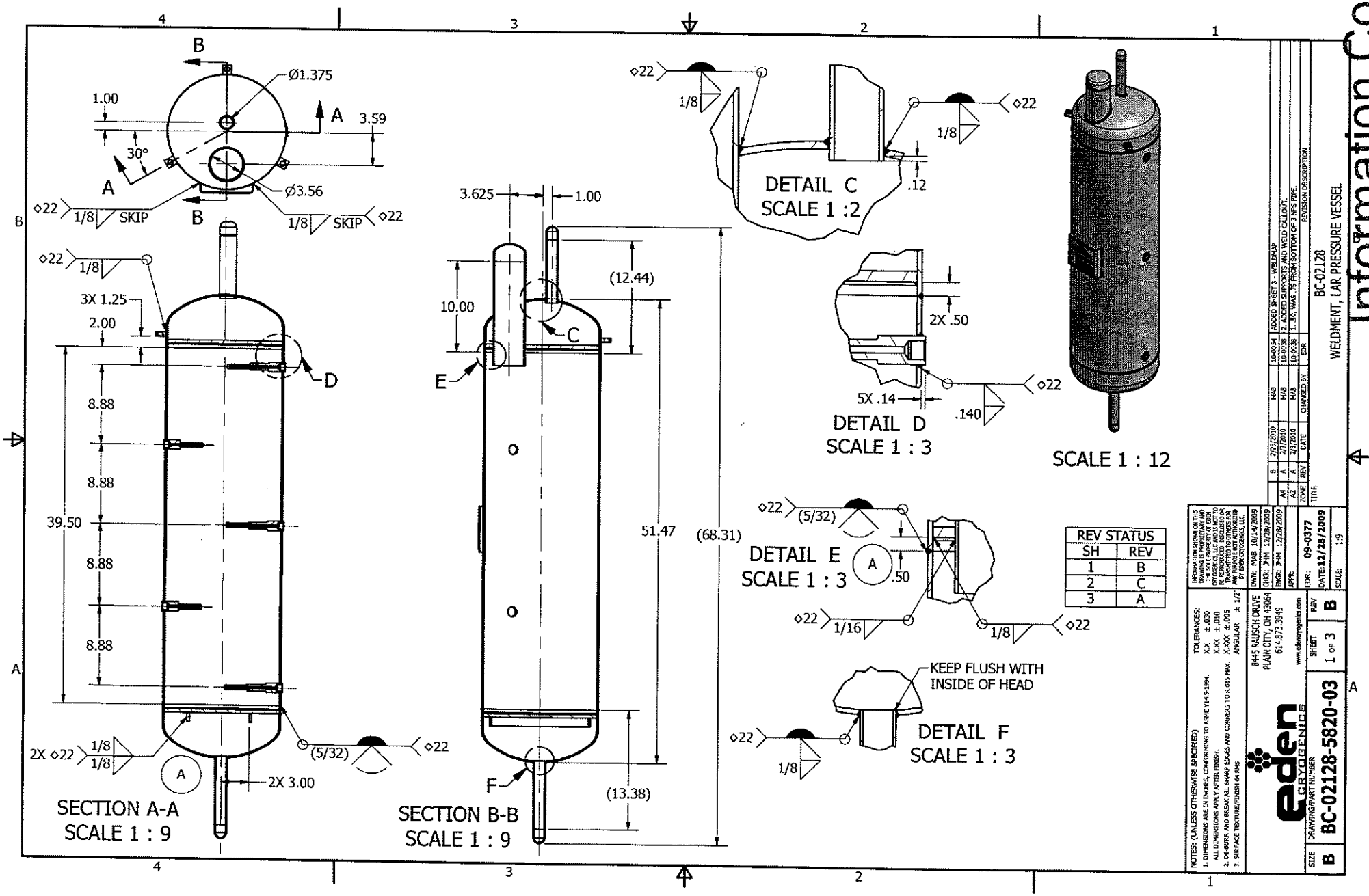

Information Copy

PARTS LIST							
ITEM	ITEM QTY	PART NUMBER	DESCRIPTION	STOCK NUMBER	PO NO.	HEAT NO.	MATERIAL
1	2	BC-02128-0050	WELD CAP, 1 NPS X SCH 10		BC-3276	0181	Stainless Steel 304/304L ASME SA182
2	2	BC-02128-0059	PIPE, 1 NPS X SCH 10 X 15 LG	PI-016-010-021	BC-3276	829979	Stainless Steel 304/304L ASME SA312
3	2	BC-02128-0053	WELD CAP, 12 NPS X SCH 10		BC-3276	BB070055	Stainless Steel 304/304L ASTM A403
4	1	BC-02128-0057	INNER VESSEL, GKN SINTERED METAL DISC	SIKA -R 30	BC-3279	A317725_10	AISI 316L
5	1	BC-02128-0052	PRESSURE VESSEL, PIPE, 12 NPS X SCH 10	PI-192-010-021	BC-3276	280463	Stainless Steel 304/304L ASME SA312
6	3	BC-02128-0055	THERMOWELL	T700-P-6	BC-3283	3C730	Stainless Steel 304/304L
7	1	BC-02128-0058	INNER VESSEL, GKN SINTERED METAL DISC	SIKA -R 30	BC-3279	A317725_20	AISI 316L
8	1	LB-003-001-020	VESSEL BRACKET, CODED LABEL		BC-3453	5LV5	Stainless Steel 304/304L ASME SA240
9	2	BC-02128-0056	THERMOWELL	T700-P-4	BC-3283	3C730	Stainless Steel 304/304L
10	3	BC-02128-0124	BRACKET, HANGING SUPPORT		BC-3175	231105	Stainless Steel 304/304L ASTM A240
11	1	BC-02128-0051	INNER VESSEL, PIPE, 3 NPS X SCH 10 X 11 1/2 LG	PI-048-010-021	BC-3276	391025	Stainless Steel 304/304L ASME SA312
12	1	BC-02128-0054	WELD CAP, 3 NPS X SCH 10		BC-3276	139308	Stainless Steel 304/304L ASTM A403
13	2	BC-02128-0075	SUPPORT, SINTERED METAL, 1/4 X 1 X 11 LG		BC-3427	156654/ 252208	Stainless Steel 304/304L ASME SA479
14	1	BC-02128-1702	LABEL, CODED VESSEL	LB-003-000-001			Stainless Steel 304/304L

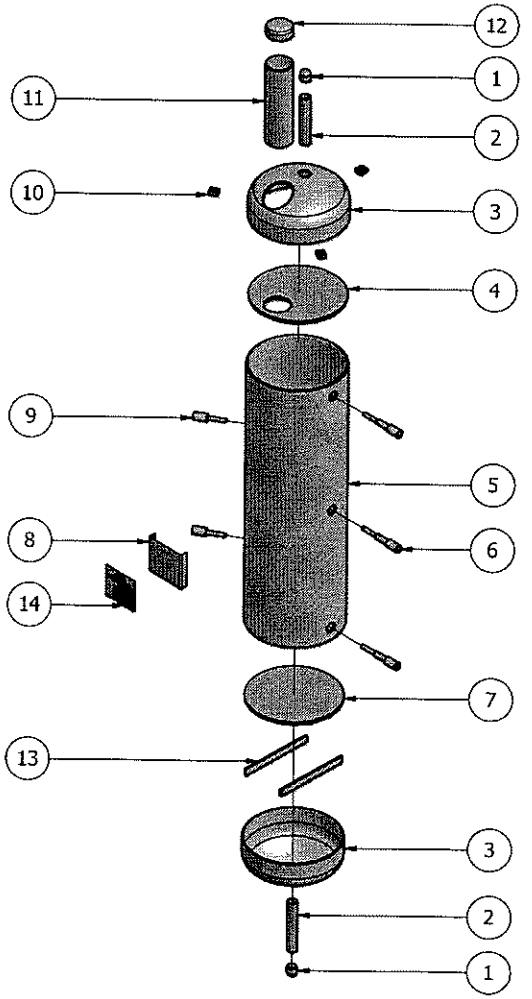

NOTE:

1. BREAK ALL SHARP EDGES AND CORNERS TO R.005.
2. VESSEL TO BE BUILT TO BOILER & PRESSURE CODE ASME SECTION VIII DIVISION I.
3. MATERIAL CERTS REQUIRED ON ALL ITEMS. (DELIVER TO PROJECT ENGINEER).
4. PRE-CLEAN ALL SURFACES PRIOR TO FABRICATION PER SPEC. BC-101-052-010 SECTIONS 11.0.
   4.1. FINAL CLEANING SHALL BE PERFORMED USING ETHYL ALCOHOL & A LINT FREE CLOTH.
5. "◊22" WELD PER EDEN SPEC BC101-001-022, LATEST REV.
6. PASSIVATE ALL WELDS.
7. DESIGN PRESSURE 150 PSIG, PNEUMATIC TEST PRESSURE 165 PSIG.
8. MASS SPEC. PER EDEN CRYOGENICS SPEC. BC-101-070-001.
9. INSPECT INNER SURFACES WITH ULTRA VIOLET LIGHT PER EDEN SPEC. BC-101-052-010, SECTION 13.2.
10. CERTIFIED TEST REPORTS AND TEST RECORD/DATA SHEETS SHALL BE PROVIDED TO THE PROJECT ENGINEER FOR THE FOLLOWING TESTS:
    10.1. MASS SPEC. PER EDEN CRYOGENICS SPEC. BC-101-070-001.
11. ATTACH LABEL BC-02128-1702 AFTER A.I. INSPECTION.

NOTES: (UNLESS OTHERWISE SPECIFIED)
1. DIMENSIONS ARE IN INCHES, CONFORMING TO ASME Y14.5-1994. ALL DIMENSIONS APPLY AFTER FINISH.
2. DE-BURR AND BREAK ALL SHARP EDGES AND CORNERS TO R.015 MAX.
3. SURFACE TEXTURE/FINISH 64 RMS

TOLERANCES:
X.X ± .030
X.XX ± .010
X.XXX ± .005
ANGULAR ± 1/2°

INFORMATION SHOWN ON THIS DRAWING IS PROPRIETARY AND THE SOLE PROPERTY OF EDEN CRYOGENICS, LLC AND IS NOT TO BE REPRODUCED, DISCLOSED OR TRANSMITTED TO OTHERS FOR ANY PURPOSE WITHOUT AUTHORIZATION BY EDEN CRYOGENICS, LLC.

eden CRYOGENICS
8445 RAUSCH DRIVE
PLAIN CITY, OH 43064
614.873.3949
www.edencryogenics.com

DWN: MAB 10/14/2009
CHKD: JHM 12/28/2009
ENGR: JHM 12/28/2009
APPR:
EDR: 09-0377
DATE: 12/28/2009
SCALE: 1:15

ZONE	REV	DATE	CHANGED BY	EDR	REVISION DESCRIPTION
A3	C	3/23/2010	MAB	10-0080	3. ADDED NOTE 11. ATTACH LABEL.
B4	C	3/23/2010	MAB	10-0080	2. ADDED ITEM 14, CODED VESSEL LABEL.
B3	C	3/23/2010	MAB	10-0080	1. ADDED PO NO'S AND HEAT NO's.
A3	B	7/27/2009	MAB	10-0054	CHANGED NOT 2. PRETFOUCLY SAID THE DRAWING WAS FOR VESSEL -01, -02, & -03.
B4	A	2/3/2010	MAB	10-0038	ADDED ITEM 13. BC-02128-0075.

TITLE
BC-02128
WELDMENT, LAR PRESSURE VESSEL

SIZE B
DRAWING/PART NUMBER BC-02128-5820-02
SHEET 2 OF 3
REV C

Information Copy

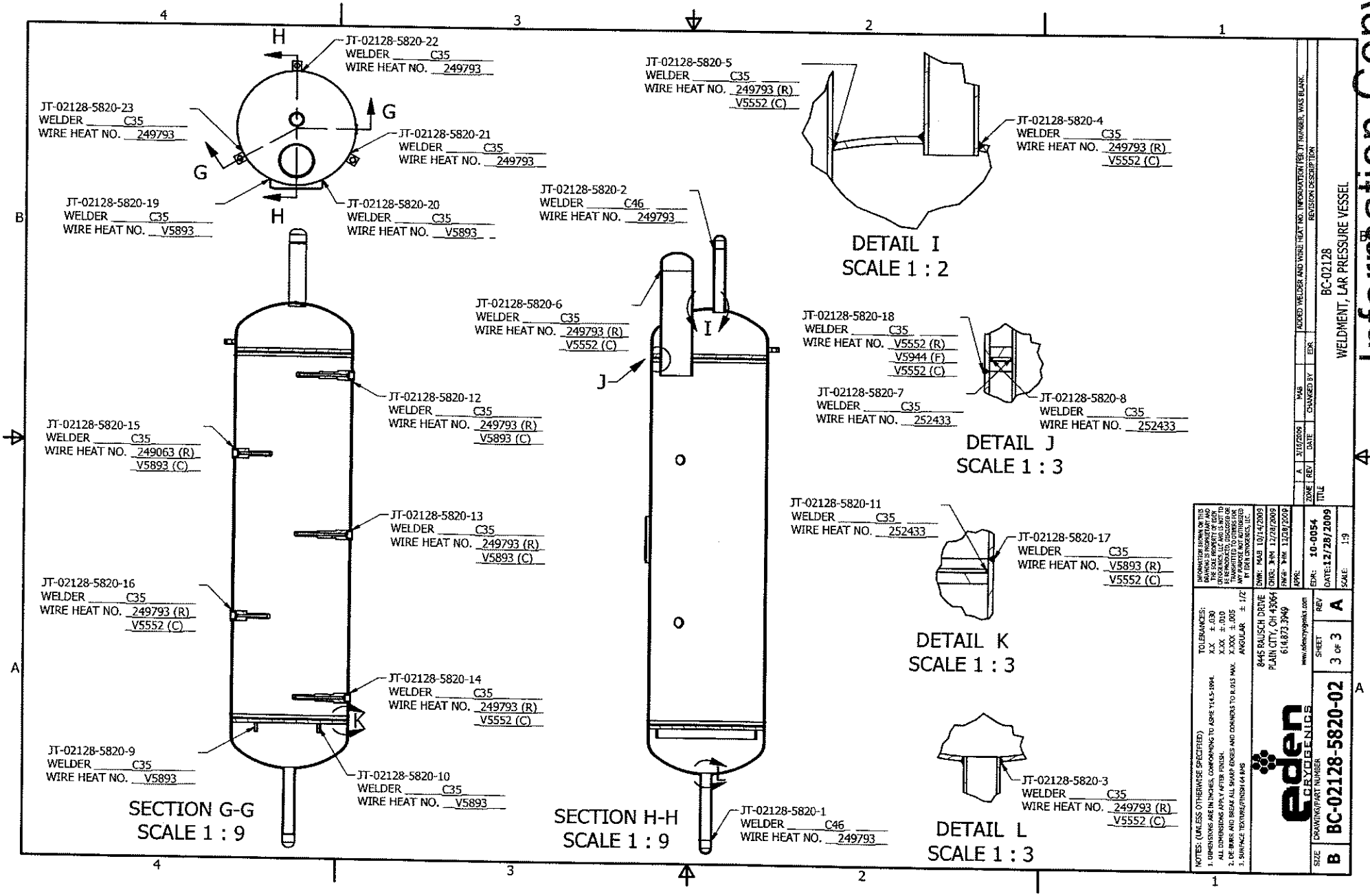

Information Copy

v3.10.15 125 / 424

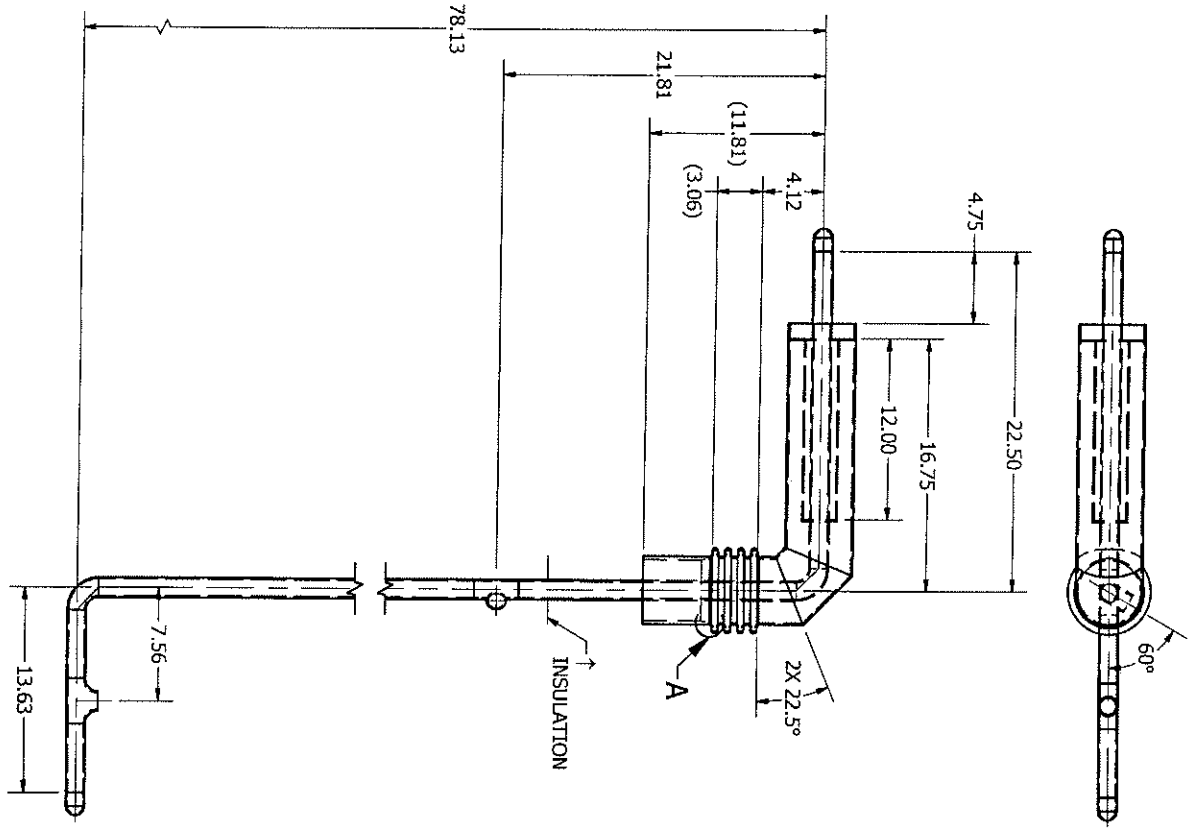

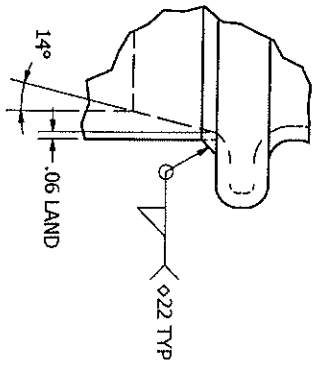

DETAIL A
SCALE 1 : 1

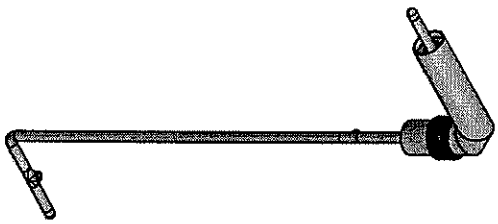

SCALE 1 : 16

REV STATUS	
SH	REV
1	-
2	-
3	-

NOTES: (UNLESS OTHERWISE SPECIFIED)
1. DIMENSIONS ARE IN INCHES, CONFORMING TO ASME Y14.5-1994. ALL DIMENSIONS APPLY AFTER FINISH.
2. DE-BURR AND BREAK ALL SHARP EDGES AND CORNERS TO R.015 MAX.
3. SURFACE TEXTURE/FINISH 64 RMS

TOLERANCES:
X.X ±.030
X.XX ±.010
X.XXX ±.005
ANGULAR ± 1/2°

INFORMATION SHOWN ON THIS DRAWING IS PROPRIETARY AND THE SOLE PROPERTY OF EDEN CRYOGENICS, LLC AND IS NOT TO BE REPRODUCED, DISCLOSED OR TRANSMITTED TO OTHERS FOR ANY PURPOSE NOT AUTHORIZED BY EDEN CRYOGENICS, LLC.

eden CRYOGENICS
8445 RAUSCH DRIVE
PLAIN CITY, OH 43064
614.873.3949
www.edencryogenics.com

DWN: MAB 11/3/2009
CHKR: JHM 12/28/2009
ENGR: JHM 12/28/2009
APPR:
EDR: 09-0377
DATE: 12/28/2009
SCALE: 1:8

ZONE	REV	DATE	CHANGED BY	EDR	REVISION DESCRIPTION
	-				

TITLE
BC-02128
ASSEMBLY, CRYOGENIC INLET

SIZE	DRAWING/PART NUMBER	SHEET	REV
B	BC-02128-5830	1 OF 3	-

Information Copy

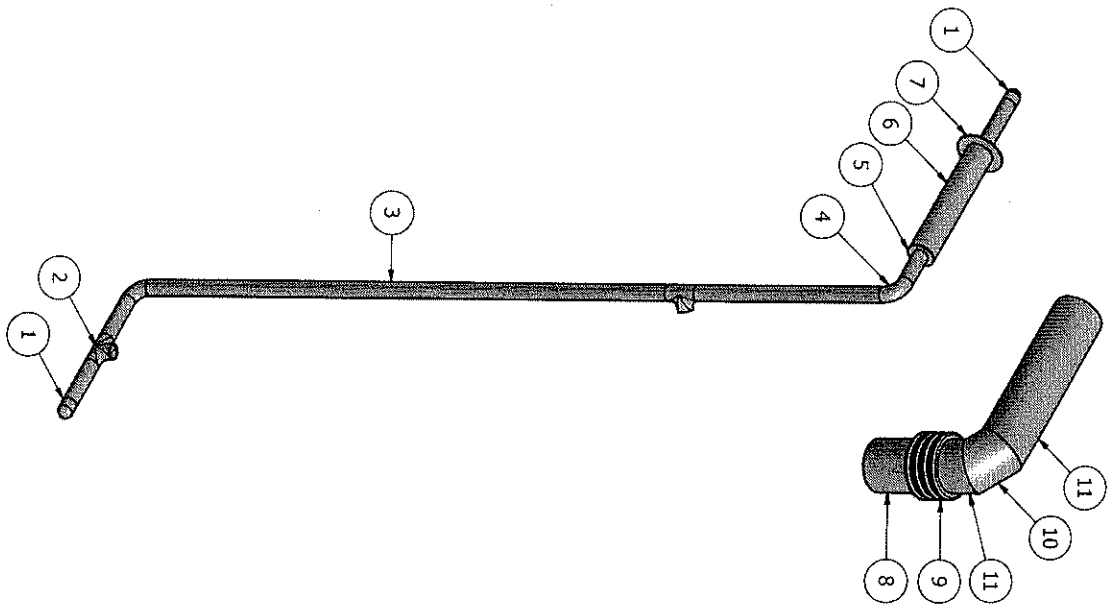

NOTES: (UNLESS OTHERWISE SPECIFIED)
1. DIMENSIONS ARE IN INCHES, CONFORMING TO ASME Y14.5-1994. ALL DIMENSIONS APPLY AFTER FINISH.
2. DE-BURR AND BREAK ALL SHARP EDGES AND CORNERS TO R .015 MAX.
3. SURFACE TEXTURE/FINISH 64 RMS

TOLERANCES:
X.X ±.030
X.XX ±.010
X.XXX ±.005
ANGULAR ± 1/2°

INFORMATION SHOWN ON THIS DRAWING IS PROPRIETARY AND THE SOLE PROPERTY OF EDEN CRYOGENICS, LLC AND IS NOT TO BE REPRODUCED, DISCLOSED OR TRANSMITTED TO OTHERS FOR ANY PURPOSE NOT AUTHORIZED BY EDEN CRYOGENICS, LLC.

eden CRYOGENICS
8445 RAUSCH DRIVE
PLAIN CITY, OH 43064
614.873.3949
www.edencryogenics.com

DWN: MAB 11/3/2009
CHKR: JHM 12/28/2009
ENGR: JHM 12/28/2009
APPR:
EDR: 09-0377
DATE: 12/28/2009
SCALE: 1:12

ZONE	REV	DATE	CHANGED BY	EDR	REVISION DESCRIPTION
	-				

SIZE	DRAWING/PART NUMBER	SHEET	REV
B	BC-02128-5830	2 OF 3	-

TITLE
BC-02128
ASSEMBLY, CRYOGENIC INLET

Information Copy

PARTS LIST					
ITEM	ITEM QTY	PART NUMBER	DESCRIPTION	STOCK NUMBER	MATERIAL
1	2	BC-02128-0061	WELD CAP, 1 NPS X SCH 10		Stainless Steel 304/304L ASME SA403
2	2	BC-02128-0062	TEE, 1 NPS X SCH 10		Stainless Steel 304/304L ASME SA403
3	A/R	BC-02128-0060	CRYOGENIC INLET, PIPE, 1 NPS X SCH 10	PI-016-010-021	Stainless Steel 304/304L ASME SA312
4	2	BC-02128-0063	ELBOW, LR, 1 NPS X SCH 10		Stainless Steel 304/304L ASME SA403
5	1	SR-002-036-306	STAND-OFF RING, 1 NPS X 2 NPS X 11 GA.		Stainless Steel 304/304L ASTM A240
6	A/R	BC-02128-0067	CRYOGENIC INLET, PIPE, 2 NPS X SCH 10	PI-032-010-021	Stainless Steel 304/304L ASME SA312
7	1	BC-02128-0068	STAND-OFF RING, 2 NPS X 4.20 OD X 11 GA		Stainless Steel 304/304L ASTM A240
8	1	BC-02128-0070	CRYOGENIC INLET, PIPE, 4 NPS X SCH 40	PI-064-040-021	Stainless Steel 304/304L ASME SA312
9	1	BC-02128-0066	CRYOGENIC INLET, BELLOWS, 4 NPS		Stainless Steel 304/304L ASME SA321
10	1	BC-02128-0069	MITERED ELBOW, PIPE, 4 NPS X SCH 10	PI-048-010-021	Stainless Steel 304/304L ASME SA312
11	A/R	BC-02128-0065	CRYOGENIC INLET, PIPE, 4 NPS X SCH 10	PI-064-010-021	Stainless Steel 304/304L ASME SA312
12	A/R	BC-02128-0074	INSULATION, PRYOGEL XT		

NOTE:

1. BREAK ALL SHARP EDGES AND CORNERS TO R.005.
2. "◇22" WELD PER EDEN SPEC BC101-001-022, LATEST REV.
3. ALL DIMENSIONS ARE FOR REFERENCE ONLY.
   3.1. FINAL DIMENSIONS TO BE VERIFIED AT NEXT ASSEMBLY.
4. FABRICATE PER EDEN SPEC. BC101-50-1001 SECT. 1-9.
5. ALL INNER LINE BUTT WELDS ARE TO BE INSPECTED TO CONFIRM FULL PENETRATION AS FOLLOWS:
   5.1 VEISUAL EXAMINATION OF ID WHERE POSSIBLE.
   5.2 WHERE (5.1) IS NOT POSSIBLE, RANDOM RADIOGRAPHICALLY INSPECT 5% OF ALL INNER LINE BUTT WELDS NOT INCLUDING THOSE EXAMINED VISUALLY, (THIS IS TO BE 5% OF THE ENTIRE JOB, NOT 5 % OF EACH SPOOL). USE SINGLE FILM ONLY.
6. INSULATION PROVIDED BY CUSTOMER.
   6.1 WRAP PIPE WITH TWO 10mm THICK LAYERS OF "PRYOGEL XT".

NOTES: (UNLESS OTHERWISE SPECIFIED)
1. DIMENSIONS ARE IN INCHES, CONFORMING TO ASME Y14.5-1994. ALL DIMENSIONS APPLY AFTER FINISH.
2. DE-BURR AND BREAK ALL SHARP EDGES AND CORNERS TO R.015 MAX.
3. SURFACE TEXTURE/FINISH 64 RMS

TOLERANCES:
X.X ± .030
X.XX ± .010
X.XXX ± .005
ANGULAR ± 1/2°

eden CRYOGENICS
8445 RAUSCH DRIVE
PLAIN CITY, OH 43064
614.873.5949
www.edencryogenics.com

DWN: MAB 11/3/2009
CHKD: JHM 12/28/2009
ENGR: JHM 12/28/2009
APPR:

EDR: 09-0377
DATE: 12/28/2009
SCALE:

INFORMATION SHOWN ON THIS DRAWING IS PROPRIETARY AND MAY NOT BE REPRODUCED BY EDEN CRYOGENICS, LLC AND IS NOT TO BE REPRODUCED, DISCLOSED OR TRANSFERRED TO OTHERS FOR ANY PURPOSE NOT AUTHORIZED BY EDEN CRYOGENICS, LLC.

ZONE	REV	DATE	CHANGED BY	EDR	REVISION DESCRIPTION
	-				

TITLE: BC-02128 ASSEMBLY, CRYOGENIC INLET

SIZE: B
DRAWING/PART NUMBER: BC-02128-5830
SHEET: 3 OF 3
REV: -

Information Copy
v3.10.15.128.424

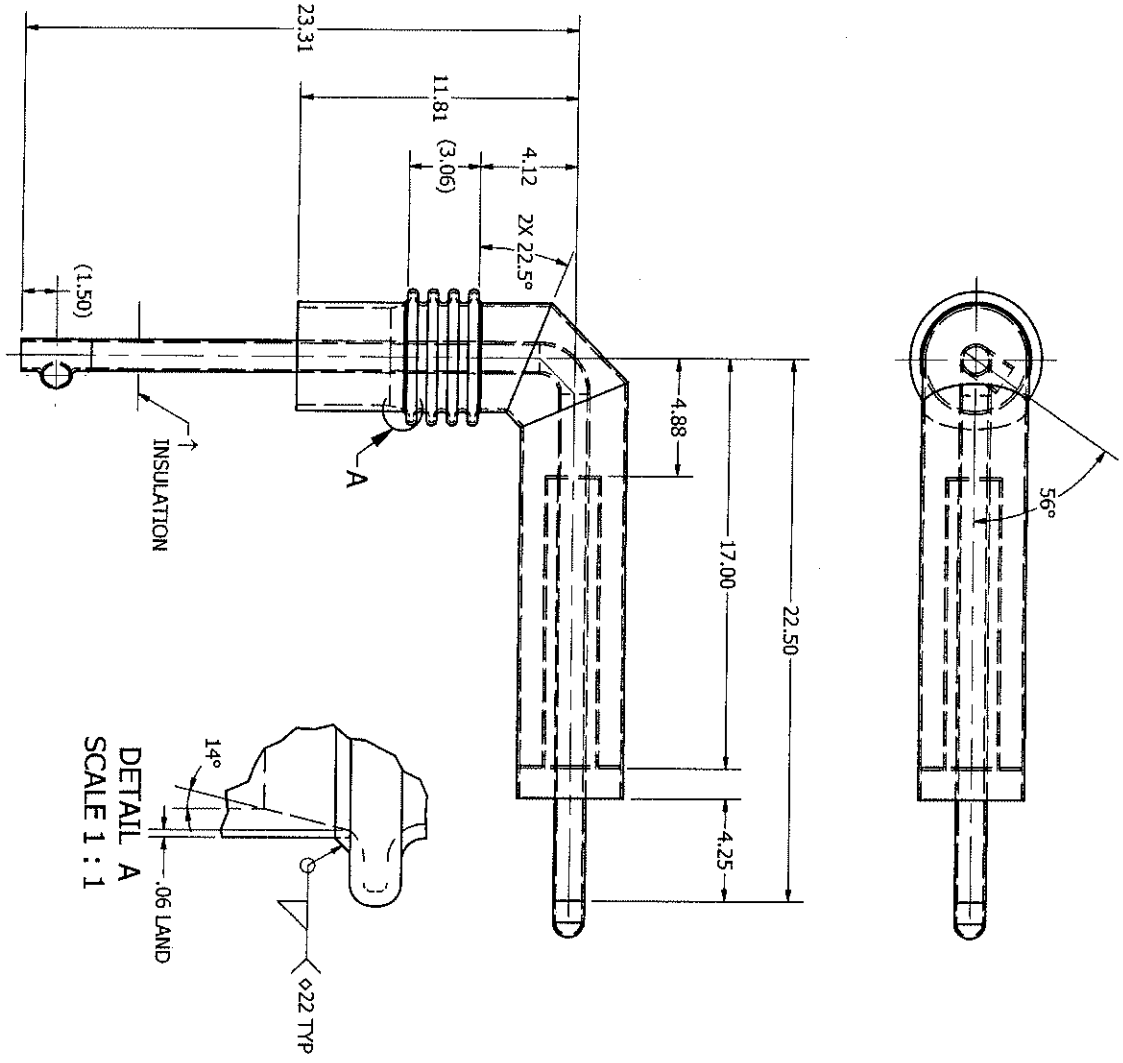

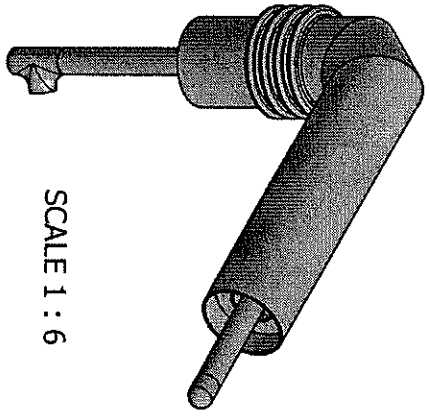

SCALE 1 : 6

REV STATUS	
SH	REV
1	-
2	-

NOTES: (UNLESS OTHERWISE SPECIFIED)
1. DIMENSIONS ARE IN INCHES, CONFORMING TO ASME Y14.5-1994. ALL DIMENSIONS APPLY AFTER FINISH.
2. DE-BURR AND BREAK ALL SHARP EDGES AND CORNERS TO R.015 MAX.
3. SURFACE TEXTURE/FINISH 64 RMS

TOLERANCES:
X.X ±.030
X.XX ±.010
X.XXX ±.005
ANGULAR ± 1/2°

INFORMATION SHOWN ON THIS DRAWING IS PROPRIETARY AND THE SOLE PROPERTY OF EDEN CRYOGENICS, LLC AND IS NOT TO BE REPRODUCED, DISCLOSED OR TRANSMITTED TO OTHERS FOR ANY PURPOSE NOT AUTHORIZED BY EDEN CRYOGENICS, LLC.

eden CRYOGENICS
8445 RAUSCH DRIVE
PLAIN CITY, OH 43064
614.873.3949
www.edencryogenics.com

DWN: MAB 11/3/2009
CHKR: JHM 12/28/2009
ENGR: JHM 12/28/2009
APPR:
EDR: 09-0377
DATE: 12/28/2009
SCALE: 1:5

ZONE	REV	DATE	CHANGED BY	EDR	REVISION DESCRIPTION
	-				

SIZE	DRAWING/PART NUMBER	SHEET	REV
B	BC-02128-5840	1 OF 2	-

TITLE
BC-02128
ASSEMBLY, CRYOGENIC OUTLET

Information Copy

PARTS LIST					
ITEM	ITEM QTY	PART NUMBER	DESCRIPTION	STOCK NUMBER	MATERIAL
1	1	BC-02128-0062	TEE, 1 NPS X SCH 10		Stainless Steel 304/304L ASME SA403
2	A/R	BC-02128-0071	CRYOGENIC OUTLET, PIPE, 1 NPS X SCH 10	PI-016-010-021	Stainless Steel 304/304L ASME SA312
3	1	BC-02128-0063	ELBOW, LR, 1 NPS X SCH 10		Stainless Steel 304/304L ASME SA403
4	1	SR-002-036-306	STAND-OFF RING, 1 NPS X 2 NPS X 11 GA.		Stainless Steel 304/304L ASTM A240
5	A/R	BC-02128-0072	CRYOGENIC OUTLET, PIPE, 2 NPS X SCH 10	PI-032-010-021	Stainless Steel 304/304L ASME SA312
6	1	BC-02128-0068	STAND-OFF RING, 2 NPS X 4.20 OD X 11 GA		Stainless Steel 304/304L ASTM A240
7	1	BC-02128-0061	WELD CAP, 1 NPS X SCH 10		Stainless Steel 304/304L ASME SA403
8	1	BC-02128-0070	CRYOGENIC INLET, PIPE, 4 NPS X SCH 40	PI-064-040-021	Stainless Steel 304/304L ASME SA312
9	1	BC-02128-0066	CRYOGENIC INLET, BELLOWS, 4 NPS		Stainless Steel 304/304L ASME SA321
10	A/R	BC-02128-0073	CRYOGENIC OUTLET, PIPE, 4 NPS X SCH 10	PI-064-010-021	Stainless Steel 304/304L ASME SA312
11	1	BC-02128-0069	MITERED ELBOW, PIPE, 4 NPS X SCH 10	PI-048-010-021	Stainless Steel 304/304L ASME SA312
12	A/R	BC-02128-0074	INSULATION, PRYOGEL XT		

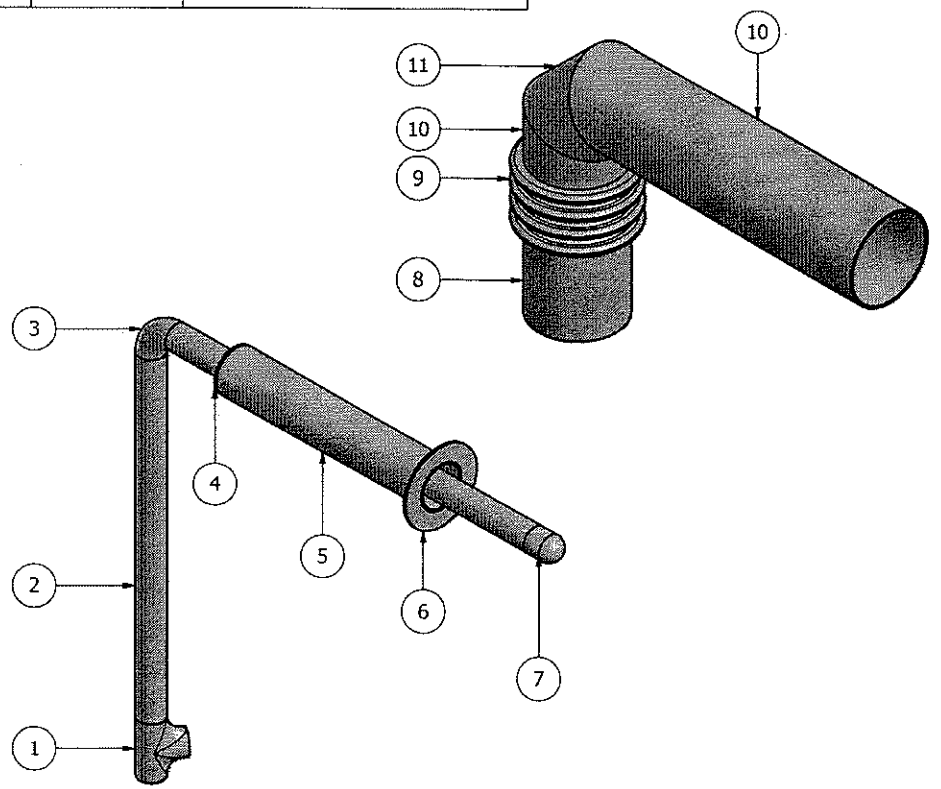

NOTE:

1. BREAK ALL SHARP EDGES AND CORNERS TO R.005.
2. "◇22" WELD PER EDEN SPEC BC101-001-022, LATEST REV.
3. ALL DIMENSIONS ARE FOR REFERENCE ONLY.
   3.1. FINAL DIMENSIONS TO BE VERIFIED AT NEXT ASSEMBLY.
4. FABRICATE PER EDEN SPEC. BC101-50-1001 SECT. 1-9.
5. ALL INNER LINE BUTT WELDS ARE TO BE INSPECTED TO CONFIRM FULL PENETRATION AS FOLLOWS:
   5.1 VEISUAL EXAMINATION OF ID WHERE POSSIBLE.
   5.2 WHERE (5.1) IS NOT POSSIBLE, RANDOM RADIOGRAPHICALLY INSPECT 5% OF ALL INNER LINE BUTT WELDS NOT INCLUDING THOSE EXAMINED VISUALLY, (THIS IS TO BE 5% OF THE ENTIRE JOB, NOT 5 % OF EACH SPOOL). USE SINGLE FILM ONLY.
6. INSULATION PROVIDED BY CUSTOMER.
   6.1 WRAP PIPE WITH TWO 10mm THICK LAYERS OF "PRYOGEL XT".

NOTES: (UNLESS OTHERWISE SPECIFIED)
1. DIMENSIONS ARE IN INCHES, CONFORMING TO ASME Y14.5-1994. ALL DIMENSIONS APPLY AFTER FINISH.
2. DE-BURR AND BREAK ALL SHARP EDGES AND CORNERS TO R.015 MAX.
3. SURFACE TEXTURE/FINISH 64 RMS

TOLERANCES:
X.X ± .030
X.XX ± .010
X.XXX ± .005
ANGULAR ± 1/2°

INFORMATION SHOWN ON THIS DRAWING IS PROPRIETARY AND THE SOLE PROPERTY OF EDEN CRYOGENICS, LLC AND IS NOT TO BE REPRODUCED, DISCLOSED OR TRANSMITTED TO OTHERS FOR ANY PURPOSE NOT AUTHORIZED BY EDEN CRYOGENICS, LLC.

eden CRYOGENICS
8445 RAUSCH DRIVE
PLAIN CITY, OH 43064
614.873.3949
www.edencryogenics.com

DWN: MAB 11/3/2009
CHKR: JHM 12/28/2009
ENGR: JHM 12/28/2009
APPR:

EDN: 09-0377
DATE: 12/28/2009
SCALE: 1:5

ZONE	REV	DATE	CHANGED BY	EDR
TITLE				

REVISION DESCRIPTION

BC-02128
ASSEMBLY, CRYOGENIC OUTLET

SIZE B
DRAWING/PART NUMBER BC-02128-5840
SHEET 2 OF 2
REV -

Information Copy
V3.10.15 130/424

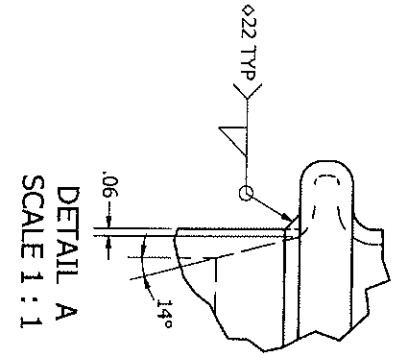

DETAIL A
SCALE 1 : 1

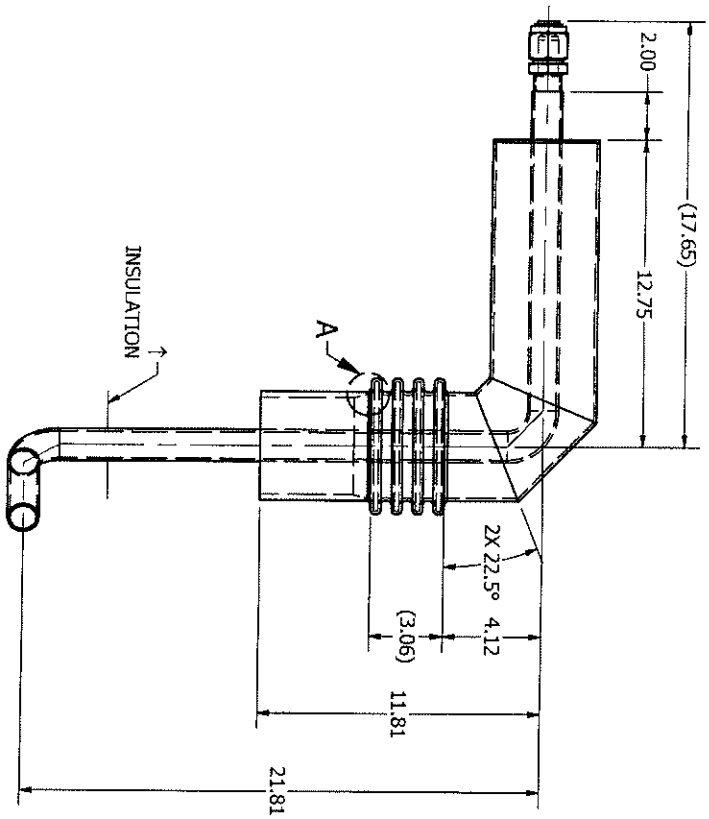

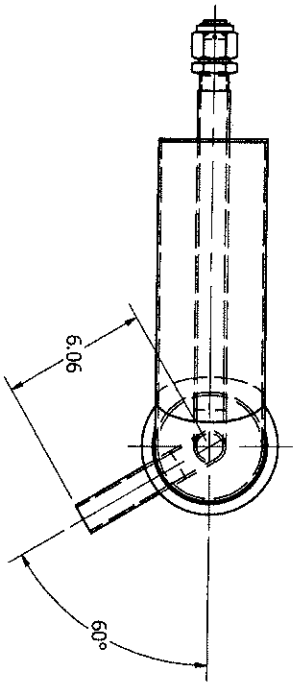

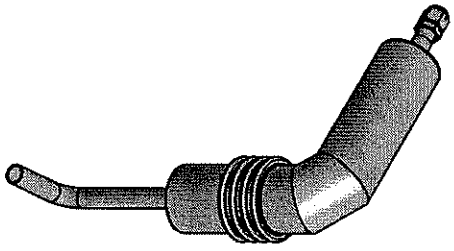

SCALE 1 : 8

REV STATUS	
SH	REV
1	-
2	-

NOTES: (UNLESS OTHERWISE SPECIFIED)
1. DIMENSIONS ARE IN INCHES, CONFORMING TO ASME Y14.5-1994. ALL DIMENSIONS APPLY AFTER FINISH.
2. DE-BURR AND BREAK ALL SHARP EDGES AND CORNERS TO R.015 MAX.
3. SURFACE TEXTURE/FINISH 64 RMS

TOLERANCES:
X.X ± .030
X.XX ± .010
X.XXX ± .005
ANGULAR ± 1/2°

INFORMATION SHOWN ON THIS DRAWING IS PROPRIETARY AND THE SOLE PROPERTY OF EDEN CRYOGENICS, LLC AND IS NOT TO BE REPRODUCED, DISCLOSED OR TRANSMITTED TO OTHERS FOR ANY PURPOSE NOT AUTHORIZED BY EDEN CRYOGENICS, LLC.

eden CRYOGENICS
8445 RAUSCH DRIVE
PLAIN CITY, OH 43064
614.873.3949
www.edencryogenics.com

DWN: MAB 11/3/2009
CHKR: JHM 12/28/2009
ENGR: JHM 12/28/2009
APPR:
EDR: 09-0377
DATE: 12/28/2009
SCALE: 1:4

ZONE	REV	DATE	CHANGED BY	EDR	REVISION DESCRIPTION
	-				

SIZE	DRAWING/PART NUMBER	SHEET	REV
B	BC-02128-5850	1 OF 2	-

TITLE
BC-02128
ASSEMBLY, REGENERATION GAS OUTLET

Information Copy

PARTS LIST					
ITEM	ITEM QTY	PART NUMBER	DESCRIPTION	STOCK NUMBER	MATERIAL
1	A/R	BC-02128-0081	PIPE, 1 NPS X SCH 10	PI-016-010-021	Stainless Steel 304/304L ASME SA312
2	2	BC-02128-0063	ELBOW, LR, 1 NPS X SCH 10		Stainless Steel 304/304L ASME SA403
3	1	SR-002-064-306	STAND-OFF RING, 1 NPS X 4 NPS X 11 GA		Stainless Steel 304/304L ASTM A240
4	1	BC-02128-0083	WELD GLAND, 1 OD		Stainless Steel 304/304L
5	1	BC-02128-0084	VCR, MALE NUT, 1 OD		Stainless Steel 316/316L
6	1	BC-02128-0085	VCR, CAP, 1 OD		Stainless Steel 316/316L
7	1	BC-02128-0070	CRYOGENIC INLET, PIPE, 4 NPS X SCH 40	PI-064-040-021	Stainless Steel 304/304L ASME SA312
8	1	BC-02128-0066	CRYOGENIC INLET, BELLOWS, 4 NPS		Stainless Steel 304/304L ASME SA321
9	A/R	BC-02128-0082	PIPE, 4 NPS X SCH 10	PI-064-010-021	Stainless Steel 304/304L ASME SA312
10	1	BC-02128-0069	MITERED ELBOW, PIPE, 4 NPS X SCH 10	PI-048-010-021	Stainless Steel 304/304L ASME SA312
11	A/R	BC-02128-0074	INSULATION, PRYOGEL XT		

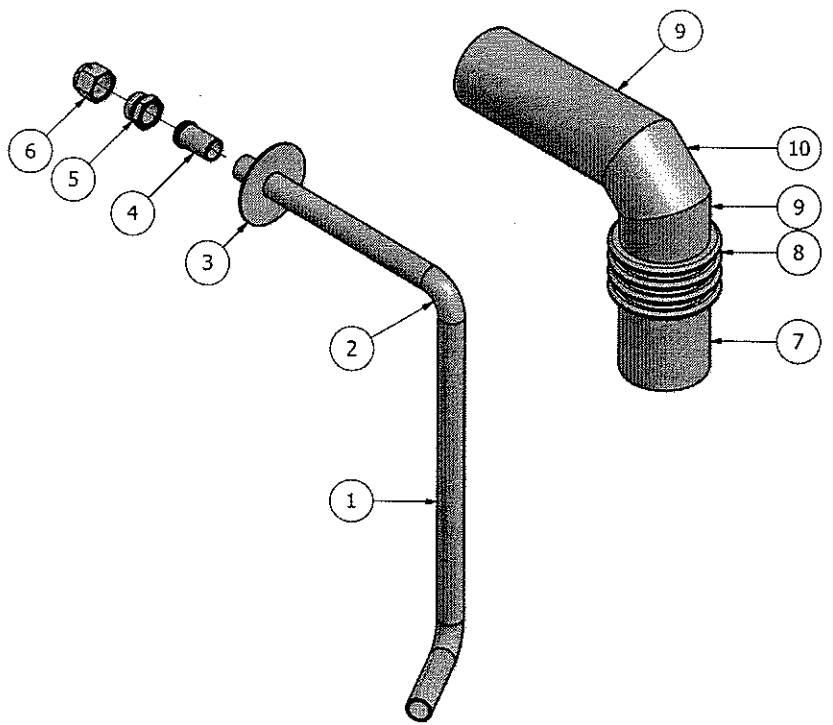

NOTE:

1. BREAK ALL SHARP EDGES AND CORNERS TO R.005.
2. "◇22" WELD PER EDEN SPEC BC101-001-022, LATEST REV.
3. ALL DIMENSIONS ARE FOR REFERENCE ONLY.
   3.1. FINAL DIMENSIONS TO BE VERIFIED AT NEXT ASSEMBLY.
4. FABRICATE PER EDEN SPEC. BC101-50-1001 SECT. 1-9.
5. ALL INNER LINE BUTT WELDS ARE TO BE INSPECTED TO CONFIRM FULL PENETRATION AS FOLLOWS:
   5.1 VEISUAL EXAMINATION OF ID WHERE POSSIBLE.
   5.2 WHERE (5.1) IS NOT POSSIBLE, RANDOM RADIOGRAPHICALLY INSPECT 5% OF ALL INNER LINE BUTT WELDS NOT INCLUDING THOSE EXAMINED VISUALLY, (THIS IS TO BE 5% OF THE ENTIRE JOB, NOT 5 % OF EACH SPOOL). USE SINGLE FILM ONLY.
6. INSULATION PROVIDED BY CUSTOMER.
   6.1 WRAP PIPE WITH TWO 10mm THICK LAYERS OF "PRYOGEL XT".

NOTES: (UNLESS OTHERWISE SPECIFIED)
1. DIMENSIONS ARE IN INCHES, CONFORMING TO ASME Y14.5-1994.
ALL DIMENSIONS APPLY AFTER FINISH.
2. DE-BURR AND BREAK ALL SHARP EDGES AND CORNERS TO 0.015 MAX.
3. SURFACE TEXTURE/FINISH 64 RMS

TOLERANCES:
X.X ± .030
X.XX ± .010
X.XXX ± .005
ANGULAR ± 1/2°

INFORMATION SHOWN ON THIS DRAWING IS PROPRIETARY AND THE PROPERTY OF EDEN CRYOGENICS, LLC AND IS NOT TO BE REPRODUCED, DISCLOSED OR TRANSMITTED TO OTHERS OR USED FOR ANY PURPOSE NOT AUTHORIZED BY EDEN CRYOGENICS, LLC.

DWN: MAB 11/3/2009
CHKR: JHM 12/28/2009
ENGR: JHM 12/28/2009
APPR:

eden CRYOGENICS
8445 RAUSCH DRIVE
PLAIN CITY, OH 43064
614.873.3949
www.edencryogenics.com

EDITL 09 0377
DATE: 12/28/2009
SCALE: 1:6

ZONE	REV	DATE	CHANGED BY	EDR	REVISION DESCRIPTION
	-				

TITLE
BC-02128
ASSEMBLY, REGENERATION GAS OUTLET

SIZE: B
DRAWING/PART NUMBER: BC-02128-5850
SHEET: 2 OF 2
REV: -

Information Copy

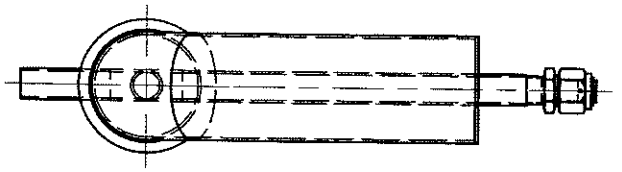

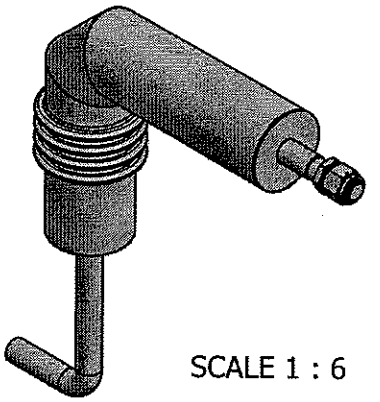

SCALE 1 : 6

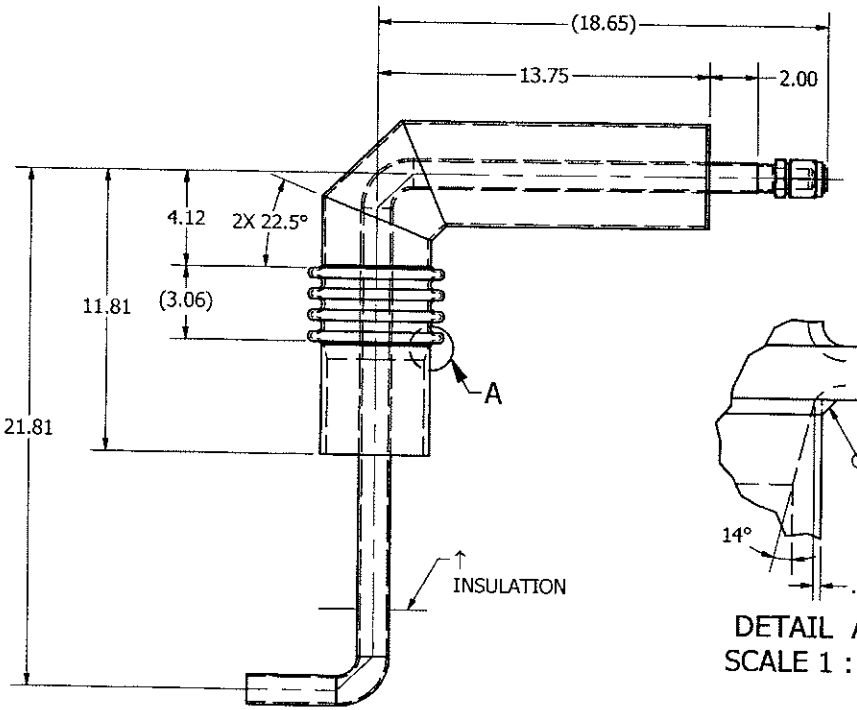

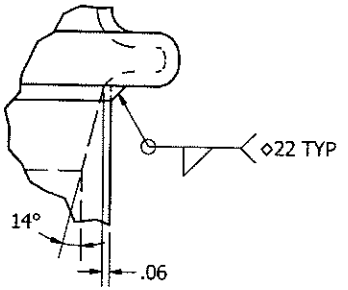

DETAIL A
SCALE 1 : 1

REV STATUS	
SH	REV
1	-
2	-

NOTES: (UNLESS OTHERWISE SPECIFIED)
1. DIMENSIONS ARE IN INCHES, CONFORMING TO ASME Y14.5-1994
ALL DIMENSIONS APPLY AFTER FINISH.
2. DE BURR AND BREAK ALL SHARP EDGES AND CORNERS TO R.015 MAX.
3. SURFACE TEXTURE/FINISH 64 RMS

TOLERANCES:
X.X ±.030
X.XX ±.010
X.XXX ±.005
ANGULAR ±1/2°

INFORMATION SHOWN ON THIS DRAWING IS PROPRIETARY AND THE SOLE PROPERTY OF EDEN CRYOGENICS, LLC AND IS NOT TO BE REPRODUCED, DISCLOSED OR TRANSMITTED TO ANY PERSON FOR ANY PURPOSE NOT AUTHORIZED BY EDEN CRYOGENICS, LLC.

eden CRYOGENICS
8445 RAUSCH DRIVE
PLAIN CITY, OH 43064
614.873.3949
www.edencryogenics.com

DWN: MAB 11/3/2009
CHKD: JKM 12/28/2009
ENGR: JKM 12/28/2009
APPR:

ECN#: 09-0377
DATE: 12/28/2009
SCALE: 1:5

ASMB.	REV	DATE	CHANGED BY	DSCR.
-				

TITLE
BC-02128
ASSEMBLY, REGENERATION GAS TNI FT

SIZE B
DRAWING/PART NUMBER BC-02128-5860
SHEET 1 OF 2
REV -

Information Copy
V3.10.15 133 / 424

PARTS LIST					
ITEM	ITEM QTY	PART NUMBER	DESCRIPTION	STOCK NUMBER	MATERIAL
1	A/R	BC-02128-0091	PIPE, 1 NPS X SCH 10	PI-016-010-021	Stainless Steel 304/304L ASME SA312
2	2	BC-02128-0063	ELBOW, LR, 1 NPS X SCH 10		Stainless Steel 304/304L ASME SA403
3	1	SR-002-064-306	STAND-OFF RING, 1 NPS X 4 NPS X 11 GA		Stainless Steel 304/304L ASTM A240
4	1	BC-02128-0083	WELD GLAND, 1 OD		Stainless Steel 304/304L
5	1	BC-02128-0084	VCR, MALE NUT, 1 OD		Stainless Steel 316/316L
6	1	BC-02128-0085	VCR, CAP, 1 OD		Stainless Steel 316/316L
7	1	BC-02128-0070	CRYOGENIC INLET, PIPE, 4 NPS X SCH 40	PI-064-040-021	Stainless Steel 304/304L ASME SA312
8	1	BC-02128-0066	CRYOGENIC INLET, BELLOWS, 4 NPS		Stainless Steel 304/304L ASME SA321
9	A/R	BC-02128-0092	PIPE, 4 NPS X SCH 10	PI-016-010-021	Stainless Steel 304/304L ASME SA312
10	1	BC-02128-0069	MITERED ELBOW, PIPE, 4 NPS X SCH 10	PI-048-010-021	Stainless Steel 304/304L ASME SA312
11	A/R	BC-02128-0074	INSULATION, PRYOGEL XT		

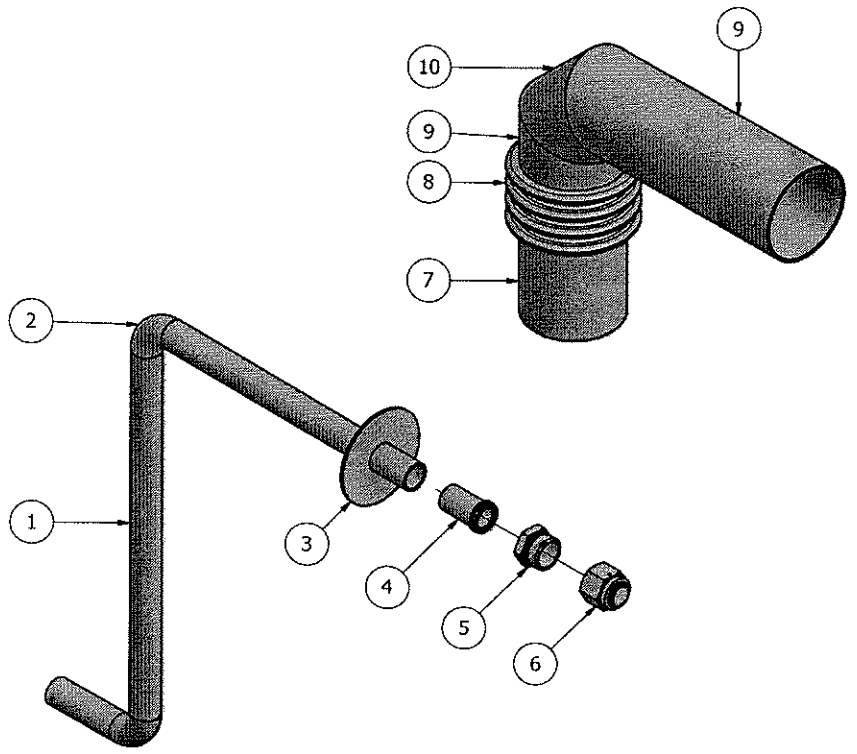

NOTE:

1. BREAK ALL SHARP EDGES AND CORNERS TO R.005.
2. "◇22" WELD PER EDEN SPEC BC101-001-022, LATEST REV.
3. ALL DIMENSIONS ARE FOR REFERENCE ONLY.
   3.1. FINAL DIMENSIONS TO BE VERIFIED AT NEXT ASSEMBLY.
4. FABRICATE PER EDEN SPEC. BC101-50-1001 SECT. 1-9.
5. ALL INNER LINE BUTT WELDS ARE TO BE INSPECTED TO CONFIRM FULL PENETRATION AS FOLLOWS:
   5.1 VEISUAL EXAMINATION OF ID WHERE POSSIBLE.
   5.2 WHERE (5.1) IS NOT POSSIBLE, RANDOM RADIOGRAPHICALLY INSPECT 5% OF ALL INNER LINE BUTT WELDS NOT INCLUDING THOSE EXAMINED VISUALLY, (THIS IS TO BE 5% OF THE ENTIRE JOB, NOT 5 % OF EACH SPOOL). USE SINGLE FILM ONLY.
6. INSULATION PROVIDED BY CUSTOMER.
   6.1 WRAP PIPE WITH TWO 10mm THICK LAYERS OF "PRYOGEL XT".

NOTES: (UNLESS OTHERWISE SPECIFIED)
1. DIMENSIONS ARE IN INCHES, CONFORMING TO ASME Y14.5-1994. ALL DIMENSIONS APPLY AFTER FINISH.
2. DE-BURR AND BREAK ALL SHARP EDGES AND CORNERS TO R.015 MAX.
3. SURFACE TEXTURE/FINISH 64 RMS

TOLERANCES:
X.X ±.030
X.XX ±.010
X.XXX ±.005
ANGULAR ± 1/2°

INFORMATION SHOWN ON THIS DRAWING IS PROPRIETARY AND THE EDEN PROPERTY OF EDEN CRYOGENICS, LLC AND IS NOT TO BE REPRODUCED, DISCLOSED OR TRANSMITTED TO OTHERS FOR ANY PURPOSE WITHOUT WRITTEN AUTHORIZATION OF EDEN CRYOGENICS, LLC.

eden CRYOGENICS
8445 RAUSCH DRIVE
PLAIN CITY, OH 43064
614.873.3949
www.edencryogenics.com

DWN: MAB 11/3/2009
CHK: JHM 12/28/2009
ENGR: JHM 12/28/2009
APPR:
EDR: 09-0377
DATE: 12/28/2009
SCALE: 1:5

ZONE	REV	DATE	CHANGED BY	EDR	REVISION DESCRIPTION
	-				

TITLE
BC-02128
ASSEMBLY, REGENERATION GAS INLET

SIZE B | DRAWING/PART NUMBER BC-02128-5860 | SHEET 2 OF 2 | REV -

Information Copy
v3.10.15 134/424

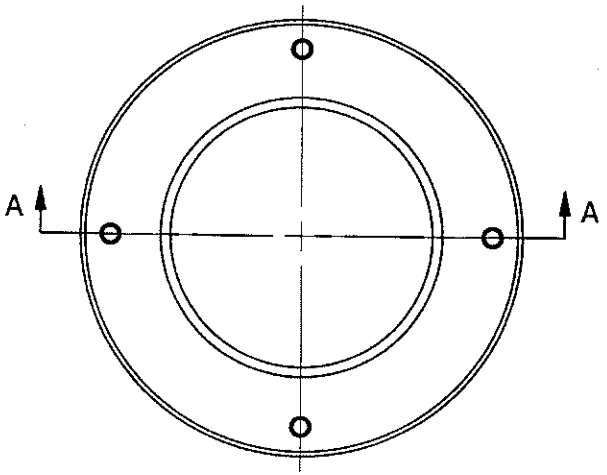

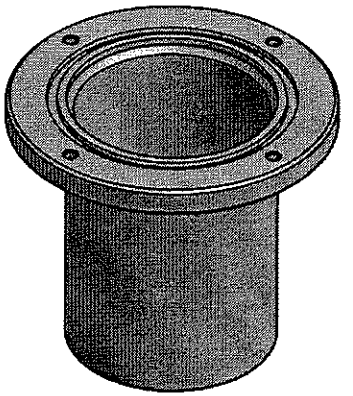

SCALE 1 : 2

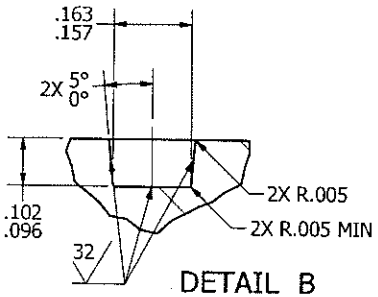

DETAIL B
SCALE 4 : 1

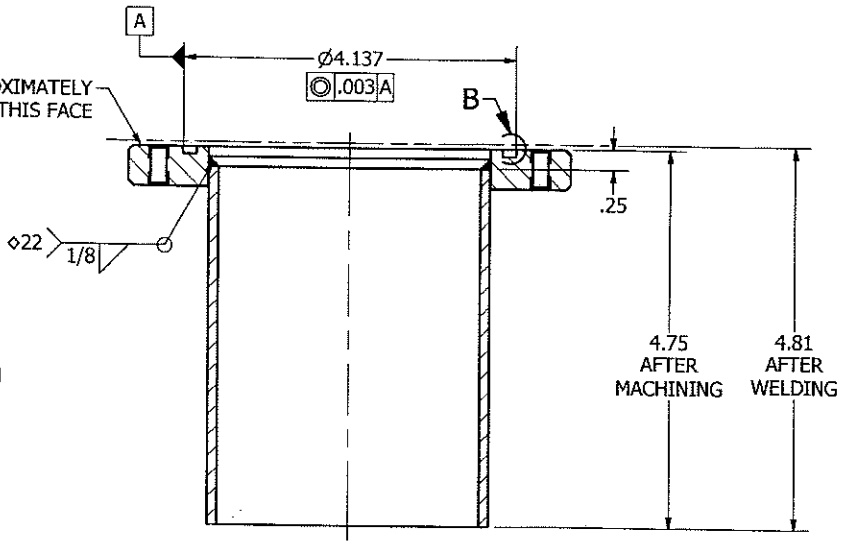

SECTION A-A
SCALE 2 : 3

REV STATUS	
SH	REV
1	-
2	-

NOTE:

1. BREAK ALL SHARP EDGES AND CORNERS TO R.005.
2. "◇22" WELD PER EDEN SPEC BC101-001-022, LATEST REV.

NOTES: (UNLESS OTHERWISE SPECIFIED)
1. DIMENSIONS ARE IN INCHES, CONFORMING TO ASME Y14.5-1994. ALL DIMENSIONS APPLY AFTER FINISH.
2. DE-BURR AND BREAK ALL SHARP EDGES AND CORNERS TO R.015 MAX.
3. SURFACE TEXTURE/FINISH 64 RMS

TOLERANCES:
X.X ±.030
X.XX ±.010
X.XXX ±.005
ANGULAR ±1/2°

INFORMATION SHOWN ON THIS DRAWING IS PROPRIETARY AND THE SOLE PROPERTY OF EDEN CRYOGENICS, LLC AND IS NOT TO BE REPRODUCED, DISCLOSED OR REPRODUCED WITHOUT WRITTEN AUTHORIZATION BY EDEN CRYOGENICS, LLC.

eden CRYOGENICS
8445 RAUSCH DRIVE
PLAIN CITY, OH 43064
614.873.3949
www.edencryogenics.com

DWN: MAS 12/23/2009
CHKD: JHM 12/28/2009
ENGR: JHM 12/28/2009
APPR:

EDR: 09-0377
DATE: 12/28/2009
SCALE: 2:3

ZONE	REV	DATE	CHANGED BY	REVISION DESCRIPTION
	-		EDR	

TITLE: BC-02128
WELDMENT, PARALLEL PLATE RELIEF, BOTTOM PLATE

SIZE: B
DRAWING/PART NUMBER: BC-02128-5875
SHEET: 1 OF 2
REV: -

Information Conv
v3.10.15 135 / 424

PARTS LIST					
ITEM	ITEM QTY	PART NUMBER	DESCRIPTION	STOCK NUMBER	MATERIAL
1	1	BC-02128-0101	PARALLEL PLATE RELIEF, PIPE, 3 NPS X SCH 10 X 4 1/2 LG	PI-048-010-021	Stainless Steel 304/304L ASTM A312
2	1	BC-02128-0102	PARALLEL PLATE RELIEF, BOTTOM PLATE		Stainless Steel 304/304L ASTM A240

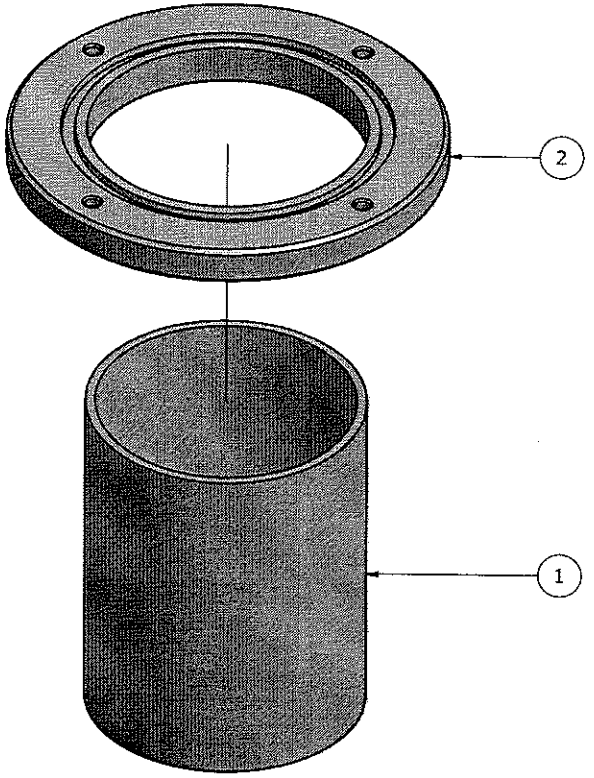

NOTES: (UNLESS OTHERWISE SPECIFIED)
1. DIMENSIONS ARE IN INCHES, CONFORMING TO ASME Y14.5-1994. ALL DIMENSIONS APPLY AFTER FINISH.
2. DE-BURR AND BREAK ALL SHARP EDGES AND CORNERS TO 0.015 MAX.
3. SURFACE TEXTURE/FINISH 64 RMS

TOLERANCES:
X.X ± .030
X.XX ± .010
X.XXX ± .005
ANGULAR ± 1/2°

eden CRYOGENICS
8445 RAUSCH DRIVE
PLAIN CITY, OH 43064
614.873.3949
www.edencryogenics.com

INFORMATION SHOWN ON THIS DRAWING IS PROPRIETARY AND THE SOLE PROPERTY OF EDEN CRYOGENICS, LLC AND IS NOT TO BE REPRODUCED, DISCLOSED OR TRANSMITTED TO OTHERS FOR ANY PURPOSE NOT AUTHORIZED BY EDEN CRYOGENICS, LLC.

DWN: MAG 12/23/2009
CHKD: JHH 12/28/2009
ENGR: JHH 12/28/2009
APPR:

EDK: 09-0377
DATE: 12/28/2009
SCALE: 2:3

TITLE
BC-02128
WELDMENT, PARALLEL PLATE RELIEF, BOTTOM PLATE

SIZE: B
DRAWING/PART NUMBER: BC-02128-5875
SHEET: 2 OF 2
REV:

Information Copy
v3.10.15 136 / 424

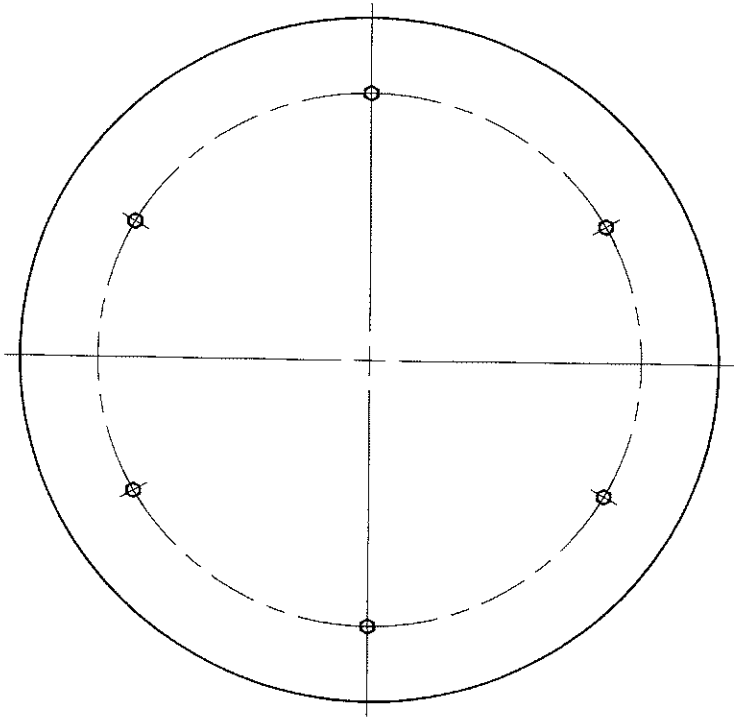

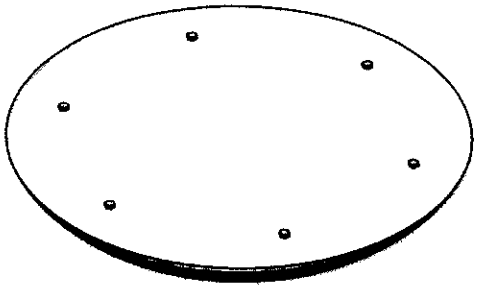

SCALE 1 : 6

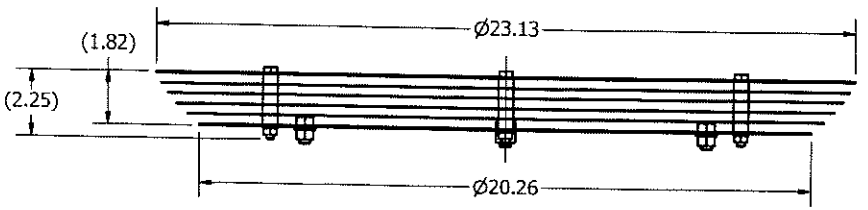

REV STATUS	
SH	REV
1	-
2	-

NOTE:

1. BREAK ALL SHARP EDGES AND CORNERS TO R.005.
2. VENDOR TO MARK PART NUMBER ON HEAT SHIELDS.

ZONE	REV	DATE	CHANGED BY	EDR	REVISION DESCRIPTION
	-				

TITLE: BC-02128 ASSEMBLY, HEAT SHIELDS, BOTTOM

NOTES: (UNLESS OTHERWISE SPECIFIED)
1. DIMENSIONS ARE IN INCHES, CONFORMING TO ASME Y14.5-1994. ALL DIMENSIONS APPLY AFTER FINISH.
2. DE-BURR AND BREAK ALL SHARP EDGES AND CORNERS TO R.015 MAX.
3. SURFACE TEXTURE/FINISH 64 RMS

TOLERANCES:
X.X ± .030
X.XX ± .010
X.XXX ± .005
ANGULAR ± 1/2°

INFORMATION SHOWN ON THIS DRAWING IS PROPRIETARY AND THE SOLE PROPERTY OF EDEN CRYOGENICS, LLC, AND IS NOT TO BE REPRODUCED OR DISCLOSED TO OTHERS FOR ANY PURPOSE NOT AUTHORIZED IN WRITING BY EDEN CRYOGENICS, LLC.

DWN: MAB 12/23/2009
CHKR: JHM 12/28/2009
ENGR: JHM 12/28/2009
APPR:

eden CRYOGENICS
8445 RAUSCH DRIVE
PLAIN CITY, OH 43064
614.873.3949
www.edencryogenics.com

EDR: 09-0377
DATE: 12/28/2009
SCALE: 1:4

SIZE: B
DRAWING/PART NUMBER: BC-02128-5890
SHEET: 1 OF 2
REV: -

Information Copy
v3.10.15 137/424

PARTS LIST					
ITEM	ITEM QTY	PART NUMBER	DESCRIPTION	STOCK NUMBER	MATERIAL
1	6	FA-004-112-167	HEX BOLT - INCH 1/4-20 UNC - 2.25		Stainless Steel 18-8
2	1	BC-02128-0021	BOTTOM HEAT SHIELD		Aluminum-6061 ASTM B209
3	30	BC-02128-0122	SPACER	92320A663	Stainless Steel 18-8
4	1	BC-02128-0022	BOTTOM HEAT SHIELD		Aluminum-6061 ASTM B209
5	1	BC-02128-0023	BOTTOM HEAT SHIELD		Aluminum-6061 ASTM B209
6	1	BC-02128-0024	BOTTOM HEAT SHIELD		Aluminum-6061 ASTM B209
7	1	BC-02128-0025	BOTTOM HEAT SHIELD		Aluminum-6061 ASTM B209
8	4	FA-006-112-105	HEX BOLT - INCH 3/8-16 UNC - 5/8		Stainless Steel 18-8
9	1	BC-02128-0026	BOTTOM HEAT SHIELD		Aluminum-6061 ASTM B209
10	6	FA-004-812-030	SPRING LOCK WASHER, 3/8		Stainless Steel 18-8
11	6	FA-004-812-006	HEX NUT - INCH 1/4 - 20 UNC		Stainless Steel 304/304L ASTM A194 GR 8
12	4	FA-006-812-030	SPRING LOCK WASHER, 3/8		Stainless Steel 18-8
13	4	FA-006-812-006	HEX NUT - INCH 3/8 - 16 UNC		Stainless Steel 304/304L ASTM A194 GR 8

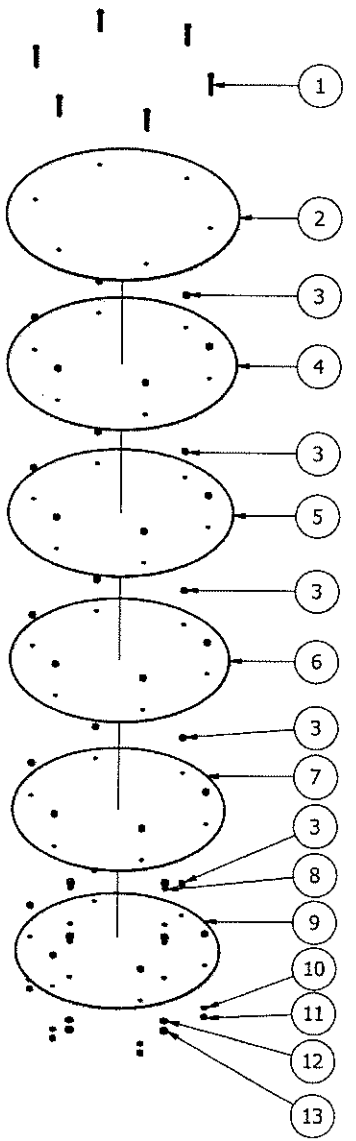

NOTES: (UNLESS OTHERWISE SPECIFIED)
1. DIMENSIONS ARE IN INCHES, CONFORMING TO ASME Y14.5-1994. ALL DIMENSIONS APPLY AFTER FINISH.
2. DE-BURR AND BREAK ALL SHARP EDGES AND CORNERS TO 0.015 MAX.
3. SURFACE TEXTURE/FINISH 64 RMS

TOLERANCES:
X.X ± .030
X.XX ± .010
X.XXX ± .005
ANGULAR ± 1/2°

INFORMATION HOWEVER ON THIS DRAWING IS PROPRIETARY AND THE SOLE PROPERTY OF EDEN CRYOGENICS, LLC AND IS NOT TO BE DISCLOSED, REPRODUCED OR TRANSMITTED TO OTHERS FOR ANY PURPOSE NOT AUTHORIZED BY EDEN CRYOGENICS, LLC.

eden CRYOGENICS
8445 RAUSCH DRIVE
PLAIN CITY, OH 43064
614.873.3949
www.edencryogenics.com

DWN: MAB 12/23/2009
CHKR: JHM 12/28/2009
ENGR: JHM 12/28/2009
APR:

ECR: 09-0377
DATE: 12/28/2009
SCALE: 1:12

TITLE
BC-02128
ASSEMBLY, HEAT SHIELDS, BOTTOM

SIZE: B
DRAWING/PART NUMBER: BC-02128-5890
SHEET 2 OF 2
REV

Information Copy
v3.10.15 138./424

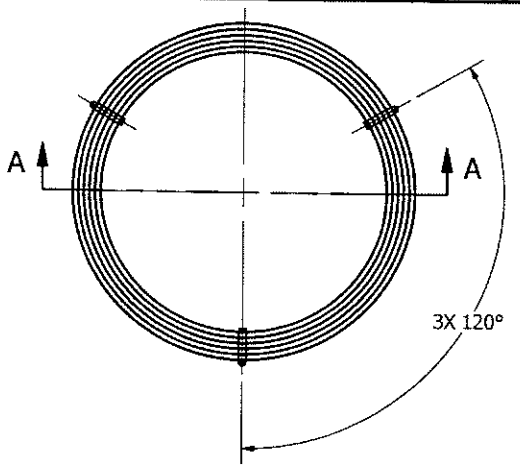

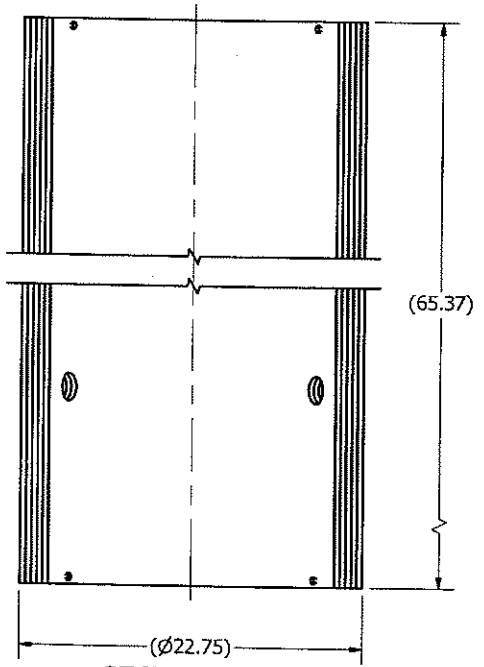

SECTION A-A
SCALE 1 : 8

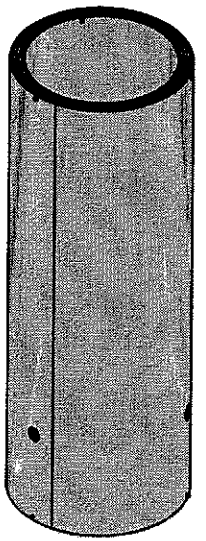

SCALE 1 : 15

REV STATUS	
SH	REV
1	-
2	-

NOTE:

1. BREAK ALL SHARP EDGES AND CORNERS TO R.005.
2. VENDOR TO MARK PART NUMBER ON HEAT SHIELDS.

NOTES: (UNLESS OTHERWISE SPECIFIED)
1. DIMENSIONS ARE IN INCHES, CONFORMING TO ASME Y14.5-1994. ALL DIMENSIONS APPLY AFTER FINISH.
2. DE-BURR AND BREAK ALL SHARP EDGES AND CORNERS TO R.015 MAX.
3. SURFACE TEXTURE/FINISH 64 RMS

TOLERANCES:
X.X ±.030
X.XX ±.010
X.XXX ±.005
ANGULAR ± 1/2°

INFORMATION FROM ON THIS DRAWING IS PROPRIETARY AND THE SOLE PROPERTY OF EDEN CRYOGENICS, LLC AND IS NOT TO BE REPRODUCED, DISCLOSED OR TRANSMITTED TO OTHERS FOR ANY PURPOSE NOT AUTHORIZED BY EDEN CRYOGENICS, LLC.

eden CRYOGENICS
8445 RAUSCH DRIVE
PLAIN CITY, OH 43064
614.873.3949
www.edencryogenics.com

DWN: MAB 12/21/2009
CHKD: JHM 12/28/2009
ENGR: JHM 12/28/2009
APPR:
EOR: 09-0377
DATE: 12/28/2009
SCALE: 1:8

ZONE	REV	DATE	REVISION DESCRIPTION	EOR
-	-	1-JAN-2010		EOR

TITLE
BC-02128
ASSEMBLY, HEAT SHIELDS, SIDE

SIZE B
DRAWING/PART NUMBER BC-02128-5900
SHEET 1 OF 2
REV -

Information Copy
v3.10.15 139 / 424

PARTS LIST					
ITEM	ITEM QTY	PART NUMBER	DESCRIPTION	STOCK NUMBER	MATERIAL
1	6	FA-004-112-167	HEX BOLT - INCH 1/4-20 UNC - 2.25		Stainless Steel 18-8
2	30	BC-02128-0122	SPACER	92320A663	Stainless Steel 18-8
3	6	FA-004-812-006	HEX NUT - INCH 1/4 - 20 UNC		Stainless Steel 304/304L ASTM A194 GR 8
4	1	BC-02128-0031	SIDE HEAT SHIELD		Aluminum-6061 ASTM B209
5	1	BC-02128-0032	SIDE HEAT SHIELD		Aluminum-6061 ASTM B209
6	1	BC-02128-0033	SIDE HEAT SHIELD		Aluminum-6061 ASTM B209
7	1	BC-02128-0034	SIDE HEAT SHIELD		Aluminum-6061 ASTM B209
8	1	BC-02128-0035	SIDE HEAT SHIELD		Aluminum-6061 ASTM B209
9	1	BC-02128-0036	SIDE HEAT SHIELD		Aluminum-6061 ASTM B209

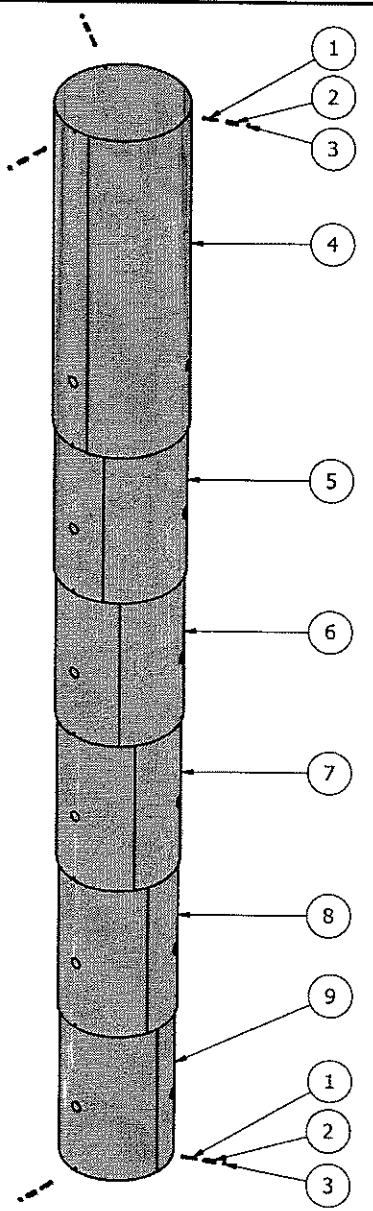

NOTES: (UNLESS OTHERWISE SPECIFIED)
1. DIMENSIONS ARE IN INCHES, CONFORMING TO ASME Y14.5-1994.
ALL DIMENSIONS APPLY AFTER FINISH.
2. DE-BURR AND BREAK ALL SHARP EDGES AND CORNERS TO R.015 MAX.
3. SURFACE TEXTURE/FINISH 64 RMS

TOLERANCES:
X.X ±.030
X.XX ±.010
X.XXX ±.005
ANGULAR ± 1/2°

INFORMATION SHOWN ON THIS DRAWING IS PROPRIETARY AND THE SOLE PROPERTY OF EDEN CRYOGENICS, LLC AND IS NOT TO BE REPRODUCED OR DISCLOSED OR TRANSMITTED TO OTHERS FOR ANY PURPOSE NOT AUTHORIZED BY EDEN CRYOGENICS, LLC.

eden CRYOGENICS
8445 RAUSCH DRIVE
PLAIN CITY, OH 43064
614.873.3949
www.edencryogenics.com

DWN: MAB 12/21/2009
CHKD: JHM 12/28/2009
ENGR: JHM 12/28/2009
APPR:
EDR: 09-0377
DATE: 12/28/2009
SCALE: 1:20

TITLE
BC-02128
ASSEMBLY, HEAT SHIELDS, SIDE

SIZE B
DRAWING/PART NUMBER BC-02128-5900
SHEET 2 OF 2
REV

Information Copy

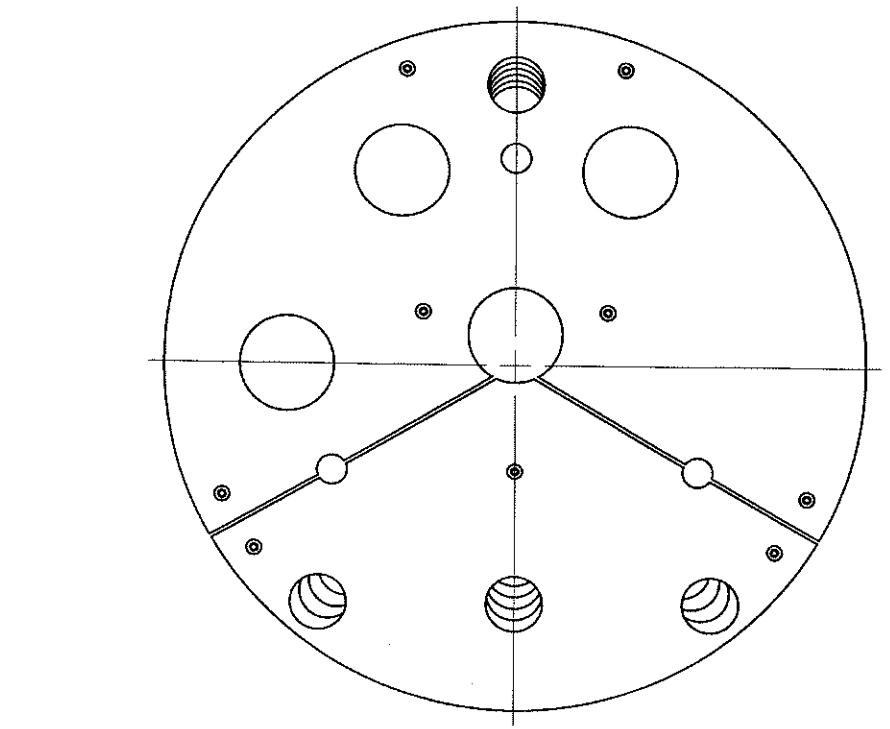

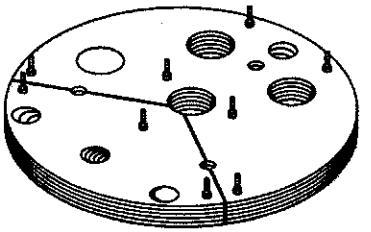

SCALE 1 : 8

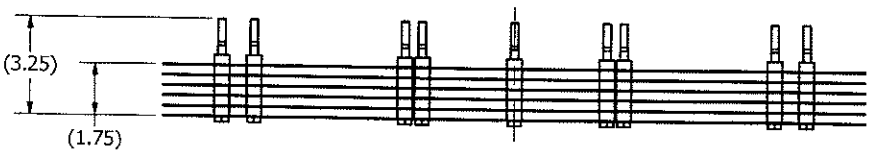

REV STATUS	
SH	REV
1	-
2	-

NOTE:

1. BREAK ALL SHARP EDGES AND CORNERS TO R.005.
2. VENDOR TO MARK PART NUMBER ON HEAT SHIELDS.

NOTES: (UNLESS OTHERWISE SPECIFIED)
1. DIMENSIONS ARE IN INCHES, CONFORMING TO ASME Y14.5-1994. ALL DIMENSIONS APPLY AFTER FINISH.
2. DE-BURR AND BREAK ALL SHARP EDGES AND CORNERS TO R.015 MAX.
3. SURFACE TEXTURE/FINISH 64 RMS

TOLERANCES:
X.X ±.030
X.XX ±.010
X.XXX ±.005
ANGULAR ± 1/2°

INFORMATION WITHIN OR ON THIS DRAWING IS PROPRIETARY AND THE SOLE PROPERTY OF EDEN CRYOGENICS, LLC AND IS NOT TO BE REPRODUCED OR DISCLOSED OR TRANSMITTED TO OTHERS FOR ANY PURPOSE NOT AUTHORIZED BY EDEN CRYOGENICS, LLC

DWN: MAB 12/21/2009
CHKD: JHM 12/28/2009
ENGR: JHM 12/28/2009
APPR:

eden CRYOGENICS
8445 RAUSCH DRIVE
PLAIN CITY, OH 43064
614.873.3949
www.edencryogenics.com

EDR: 09-0377
DATE: 12/28/2009
SCALE: 1:4

ZONE	REV	DATE	CHANGED BY	EDR	REVISION DESCRIPTION

TITLE: BC-02128
ASSEMBLY, HEAT SHIELDS, TOP

SIZE: B
DRAWING/PART NUMBER: BC-02128-5910
SHEET: 1 of 2
REV: -

Information Copy
v3.10.15 141/424

PARTS LIST					
ITEM	ITEM QTY	PART NUMBER	DESCRIPTION	STOCK NUMBER	MATERIAL
1	9	FA-004-112-171	HEX BOLT - INCH, 1/4-20 UNC X 3 1/4 LG		Stainless Steel 18-8
2	1	BC-02128-0015	TOP HEAT SHIELD		Aluminum-6061 ASTM B209
3	54	BC-02128-0122	SPACER	92320A663	Stainless Steel 18-8
4	1	BC-02128-0014	TOP HEAT SHIELD		Aluminum-6061 ASTM B209
5	1	BC-02128-0013	TOP HEAT SHIELD		Aluminum-6061 ASTM B209
6	1	BC-02128-0012	TOP HEAT SHIELD		Aluminum-6061 ASTM B209
7	1	BC-02128-0011	TOP HEAT SHIELD		Aluminum-6061 ASTM B209
8	1	BC-02128-0010	TOP HEAT SHIELD		Aluminum-6061 ASTM B209

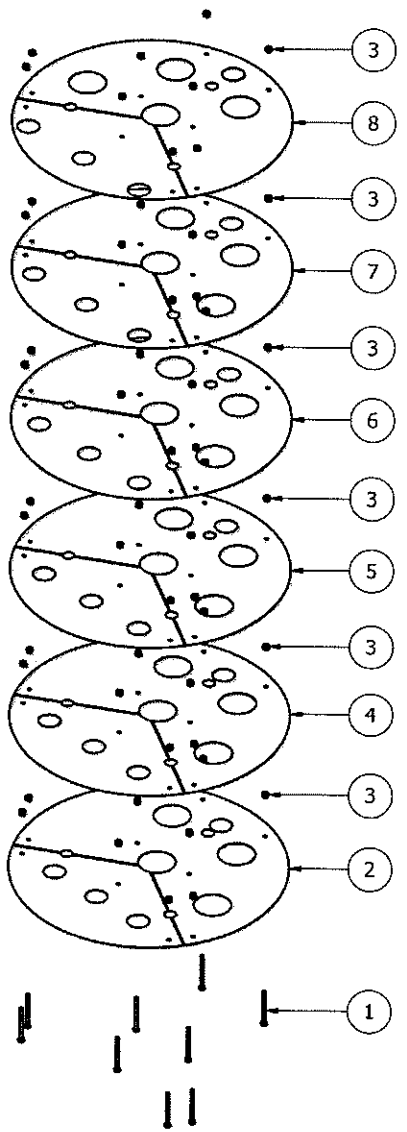

NOTES: (UNLESS OTHERWISE SPECIFIED)
1. DIMENSIONS ARE IN INCHES, CONFORMING TO ASME Y14.5-1994. ALL DIMENSIONS APPLY AFTER FINISH.
2. DE-BURR AND BREAK ALL SHARP EDGES AND CORNERS TO R.015 MAX.
3. SURFACE TEXTURE/FINISH 64 RMS

TOLERANCES:
X.X ± .030
X.XX ± .010
X.XXX ± .005
ANGULAR ± 1/2°

INFORMATION SHOWN ON THIS DRAWING IS PROPRIETARY AND THE SOLE PROPERTY OF EDEN CRYOGENICS, LLC AND SHALL NOT BE REPRODUCED, DISCLOSED OR TRANSMITTED TO OTHERS FOR ANY PURPOSE WITHOUT WRITTEN APPROVAL AT EDEN CRYOGENICS, LLC.

8445 RAUSCH DRIVE
PLAIN CITY, OH 43064
614.873.3949
www.edencryogenics.com

DWN: MAB 12/21/2009
CHKR: JHM 12/28/2009
DKR: JHM 12/28/2009
APPR:

EDR: 09-0377
DATE: 12/28/2009
SCALE: 1:10

TITLE
BC-02128
ASSEMBLY, HEAT SHIELDS, TOP

SIZE B
DRAWING/PART NUMBER BC-02128-5910
SHEET 2 OF 2
REV

Proprietary Copy

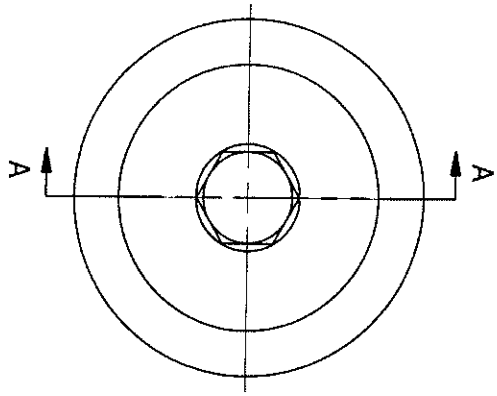

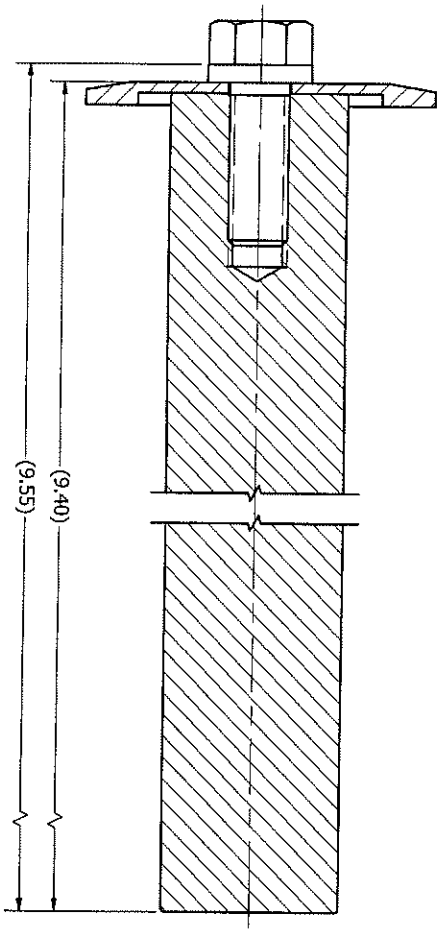

SECTION A-A
SCALE 1 : 1

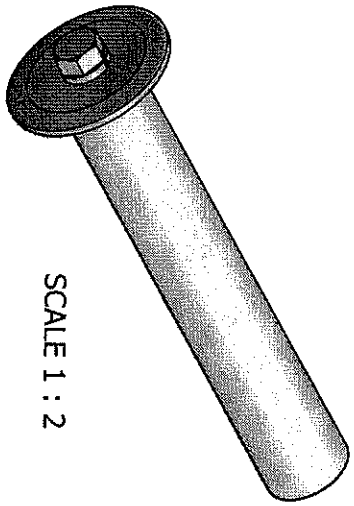

SCALE 1 : 2

NOTE:

BREAK ALL SHARP EDGES AND CORNERS TO R.005.

REV STATUS	
SH	REV
1	-
2	-

NOTES: (UNLESS OTHERWISE SPECIFIED)

1. DIMENSIONS ARE IN INCHES, CONFORMING TO ASME Y14.5-1994. ALL DIMENSIONS APPLY AFTER FINISH.
2. DE-BURR AND BREAK ALL SHARP EDGES AND CORNERS TO R.015 MAX.
3. SURFACE TEXTURE/FINISH 64 RMS

TOLERANCES:
X.X ±.030
X.XX ±.010
X.XXX ±.005
ANGULAR ± 1/2°

INFORMATION SHOWN ON THIS DRAWING IS PROPRIETARY AND THE SOLE PROPERTY OF EDEN CRYOGENICS, LLC AND IS NOT TO BE REPRODUCED, DISCLOSED OR TRANSMITTED TO OTHERS FOR ANY PURPOSE NOT AUTHORIZED BY EDEN CRYOGENICS, LLC.

eden CRYOGENICS
8445 RAUSCH DRIVE
PLAIN CITY, OH 43064
614.873.3949
www.edencryogenics.com

DWN: MAB 12/23/2009
CHKR: JHM 12/28/2009
ENGR: JHM 12/28/2009
APPR:
EDR: 09-0377
DATE: 12/28/2009
SCALE: 1:1

ZONE	REV	DATE	CHANGED BY	EDR	REVISION DESCRIPTION
	-	-			

SIZE	DRAWING/PART NUMBER	SHEET	REV
B	BC-02128-5920	1 OF 2	-

TITLE
BC-02128
SHIPPING PLUG

Information Copy

PARTS LIST					
ITEM	ITEM QTY	PART NUMBER	DESCRIPTION	STOCK NUMBER	MATERIAL
1	1	BC-02128-0113	SHIPPING SUPPORT, PLUG		Aluminum-6061
2	1	BC-02128-0114	FLANGE, BLANK, NW50, MODIFIED, MDC VACUUM PRODUCTS	712003	Stainless Steel 304/304L
3	1	FA-008-812-031	SPRING LOCK WASHER, 1/2		Stainless Steel 18-8
4	1	FA-008-112-312	HEX BOLT - INCH 1/2-13 UNC - 1 1/2		Stainless Steel 18-8

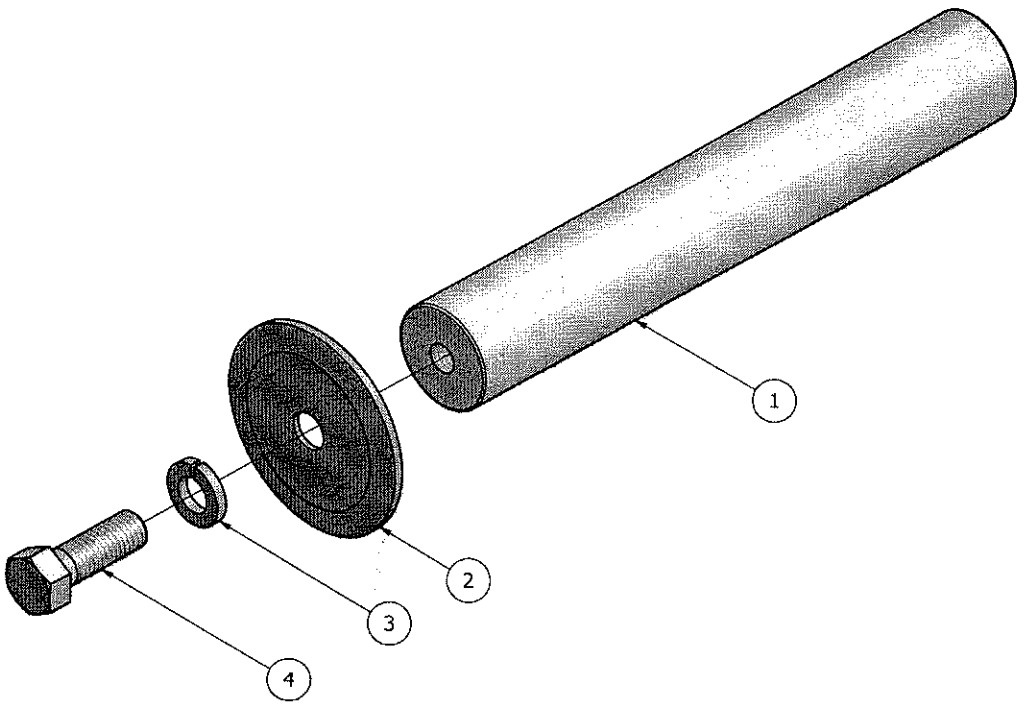

NOTES: (UNLESS OTHERWISE SPECIFIED)
1. DIMENSIONS ARE IN INCHES, CONFORMING TO ASME Y14.5-1994.
ALL DIMENSIONS APPLY AFTER FINISH.
2. DE-BURR AND BREAK ALL SHARP EDGES AND CORNERS TO R.015 MAX.
3. SURFACE TEXTURE/FINISH 64 RMS

TOLERANCES:
X.X ± .030
X.XX ± .010
X.XXX ± .005
ANGULAR ± 1/2

INFORMATION SHOWN ON THIS DRAWING IS PROPRIETARY AND THE SOLE PROPERTY OF EDEN CRYOGENICS, LLC. IMPLIED RIGHTS TO BE REPRODUCED, PUBLISHED OR TRANSMITTED TO OTHERS FOR ANY PURPOSE WITHOUT AUTHORIZED WRITTEN CONSENT OF EDEN CRYOGENICS, LLC.

eden CRYOGENICS
8445 RAUSCH DRIVE
PLAIN CITY, OH 43064
614.873.3949
www.edencryogenics.com

DWN: MJB 12/23/2009
CHKD: JHM 12/28/2009
ENGR: JHM 12/28/2009
APPR:
EDR: 09-0377
DATE: 12/28/2009
SCALE: 2:3

TITLE
BC-02128
SHIPPING PLUG

SIZE B
DRAWING/PART NUMBER BC-02128-5920
SHEET 2 OF 2
REV

Information Copy
v3.10.15 144 / 424

PAGE NO.	HEAT NUMBER	PO NUMBER	DESCRIPTION	AREA
	CRYO INLET			
1	4130-0607	BC-1134	3" NPS PIPE	RELIEF PLATE
2	8A1219	BC-2972	4" NPS PIPE X SCH 40	CRYO INLET
3	391025	BC-3276	4" NPS PIPE X SCH 10	CRYO INLET
4	4110-0807	BC-2674	1" NPS PIPE	CRYO INLET
5	4110-0810	BC-2674	1" NPS PIPE	CRYO INLET
6	041126	BC-3312	2" NPS PIPE	CRYO INLET
7	I-827466	BC-2387	4" BELLOWS	CRYO INLET
8	4TK4	BC-3350	STAND-OFF RING	CRYO INLET
9	8BCC1	BC-3276	1" EBLOW	CRYO INLET
10	096178V21	BC-3276	1" TEE	CRYO INLET
11	T74877	BC-2845	1" CAP	CRYO INLET
12	S22320	BC-3779	1" CAP	CRYO INLET
	GAS OUTLET			
2	8A1219	BC-2972	4" NPS PIPE X SCH 40	GAS OUTLET
3	391025	BC-3276	4" NPS PIPE X SCH 10	GAS OUTLET
13	829979	BC-3276	1" NPS PIPE	GAS OUTLET
7	I-827466	BC-2387	4" BELLOWS	GAS OUTLET
8	4TK4	BC-3350	STAND-OFF RING	GAS OUTLET
4	4110-0807	BC-2674	1" NPS PIPE	GAS OUTLET
9	8BCC1	BC-3276	1" EBLOW	GAS OUTLET
	CRYO OUTLET			
2	8A1219	BC-2972	4" NPS PIPE X SCH 40	CRYO OUTLET
3	391025	BC-3276	4" NPS PIPE X SCH 10	CRYO OUTLET
13	829979	BC-3276	1" NPS PIPE	CRYO OUTLET
6	041126	BC-3312	2" NPS PIPE X SCH 10	CRYO OUTLET
7	I-827466	BC-2387	4" BELLOWS	CRYO OUTLET
8	4TK4	BC-3350	STAND-OFF RING	CRYO OUTLET
15	T36378	BC-3276	1" NPS PIPE	CRYO OUTLET
9	8BCC1	BC-3276	1" EBLOW	CRYO OUTLET
14	O181	BC-3276	1" CAP	CRYO OUTLET
10	096178V21	BC-3276	1" TEE	CRYO OUTLET
16	364604	BC-3767	1" TEE	CRYO OUTLET
	GAS OUTLET			
2	8A1219	BC-2972	4" NPS PIPE X SCH 40	GAS OUTLET
3	391025	BC-3276	4" NPS PIPE X SCH 10	GAS OUTLET
13	829979	BC-3276	1" NPS PIPE	GAS OUTLET

7	I-827466	BC-2387	4" BELLOWS	GAS OUTLET
8	4TK4	BC-3350	STAND-OFF RING	GAS OUTLET
9	8BCC1	BC-3276	1" EBLOW	GAS OUTLET

OUTER VESSEL

17	ZT0081	BC-3276	24" NPS RFSO FLANGE	FLANGE
18	BB070102	BC-3276	24" NPS WELD CAP	WELD CAP
19	BB070021	BC-3276	24" NPS WELD CAP	WELD CAP
20	YX0806-410	BC-3276	2" OD TUBE	EXT TUBE
21	4HK1	BC-3176	3" X 3" ANGLE	VESSEL LEGS
22	231105	BC-3175	1/2" PLATE	FEET
23	YTB71241	BC-3276	24" NPS BLIND FLANGE	TOP FLANGE
24	5EX7	BC-3420	6"X6" PLATE	LIFT PLATES
25	482863	BC-3276	24" NPS PIPE	SHELL

INNER VESSEL

22	231105	BC-3175	PLATE STOCK	HANGERS
14	O181	BC-3276	1" WELD CAP	INLET / OUTLET
26	139308	BC-3276	3" NPS WELD CAP	FILL PORT
27	BB070055	BC-3276	12" NPS WELD CAP	INNER VESSEL
13	829979	BC-3276	1" PIPE	INLET / OUTLET
28	391025	BC-3276	3" NPS PIPE	FILL PORT
29	280463	BC-3276	12" NPS PIPE	INNER VESSEL
30	1.4404	BC-3279	FILTER	FILTER
31	3C730	BC-3283	THERMOWELL	THEMOWELLS
32	156654/252208	BC-3427	BAR	FILTER SUPPORTS

Kanzen Tetsu Sdn Bhd
Company No. 190087-W
P.O. Box 7272, Lot 4 Persiaran Perusahaan
Seksyen 23, 40708 Shah Alam, Selangor Darul Ehsan, Malaysia.
Tel: (603) 5542 1400 Fax: (603) 5541 9777
http://www.kanzen-tetsu.com e-mail: info@kanzen-tetsu.com

MILL TEST REPORT

EN 10204 3.1

CERTIFICATE NO : 9126596 (1) DATE : 17/07/2006

CONTRACT NO : 9106544
SHIPPER : KANZEN TETSU SDN BHD

ORDER NO. : P257370
CUSTOMER : MERIT BRASS
(CONSIGNEE)
PRODUCT : WELDED AUSTENITIC STAINLESS STEEL
SPECIFICATION : PIPES ASTM A312/ASME SA312M-04b

SIZE	QTY PCS	TOTAL LENGTH	WEIGHT KGS	HEAT NO	TENSILE TEST Y.S. N/mm²	T.S. N/mm²	EL %	HARDNESS TEST (HRB)	HYDROSTATIC TEST MPa	FLATTENING TEST	CORROSION TEST ASTM A262 PRACTICE E	CHEMICAL COMPOSITION (%) C (X 100)	Si (X 100)	Mn (X 100)	P (X 1000)	S (X 1000)	Ni (X 100)	Cr (X 100)	Mo	
					205	515	35					-	-	-	-	-	800	1800	-	MIN
												3.5	100	200	45	30	1300	2000	-	MAX
TP304/304L X 1-1/2" X SCH10S PRODUCT CODE: I5724	25	-	479	4115-0607	331	685	53	84	12.4	PASSED	PASSED	1.8	44	127	34	2	801	1836	-	
TP304/304L X 2" X SCH10S PRODUCT CODE: I5732	75	-	1817	4120-0607	369	688	51	88	9.7	PASSED	PASSED	1.8	44	127	34	2	801	1836	-	
TP304/304L X 2-1/2" X SCH10S PRODUCT CODE: I5740	25	-	810	4125-0507	321	692	51	83	9.0	PASSED	PASSED	1.6	42	139	29	2	802	1818	-	
TP304/304L X 3" X SCH10S PRODUCT CODE: I5748	30	-	1194	4130-0607	344	658	53	88	7.6	PASSED	PASSED	1.8	50	126	29	1	801	1804	-	
TP304/304L X 4" X SCH10S PRODUCT CODE: I5764	30	-	1547	4140-0606	322	681	54	88	5.5	PASSED	PASSED	1.4	46	133	38	5	800	1823	-	
TP304/304L X 6" X SCH10S PRODUCT CODE: I5796	10	-	852	4160-0607	359	651	53	87	4.5	PASSED	PASSED	2.1	47	132	25	2	803	1815	-	
TP304/304L X 3/8" X SCH40S PRODUCT CODE: I5106	15	-	78	4402-0506	284	604	57	80	17.2	PASSED	PASSED	3.0	49	176	29	1	810	1820	-	
TP304/304L X 1/2" X SCH40S PRODUCT CODE: I5108	50	-	390	4405-0607	347	652	52	86	17.2	PASSED	PASSED	1.5	45	137	35	2	802	1805	-	
TP304/304L X 1" X SCH40S PRODUCT CODE: I5116	75	-	1156	4410-0607	339	651	53	87	17.2	PASSED	PASSED	2.1	47	132	25	2	803	1815	-	
TP304/304L X 1-1/4" X SCH40S PRODUCT CODE: I5120	15	-	313	4412-0607	277	617	53	81	17.2	PASSED	PASSED	2.1	50	136	31	4	810	1811	-	
TP304/304L X 1-1/2" X SCH40S PRODUCT CODE: I5126	74	-	1845	4415-0511	359	678	52	87	15.9	PASSED	PASSED	1.8	51	126	27	4	804	1823	-	

HEAT TREATMENT : 1050 DEGREE CELSIUS QUENCHED IN WATER

NOTE : Y.S. = YIELD STRENGTH
T.S = TENSILE STRENGTH
E.L. = ELONGATION IN 50mm for 401, min. %

QA DEPARTMENT

KT/DOC/QA-22-R4

AUG-14-2006 MON 08:07 AM
08/14/2006 MON 07:55 [TX/RX NO 6225] 005
V3.10.15 147/424

WANT DNV

MILL TEST CERTIFICATE

Shanghai Want Industry Co., Ltd.(EN10204 3.1)

ROBERT-JAMES SALES, INC
THESE TEST REPORTS APPLY TO
Eden Cryo.
P.O. BC-2972
标识/Marking: ROBERT-JAMES NO. CH4647
Manufacture's mark: WANT FOOTAGE DATE 8/28
Standard: ASTM A312/ASME SA312
Specifications ITEM NO. Dimension Size
Grade Material: MATERIAL NO. 304/304L
Heat Number: 8A1219
L/C NO: SNI 850197

检验证书：EN10204:2004	证书号：MTC-WANT-WG828-28-2-06
Certificate: EN10204:2004	CertificateNo.: MTC-WANT- WG828-28-2-06

客户/Customer: SILBO INDUSTRIES, INC.
订单号/Order No.: 98004
品名/Article: 无缝钢管/ Seamless stainless pipe SA312
技术条件/Specification: ASTM A376-02A/SA376
材料/Material: ASTM A312/ASME SA312-304/304L
加工工艺/Workmanship 冷拔/Cold drawing
交货状态/Delivery Conditions: Annealed , pickled
产品交货范围/Extent of material delivery

钢级 Grade	规格 Dimension	炉批号 Lot NO.	炉号 Heat No.	数量 Pcs	英尺（ft） Quantity(ft)	重量(kg) Weight(kg)
304/304L	4"×SCH40S	HD081001-03	8A1219	18	355.28	1743

试验结果/Test Results: 标准要求已符合，见如下表格/The requirements are fulfilled as listed in Annex.

A 化学分析/Chemical analysis:

炉号/Heat No.	C%	Mn%	Si%	S%	P%	Cr%	Ni%	Mo%
ASTM A312/ASME SA312-304/304L	≤ 0.035	≤ 2.00	≤ 1.00	≤ 0.030	≤ 0.045	18.0-20.0	8.0-11.0	/
8A1219	0.029	1.28	0.37	0.004	0.041	18.20	8.05	/

B 机械性能/Mechanical Properties/tensile test:

试样号 Specimen Nr./No.	试验温度 Test Temp	屈服强度 Yield Strength	拉伸强度 Tensile Strength	延伸% Elongation	硬度 Hardness	冲击试验 Charpy Impact
		Mpa	Mpa	%	HRB	
ASTM A312/ASME SA312-304/304L	25℃	≥205	≥515	≥35	≤90	--
19	8A1219	260	565	58	78	--

C 无损探伤，尺寸检查及水压试验/Hydrostatic Test, NDT and Dimension check:

试验/Testing	结果/Result	试验/Testing	结果/Results
尺寸公差/ Tolerance check	OK	水压试验/Hydrostatic pressure test	N/A
外观检查/Visual check	OK	PMI 测验/PMI Test	PASSED
ET Test	PASSED	晶间腐蚀/IGC to ASTM A262 "E"	PASSED
扩口测试/Flaring Test	PASSED	压扁测试/Flattening Test	PASSED

D 备注/Remarks:

MATERIAL IS CERTIFIED ISO 9001:2000
MATERIAL IS EN10204-3.1 COMPLIANT
MATERIAL IS NACE MR0175 COMPLIANT
MATERIAL IS NACE MR0103-2003 COMPLIANT
MATERIAL IS FREE OF MERCURY CONTAMINATION
MATERIAL IS PED 97/23/EC CERTIFIED

1.热处理 / annealing (at 1050℃, not less than 15.min) and quenched
NO WELD REPAIR

2.We hereby certify that the product described herein has been manufactured in accordance with the specifications concerned and also with the purchaser's requirements and that the test results shown herein are correct

2

CERTIFIED MATERIAL REPORT

FELKER BROTHERS CORPORATION
22 NORTH CHESTNUT AVE
MARSHFIELD, WI USA 54449
(800) 828-2304

Heat# 391025

CERTIFIED DATE: 10/14/2009

PRODUCT

Part Description	PIPE A312-304L 4 SCH10S		
Primary Specification	ASTM A312 08		
Grade	TP304/TP304L		
Other Specifications	ASME SA312 01 NACE MRO 175	MIL-P-24691 / 3	NACE MRO 103

CHEMICAL COMPOSITION

Carbon	.023
Chromium	18.030
Copper	.390
Manganese	1.350
Molybdenum	.240
Nickel	8.110
Nitrogen	.040
Phosphorus	.026
Silicon	.450
Sulfer	.013

MECHANICAL PROPERTIES

Elongation	2IN	63.0
Hardness	RB	79
Tensile	PSI	91100
Yield	PSI	35000

MANUFACTURER STEPS

Anneal Temperature	F	1900
Bend / Reverse Bend Test		Pass
Corrosion Test A262 Practice E		Pass
Dimensional / Visual		Pass
Eddy Current - Weld - E426		Pass
Eddy Current - Full Body - E426		Pass
Etching Test - Weld		Pass
Pickling / Passivation ASTM A380		Yes

COMMENTS

Country of melt is UNITED STATES OF AMERICA
Manufactured in USA
TP304/TP304L Dual Cert, Welded
Felker Brothers does not use mercury in the production nor the testing of its products

CERTIFICATION

It is certified that all figures are correct as contained in the records of the company.
We certify that these products conform to specifications listed above.
ISO 9001 Certified
DIN 50049 3.1/EN 10204 3.1
FAR BAA Complies
DFARS BAA Complies
FAR TAA Complies

Scott Martinek

Quality Manager

3

S E N D I R I A N B E R H A D

Kanzen Tetsu Sdn Bhd
Company No. 190887-W
P.O. Box 7272, Lot 4 Persiaran Perusahaan
Seksyen 23, 40708 Shah Alam, Selangor Darul Ehsan, Malaysia.
Tel: (603) 5542 1400 Fax: (603) 5541 9777
http://www.kanzen-tetsu.com e-mail: info@kanzen-tetsu.com

MILL TEST REPORT

EN 10204 3.1

CERTIFICATE NO : 9132379 (1) DATE : 14/11/2008

CONTRACT NO : 9107154
SHIPPER : KANZEN TETSU SDN BHD

ORDER NO. : 0603KAN
CUSTOMER : MERIT BRASS

PRODUCT SPECIFICATION : WELDED AUSTENITIC STAINLESS STEEL PIPES ASTM A312/ASME SA312M-08

SIZE	QTY PCS	TOTAL LENGTH	WEIGHT KGS	HEAT NO	TENSILE TEST Y.S. N/mm²	TENSILE TEST T.S. N/mm²	TENSILE TEST EL %	HARDNESS TEST (HRB)	HYDROSTATIC TEST MPa	FLATTENING TEST	CORROSION TEST ASTM A262 PRACTICE E	CHEMICAL COMPOSITION (%) C	Si	Mn	P	S	Ni	Cr	Mo	
												X 100			X 1000		X 100			
					205	515	35					-	-	-	-	-	800	1800	-	MIN
												3.5	100	200	45	30	1300	2000	-	MAX
TP304/304L X 1" X SCH40S PRODUCT NO. P5016	641	-	9883	4410-0811	337	640	48	89	17.2	PASSED	PASSED	2.6	46	146	36	4	802	1822	-	
TP304/304L X 1" X SCH40S PRODUCT NO. P5016	259	-	3993	4410-0810	268	607	53	82	17.2	PASSED	PASSED	1.9	40	139	28	4	800	1808	-	
TP304/304L X 1-1/4" X SCH40S PRODUCT NO. P5020	34	-	710	4412-0810	278	627	55	82	17.2	PASSED	PASSED	2.1	42	133	28	3	803	1817	-	
TP304/304L X 1-1/4" X SCH40S PRODUCT NO. P5020	86	-	1796	4412-0808	275	613	55	82	17.2	PASSED	PASSED	2.3	36	141	27	10	801	1826	-	
TP304/304L X 1-1/2" X SCH40S PRODUCT NO. P5024	222	-	5534	4415-0810	284	622	52	82	15.9	PASSED	PASSED	2.2	37	150	24	2	812	1823	-	
TP304/304L X 1-1/2" X SCH40S PRODUCT NO. P5024	178	-	4437	4415-0811	278	627	50	79	15.9	PASSED	PASSED	2.4	49	136	37	9	806	1816	-	
TP304/304L X 3" X SCH40S PRODUCT NO. P5048	100	-	6958	4430-0810	314	607	52	83	13.1	PASSED	PASSED	2.0	45	143	42	8	806	1827	-	
TP304/304L X 4" X SCH40S PRODUCT NO. P5064	25	-	2476	4440-0811	288	602	54	83	11.0	PASSED	PASSED	1.5	49	143	34	3	808	1818	-	
TP304/304L X 1" X SCH10S PRODUCT NO. I5716	156	-	2011	4110-0807	327	662	51	84	17.2	PASSED	PASSED	2.1	45	134	30	1	801	1808	-	
TP304/304L X 1" X SCH10S PRODUCT NO. I5716	94	-	1213	4110-0810	327	662	51	84	17.2	PASSED	PASSED	2.1	45	134	30	1	801	1808	-	
TP304/304L X 2" X SCH10S PRODUCT NO. I5732	97	-	2350	4120-0807	304	646	51	85	9.7	PASSED	PASSED	2.8	34	150	32	6	821	1843	-	

HEAT TREATMENT : 1050 DEGREE CELSIUS QUENCHED IN WATER

NOTE : Y.S. = YIELD STRENGTH
T.S. = TENSILE STRENGTH
E.L. = ELONGATION IN 50mm (or 4D), min, %

QA DEPARTMENT
KEE SUE CHING
QA EXECUTIVE

KT/DOC/QA-22 R4

4
V3.10.15 150 / 424

S E N D I R I A N B E R H A D

Kanzen Tetsu Sdn Bhd
Company No. 190887-W
P.O. Box 7272, Lot 4 Persiaran Perusahaan
Seksyen 23, 40708 Shah Alam, Selangor Darul Ehsan, Malaysia.
Tel: (603) 5542 1400 Fax: (603) 5541 9777
http://www.kanzen-tetsu.com e-mail: info@kanzen-tetsu.com

MILL TEST REPORT

EN 10204 3.1

CERTIFICATE NO : 9132379 (1) DATE : 14/11/2008

CONTRACT NO : 9107154
SHIPPER : KANZEN TETSU SDN BHD

ORDER NO. : 0603KAN
CUSTOMER : MERIT BRASS

PRODUCT : WELDED AUSTENITIC STAINLESS STEEL
SPECIFICATION : PIPES ASTM A312/ASME SA312M-08

SIZE	QTY PCS	TOTAL LENGTH	WEIGHT KGS	HEAT NO	TENSILE TEST Y.S. N/mm²	TENSILE TEST T.S. N/mm²	TENSILE TEST EL %	HARDNESS TEST (HRB)	HYDROSTATIC TEST MPa	FLATTENING TEST	CORROSION TEST ASTM A262 PRACTICE E	CHEMICAL COMPOSITION (%) C	Si	Mn	P	S	Ni	Cr	Mo	
												X 100			X 1000		X 100			
					205	515	35					-	-	-	-	-	800	1800	-	MIN
												3.5	100	200	45	30	1300	2000	-	MAX
TP304/304L X 1" X SCH40S PRODUCT NO. P5016	641	-	9883	4410-0811	337	640	48	89	17.2	PASSED	PASSED	2.6	46	146	36	4	802	1822	-	
TP304/304L X 1" X SCH40S PRODUCT NO. P5016	259	-	3993	4410-0810	268	607	53	82	17.2	PASSED	PASSED	1.9	40	139	28	4	800	1808	-	
TP304/304L X 1-1/4" X SCH40S PRODUCT NO. P5020	34	-	710	4412-0810	278	627	53	82	17.2	PASSED	PASSED	2.1	42	133	28	3	803	1817	-	
TP304/304L X 1-1/4" X SCH40S PRODUCT NO. P5020	86	-	1796	4412-0808	275	613	55	82	17.2	PASSED	PASSED	2.3	36	141	27	10	801	1826	-	
TP304/304L X 1-1/2" X SCH40S PRODUCT NO. P5024	222	-	5534	4415-0810	284	622	52	82	15.9	PASSED	PASSED	2.2	37	150	24	2	812	1823	-	
TP304/304L X 1-1/2" X SCH40S PRODUCT NO. P5024	178	-	4437	4415-0811	278	627	50	79	15.9	PASSED	PASSED	2.4	49	136	37	9	806	1816	-	
TP304/304L X 3" X SCH40S PRODUCT NO. P5048	100	-	6958	4430-0810	314	607	52	83	13.1	PASSED	PASSED	2.0	45	143	42	8	806	1827	-	
TP304/304L X 4" X SCH40S PRODUCT NO. P5064	25	-	2476	4440-0811	288	602	54	83	11.0	PASSED	PASSED	1.5	49	143	34	3	808	1818	-	
TP304/304L X 1" X SCH10S PRODUCT NO. I5716	156	-	2011	4110-0807	327	662	51	84	17.2	PASSED	PASSED	2.1	45	134	30	1	801	1808	-	
TP304/304L X 1" X SCH10S PRODUCT NO. I5716	94	-	1213	4110-0810	327	662	51	84	17.2	PASSED	PASSED	2.1	45	134	30	1	801	1808	-	
TP304/304L X 2" X SCH10S PRODUCT NO. I5732	97	-	2350	4120-0807	304	646	51	85	9.7	PASSED	PASSED	2.8	34	150	32	6	821	1863	-	

HEAT TREATMENT : 1050 DEGREE CELSIUS QUENCHED IN WATER

NOTE: Y.S. = YIELD STRENGTH
T.S. = TENSILE STRENGTH
E.L. = ELONGATION IN 50mm (or 4D), min, %

QA DEPARTMENT
YEE SUE CHING
QA EXECUTIVE

KT/DOC/QA-22 R4

V3.10.15 151 / 424

CERTIFIED TEST REPORT EDEN 764 PAGE 1 Page 1

MANUFACTURER
Schoeller-Bleckmann Pipe & Tube Inc
5430 Brystone Drive
Houston TX77041

SHIP TO
HOUSTON TX
4732 DARIEN
HOUSTON TX77028

SHIP FROM
Schoeller-Bleckmann
Edelstahlrohr GmbH
Rohrstrasse 1
Ternitz FF2630

MANUFACTURING PLANT
Schoeller-Bleckmann
Edelstahlrohr GmbH
Rohrstrasse 1
Ternitz FF2630

HEAT # 041126
MCJUNKIN PO NUMBER S012102450 PART # 6661-0535 LINE # 000001
SHIPPED 09/10/28
VENDOR ORDER NUMBER 8502820

- SPECIFICATIONS *-*

SEE BELOW

--*-* NOTES *-*-*-*

The material had been furnished in accordance
to the requirements.
WE CERTIFY THAT THIS MATERIAL HAS BEEN MANUFACTURED
AND EXAMINED IN ACCORDANCE WITH ALL REQUIREMENTS OF
THE SPECIFICATION AND ORDER CONFIRMATION AND THAT THE
RESULTS OF ALL EXAMINATIONS ARE ACCEPTABLE.

--* DESCRIPTION *-*-*

TP304/L 2" NBXSCH 10S
SEAML. STAINL. STEEL TUBES/PIPES
,
S GRADE A600, TP304/TP304L,
FINISH CFD = COLD FINISHED, HEAT-TREATED, PICKLED,
TECHN. COND. ACC.
ASTM A312/A312M-06, ASTM A376/A376M-06,
ASME SECT.II PART.A SA312/SA312M-2007 ED.,
ASME SECT.II PART.A SA376/SA376M-2007 ED.,
NACE MR0175/ISO 15156-3:2003, NACE MR0103-2005
CORR. TEST TO MIL-P-24691/3(ASTM A262 PCT.E)
, &SPACE&
TOLERANCES ACC.
ASTM A999/A999M-04A,
ASME SECT.II PART.A SA530/SA530M-2007 ED.
,
RANDOM LENGTH
6.100 MM - 7.300 MM,
PLAIN ENDS
,
&SPACE&
INTERGR. CORR. TEST ACC. TO ASTM A262 PRACT.E: SATISFACTORY
POSITIVE MATERIAL IDENTIFICATION TEST ON EACH TUBE/PIPE
BY "X-RAY-FLUORESCENCE-ANALYZER": SATISFACTORY
FLATTENING TEST: SATISFACTORY
SOLUTION ANNEALED AT 1070 C , 10 min ,
AIR
HYDROSTATIC TEST 96 BAR ,1400 PSI

- CONTINUED *-*

6a

ON EACH TUBE: SATISFACTORY
,,
MATERIAL IDENTIFICATION ON EACH PIPE: SATISFACTORY,,
,,
MATERIAL IS FREE OF MERCURY CONTAMINATION.,,
,,
NO WELD REPAIR HAS BEEN PERFORMED ON MATERIAL.,,
,,
INTERGRANULAR CORROSION TEST ACC.TO ASTM A262 PRAC.E: O.K.,,
INTERGRANULAR CORROSION TEST ACCORDING TO MIL-P-24691/3,,
(SENSITIZED 675 C (1250 F) / 1 HOUR / AIRCOOLED):O.K.,,
THE TUBES CONFORM ALSO TO NACE STANDARD MR0175-2003/MR0103-2005
,,
WE CERTIFY THAT THIS MATERIAL HAS BEEN MANUFACTURED,,
AND EXAMINED IN ACCORDANCE WITH ALL REQUIREMENTS OF,,
THE SPECIFICATION AND ORDER CONFIRMATION AND THAT THE,,
RESULTS OF ALL EXAMINATIONS ARE ACCEPTABLE.,,
MARKING: SBS - ,,
DIMENSION - HEAT NO. - LOT NO. - SMLS,,
,,
STEELMAKING PROCESS: EF + AOD,,
,,
ABBREVIATIONS:,,
RP0.2 = YIELD STRENGTH
RM = TENSILE STRENGTH
A2" = ELONGATION
KG = GRAIN SIZE,,
CONVERSION:,,
1 MPA = 1 N/MM = 145.037 PSI

CHEMISTRY

C	SI	MN	P	S	CR	MO
0.013	0.32	1.59	0.026	0.002	18.15	0.17

NI	C	SI
10.25	0.020	0.35

CHEMISTRY

MN	P	S	CR	MO	NI
1.58	0.025	0.005	18.66	0.18	10.49

MECHANICAL

Hardness Rockwell B	ROCKWELL-B	74	
	ROCKWELL-B	73	
Temperature	TEMPERATURE	20	CC
Yield strength ASTM	YIELD	268	MPa
Tensile strength	TENSILE	589	MPa
Elongation ASTM	ELONGATION	53	%
	ELONGATION	53	%
Tensile strength	TENSILE	574	MPa
Yield strength ASTM	YIELD	258	MPa
Temperature	TEMPERATURE	20	CC

QUALITY ASSURANCE CONTACT Josef OFENBOECK
Schoeller-Bleckmann Pipe & Tube Inc

THIS INFORMATION WAS RECEIVED ELECTRONICALLY FROM THE MANUFACTURER IDENTIFIED ABOVE.

- END OF REPORT *-*

6b

2/2

PO#BL-2387
Item#1

PO: 0280255 Item #: 0010
Heat/C of C: II-306073/II-14
Part: 064-302-SP0400 OMI

OmegaFlex Inc.

Hose Certificate of Conformance

DATE RECEIVED 11/3/2008 OMEGAFLEX PART 302-SP0400

ALLOY 321 GAUGE 0.0160 in. WIDTH 12.8300 in.

HEAT NUMBER II-827468 MASTER/LOT TAG# AL6885 COIL/HOSE TAG# II-306073

WEIGHT 0.00 Lbs. SPECIFICATION# OMS-200 SPECIFICATION REVISION# E

CHEMISTRY (WEIGHT PERCENT)

C	0.0200	Mn	1.7700	P	0.0270	S	0.0001	Si	0.4800	Cr	17.3000	Ni	9.3000
Mo	0.0000	Cu	0.0000	Co	0.0000	Ti	0.2100	N	0.0100	Al	0.0000	Fe	0.0000
Zn	0.0000	Mg	0.0000	Cb	0.0000	Ta	0.0000	Sn	0.0000	V	0.0000	W	0.0000
Pb	0.0000	B	0.0000										

Mechanical and Physical Properties

TENSILE 86500 psi YIELD 34400 psi ELONGATION 66 %

HARDNESS TEST TYPE 15T GRAIN SIZE 9.0

HARDNESS TEST RESULT 80.0 CARBIDE RATING # N/A BEND TEST RESULT N/A

CHEMICAL ANALYSIS AND MECHANICALS ARE TAKEN FROM THE RAW MATERIAL SUPPLIER'S TEST CERTIFICATE

Reviewed by Dean W Rivest P.E.

7

6/7/09

PO#15718 ~~11 GA~~

BC-3350

BC-02128

METALLURGICAL TEST REPORT

NAS

6870 HIGHWAY 42 EAST

NORTH AMERICAN STAINLESS
6870 HIGHWAY 42 EAST
GHENT, KY 41045

(8)

Certificate: 447982 4

Customer: 000570 021

Mail To:
ALRO METALS SERVICE CENTER
CUSTOMER PICKUP
P.O. BOX 764
821 SPRINGFIELD STREET
DAYTON, OH 45401

Ship To:
ALRO METALS SERVICE CENTER
CUSTOMER PICKUP
P.O. BOX 764
821 SPRINGFIELD STREET
DAYTON, OH 45401

6/4/09

25017A

Date: 1/26/2009 Page: 1

Steel: 304

Finish: 2B

Your Order: 6740178

NAS Order: WN 0009540 01

Corrosion: ASTM A262/02aE;180Bend-OK

PRODUCT DESCRIPTION:

STAINLESS STEEL COIL,C.R. ANNEALED & PICKLED; UNS 30400
ASTM A240/08,A480/08a,A666/03; ASME SA240/07,SA480/07,SA666/07
CHEM ONLY ON FOLLOWING ASTM: A276/06a,A479/01,A484/06b,A312/07
CHEM ONLY ON FOLLOWING ASME: SA312/07,SA479/07
AMS 5513H XMRK; MIL-S-5059D AMEND3 (X CROWN MEAS)
NACE MR0175/01, MR0103/07; QQS766D-A X MAG PERM
MIN. SOLUTION ANNEAL TEMP 1900F, WATER QUENCHED

REMARKS:

Mat'l is Free of Mercury Contamination. No weld repairs.
EN 10204:2004 3.1; QQS763F Cond A; RoHS Compliant
Material is Free of Radioactive Contamination
NAS Steel Making Process: EAF, AOD, & Cont. Casting
Product Mfg.by a Quality Mgt.Sys. in Conf. w/ISO 9001:2000
*Melted & Manufactured in the USA; Mat'l is DFARs Compliant
EN10204 3.1b

Product Id	Coil #	Skid #	Thickness	Width	Weight	-------Length------		Mark	Pieces	Commodity Code
044TK4 AB	044TK4 A		.1163	48.0000	4,836	SHEETS	120.00	1	25	14816840

CHEMICAL ANALYSIS

CM(Country of Melt) ES(Spain) US(United States) ZA(South Africa) JP(Japan)

HEAT	CM	C	CR	CU	MN	MO	N	NI	P	S
4TK4	US	.0430	18.1220	.5035	1.5690	.3195	.0588	8.1355	.0315	.0010
		SI								
		.2935								

MECHANICAL PROPERTIES

Product Id#	Coil #	Loc	Dir	UTS KSI	.2% YS KSI	ELONG %-2"	Hard RB	Tail Hard
044TK4 AB	044TK4 A	F	T	93.86	45.58	51.20	85.50	83.00

ALRO STEEL CORP.
INDIANAPOLIS
JAN 26 2009
RECEIVED
SUBJECT TO COUNT INSP.

ALRO STEEL/METAL
RT05549582

'S hereby certifies that the analysis on this certification is correct and the
rial ets the specifications stated.

QC ENGINEER ERIC HESS 1/26/2

v3.10.15 155 / 424

VINOX CORPORATION
Phase II Block 5, Cavite Export Processing Zone Authority, PEZA,
Rosario, Cavite, Philippines 4106
TEL : +63-46-437-2995 ~ 98 FAX : +63-46-437-1027

MILL TEST REPORT

PURCHASER : SILBO INDUSTRIES, INC.

DATE : 2009/04/20
P. O. NO.: 98693
S/C NO. : I452SIL

PRODUCT : STAINLESS STEEL BUTT WELD FITTING

HEAT NO.	Q'TY.	DESIGNATION	SPECIFICATION
8BCC1 ✓	359	304L/304 W 1" 90 ELBOW LR 10S	ANSI B16.9-07

CHEMICAL ANALYSIS OF MATERIAL

HEAT NO.	C	Mn	Si	P	S	Cr	Ni	Mo	N	SPECIFICATION
Maxi	0.030	2.00	1.00	0.045	0.030	18 - 20	8 - 13		0.100	A/SA403/07A
8BCC1	0.025	1.60	0.41	0.029	0.003	18.30	8.10		0.044	ASTM ASME WP-W

MECHANICAL CHARACTERISTICS

HEAT NO.	T.S-PSI	Y.S-PSI	%-E.L.	%-R.A.	HEAT-TREAT.	DIMENSION	P.M.I.
Mini	70,000	25,000	30		1050 - 1150 °C		
8BCC1	91,200	41,400	52		1060 °C	OK	OK

MATERIAL RESISTANT TO INTERCRYSTALLINE CORROSION ICC TEST ACCORDING TO ASTM A262 PRACTICE E. FREE FROM MERCURY CONTAMINATION.MATERIAL IN ACCORDANCE WITH NACE MRO 175-2003, MRO 103-2003 & MRO 103-2007 ISO 9001:2000, PED 97/23/EC CERTIFIED.EN10204 3.1

S3460F

FACTORY INSPECTOR:

EDWIN CAMPOS
QUALITY ASSURANCE DEPARTMENT

SM-005-0

NI/WO

9

ADDRESS: NO.50 Shenshen Road
The Administrative Committee of New&High
Tech Industrial Park,CHDZ,Jiangsu,China

CSYC

Changshu YungChia Hardware Fittings Enterprise Co.,Ltd.

TEL: 86-512-52842266
FAX: 86-512-52842277

PURCHASER: SILBO INDUSTRIES, INC.

COMMODITY: STAINLESS STEEL BUTT WELD PIPE FITTINGS

MATERIALS: ASTM A312 -2008

INSPECTION CERTIFICATE

DATE: 2009.11.04
ORDER NO.: CS090808
MFG. NO.: PO-200908-006
CERTIFI. NO.: PO-200908-005
L/C NO.:

SPEC: ASME/ASTM A/SA403 -07a WP304/304L -W
ASME/ANSI B16.9 -07

S3720C; ISO 9001:2000, NACE MRO-175/ISO 15156, NACE MR0103-2007, EN10204 3.1B, PED97/23/EC

P.O.: 99314

ITEM NO.	DESCRIPTION	Q"TY	HEAT NO.	RAW MATERIAL HEAT NO.	SURFACE & APPEARANCE INSPECTION	DIMENSION INSPECTION
008	90° ELBOW SR SCH 10S 304L 2½"	53	099157200	252300	GOOD	GOOD
009	90° ELBOW SR SCH 10S 304L 2½"	47	097184200	252300	GOOD	GOOD
010	45° ELBOW LR SCH 10S 304L 1¼"	75	093022V12	VLH111712	GOOD	GOOD
011	TEE SCH 10S 304L ½"	40	094069V08	VLH101708	GOOD	GOOD
012	TEE SCH 10S 304L 1"	125	096178V21	VLK040321	GOOD	GOOD
013	RED-TEE SCH 10S 304L 1¼" x 1"	4	07A846V61	VLH101861	GOOD	GOOD
014	RED-TEE SCH 10S 304L 1½" x ½"	3	07A203V23	VLH041023	GOOD	GOOD
015	RED-TEE SCH 10S 304L 1½" x ½"	7	094038V87	VLK020087	GOOD	GOOD
016	RED-TEE SCH 10S 304L 3" x 2½"	8	096186249	250749	GOOD	GOOD
017	RED-TEE SCH 10S 304L 3" x 2½"	2	098029200	252300	GOOD	GOOD

STANDARD / ITEM NO.	CHEMICAL COMPOSITION (%)								PHYSICAL TENSILE PROPERTY (%)			
	C MAX.	Si MAX.	Mn MAX.	P MAX.	S MAX.	Ni	Cr	Mo	YIELD STRENGTH N/mm²	TENSILE STRENGTH N/mm²	ELONGATION %	HARDNESS TEST HRB
304/304L	0.035	1.00	2.00	0.045	0.030	8-11	18-20	------	170	485		
008	0.021	0.390	1.44	0.030	0.005	8.10	18.17		272	607	49.00	74
009	0.021	0.390	1.44	0.030	0.005	8.10	18.17		272	607	49.00	76
010	0.018	0.440	1.39	0.036	0.007	8.08	18.21		283	622	50.00	73
011	0.025	0.390	1.44	0.033	0.005	8.08	18.18		274	610	51.00	78
012	0.017	0.360	1.45	0.031	0.010	8.02	18.12		284	628	49.00	74
013	0.019	0.400	1.46	0.029	0.011	8.15	18.38		278	605	52.00	78
014	0.020	0.400	1.47	0.037	0.005	8.01	18.22		281	642	50.00	71
015	0.024	0.400	1.48	0.039	0.002	8.09	18.06		292	643	50.00	77
016	0.025	0.440	1.35	0.040	0.004	8.04	18.32		288	627	[illegible]	75
017	0.021	0.390	1.44	0.030	0.005	8.10	18.17		272	607	49.00	78

REMARKS: HEAT TREATMENT AT 1060℃(1940℉)±20℃.
FOR 8 MINUTES MINIMUM TIME AND WATER QUENCHED.
Material is manufactured Mercury Free and free from Mercury contamination.

WE HEREBY CERTIFY THAT THE MATERIAL DESCRIBED HEREIN HAS BEEN MADE IN ACCORDANCE WITH THE ABOVE SPECIFICATION AND ALSO WITH THE REQUIREMENTS CALLED FOR BY THE ABOVE ORDER AND IS THAT WHICH HAS BEEN TESTED TO THE SATISFACTION OF THE INSPECTOR.

CHIEF OF INSPECTION DEPARTMENT

QUALITY INSPECTION

10

3/4" + 1" + 1 1/2" S40 304 CAP

T74877

Customer SOUTHWEST STAINLESS ATLANTA

MATERIAL TEST & INSPECTION CERTIFICATE

According to
DIN 50049 3. 1. B / EN 10204 3. 1. B / ISO 10474 3. 1. B

SUNGKWANG BEND CO., LTD.
#1720, SONGJEONG-DONG, GANGSEO-KU, BUSAN, KOREA
http://www.skbend.com
TEL:82-051-3300-450
FAX:82-051-3300-335

Date of issue: 2003/11/25

Job No.	Spec. for Material	Spec. for Inspection	Visual & Dimension	P.O. No.	Certificate No.
	A/SA403WP304/304L-S 00a/98ED	ASME B16.9	SATISFACTORY	418761	QCL-200311Y1819

Manufacture No.	Description	Size	Quantity	Heat Treatment
9-22-20	MADE FROM STEEL PLATE CAP B.W	3/4" . 1" . 11/2"	225EA	SOLUTION TREATED.

Raw Material Maker	Raw Material Heat No.	Mfg. Heat ID No.	Test Piece size	N.D.E.	Heat.
POSCO	T74877	T74877	ASTM A370 TEST PIECE	N/A	1060 C Hold 20MIN. "WATER"

STD		Chemical Composition(%)												Tensile Test				Bending Test	Flattening Test	Hardness (HB)	Impact Test	Hydrostatic Test
		C	Si	Mn	P	S	Ni	Cr	Mo	Cu	V	Cb	C.E	Y.S N/mm² ksi	T.S N/mm² ksi	EL. %	R.A. %	( )				
SIZE	Min						8.00	18.00														
	Max	0.035	1.00	2.00	0.045	0.030	11.00	20.00						30.0	75.0	28.0						
		0.021	0.57	1.17	0.024	0.004	9.57	18.50						41.4	85.7	55.0						
										— B L A N K —												

WE CERTIFY THIS MATERIAL HAS BEEN MANUFACTURED AND EXAMINED IN ACCORDANCE WITH ALL REQUIREMENTS OF THE SPECIFICATION AND THE RESULTS OF ALL EXAMINATION ARE ACCEPTABLE

S/10S : 3/4" . 5EA
1" . 60EA
11/2" . 60EA
S/40S : 3/4" . 25EA
1" . 25EA
11/2" . 50EA

[ ] Reviewed By
[ ] Witnessed By

QUALITY MANAGEMENT DIVISION
KH SUH / CHIEF

MANAGING DIRECTOR

SKE-8903

SUNGKWANG BEND CO., LTD.

/2009 07:06 FAX 6142946681 003
v3.10.15 158 / 424

DC 3171
W.O. BC-02128

(12)

MATERIAL TEST & INSPECTION CERTIFICATE

SUNGKWANG BEND CO., LTD.(SKB)
1720, Songjisong-Dong, Gangseo-Ku,Busan,Korea
TEL : 82-051-3300-450
FAX : 82-051-3300-335
http://www.skbend.com

CUSTOMER: MULTALLOY (P.O. NO.: 706424)
PROJECT NAME: N/A

According to
DIN 50049 3.1 / EN 10204 3.1 / ISO 10474 3.1

PURCHASE ORDER NO.	–	SPEC. FOR MATERIAL	ASTM/ASME A/SA403WP304/304L, S 04/04ED	CERTIFICATE NO.	QCLJ2007123618
PJT JOB NO.	N/A	SPEC. FOR INSPECTION	ASME B16.9	DATE OF ISSUE	2007.12.20
STARTING MATERIAL	FORGED MAT'L	SKB JOB NO.	2007051120	VISUAL & DIMENSION	SATISFACTORY

NO.	SEQ/LINE/ITEM NO	DESCRIPTION	QTY	HEAT NO.	MFG ID NO.	MILL MAKER	POR/CODE/TAG NO
201		CAP S10S 1" B.W SML'S SUS	10	S22320	S22320	CHANGWON STEEL	

CHEMICAL COMPOSITION(%) (L : LADLE, P : PRODUCT)

STD. / HEAT NO.	SPEC.	C	Si	Mn	P	S	Ni	Cr	Mo	Cu	V	Nb	N	Al	B	W	Sn	Ti	CE
	MIN						8.00	18.00											
	MAX	0.030	1.00	2.00	0.045	0.030	11.00	20.00											
S22320	L	0.015	0.39	1.38	0.030	0.028	9.06	18.14											
	P																		
S22320	L																		
	P																		

TENSILE TEST

SPEC.	Y.S KSI	T.S KSI	EL. %	R.A %
MIN	30.0	75.0	28.0	
MAX				
L	43.6	80.4	41.0	
P				
L				
P				

IMPACT TEST / HEAT NO.	TEST TEMP.	SIZE OF SPECIMEN(mm)		ABSORBED ENERGY STD./ VALUE			AVE.	LATERAL EXPANSION STD./ VALUE			AVE.	PERCENT SHEAR STD./ VALUE			AVE.
S22320			B/M												
			H.A.Z												
			W/M												
			B/M												
			H.A.Z												
			W/M												

HARDNESS HRC	
MIN	
MAX	22.0
HB	155

HEAT TREATMENT	SOLUTION TREATED 1060℃, 1Hr., "Water"		
N.D.E	P.T:GOOD	PMI	N/A
FLATTENING TEST	N/A	**MEMO	
BENDING TEST	N/A		
HYDROSTATIC TEST	N/A		
CORROSION TEST	N/A		
GRAIN SIZE TEST	N/A		
HIC TEST	N/A		

· MATERIAL MEETS THE REQUIREMENTS OF NACE MR-01-75.

WE CERTIFY THIS MATERIAL HAS BEEN MANUFACTURED AND EXAMINED IN ACCORDANCE WITH ALL REQUIREMENTS OF THE SPECIFICATION AND THE RESULTS OF ALL EXAMINATION ARE ACCEPTABLE.

□ REVIEWED BY :
□ WITNESSED BY : _____ CA1DS131

QM DIV. SENIOR MANAGING DIRECTOR

SKE-0903

X HEADQUARTERS:
1001 EAST WATERFRONT DR.
MUNHALL, PA 15120
PHONE 412-462-2185
FAX: 412-462-4180

MARCEGAGLIA

CERTIFICATE OF TEST

ROBERT JAMES SALES, INC.
THESE TEST REPORTS APPLY TO
Eden Cryogenics
P.O. BC 3276
ROBERT-JAMES NO. CH6346
FOOTAGE ____ DATE 12-15-09
ITEM NO. ____
MARK NO. ____

MILL ORDER NO.	227897-01
PURCHASE ORDER NO.	AP1278
DATE SHIPPED	11/13/2009

SPECIFICATIONS
ASTM A312-08 AND ASME SA312-08
WELDED
NACE MRO-175 03/NACE MRO-103 03

OTHER SPECIFICATIONS
WE CERTIFY THAT THIS MATERIAL IS FREE FROM MERCURY CONTAMINATION & CONTINUOUS CARBIDE

SOLD TO
ROBERT JAMES
PO BOX 7999
2585 WALDEN AVE
BUFFALO, NY 14225-7999

SHIP TO
ROBERT JAMES
2585 WALDEN AVENUE
BUFFALO, NY 14225

FLAR	HYDRO	FLAT	FLAN	EDDY	RBND	RFLT
OK		OK		OK		

ADDITIONAL INFO.
NETWORK DURING ITS MANUFACTURE AND PROCESSING. BRIGHT ANNEALED
EN 10204 SEC. 3.1.B
COUNTRY OF MELT-USA/COUNTRY OF MFG.-USA

ITEM	TYPE	O.D./I.P.S	SCH	HEAT NO.	CARBON	MANG.	PHOS.	SULPHUR	SILICON	CHROMIUM	NICKEL	MOLY	COPPER	COBALT	TI	N			
03	TP304/TP304L	3-1/2"	5	481313	.026	1.35	.024	.013	.44	18.11	8.10	.23	.35	.13					
05	TP304/TP304L	1"	10	4YK7	.018	1.71	.031	.011	.27	18.18	8.16	.45	.53						
05	TP304/TP304L	1"	10	829979	.019	1.85	.029	.012	.56	18.40	8.16	.33	.48	.39					
09	TP316/TP316L	1"	40	828809	.010	1.59	.032	.011	.43	16.30	10.10	2.07	.44	.53		.040			
09	TP316/TP316L	1"	40	829935	.016	1.58	.031	.011	.44	16.70	10.20	2.09	.37	.32		.045			

ITEM	ROCKWELL HARDNESS	YIELD STRENGTH (PSI)	TENSILE STRENGTH (PSI)	ELONGATION	HYDRO PSI (IF APPLICABLE)	MELT SOURCE (IF APPLICABLE)	PIECES	FOOTAGE
03	B80	49,900	88,500	61%		D	30	600'
05	B86	48,200	88,400	61%		D	48	1020'
05	B84	48,200	88,900	61%		D	96	2040'
09	B83	49,000	90,200	61%		D	24	510'
09	81	46,000	87,000	57%		D	72	1530'

ISO 9001:2008
CERTIFIED

PAR BAA X Complies, _Cannot certify compliance
DFARS BAA X Complies, _Cannot certify compliance
FAR TAA X Complies, _Cannot certify compliance

WE CERTIFY THAT THE CHEMICAL, PHYSICAL OR MECHANICAL TESTS REPORTED HEREIN ARE CORRECT AS SHOWN ON OUR RECORDS.

David Roeser
Q.C. MANAGER

13

v3.10.15 160 / 424

ENLIN STEEL CORPORATION

MILL TEST REPORT

DATE: Jan/16/2001

PURCHASER: H & H MACHINE COMPANY, INC.

PURCHASE ORDER NO.:

ENLIN S/C NO.: A370H&H

PRODUCT : STAINLESS STEEL BUTT WELD FITTING

HEAT NO.	QTY	TYPE	DESIGNATION	SIZE	SPECIFICATION
O181	89	304L/304	S-10 CAP	1"	ANSI B16.9-93

CHEMICAL ANALYSIS OF MATERIAL

HEAT NO.	C	Mn	Si	P	S	Cr	Ni	Mo	N	SPECIFICATION
Maxi	0.035	2.00	1.00	0.040	0.030	18- 20	8- 11	-		A/SA403/97A
O181	0.021	1.37	0.36	0.022	0.012	18.36	10.18			ASTM ASME WP-W

MECHANICAL CHARACTERISTICS

HEAT NO.	T.S.-PSI	Y.S.-PSI	%-E.L.	%-R.A.	HEAT-TREAT.	DIMENSION	P.M.I.
Mini	75,000	30,000	30		1050- 1150 ℃		
O181	87,000	36,000	63		1060 ℃	OK	OK

MATERIAL RESISTANT TO INTERCRYSTALLINE CORROSION ACCORDING TO ASTM A262 PRACTICE E.
FREE FROM MERCURY CONTAMINATION.
MATERIAL IN ACCORDANCE WITH NACE MR0175-94.

FACTORY INSPECTOR :

Yi Tsai Lin

YI TSAI LIN
QUALITY ASSURANCE DEPARTMENT

東豐工業股份有限公司
TUNG FONG INDUSTRIAL CO., INC.

Tel: +63-46-4371036,37
+63-46-9710301
Fax: +63-46-4371038
+63-46-9710302

Phase III, Lot 10 and 12, Block 19,
Philippine Economic Zone Authority,
Rosario, Cavite, Philippines

Order.No. : 98692
Ref.No. : T08-519-PI01
Cert. No. : 101460-F
Date : 2009/05/08

Mill Test Certificate

1. Commodity : STAINLESS STEEL B.W. PIPE FITTINGS
2. Purchaser : SILBO INDUSTRIES, INC.
3. Material : ASTM A240 STAINLESS STEEL PLATES
4. Specification : ASTM/ASME A/SA403WP-2003 ANSI B16.9-2007 ANSI B16.25 WP304/304L-S

Item No.	Order Size					Description of Test			Pcs	Heat No.	Pipe Heat No.
						Surface & Dimension	Hydrostatic	Flattening			
30.	Cap	wp-s	304/304L	sch10s	1"	Good		N/A	30	T36378	T36378
31.	Cap	wp-s	304/304L	sch10s	1-1/2"	Good		N/A	75	T36378	T36378
32.	Cap	wp-s	304/304L	sch10s	2"	Good		N/A	250	T36378	T36378
33.	Cap	wp-s	304/304L	sch10s	2-1/2"	Good		N/A	30	139308	139308
34.	Cap	wp-s	304/304L	sch10s	3"	Good		N/A	200	139308	139308
35.	Cap	wp-s	304/304L	sch10s	5"	Good		N/A	50	YU154719	YU154719
36.	Cap	wp-s	304/304L	sch10s	6"	Good		N/A	100	YU154719	YU154719

Item No.	Mechanical (Physical) Property				Chemical Property							
	Yield Point	Tensile Strength	Hardness	Elongation	C	Mn	P	S	Si	Ni	Cr	Mo
	MPa	MPa	HRB	%	% (x1000)	% (x100)	% (x1000)	% (x1000)	% (x100)	%	%	%
30.	286.0	599.0	67.9	58.5	21	177	30	3	42	8.20	18.30	
31.	286.0	599.0	67.9	58.5	21	177	30	3	42	8.20	18.30	
32.	286.0	599.0	67.9	58.5	21	177	30	3	42	8.20	18.30	
33.	289.0	601.0	65.0	54.0	24	125	29	2	40	8.12	18.60	
34.	289.0	601.0	65.0	54.0	24	125	29	2	40	8.12	18.60	
35.	280.7	601.3	81.0	49.0	17	144	22	5	41	8.25	18.17	
36.	280.7	601.3	81.0	49.0	17	144	22	5	41	8.25	18.17	
	205.0 Min	515.0 Min	90.0 Max	40.0 Min	30 Max	200 Max	45 Max	30 Max	100 Max	8.00 10.00	18.00 20.00	

THIS IS TO CERTIFY THAT ABOVE PRODUCTS ARE IN CONFORMITY WITH
MECHANICAL(PHYSICAL) AND CHEMICAL PROPERTY INDICATED ABOVE.
THE FITTINGS CONFORM IN EVERY WAY TO ASTM/ASME A/SA403 2003 WP304/304L
AND TO ANSI B16.9-2007 ANSI B16.25 SPECIFICATION.
HEAT TREATMENT AT 1050 DEGREE CENTIGRADE AND WATER QUENCHED.
ALL GRADES OF THE MATERIAL HAS BEEN FURTHER VERIFIED TO BE
MERCURY FREE AND NO WELD REPAIRS WERE PERFORMED.
HARDNESS TO NACE MR0175-2003 AND NACE MR0103-2003 INTERCRYSTALLINE
CORROSION ACCORDING TO ASTM/TYPE E.
CERTIFIED ACCORDING TO EN10204/3.1.B.
PMI TESTED.
S3460E
TUNG FONG HAS ESTABLISHED A QMS ACCORDING TO ISO 9001, CERTIFIED BY
TUV CERT.(01-100-089316) WITH PARTICULAR MATERIAL APPRAISAL
PER BVQI CERT. (CE-PED-PMA-TFI001-08-TWN).
COUNTRY OF ORIGIN ON ALL PIPES USED WITH HEAT NUMBERS AS
INDICATED ABOVE IS TAIWAN.

ORIGINAL

NI/WO

TUNG FONG INDUSTRIAL CO., INC.

Chief of Inspection Dept.

15

Page 1

	CERTIFICADO DE TESTE DE MATERIAL Inspection Certificate 3.1 / Certificado de inspeção 3.1 acc. to / nach DIN EN 10 204 / ISO 10474	Schulz America Latina Fábrica Campos Quality Assurance Garantida de Qualidade

Page	Página	1 of 2
Date:	Data:	25.07.2007
Certificate No.	Certificado nº:	100093
Revision:	Revisão:	0

Firma:
SCHULZ USA INC
3700 CLAYMOORE PARK, DR., SUITE 100
HOUSTON, TEXAS
USA

Our Order:	Nossa ordem:	USA000073
Our Item:	Nosso item:	9
Your P.O.	Seu pedido.	
Your Item:	Seu item:	
Our Ref.:	Nossa ref.:	costho

Component / Produto

Description:	Descrição:	Tee equal, Welded
		Te reto, com costura
Material Grade:	Tipo Material:	WP304/304L
Class:	Classe:	W
Quantity:	Quantidade:	425 Pcs / Pç
Dimensions:	Dimensões:	1" SCH 10S

Marking / Marcação

P M I
A 403
WP304/304L - W
364604
1" SCH 10S
Brasil
Manufacturing Date / Data de Fabricação

PT000459

Requirements / Especificações do produto

Base Material:	Material base:	ASTM A 312/SA 312
Product form:	Produto:	ASTM A 403/A 403M - 06, NACE MR0175/ ISO 15156-3:2003(E) ASME B16.9-2003
Welding level	extremidade	ASME B16.25-2003 Fig. 2(a)
Cold formed	Conformado Frit	

Heat Treatment / Tratamento térmico

solution annealed / Tratamento Térmico 1050 °C 1940 °F 15 min resfriado em água / resfriado em água

Chemical Composition / Composição química

Melting Process / Tipo de Fundição:		EIAOD						
Heat Heat	364604	C	Mn	P	S	Si	Cr	Ni
		0,016	1,40	0,026	0,006	0,39	18,1	8,1

364604

Mechanical Properties / Propriedades mecânicas

Tensile Test / Ensaios Mecânicos

Test No.	Charge	specimen / Probe			Test		Yield Strength				Tensile Strength		Elongation	Reduction
		Location	Dir	Size	Temp.		Rp0,2 %		Rp1,0 %		Rm		A50	Z
				mm	°C	°F	(N/mm²)	KSI	(N/mm²)	KSI	(N/mm²)	KSI	%	%
BRJ075079-05	364604	B	T	Std	20	68	296,00	43,22	330,00	47,88	550,00	51,08	51,0	

Teste de dureza

Rockwell C: < 20

16a

Page 2

	CERTIFICADO DE TESTE DE MATERIAL Inspection Certificate 3.1 / Certificado de Inspeção 3.1 acc. to / nach DIN EN 10 204 / ISO 10474	Schutz America Latina Fábrica Campos Quality Assurance Garantida de Qualidade

Page	Página	2 of 2
Date:	Data:	25.07.2007
Certificate No.	Certificado n°:	100053
Revision:	Revisão:	0

Mandatory Tests / Testes padrões

Positive Material Identification / Identificação Positiva do Material (PMI)	Base and filler metal (if applicable): satisfactory Material de base e metal de solda (se aplicável): satisfatório
Visual and Dimensional Control / Controle Visual e Dimensional	without complaints / Satisfatório

Metallurgical Requirements / Requerimentos Metalúrgicos

Corrosion Resistance / Resistência a Corrosão	ASTM A 262 PRACTICE E: Satisfactory / Satisfatório

The material is free from low-melting-point material and radioactive contamination.
Este produto não contém material de ponto de baixo fusão nem de contaminação radioativa.

This testimonial and certification is recorded by computersystem and is valid without signature. Alteration or use for other products are regarded as falsification of documents and will be subject to criminal jurisdiction.
Este certificado/documento foi criado por meio eletrônico e por isso é válido sem assinatura. Modificações e uso para outros produtos é falsificação e fraude e responderá perante a lei

THIS IS TO CERTIFY THAT THE CONTENT OF THE REPORT IS CORRECT AND ACCURATE AND THAT ALL TEST RESULTS AND OPERATIONS PERFORMED BY SCHULZ OR ITS SUBCONTRACTORS ARE IN COMPLIANCE WITH THE MATERIAL SPECIFICATIONS LISTED IF SO STATED ELSEWHERE IN THIS CMTR AND WAS FOUND TO MEET THE REQUIREMENTS. WE HEREBY CERTIFY THAT THE MATERIAL USED FOR PRODUCT FORM CONVERSION CONFORMS TO THE APPLICABLE DIMENSIONAL REQUIREMENTS.
Certificamos que o conteúdo deste relatório está correto e confere com os resultados dos testes e operações feitas pela Schulz ou suas subcontratadas de acordo com as especificações listadas neste certificado. Certificamos que o material atende os requisitos das normas e está apto e íntegro para uso dentro das condições e especificações da norma.

25.07.2007 Décio Antonelli
Date — Authorized Inspection Representative
Data — Representante de Inspeção autorizado

16b

MILL'S CERTIFICATE

WUXI HUAAN FLANGES CO., LTD.

HUAXI VILLAGE,WUXI JIANGYIN CITY JIANGSU,P.R. CHINA 214421

ACCORDING TO EN10204 3.1 PED 97/23/EC

52280B

DATE:MAY 18 2007

Page:1 OF 1

Certificate No.:070518

Purchaser: SILBO INDUSTRIES,INC.

Order No: 95628/S2280A

Invoice No: ERH-067-2

B/L No: SHUSA518202

FLANGE FACES TO BE 125-250RMS

Specification

For Material: STAINLESS STEEL ASTM A/SA182 F304/ 304/L.

MANUFACTURE IS CERTIFIED ISO 9001:2000

Specifications

For Inspection: ANSI B16.5

SEC. II PART .A (1989) ISO9002 NACE MR0175-

MATERIAL IN NACE MRO 103-2004 COMPLIANT

No.	Mfg No.	Description			Quantity	Visual Dimensional Inspection	Bend Test Former (1.5) result 180o	Hardness MAX 217	Magentic Particle Examinat
1		FLANGE SORF 304/L	20"	150LBS	10 PCS	GOOD	GOOD	150	GOOD
2		FLANGE SORF 304/L	24"	150LBS	175 PCS	GOOD	GOOD	147	GOOD

SPECIFICATIONS

CHEMICAL COMPOSITION (%)

No.	Heat No.		C x 1000	Si x 100	Mn x 100	P x 1000	S x 1000	Ni	Cr	N x 100
		Min						8	18	
		Max	30	75	200	45	30	12	20	10
1	ZT0092		20	39	164	40	9	8.09	18.15	9
2	ZT0081		18	37	182	40	12	8.06	18.25	9

Tension Test

Y. S MPa	T. S MPa	RA %	EL %	Material Manufactor
170	485	50	40	
270	585	72	58	
270	585	70	56	

HEAT TREATMENT

C H NORMALING C H

C H SOLUTIONING 1040 °C H

WE HERE BY CERTIFY THAT THE FITTINGS LISTED ABOVE WERE MANUFACTURED INSTRICT CONFORMITY WITH AS SPECIFCATIONS. THE ABOVE RESULTS OF TENSILE STRENGTH TESTS AND CHEMICAL ANALYSIS ARE TRUE AND CORRECT CORP OF THE TEST CERTIFICATE ISSUED BY THE MANUFACTURER OF THE MATERIAL. MERCURY FREE AND FREE FROM CONTAMINATION.

MANAGER OF QUALITY

v3.10.15 165 / 424

SHUANG LI GROUP CO.,LTD.
MILL TEST CERTIFICATE
(ACCORDING TO EN 10204 3.1B)

Industrie Service Management Service

ORDER NUMBER: 98690
S3460C
Date: 2009/06/18

CBPVI REGISTRATION NUMBER: TS2710778-2010

STAINLESS STEEL BUTT WELD FITTINGS CONFORMING WITH SA 403 WP-W/ASTM A 403-00B T304/304L OR T316/316L DIMENSIONAL TOLERANCES

Order No.	Item No.	Material	Description	Size	Qty	Heat No	CHEMICAL COMPOSITION(%)									Mechanical Properties			Visual Inspection		Heat Treatment	Hardness HB	Intergranular Corrosion
							C	Si	Mn	P	S	Ni	Cr	Mo	Ti	Tensile Strength Mpa	Yield Point Mpa	Elongation %					
	1	304/L-S	SCH10S WT=0.250" CAP	24"	24	BB070051	0.016	0.37	1.28	0.022	0.002	8.13	18.17			720	375	60	GOOD	GOOD	GOOD	GOOD	GOOD
	2	304/L-WX	SCH10S CON RED	30"X20"	10	BB070127	0.023	0.51	1.82	0.026	0.002	8.01	18.05			615	315	56	GOOD	GOOD	GOOD	GOOD	GOOD
	3	304/L-WX	SCH10S CON RED	30"X24"	6	BB070127	0.023	0.51	1.82	0.026	0.002	8.01	18.05			615	315	56	GOOD	GOOD	GOOD	GOOD	GOOD
	4	304/L-WX	SCH10S CON RED	36"X24"	4	BB070127	0.023	0.51	1.82	0.026	0.002	8.01	18.05			615	315	56	GOOD	GOOD	GOOD	GOOD	GOOD
	5	304/L-WX	SCH10S ECC RED	30"X24"	6	BB070127	0.023	0.51	1.82	0.026	0.002	8.01	18.05			615	315	56	GOOD	GOOD	GOOD	GOOD	GOOD
	6	304/L-WX	SCH10S ECC RED	36"X20"	2	BB070127	0.023	0.51	1.82	0.026	0.002	8.01	18.05			615	315	56	GOOD	GOOD	GOOD	GOOD	GOOD
	7	304/L-WX	SCH10S ECC RED	36"X24"	2	BB070127	0.023	0.51	1.82	0.026	0.002	8.01	18.05			615	315	56	GOOD	GOOD	GOOD	GOOD	GOOD
	8	304/L-WX	SCH10S ECC RED	36"X30"	1	BB070127	0.023	0.51	1.82	0.026	0.002	8.01	18.05			615	315	56	GOOD	GOOD	GOOD	GOOD	GOOD
	9	304/L-WX	SCH40S L.R 90 ELBOW	20"	2	BB070090	0.020	0.40	1.31	0.020	0.001	8.18	18.30			660	340	49	GOOD	GOOD	GOOD	GOOD	GOOD
	10	304/L-WX	SCH40S L.R 90 ELBOW	24"	4	BB070090	0.020	0.40	1.31	0.020	0.001	8.18	18.30			660	340	49	GOOD	GOOD	GOOD	GOOD	GOOD
	11	304/L-S	SCH40S CAP	14"	5	BB070090	0.020	0.40	1.31	0.020	0.001	8.18	18.30			660	340	49	GOOD	GOOD	GOOD	GOOD	GOOD
	12	304/L-S	SCH40S CAP	20"	10	BB070090	0.020	0.40	1.31	0.020	0.001	8.18	18.30			660	340	49	GOOD	GOOD	GOOD	GOOD	GOOD
	13	304/L-S	SCH40S CAP	24"	4	BB070090	0.020	0.40	1.31	0.020	0.001	8.18	18.30			660	340	49	GOOD	GOOD	GOOD	GOOD	GOOD
	14	304/L-WX	SCH40S CON RED	24"X18"	2	BB070090	0.020	0.40	1.31	0.020	0.001	8.18	18.30			660	340	49	GOOD	GOOD	GOOD	GOOD	GOOD
	15	304/L-WX	SCH40S CON RED	24"X20"	2	BB070090	0.020	0.40	1.31	0.020	0.001	8.18	18.30			660	340	49	GOOD	GOOD	GOOD	GOOD	GOOD
	16	304/L-WX	SCH40S ECC RED	16"X14"	2	BB070090	0.020	0.40	1.31	0.020	0.001	8.18	18.30			660	340	49	GOOD	GOOD	GOOD	GOOD	GOOD
	17	304/L-WX	SCH40S ECC RED	18"X16"	2	BB070090	0.020	0.40	1.31	0.020	0.001	8.18	18.30			660	340	49	GOOD	GOOD	GOOD	GOOD	GOOD
	18	316/L-WX	SCH10S L.R 90 ELBOW	30"	6	BB070104	0.026	0.60	1.42	0.025	0.003	10.19	16.01	2.11		590	240	65	GOOD	GOOD	GOOD	GOOD	GOOD
	19	316/L-WX	SCH10S S/R 90 ELBOW	36"	2	BB070104	0.026	0.60	1.42	0.025	0.003	10.19	16.01	2.11		590	240	65	GOOD	GOOD	GOOD	GOOD	GOOD
	20	316/L-WX	SCH40S CAP	24"	4	BB070102	0.024	0.50	1.34	0.014	0.001	10.12	16.72	2.09		620	385	49	GOOD	GOOD	GOOD	GOOD	GOOD

REMARKS: MATERIAL IS DUAL CERTIFIED. MANUFACTURED TO A/SA 403 WPW/WPS. WPW MATERIAL WAS X-RAYED. MANUFACTURER IS CERTIFIED ISO9001-2000. MATERIAL IS NACE MRO-175 COMPLIANT
MATERIAL IS NACE MRO103-2003 COMPLIANT. MATERIAL IS MANUFACTURED MERCURY FREE. AND FREE FROM MERCURY CONTAMINATION.
MATERIAL IS EN10204-3.1B COMPLIANT. MATERIAL IS PED 97/23/EC CERTIFIED.

SHUANGLI GROUP CO.,LTD.
ADD:NO.3566,TINWEI ROAD,JINSHAN
DISTRICT,SHANGHAI,CHINA
Tel:86-21-67256666-8111 Tel:67256660
Fax:86-21-67256660

Quality Examinator

双力集团有限公司 产品检验专用章

V3.10.15 166 / 424

SHUANG LI (GROUP) CO.,LTD
MILL TEST CERTIFICATE
(ACCORDING TO EN 10204 3.1B)

Industrie Service Management Service

ORIGINAL

Page: 1/1

ORDER NUMBER: 06078
S2560A
Date: 2007/11/07

STAINLESS STEEL BUTT WELD FITTINGS CONFORMING WITH SA 403 WP-W/ASTM A 403-OOB T304/304L OR T316/316L DIMENSIONAL TOLERANCES TO B16.9

Order No.	Item No.	Material	Description	Size	Qty	Heat No	CHEMICAL COMPOSITION(%)									Mechanical Properties			Visual Inspection	Dimension Inspection	Heat Treatment	Hardness HB	Intergranular Corrosion
							C	Si	Mn	P	S	Ni	Cr	Mo	Ti	Tensile Strength Mpa	Yield Point Mpa	Elongation %					
	1	304/L	SCH10S CAP	24"	20	BB070021	0.018	0.44	1.22	0.029	0.007	8.13	18.55			570	280	59	GOOD	GOOD	GOOD	GOOD	GOOD

REMARKS: MATERIAL IS DUAL CERTIFIED. MANUFACTURED TO A/SA 403 WPS. MATERIAL WAS X-RAYED. MANUFACTURER IS CERTIFIED ISO9001-2000. MATERIAL IS NACE MRO-175 COMPLIANT
MATERIAL IS NACE MR0103-2003 COMPLIANT. MATERIAL IS MANUFACTURED MERCURY FREE. AND FREE FROM MERCURY CONTAMINATION.
MATERIAL IS EN10204-3.1B COMPLIANT. MATERIAL IS PED 97/23/EC CERTIFIED.

SHANGHAI SHUANGLI (GROUP) CO.,LTD.
ADD:NO.3566,TINWEI ROAD,JINSHAN
DISTRICT,SHANGHAI,CHINA
Tel:86-21-67256666-8111 Tel:67256660
Fax:86-21-67256660

Quality Examinator: 王 [illegible]

上海双力(集团)有限公司 产品检验专用章

61

v3.10.15 1677424

PUFA™

Premium Stainless Steel Seamless Tubes

Shanghai Pufa Stainless Steel Pipe Factory

MILL TEST REPORT

Purchaser: Robert-James Sales, Inc.	Certificate No.: 08-8-62
Contract No.: R.James P.O. No.: AO1123	Date of Issue: 2008.8.31
Commodity: Stainless Steel Seamless Tubes	Specifications: ASTM A213-07a/ASME SA213-07a/ASTM A269-07a EAW
Process: Cold Drawn	Delivery Condition: OD Polished (240 Grit)

Steel Grade	Heat Number	Lot Number	Dimensions	Quantity	
				Pieces	Quantity (ft)
TP304/TP304L	YX0806-410	8-58	2" x 0.065" x 20'	54	1,080

Chemical Composition by Weight (%)

Element	C	Mn	P	S	Si	Cr	Ni	Mo	Co
Requirements	≤0.035	≤2.00	≤0.045	≤0.030	≤1.00	18.00-20.00	8.00-12.00		
Ladle Analysis	0.022	0.75	0.034	0.001	0.41	18.50	8.16		
Product Analysis	0.027	0.70	0.036	0.001	0.42	18.39	8.32		

Mechanical Properties

Test Item	Elongation (% in 2")	Tensile Strength (MPa) Rm	Yield Strength (MPa) Rp / 0.2%
Requirements	≥35	≥515	≥205
Test Results	63/64	610/620	270/275

Test Item	Reduction of Area Z (%)	Hardness	Cold Bend Test	Flaring Test	Flattening Test	Flange Test	P.M.I. Test
Requirements		HRB≤90		21%	e=0.09		
Test Results		76/78		Passed	Passed	Passed	OK

Test Item	Eddy Current Test	Hydrostatic Test	Ultrasonic Test	Intergranular Corrosion Test	Macroscopic Inspection	
					End Cut	Appearance
Requirements	ASTM E 426				OK	OK
Test Results	Passed					

ISO 9001:2000 Certified by Moody International 118783068

In Compliance with EN 10204-3.1.B

Additional Remarks:

(1) Materials is NACE MRO103-2003 compliant
(2) Materials is NACE MRO175-2003 compliant
(3) Materials is PED 97/23/EC certified
(4) Tubes tested per ASTM A450-04a
(5) All tubes annealed to above 1900 Deg F and water quenched below 800 Deg F in 3 minutes
(6) No weld repair performed
(7) Free from mercury contamination
(8) Billets melt and pipes/tubes manufactured in China

We hereby certify that this report is true and correct.

By: Shanghai Pufa Stainless Steel Pipe Factory

Manager of Quality Control Department

PUFA™ 上海浦发不锈钢管厂
Shanghai Pufa Stainless Steel Pipe Factory
地址 (ADD) 上海市浦东新区王港镇红叶路7号 邮编 (ZIP) 201201
No. 7, Hongye Road, Wanggang Town, New Pudong District, Shanghai, P.R. China

NAS

6870 HIGHWAY 42 EAST

METALLURGICAL TEST REPORT

NORTH AMERICAN STAINLESS
6870 HIGHWAY 42 EAST
GHENT, KY 41045

21

Certificate: 481942 1

Customer: 000570 039

Mail To:
ALRO METALS SERVICE CENTER
ALRO GROUP
P.O. BOX 927
JACKSON, MI 49204-0927

Ship To:
ALRO METALS SERVICE CENTER
CUSTOMER PICKUP
COLUMBUS 555 ROME HILLARD
COLUMBUS, OH 43228

Date: 6/24/2009 Page: 1

Steel: 304L/304

Finish: EQANGHRAP

Corrosion: ASTM A262-02a PRACTICE E-

Your Order: 6913312

NAS Order: IN 0069483 01

PRODUCT DESCRIPTION:

Equal angles,hot rolled,annealed,pickled. ASTM-A-484-06B ANGLE UN S S30400,S30403, ASTM A276/04, ASTM A479/04, QQS-763F; EN 10204 3 .1B, ASME SA479/04

REMARKS:

Melted & Manufactured in the USA. Product complies w/ requir ements of EU directive2002.95.EC.RoHS.Material Free from Mer cury contamination. No weld repair. NAS certifies the analys is on certification is correct & the material meets specs st ated.

Product Id	Skid #	Thickness	Size	Weight	Length	Mark	Pieces	Commodity Code
VA6807 0		.3750	3.0000	1,240	252.00	1	1	18084000

CHEMICAL ANALYSIS

CM(Country of Melt) ES(Spain) US(United States) ZA(South Africa) JP(Japan)

HEAT	CM	AL	C	CO	CR	CU	MN	MO	N	NI
4HKL	US	.0029	.0254	.1833	18.2718	.4593	1.7440	.5249	.0695	8.1673

P	S	SI	TI
.0354	.0134	.3276	.0044

MECHANICAL PROPERTIES

Product Id	Id Loc	Id Dir	HB No.	.2 YS KSI	UTS KSI	RA %	.1 YS KSI	Okalic P/F	Elo-2" %
VA6807 0	C	L	237.00	71.69	106.85	67.56	82.35	1.00	41.22

ALRO STEEL/METAL

RT04809816

NAS hereby certifies that the analysis on this certification is correct and the material meets the specifications stated.

QC ENGINEER

ERIC HESS

6/24/200

v3.10.15 169 / 424

CERTIFICATE OF TEST

Certification Dat
5-NOV-2009

CUSTOMER ORDER NUMBER
BC-3175

CUSTOMER PART NUMBER
522153

EARLE M. JORGENSEN COMPANY
2060 ENTERPRISE PKWY.
P.O. BOX 970
TWINSBURG OH 44087

Invoice Number
T550044

SOLD TO: EDEN CRYOGENICS LLC
8449 RAUSCH DR
PLAIN CITY OH 43064

SHIP TO: EDEN CRYOGENICS LLC
8449 RAUSCH DR
PLAIN CITY OH 43064

Description: 304/304L HR ANN BAR ASTM A479
1/2 X 4 X 12' R/L
HEAT: 231105

ITEM: 522153

Line Total: 95.9646 LB

Specifications:

ASTM A276 08A	ASTM A479 08	ASME SA479 07
QQ S 763 F	AMS 5639 H	AMS 5647 H
ASTM A370 09	ASTM A182 08A	ASME SA182 07
ASTM A320 08	ASME SA320 07	ASTM A193 08B
ASME SA193 07	AMS QQ S 763 B	NACE MR0175 03

CHEMICAL ANALYSIS

C	SI	MN	CR	MO	CU	NI	CO
0.03	0.52	1.45	18.0	0.54	0.68	8.1	0.09

P	S	N
0.029	0.029	0.081

RCPT: R833860
MILL : VALBRUNA STAINLESS (BUYOUT) COUNTRY OF ORIGIN : USA

MECHANICAL PROPERTIES

DESCRIPTION	YLD STR KSI	ULT TEN KSI	%ELONG IN 02 IN	%RED IN AREA	HARDNESS BHN
	45.0	90.0	60.0	68.0	179

GRAIN SIZE :5 -

The above data were transcribed from the manufacturer's Certificate of Test after verification for completeness and specification requirements of the information on the certificate. All test results remain on file subject to examination.

We hereby certify that the material covered by this report will meet the applicable requirements described herein, including any specification forming a part of the description.

The willful recording of false, fictitious, or fraudulent statements in connection with test results may be punishable as a felony under federal statutes.

Material did not come in contact with mercury while in our possession.

JIM ROHN

22

MANAGER, QUALITY ASSURANCE

CORE PIPE

PICOR TUBE LINE TUBE TEC BRITE LINE

CERTIFIED MATERIAL TEST REPORT

TÜV CERT
PED 97/23/EC
AD-W0/TRD100
EN DIN ISO9001:2000

23

v3.10.15 171 / 424

BRITE LINE FLANGE DIVISION
Jiangyin Shengda Brite Line Kasugai Flange Co., Ltd.
Shashan Road, European Industrial Park
Zhouzhuang Town, Jiangyin City
P.R. China

BRITE LINE

DESCRIPTION	GRADE	HEAT CODE	*	C	Si	Mn	P	S	Ni	Cr	Mo	N	YIELD PSI	TENSILE PSI	% ELONG	Ra %	HARDNESS HRC
14" 300 RF SO	F304/304L	YT080122	1	0.026	0.41	1.00	0.038	0.010	8.10	18.10		0.078	40,900	82,600	55	66	14
8" 300 RF WN 40S	F304/304L	YT080122	1	0.026	0.41	1.00	0.038	0.010	8.10	18.10		0.078	40,900	82,600	55	66	14
24" 150 BLD	F304/304L	YTB71241	1	0.016	0.27	1.22	0.040	0.015	8.12	18.16		0.058	42,600	81,400	59	68	15

* STARTING MATERAL: 1. FORGING 2. PIPE WELDED WITHOUT FILLER METAL 3. PLATE 4. BAR 5. SEAMLESS PIPE 6. FILLER METAL

THESE BRITE LINE FLANGES HAVE BEEN PRODUCED IN ACCORDANCE WITH AND MEET THE REQUIREMENTS OF ASTM A182-06, ASME SA182-06 AND ANSI/ASME B16.5-03.

THE MATERIAL WAS SOLUTION ANNEALED AT A MINIMUM OF 1900 DEGREES F AND WATER QUENCHED. MADE IN CHINA. 100% PMI.

THIS MATERIAL IS FREE FROM MERCURY CONTAMINATION. NO WELD REPAIR. MEETS NACE MR0175 / ISO 15156 AND MR0103-2005. REPORT IN ACCORDANCE WITH EN 10204 3.1.

WE CERTIFY THAT THE MATERIAL REPRESENTED BY THIS DOCUMENT HAS BEEN INSPECTED AND TESTED, AND IS IN CONFORMANCE WITH THE REQUIREMENTS OF THE REFERENCED SPECIFICATIONS AND YOUR PURCHASE ORDER.

THIS REPORT IS AUTHORIZED BY TIMOTHY P. WARREN, VICE PRESIDENT OF QUALITY ASSURANCE, CORE PIPE. REGISTERED ISO 9001:2000.

PHOENIX TUBE COMPANY,INC.

Manufacturer of Stainless Ornamental and Structural Tubing

CERTIFICATION OF TEST

Sold To: ALRO GROUP
555 ROME-HILLIARD
.
COLUMBUS, OH 43228
USA

Ship To: ALRO GROUP
555 ROME-HILLIARD
.
COLUMBUS, OH 43228
USA

Phone# 8787271 Ext:

CUSTOMER ORDER#: 7032589
DATE SHIPPED: 10/05/09
SIZE: 6" X 1/2" HRAP
SOURCE: USA D
VENDOR: NAS

ORDER#: 201584
QTY SHIPPED: 627.0
GRADE: 304 NO WELD: BAR
HEAT#: 5EX7
TEST REPORT#: TR008408
Report Date: 06/09/09

Specification:

CHEMISTRY THIS COLUMN:

ASTM A276-08 COND. A	ASTM A262, PRACTICE E	ASTM A240-09	TYPE 304
ASME SA276-08 COND. A	CORROSION OK, HRAP	ASME SA240-09	UNS# 30400
ASTM A479-08, S2.1	ASTM A484-08	MILS 5059D AMEND 3	ASTM A666-03
ASME SA479-08, S2.1	ASME SA484-08		
QQ-S-763F, COND. A	NO WELD REPAIR	ASTM A480-09	
QQ-S-766D, COND. A	EN 10204 3.1.B	ASME SA480-09	

MERCURY IS NOT USED BY US AS AN ALLOYING MATERIAL NOR IS METALLIC MERCURY HANDLED IN THE VICNITY OF OUR PROCESSING LINES. WE ARE NOT PRESENTLY AWARE OF ANY MERCURY CONTAMINATION.

MATERIAL HAS BEEN HEATED TO A MINIMUM OF 1900 DEG. F AND IS SUBSEQUENTLY COOLED RAPIDLY TO PREVENT CARBIDE PRECIPITATION.

Chemical Analysis

C	MN	P	S	SI	CR	NI	MO	CU	CO	N2
.045	1.59	.02	.0010	.30	18.05	8.14	.05	.14	0	.05

Physical Analysis

	YIELD		TENSILE		OTHER	
Hardness	PSI	MPA	PSI	MPA	Percent EL	Percent RA
RB 81.	42770	0	95870	0	62.	68.

THE CHEMICAL ANALYSES ARE CORRECT AS CONTAINED IN OUR CORPORATE RECORDS.
PHYSICAL PROPERTIES ARE DETERMINED WHILE MATERIAL IS IN STRIP FORM.

Melted & Manufactured in the USA FAR BAA complies, DFARS BAA complies, FAR TAA complies

CERTIFIED BY: Jerry Cirafo

1185 WIN DR ,BETHLEHEM, PA., 18017 - (610) 865-5337
FAX NUMBER: 610-865-4073

ALRO STEEL/METAL
RT05782362

ALRO STEEL CORP
INDIANAPOLIS
NOV 03 2009
RECEIVED
SUBJECT TO COUNT INSP

24

CMTR SEARCH RESULTS - ICMTR.COM
Heat# 482863

REPORT DATE: 4/29/2009

FELKER BROS. CORP.

FELKER BROTHERS CORPORATION
22 NORTH CHESTNUT AVE
MARSHFIELD, WI. USA
54449
(800) 826-2304

NI/WO

CUSTOMER NAME: FELKER BROTHERS CORPORATION, MARSHFIELD, WI

CERTIFIED DATE: 1/14/2009

PO LINE NUMBER: AP1157

PRODUCT

PART DESCRIPTION	PIPE A312-304L 24 SCH10S
PRIMARY SPECIFICATION	ASTM A312 08
GRADE	TP304/TP304L
OTHER SPECIFICATIONS	ASME SA312 01 NACE MRO175

CHEMICAL COMPOSITION

	Test A
CARBON	0.018
CHROMIUM	18.200
COPPER	0.260
MANGANESE	1.610
MOLYBDENUM	0.420
NICKEL	8.120
NITROGEN	0.070
PHOSPHORUS	0.027
SILCON	0.330
SULFUR	0.001

MECHANICAL PROPERTIES

ELONGATION-TRANS	2 IN	52
HARDNESS TEST	RB	86
TENSILE STRENGTH	PSI	91000
YIELD STRENGTH	PSI	53000

MANUFACTURER STEPS

* COUNTRY OF MELT IS	SWEDEN	
* MANUFACTURED IN USA		
* PED 97/23/EC ANNEX1, PARA 4.3		
* EN764-5		
BEND/REVERSE BEND TEST		PASS
CORROSION TEST		PASS
DIMENSIONAL/VISUAL		PASS
EDDY CURRENT - WELD - E426		PASS
ETCHING TEST		PASS
HYDROSTATIC PRESSURE TEST	PSI	00300
PICKLING/PASSIVATION		YES

COMMENTS

TP304/TP304L DUAL CERT, WELDED
DIN 50049 3.1 / EN 10204 3.1
FELKER BROTHERS CORP DOES NOT USE MERCURY IN THE PRODUCTION NOR THE TESTING OF ITS PRODUCTS.
SOLUTION ANNEALED AT 1900 F

CERTIFICATION

IT IS CERTIFIED THAT ALL FIGURES ARE CORRECT AS CONTAINED IN THE RECORDS OF THE COMPANY.
WE CERTIFY THAT THESE PRODUCTS CONFORM TO SPECIFICATIONS LISTED ABOVE.
ISO 9001 CERTIFIED.

SCOTT MARTINEK
QUALITY MANAGER

Bc-3276

東豐工業股份有限公司
TUNG FONG INDUSTRIAL CO., INC.

Tel: +63-46-4371036,37
+63-46-9710301
Fax: +63-46-4371038
+63-46-9710302

Phase III, Lot 10 and 12, Block 19,
Philippine Economic Zone Authority,
Rosario, Cavite, Philippines

Order.No. : 98692
Ref.No. : T08-S19-PI01
Cert. No. : 101460-F
Date : 2009/05/08

Mill Test Certificate

1. Commodity : STAINLESS STEEL B.W. PIPE FITTINGS
2. Purchaser : SILBO INDUSTRIES, INC.
3. Material : ASTM A240 STAINLESS STEEL PLATES
4. Specification : ASTM/ASME A/SA403WP-2003 ANSI B16.9-2007 ANSI B16.25 WP304/304L-S

Item No.	Order Size					Description of Test			Pcs	Heat No.	Pipe Heat No.
						Surface & Dimension	Hydrostatic	Flattening			
30.	Cap	wp-s	304/304L	sch10s	1"	Good		N/A	30	T36378	T36378
31.	Cap	wp-s	304/304L	sch10s	1-1/2"	Good		N/A	75	T36378	T36378
32.	Cap	wp-s	304/304L	sch10s	2"	Good		N/A	250	T36378	T36378
33.	Cap	wp-s	304/304L	sch10s	2-1/2"	Good		N/A	30	139308	139308
34.	Cap	wp-s	304/304L	sch10s	3"	Good		N/A	200	139308	139308
35.	Cap	wp-s	304/304L	sch10s	5"	Good		N/A	50	YU154719	YU154719
36.	Cap	wp-s	304/304L	sch10s	6"	Good		N/A	100	YU154719	YU154719

Item No.	Mechanical (Physical) Property				Chemical Property							
	Yield Point	Tensile Strength	Hardness	Elongation	C	Mn	P	S	Si	Ni	Cr	Mo
	MPa	MPa	HRB	%	% (x1000)	% (x100)	% (x1000)	% (x1000)	% (x100)	%	%	%
30.	286.0	599.0	67.9	58.5	21	177	30	3	42	8.20	18.30	
31.	286.0	599.0	67.9	58.5	21	177	30	3	42	8.20	18.30	
32.	286.0	599.0	67.9	58.5	21	177	30	3	42	8.20	18.30	
33.	289.0	601.0	65.0	54.0	24	125	29	2	40	8.12	18.60	
34.	289.0	601.0	65.0	54.0	24	125	29	2	40	8.12	18.60	
35.	280.7	601.3	81.0	49.0	17	144	22	5	41	8.25	18.17	
36.	280.7	601.3	81.0	49.0	17	144	22	5	41	8.25	18.17	
	205.0 Min	515.0 Min	90.0 Max	40.0 Min	30 Max	200 Max	45 Max	30 Max	100 Max	8.00 10.00	18.00 20.00	

THIS IS TO CERTIFY THAT ABOVE PRODUCTS ARE IN CONFORMITY WITH
MECHANICAL(PHYSICAL) AND CHEMICAL PROPERTY INDICATED ABOVE.
THE FITTINGS CONFORM IN EVERY WAY TO ASTM/ASME A/SA403 2003 WP304/304L
AND TO ANSI B16.9-2007 ANSI B16.25 SPECIFICATION.
HEAT TREATMENT AT 1050 DEGREE CENTIGRADE AND WATER QUENCHED.
ALL GRADES OF THE MATERIAL HAS BEEN FURTHER VERIFIED TO BE
MERCURY FREE AND NO WELD REPAIRS WERE PERFORMED.
HARDNESS TO NACE MR0175-2003 AND NACE MR0103-2003 INTERCRYSTALLINE
CORROSION ACCORDING TO ASTM/TYPE E.
CERTIFIED ACCORDING TO EN10204/3.1.B.
PMI TESTED.
S3460E
TUNG FONG HAS ESTABLISHED A QMS ACCORDING TO ISO 9001, CERTIFIED BY
TUV CERT.(01-100-089316) WITH PARTICULAR MATERIAL APPRAISAL
PER BVQI CERT. (CE-PED-PMA-TFI001-08-TWN).
COUNTRY OF ORIGIN ON ALL PIPES USED WITH HEAT NUMBERS AS
INDICATED ABOVE IS TAIWAN.

TUNG FONG INDUSTRIAL CO., INC.

NI/WO

Chief of Inspection Dept.

ORIGINAL

26

SHUANG LI (GROUP) CO.,LTD
MILL TEST CERTIFICATE
(ACCORDING TO EN 10204 3.1B)

Industrie Service Management Service

ORDER NUMBER: 96577A
S2690E
Date: 2008/03/12

STAINLESS STEEL BUTT WELD FITTINGS CONFORMING WITH SA 403 WP-W/ASTM A403-00B T304/304L OR T316/316L DIMENSIONAL TOLERANCES TO B16.9

Order No.	Item No.	Material	Description	Size	Qty	Heat No	CHEMICAL COMPOSITION(%)									Mechanical Properties			Visual Inspection	Dimension Inspection	Heat Treatment	Hardness HB	Intergranular Corrosion
							C	Si	Mn	P	S	Ni	Cr	Mo	Ti	Tensile Strength Mpa	Yield Point Mpa	Elongation %					
	1	316/L-W	SCH10S CON RED	2-1/2"X2"	20	BG06396	0.023	0.47	1.06	0.021	0.008	10.16	16.24	2.08		565	265	54	GOOD	GOOD	GOOD	GOOD	GOOD
	2	304/L-WX	SCH10S RED TEE	10"X3"	6	BG07406	0.023	0.47	1.25	0.023	0.007	8.23	18.18			555	270	43	GOOD	GOOD	GOOD	GOOD	GOOD
	3	304/L-WX	SCH10S RED TEE	10"X4"	10	BG07406	0.023	0.47	1.25	0.023	0.007	8.23	18.18			555	270	43	GOOD	GOOD	GOOD	GOOD	GOOD
	4	304/L-WX	SCH10S CAP	10"	75	BB070055	0.022	0.46	1.21	0.020	0.007	8.21	18.08			560	255	51	GOOD	GOOD	GOOD	GOOD	GOOD
	5	304/L-WX	SCH10S CAP	12"	75	BB070055	0.022	0.46	1.21	0.020	0.007	8.21	18.08			560	255	51	GOOD	GOOD	GOOD	GOOD	GOOD
	6	316/L-WX	SCH10S RED TEE	12"X6"	10	BG07493	0.022	0.45	1.08	0.025	0.008	10.15	16.24	2.07		560	285	48	GOOD	GOOD	GOOD	GOOD	GOOD
	7	316/L	SCH10S CAP	10"	100	BB070038	0.021	0.45	1.08	0.021	0.008	10.15	16.21	2.06		575	260	54	GOOD	GOOD	GOOD	GOOD	GOOD
	8	316/L	SCH10S CAP	12"	50	BB070038	0.021	0.45	1.08	0.021	0.008	10.15	16.21	2.06		575	260	54	GOOD	GOOD	GOOD	GOOD	GOOD
	9	304/L-W	SCH40S L.R 90 ELBOW	8"	50	BG07161	0.021	0.45	1.22	0.023	0.009	8.16	18.17			560	255	61	GOOD	GOOD	GOOD	GOOD	GOOD
	10	304/L-WX	SCH40S L.R 90 ELBOW	10"	30	BG07527	0.023	0.46	1.07	0.022	0.007	8.16	18.24			575	260	51	GOOD	GOOD	GOOD	GOOD	GOOD
	11	304/L-WX	SCH40S L.R 90 ELBOW	12"	20	BG07528	0.022	0.48	1.21	0.023	0.008	8.16	18.21			565	270	48	GOOD	GOOD	GOOD	GOOD	GOOD
	12	304/L-W	SCH40S L.R 45 ELBOW	8"	10	BG07161	0.021	0.45	1.22	0.023	0.009	8.16	18.17			560	255	61	GOOD	GOOD	GOOD	GOOD	GOOD
	13	304/L-WX	SCH40S L.R 45 ELBOW	10"	15	BG07527	0.023	0.46	1.07	0.022	0.007	8.16	18.24			575	260	51	GOOD	GOOD	GOOD	GOOD	GOOD
	14	304/L-W	SCH40S TEE	8"	10	BG07161	0.021	0.45	1.22	0.023	0.009	8.16	18.17			560	255	61	GOOD	GOOD	GOOD	GOOD	GOOD
	15	304/L	SCH40S CAP	8"	50	BB070052	0.019	0.56	1.28	0.021	0.009	8.17	18.93			575	260	59	GOOD	GOOD	GOOD	GOOD	GOOD
	16	304/L	SCH40S CAP	10"	20	BB070031	0.018	0.46	1.47	0.021	0.009	8.26	18.36			580	270	49	GOOD	GOOD	GOOD	GOOD	GOOD
	17	316/L-WX	SCH40S L.R 90 ELBOW	10"	6	BG06835	0.022	0.45	1.08	0.022	0.008	10.21	16.24	2.07		585	265	48	GOOD	GOOD	GOOD	GOOD	GOOD
	18	316/L-WX	SCH40S L.R 90 ELBOW	12"	6	BG07529	0.021	0.47	1.24	0.021	0.007	10.24	16.18	2.06		575	255	47	GOOD	GOOD	GOOD	GOOD	GOOD
	19	316/L	SCH40S CAP	8"	20	BB070056	0.022	0.42	1.08	0.022	0.008	10.17	16.24	2.08		565	260	51	GOOD	GOOD	GOOD	GOOD	GOOD
	20	316/L	SCH40S CAP	10"	15	BB070042	0.019	0.49	1.38	0.024	0.009	10.56	16.35	2.15		575	290	55	GOOD	GOOD	GOOD	GOOD	GOOD

REMARKS: MATERIAL IS DUAL CERTIFIED. MANUFACTURED TO A/SA 403 WPS/WPWX. WPWX MATERIAL WAS X-RAYED. MANUFACTURER IS CERTIFIED ISO9001-2000. MATERIAL IS NACE MRO-175 COMPLIANT
MATERIAL IS NACE MRO103-2003 COMPLIANT. MATERIAL IS MANUFACTURED MERCURY FREE AND FREE FROM MERCURY CONTAMINATION.
MATERIAL IS EN10204-3.1B COMPLIANT. MATERIAL IS PED 97/23/EC CERTIFIED.

SHANGHAI SHUANGLI (GROUP) CO.,LTD.
ADD:NO.3566,TINWEI ROAD,JINSHAN
DISTRICT,SHANGHAI,CHINA
Tel:86-21-67256666-8111 Tel:67256660
Fax:86-21-67256660

Quality Examinator:

FELKER BROS. CORP.

FELKER BROTHERS CORPORATION
22 NORTH CHESTNUT AVE
MARSHFIELD, WI USA 54449
(800) 826-2304

CERTIFIED MATERIAL REPORT

Heat# 391025

CERTIFIED DATE: 10/13/2009

PRODUCT

Part Description	PIPE A312-304L 3 SCH10S		
Primary Specification	ASTM A312 08		
Grade	TP304/TP304L		
Other Specifications	ASME SA312 01 NACE MRO 175	MIL-P-24691 / 3	NACE MRO 103

CHEMICAL COMPOSITION

Carbon	.023
Chromium	18.030
Copper	.390
Manganese	1.350
Molybdenum	.240
Nickel	8.110
Nitrogen	.040
Phosphorus	.026
Silicon	.450
Sulfer	.013

MECHANICAL PROPERTIES

Elongation	2IN	63.0
Hardness	RB	79
Tensile	PSI	91100
Yield	PSI	35000

MANUFACTURER STEPS

Anneal Temperature	F	1900
Bend / Reverse Bend Test		Pass
Corrosion Test A262 Practice E		Pass
Dimensional / Visual		Pass
Eddy Current - Weld - E426		Pass
Eddy Current - Full Body - E426		Pass
Etching Test - Weld		Pass
Pickling / Passivation ASTM A380		Yes

COMMENTS

Country of melt is UNITED STATES OF AMERICA
Manufactured in USA
TP304/TP304L Dual Cert, Welded
Felker Brothers does not use mercury in the production nor the testing of its products

CERTIFICATION

It is certified that all figures are correct as contained in the records of the company.
We certify that these products conform to specifications listed above.
ISO 9001 Certified
DIN 50049 3.1/EN 10204 3.1
FAR BAA Complies
DFARS BAA Complies
FAR TAA Complies

Scott Martinek

Quality Manager

28 AV

FELKER BROTHERS CORPORATION

ISO 9001 CERTIFIED

22 North Chestnut Avenue · Marshfield, Wisconsin 54449
Telephone (715) 384-3121 · Fax (715) 387-6837

MATERIAL TEST REPORT
Inspection Certificate

See Additional Tests for Dual Certification

(29)

v3.10.15 177/424

SOLD TO
ROBERT-JAMES SALES, INC.
PO BOX 7999
BUFFALO
NY 142257999

SHIP TO
ROBERT-JAMES SALES, INC.
2585 WALDEN AVE
BUFFALO
NY 14225

PAGE NO.	1
ORDER NO.	244833
CUST. P.O. NO.	A01162
DATE SHIPPED	7/09/08

LINE #	DESCRIPTION	HEAT NUMBER	CARBON	MANG.	PHOS.	SULFUR	SILICON	CHROMIUM	NICKEL	NITROGEN	MOLY	COPPER
5	PIPE A312-304L 10 SCH5S	371714	.023	1.36	.029	.013	.54	18.13	8.17	.04	.25	.27
5	PIPE A312-304L 10 SCH5S	471243	.022	1.40	.026	.010	.45	18.13	8.12	.04	.22	.21
7	PIPE A312-304L 12 SCH10S	280267	.023	1.40	.028	.013	.45	18.15	8.11	.04	.36	.36
7	PIPE A312-304L 12 SCH10S	280463	.022	1.36	.025	.011	.46	18.16	8.16	.04	.29	.46
11	PIPE A312-304L 20 SCH10S	712061	.020	1.48	.028	.003	.44	18.11	8.04	.07		
11	PIPE A312-304L 20 SCH10S	717062	.026	1.46	.029	.007	.43	18.38	8.28	.05		
14	PIPE A312-316L 18 SCH10S	3JH4	.023	1.62	.031	.001	.38	16.69	10.30	.04	2.11	.47
15	PIPE A312-316L 20 SCH10S	715133	.024	1.37	.032	.007	.36	16.93	10.05	.03	2.06	

LINE #	HARDNESS	YIELD STRENGTH P.S.I.	TENSILE STRENGTH P.S.I.	ELONGATION TEST	ELONGATION %	ADDITIONAL TESTS
5	85 RB	45100	99400	2	55.0	ABCDEFGHIJLQRUV
5	85 RB	45000	95000	2	56.0	ABCDEFGHIJLQRUV
7	85 RB	48900	95000	2	55.0	ABCDEFGHIJLQRUV
7	79 RB	35800	85700	2	63.0	ABCDEFGHIJLQRUV
11	82 RB	45000	88000	2	56.0	ABCDEFGHIJLQRUV
11	87 RB	44000	91000	2	52.0	ABCDEFGHIJLQRUV
14	86 RB	46840	91430	2	46.0	ABCDEFGHIKLQRUV
15	83 RB	48000	88000	2	53.0	ABCDEFGHIKLQRUV

ASTM Specification Revision Levels

A778 = 01	A774 = 06
A312 = 07	A403 = 07
A269 = 07	A249 = 07

Felker Brothers Corp. does not use mercury in the production nor in the testing of its products.

It is certified that all figures are correct as contained in the records of the company.

Additional Tests:

- A. Solution Annealed 1900°F
- B. Tension Test
- C. Bend Test/Rev. Bend Test
- D. Hydrostatic Test
- E. Pickle/Passivated A380
- F. Eddy Current - (Weld) E426
- G. Etching (Weld)
- H. Dimensional
- I. Visual
- J. 304/304L Dual Certification
- K. 316/316L Dual Certification
- L. ASTM A 312/ASME SA 312
- M. Eddy Current - (Full Body) E426
- N. Flange Test
- O. Flattening/Rev. Flattening Test
- P. SA403
- Q. Corrosion - ASTM - A262 - Pass
- R. DIN 50049 3.1\EN 10204 3.1
- S. 100% Radiographic Exam SA/A312 S5
- T. 100% Radiographic Exam
- U. NACE MRO175
- V. PED 97/23/EC Annex1, Para 4.3

Scott Martinek-Quality Manager

GKN Sinter Metals Filters GmbH, Radevormwald
Dahlienstraße 43
42477 Radevormwald
Germany
Tel.: +49(0)2195 609 0
Fax: +49(0)2195 609 48

GKN SINTER METALS

(2) Eingangs- und Bearbeitungsvermerke/Custumer remarks

Lieferschein
Advice Note

(3) Nr./No. 113190

(4) Versanddatum/Shipping date 25.01.2010

(5) Lieferanten-Nr./Supplier's Code

(8) Rechnung/Invoice-No. 0

(9) Datum/Date 25.01.2010

Kunden-Nr./Customer's No. 147008

Bereich 130 90 99

EDEN CRYOGENICS
8445 RAUSCH DRIVE
PLAIN CITY,OH 43064
USA
U S A

Ship to:
EDEN CRYOGENICS
8445 RAUSCH DRIVE
PLAIN CITY,OH 43064
USA (614-873-3949)
U S A

(10) Ihre Zeichen/Your ref.	(11) Bestellung Nr., Datum/Your Order-No., Date	(12) Unsere Abt./Our dept.	(13) Hausruf	(14) Unsere Auftrags-Nr./Our Ref-No.
	BC-3279 dated 10-Dec-2009	Katrin Vaupel	609-61	317725

(15) Zusatzdat. des Bestellers/Add.data

(16) Lieferwerk/Supplier

(17) Versandort/-bahnhof/Place of Shipment: 42477 Radevormwald

(19) Versandart/Type of delivery

(20) frei/paid unfrei/unpaid

(21) Verpackungsart/Packing *

(22) Versandzeichen/Marks and Nos

Frachtbasis/Terms of delivery: DDP

(23) brutto/gross - Gesamtgewicht/Weight - (24) netto/net (in kg)

(25) Versandanschrift (Warenempfänger)/Ship to address

(26) Abladestelle Unloading location

(27) Pos.	(28) Sachnummer Customer Part-No.	(29) Bezeichnung der Lieferung (Leistung)/Delivery description (21) Verpackungsart (Einzelheiten)/Packing details and Tag-No. *	(30) Menge Quantity	(31) Einheit Unit	Nachlieferung/ Back Order Menge Quantity
10	BC-02128-0057 3398050551503000	Ø 314.7/89x10mm SIKA-R 30 Sintered metal filters made of stainless steel AISI 316 L Diameter machined to size,with Hole acc. to GKN-Dwg,dated on 04.11.09 + Certificate 2.1	3,00	st	0
20	BC-02128-0058 3398050551503001	Ø 314.7x10mm SIKA-R 30 Sintered metal filters made of stainless steel AISI 316 L Diameter machined to size + Certificate 2.1	3,00	st	0
30 500		Transport charges in USA	1,00	st	0

1/27/10

County of Origin: Fed.Rep.of Germany
Weights: net 9.723+10.620=20.343 kg / gross 26 kg
Customs Tariff No.: 8421.99.00.40 (US-Tariff-No.)
Packing: 1 plywood-case, 52x36x22 cm
Delivery: Federal Express, 25-Jan-10
Marks: FedEx Tracking No. 6210 9358 4899

30

EXPECT MORE

(42) Eingangsvermerke Receiver's remarks	(43) Mengenprüfung Quantity check	(44) Güteprüfung/Prüfbericht Quantity check	(45) Empfänger Receiver	(46) Rechnungsprüfung Invoice check

GKN Sinter Metals Filters GmbH
Dahlienstr. 43

42477 Radevormwald

Datum / Date : 22.01.10

WERKSBESCHEINIGUNG EN 10204-2.1
CERTIFICATE OF COMPLIANCE WITH THE ORDER EN 10204-2.1
Serial No.: 317725_10

zu Lieferanzeige Nr. / to Delivery Note No. :

Besteller / Purchaser	: Eden Cryogenics
Bestell-Nr. / Purchaser no.	: BC-3279
Artikel-Nr. / Part no.	: 3398050551503000-Z
Abmessung / Dimension	: ø314,4/89x10mm
Werkstoff-Bezeichnung / Compound no.	: 1.4404
Norm / Spezification	:
Herstellerbezeichnung des WS / Supplier's compound	: Filters of sintered metal
Liefermenge / Quantity	: 3 pcs.
Auftrags-Nr. / Order no.	: 317725-10
Lieferdatum / Delivery date	: 22.01.10
Batch-Nr. / Batch no.	:
Herstellerzeitraum / Prod. date	:
Prüfberichts-Nr. / Inspection-Report-no.	: A317725_10
Kundenidentifikationsnummer / Customer identnr.	: BC-02128-0057

Eigenschaft characteristic	Einheit unit	Prüfverf. inspect.	M.Typ dtype	Nennm./STP nom/s.size	OT ut	UT lt	Min./n.i.O min./n.con	Max./i.O max./con.	M.Wert/Erg. mean/result
Material No.: 1.4404		F1	A	1			0	1	i.O
Material: X2CrNiMo17-12-2		F1	A	1			0	1	i.O
GKN-Quality: SIKA-R 30		F1	A	1			0	1	i.O

Wir bestätigen mit den oben aufgeführten Prüfergebnissen aus der laufenden betrieblichen Prüfung von Erzeugnissen aus dem gleichen Werkstoff und der gleichen Herstellart wie die Lieferung selbst, daß die Lieferung den Vereinbarungen bei der Bestellannahme entspricht.

We confirm with above mentioned inspection results on the regular internal inspections of products made of the same compound and production method as the delivery, that the delivery is in accordance with the agreements at the order acceptance.

42477 Radevormwald, 22.01.10

(Ort und Datum)

GKN Sinter Metals Filters GmbH
Radevormwald
i.A. Rainer Prescha

(Quality assurance)

30

GKN Sinter Metals Filters GmbH
Dahlienstr. 43

42477 Radevormwald

Datum / Date : 22.01.10

WERKSBESCHEINIGUNG EN 10204-2.1
CERTIFICATE OF COMPLIANCE WITH THE ORDER EN 10204-2.1
Serial No.: 317725_20

zu Lieferanzeige Nr. / to Delivery Note No. :

Besteller / Purchaser	: Eden Cryogenics
Bestell-Nr. / Purchaser no.	: BC-3279
Artikel-Nr. / Part no.	: 3398050551503001-Z
Abmessung / Dimension	: ø314,4x10mm
Werkstoff-Bezeichnung / Compound no.	: 1.4404
Norm / Spezification	:
Herstellerbezeichnung des WS / Supplier's compound	: Filters of sintered metal
Liefermenge / Quantity	: 3 pcs.
Auftrags-Nr. / Order no.	: 317725-20
Lieferdatum / Delivery date	: 22.01.10
Batch-Nr. / Batch no.	:
Herstellerzeitraum / Prod. date	:
Prüfberichts-Nr. / Inspection-Report-no.	: A317725_20
Kundenidentifikationsnummer / Customer identnr.	: BC-02128-0058

Eigenschaft characteristic	Einheit unit	Prüfverf. inspect.	M.Typ dtype	Nennm./STP nom/s.size	OT ut	UT lt	Min./n.i.O min./n.con	Max./i.O max./con.	M.Wert/Erg. mean/result
Material No.: 1.4404		F1	A	1			0	1	i.O
Material: X2CrNiMo17-12-2		F1	A	1			0	1	i.O
GKN-Quality: SIKA-R 30		F1	A	1			0	1	i.O

Wir bestätigen mit den oben aufgeführten Prüfergebnissen aus der laufenden betrieblichen Prüfung von Erzeugnissen aus dem gleichen Werkstoff und der gleichen Herstellart wie die Lieferung selbst, daß die Lieferung den Vereinbarungen bei der Bestellannahme entspricht.

We confirm with above mentioned inspection results on the regular internal inspections of products made of the same compound and production method as the delivery, that the delivery is in accordance with the agreements at the order acceptance.

GKN Sinter Metals Filters GmbH
Radevormwald

42477 Radevormwald, 22.01.10

(Ort und Datum)

i.A. Rainer Prescha

(Quality assurance)

30

WALSIN LIHWA CORPORATION YENSHUI PLANT

3-10, SHI JOU LIAU, CHIN SHUEI LI,
YENSHUI CHEN, TAINAN HSIEN, TAIWAN R.O.C.
Tel : (06)6520911 Fax : (06)6533076

ISO-9001,ISO-14001 CERTIFIED

MILL TEST / INSPECTION CERTIFICATE

Customer								Date	2009/08/28	File	2009090829
Steel Grade		AISI	304/L	Commodity		Stainless Steel Bar		Order No.	323368	P.O.NO.	L26105
Item	Bar No.	Heat No.	Shape	Size	Quantity(Pcs)	Weight (LBS)	Condition	Workmanship			
1	WL9033002	3C730	H	1-1/8"	53	2380	CD	Length:-0/+50mm, Tolerance:A484.			
2	WL9033003	3C730	H	1-3/8"	23	1556	CD	Material is free from mercury contamination			
								No welding repaired			
								Solution treatment at 1040℃ + 1-2 hour + water quenched			
								Grain size test by E112 : fine (5-8)			
								Macro and micro structure : ok			
								Intergranular corrosion test by ASTM A262 Practice E : OK			
								Country of melted & Manufactured: Taiwan			

Heat Code # L6

Chemical Composition (WT%)													Mechanical Properties				
Kind of Test	C	Si	Mn	P	S	Ni	Cr	Mo	Cu	N	Co		Hardness (HB)	Tensile Strength (KSI)	Yield Strength (KSI)	Elongation (%)	Reduction of Area (%)
Spec.	0.03	1.00	2.00	0.045	0.030	8.00	18.00			0.10		MIN					
	MAX	MAX	MAX	MAX	MAX	10.50	20.00			MAX		MAX					
1	0.015	0.345	1.713	0.031	0.027	8.033	18.216	0.202		0.083			183	98.7	69.7	56	77
2	0.015	0.345	1.713	0.031	0.027	8.033	18.216	0.202		0.083			192	94.5	73.4	55	77

Condition:
S-Solution Treated A-Annealed
HR-Hot Rolled P-Polished
CD-Cold Drawn PL-Peeling
ST-Smooth Turned
CG-Centerless Grinding

Invoice No. WL9033 L/C No.
Acc. To ASTM A276-06 cond.A , A479-04 cond.A ,
A 484/A484M,A 182-04a , A193-04b B8 Class1
A320-01 B8 Class1, A262 Practice E, EN 10204 3.1.B
ASME SA479-E01 cond.A , SA182-E01 A03,
SA 193-E01 A02 B8 Class1 , SA320-01a B8 Class1
AMS-QQS-763F,AMS 5639H,5647H,UNS-S30400,S30403

Shape:
R : Round
H : Hexagonal
S : Square
SR : Square-Round
E : Ellipse
FB : Rectangular

Here we certify that the material described herein has been manufactured and tested with satisfactory results in accordance with the requirement of the above material specification.

MANAGER OF QUALITY ASSURANCE DEPARTMENT: M.L.Chiang

Mill Test Report

MILL TEST REPORT **TA CHEN INTERNATIONAL CORPORATION** www.tachen.com This MTR contains 1 page (Page: 1)

MTR#: TCFB05071 Customer#: ALRJAC PO#: 70288883 SO#: CP4414
Item#: G4L00160100 Bundle#: JG0198-034 Heat#: 252208 Item#: G4L00160100 Bundle#: JG0198-035 Heat#: 252208 Item#: G4L00160100
Bundle#: JG0198-041 Heat#: 156654

TCFB05071

Mill Test Report

EN 10204-3.1
TA CHEN STAINLESS PIPE CO., LTD.
NO. 125 HSIN-TIEN 2ND ST.,
JENG-TEH, TAINAN, TAIWAN
TEL:(06)2793254 FAX:(06)2701382
COUNTRY ORIGIN:TAIWAN

Commodity : STAINLESS STEEL PLATE CUT STRIP

Customer : TA CHEN INTERNATIONAL, INC.

Shipper : TA CHEN STAINLESS PIPE CO., LTD.

Specification : ASTM A240-2007/A480-2006b,ASME SA240-2004/SA480-19
ASTM A276-01/ASTM A666-03 Chem/Mech.only
ASTM A479-01/ASME SA479-95 Chem/Mech.only
ASTM A484-01 Chem/Mech.only
QQS-76

Destination : CHICAGO

Customer's PO# : L26557 **Certificate NO** : JG0198001

Factory O/N : QA02J7728 **Date** : 2009/7/31 **INVOICE NO** : QA02J00198

Item No.	Case No. (Crate No.)	Heat No.	Supplier	Size	Quantity Pcs	Weight Kgs	C	Si	Mn	P	S	Ni	Cr	Mo	N
							Chemical Composition in %								
13	087,088,089,100	252303A	YUSCO	.187 X 1.500 X 144 304/304L		956	0.021	0.400	1.390	0.037	0.004	8.080	18.13	-	0.039
14	090,091,092,093,094	252303A	YUSCO	.187 X 2.000 X 144 304/304L		1173	0.021	0.400	1.390	0.037	0.004	8.080	18.13	-	0.039
15	040,041,042,043	156654	YUSCO	.250 X 1.000 X 144 304/304L		924	0.017	0.390	1.580	0.033	0.005	8.110	18.11	-	0.040
16	034,035,036,037,038,039	252208	YUSCO	.250 X 1.000 X 144 304/304L		1481	0.029	0.520	1.400	0.033	0.002	8.150	18.21	-	0.035
17	012,013,014,015,016	252208	YUSCO	.250 X 1.250 X 144 304/304L		1124	0.029	0.520	1.400	0.033	0.002	8.150	18.21	-	0.035
18	111,112,113,114,115,116,117	156277	YUSCO	.250 X 1.500 X 144 304/304L		1690	0.023	0.440	1.460	0.032	0.004	8.090	18.19	-	0.042
				Total	0	7348									

Item No.	Tensile Test 0.2% Yield Strength PSI	Tensile Strength PSI	Elongation %	Reduction of Area %	Hardness Test HRB	Bend Test	Heat Treatment TEMP. o F	Dimension And Surface Condition
13	43500	87400	52.00	62.00	86.00	OK	1960	OK
14	43500	87400	52.00	62.00	86.00	OK	1960	OK
15	39500	89100	54.00	64.00	82.00	OK	1960	OK
16	44600	91200	50.00	60.00	85.00	OK	1960	OK
17	44600	91200	50.00	60.00	85.00	OK	1960	OK
18	43600	89000	53.00	63.00	85.00	OK	1960	OK

Remarks

1. NO WELD REPAIR PERFOMED
2. FREE OF MERCURY CONTAMINATION
3. ASTM A262-01 PRAC. E OK
4. MECHANICAL PROPERTIES ARE MEASURED FROM SHEET COIL BEFORE CUTTING.
5. NACE MR0175-07
6. ALL RAW MATERIALS HAS BEEN ANNEALLED BEFORE CUTTING AND DEBURRED ROLLING

ALRO STEEL/METAL
RT05791712

We hereby certify the above statement to be true and correct every detail
TA CHEN has established a QMS according to ISO 9001, which is certified by LRQA (cert. no.TWN0936925)

George Yang
Manager of Inspection Section/George Yang

ALRO STEEL CORP.
INDIANAPOLIS
SEP 24 2009
RECEIVED
SUBJECT TO COUNT INSP

ALRO STEEL/METAL
-05791713

McMASTER-CARR®

Purchase Order
BC-3344

Pag-

Aurora Industrial Parkway
rora OH 44202
995-5500
ales@mcmaster.com

Eden Cryogenics Llc
8445 Rausch Dr
Plain City OH 43064

McMaster-Carr Number
5596337-01

01/06/2010

A1

Line		Description	Ordered	Shipped			
1	33045T81	Type 304 Stainless Steel Eyebolt for Lifting, with Shoulder, 3/8"-16 Thread, 1300# Work Load Limit, 1-1/4" L Thread	9 Each	9	1 - 319 - 01 06 - 70 T81	9 EA	1
2	90298A597	18-8 Stainless Steel Shoulder Screw, 5/16" Shoulder Diameter, 3-1/2" Shoulder L, 1/4"-20 Thread	12 Each	7	1 - 552		2

Shipped separately from our Cleveland warehouse on 01/06

2	90298A597	18-8 Stainless Steel Shoulder Screw, 5/16" Shoulder Diameter, 3-1/2" Shoulder L, 1/4"-20 Thread	12 Each	5
3	9663K56	Type 302 Stainless Steel Continuous Length Compression Spring, 20" Length, .375" OD, .032" Wire Diameter	4 Packs	4
4	91187A548	ASTM A193 Grade B8 Stainless Steel Fully Threaded, Rod, 1/2"-13 Thread, 3' Length	5 Packs	5

Certificate of compliance

This is to certify that the above items were supplied in accordance with the description and as illustrated in the catalog.

Jason Wolfe
Compliance Manager

Eden Cryogenics Llc

Assembly Area

1

Cycle

45

Shelf

111

2 lb
2 line

EW1BSPA6
01/06/2010
14:03/14:15
277

cuments

2

0100651084636

SS-R-0707

20

McMASTER-CARR®

Purchase Order
BC-3344

McMaster-Carr Number
5596337-02

01/06/2010

ra Industrial Parkway
H 44202
-5500
sales@mcmaster.com

Eden Cryogenics Llc
8445 Rausch Dr
Plain City OH 43064

A86

	Description	Ordered	Shipped			
90298A597	18-8 Stainless Steel Shoulder Screw, 5/16" Shoulder Diameter, 3-1/2" Shoulder L, 1/4"-20 Thread	12 Each	5	2 - 692 - 08	21 - 79 A597	5 EA	2
9663K56	Type 302 Stainless Steel Continuous Length Compression Spring, 20" Length, .375" OD, .032" Wire Diameter, Packs of 1	4 Packs	4	3 - 512			3
91187A548	ASTM A193 Grade B8 Stainless Steel Fully Threaded, Rod, 1/2"-13 Thread, 3' Length, Packs of 1	5 Packs	5	6 - 49			4

ipped separately from our Chicago warehouse on 01/06

33045T81	Type 304 Stainless Steel Eyebolt for Lifting, with Shoulder, 3/8"-16 Thread, 1300# Work Load Limit, 1-1/4" L Thread	9 Each	9
298A597	18-8 Stainless Steel Shoulder Screw, 5/16" Shoulder Diameter, 3-1/2" Shoulder L, 1/4"-20 Thread	12 Each	7

en Cryogenics Llc

ssembly Area

36

Cycle

48

Shelf

603

9 lbs
3 lines

ocuments

3

FW1WBP25
01/06/2010
14:03/14:32
033

010065108464 3

Purchase Order
BC-3344

01/06/2010

McMaster-Carr Number
5596337-02

urora Industrial Parkway
H 44202
-5500
e.sales@mcmaster.com

Eden Cryogenics Llc
8445 Rausch Dr
Plain City OH 43064

ertificate of compliance

his is to certify that the above items were supplied in accordance with the description and as illustrated in the catalog.

Jason Wolfe
Compliance Manager

McMASTER-CARR

Purchase Order
BC-3364

McMaster-Carr Number
5817366-01

01/13/2010

Aurora Industrial Parkway
ora OH 44202
995-5500
s@mcmaster.com

Eden Cryogenics Llc
8445 Rausch Dr
Plain City OH 43064

A84

Line		Description	Ordered	Shipped			
1	4464K221	Type 304 Stainless Steel Thread Pipe Fitting, 1/8" Pipe Size, 5/8" OD, Half Coupling, 1000 PSI, 1/2" L	3 Each	3	2 - 266 - 03	05 - 41 K221	3 EA	1
2	8063K31	Brass Air Tank Valve, 1/8" NPT, 1-5/16" Overall Length	3 Each	3	2 - 314			2
3	5033K32	Extreme-Temperature Tubing Made with Teflon(r) PTFE, 3/16" ID, 5/16" OD, 1/16" Wall, Semi-Clear White	40 Feet	40	2 - 23			3
4	98390A461	Plain Steel Taper Pin, #9 X 6" L, .591" Large End Diameter, .466" Small End Diameter, Packs of 1	4 Packs	4	3 - 326			4

Certificate of compliance

This is to certify that the above items were supplied in accordance with the description and as illustrated in the catalog.

Jason Wolfe
Compliance Manager

Eden Cryogenics Llc

Assembly Area
84

Cycle
22

Shelf
401

Documents
4

4
4 li

FW1BSF
01/13/2
09:34/1
207

4

FARMERS COPPER LTD.
THE METAL SPECIALISTS
202 37th St.
P.O. Box 2649
Galveston, TX 77553

Galveston: 409.765.9003
Houston: 281.480.7764
1-800.231.9450
Fax: 409.765.7115

Delivery Ticket \ Packing

CUSTOMER - COPY

Date Ordered	Customer No	Customer P.O	Customer Contact	Payment Terms
01/07/2010	210428	BC-3347		Net 30
Shipped Date	**Ship VIA**	**FOB**	**Freight Terms**	**Tracking \BOL #**
01/07/2010	UPS GROUND	Warehouse	Prepaid and Add	\216168
Customer Service Rep	**Entered By**	**FCIS Ref**	**Status**	**Sales Order - Shipment**
Jessica Bacon	Jessica Bacon		Complete	813017-1

Ship From
Farmer's Copper Ltd.
1115 Brussels St.
San Antonio, TX 78219 United States

Sold To
EDEN CRYOGENICS, LLC
8445 RAUSCH DRIVE
PLAIN CITY, OH 43064 United States

Interim Destination

Ship To Destination
EDEN CRYOGENICS, LLC
8445 RAUSCH DRIVE
PLAIN CITY, OH 43064 United States

Line / Heat	Containers / Document	Qty UOM	Item Number \ Description \ Specifications	Qty Ord UOM	Qty Shipped	Qty B\O	$Per UOM	Additional Charges	Extended Amount
1	1	2	**R061015000T6----**	1.000	1.000	0.000			
40951-042		PCS	**1-1/2" ROUND 6061-T6 ALUMINUM BAR**	Lot					
			PIECES = 2.0, LENGTH = 72.0, CUTTING-1 = Bar, TOLERANCE = CUT FOR SHIPPING, DOCS = CERT\SHIP, PROTECTION = STD, THICK\DIA = 1.5						
2	1	1	**R061025000T6----**	1.000	1.000	0.000			
40973-028		PCS	**2-1/2" ROUND 6061-T6 ALUMINUM BAR ATTN: JOHN ADAIR**	Each					
			PIECES = 1.0, LENGTH = 84.0, CUTTING-1 = Bar, TOLERANCE = +.125 -.0, DOCS = CERT\SHIP, PROTECTION = STD, THICK\DIA = 2.5						
			Received By : Date:						

McMASTER-CARR®

Purchase Order
BC-3352

.urora Industrial Parkway
ora OH 44202
95-5500
es@mcmaster.com

Eden Cryogenics Llc
8445 Rausch Dr
Plain City OH 43064

McMaster-Carr Number
5618505-01

01/07/2010

A11

Line	Description	Ordered	Shipped		
1	92510A763 Aluminum Unthreaded Round Spacer, 1/2" OD, 5/16" Length, 1/4" Screw Size	360 Each	360	2 - 117 - 02 06 - 50 A763 360 EA	1
[redacted]	[redacted]	[redacted]	[redacted]	1 - 324	2

Certificate of compliance

This is to certify that the above items were supplied in accordance with the description and as illustrated in the catalog.

Jason Wolfe
Compliance Manager

Eden Cryogenics Llc

Assembly Area
11

Cycle
13

Shelf
115

Documents
2

2 lbs
2 lines

FW1BSP19
01/07/2010
07:45/08:12
494

0100720050176

COLUMBUS FASTENERS CORP.

Date: April 26, 2010

Purchaser: Eden Cryogenics, LLC
8445 Rausch Drive
Plain City, Oh 43064

To Whom It May Concern:

It is hereby certified that all the articles in the quantities as called for in the Purchase Order # designated below and issued by you on the date listed below are in conformance with the requirements, specifications and drawings listed on that order.
Additionally, articles called for in this Purchase Order are in conformance with applicable Industrial Fastener Institute specifications.

Purchase Order Numbers: BC-3765

Date of Purchase Order: 04/26/10

Columbus Fasteners Corp.

By: _____
David J. Hill

1150 Chesapeake Ave. Columbus, OH 43212 Phone 614-486-6670 Fax 614-486-2485

ORDER INFORMATION

Delivery Address:
EDEN CRYOGENICS LLC
8445 RAUSCH DRIVE
PLAIN CITY, OH 43064
UNITED STATES

Delivery Site: MDC VACUUM PRODUCTS
Terms of Delivery: COLLECT 28F3A6
Ship Via: UPS COLLECT
PO Number: BC-3348
Route Id:
Forward Agent:
Label Note:
Our Reference: LINDA COOPER

614-873-3949 f 614-873-6925

Certificate of Conformance

This is to certify that the material referenced on the above PO and listed on the attached pick list were manufactured to the customer's requirements or to MDC's internal drawing and specifications.

Materials used in the production of this order are certified as new and not counterfeit. Any deviation to specifications has been authorized by the customer.

MDC Vacuum Products is an ISO 9001:2008 registered company. Key elements of our fully implemented Quality Management System include our Quality Manual, Quality Policy, Product Objectives, Process Measurements, Design Capability and Validation, detailed production Process Travelers, Corrective / Preventive Action System, Nonconforming Material System, Calibration, First Article / First Piece / CNC Program Qualification Process, Internal Audits, and Sub-Supplier Program.

Quality Management Contacts:

MDC, VPD, Hayward, CA (510) 265-3500
MDC, ISI, Sarasota, FL (941) 751-2880
MDC, SSD, San Jose, CA (408) 350-0244

ORDER INFORMATION

Delivery Address:	EDEN CRYOGENICS LLC 8445 RAUSCH DRIVE PLAIN CITY, OH 43064 UNITED STATES
Delivery Site:	MDC VACUUM PRODUCTS
Terms of Delivery:	COLLECT 28F3A6
Ship Via:	UPS COLLECT
PO Number:	BC-3348
Route Id:	
Forward Agent:	
Label Note:	
Our Reference:	LINDA COOPER

614-873-3949 f 614-873-6925

Certificate of Conformance

This is to certify that the material referenced on the above PO and listed on the attached pick list were manufactured to the customer's requirements or to MDC's internal drawing and specifications.

Materials used in the production of this order are certified as new and not counterfeit. Any deviation to specifications has been authorized by the customer.

MDC Vacuum Products is an ISO 9001:2008 registered company. Key elements of our fully implemented Quality Management System include our Quality Manual, Quality Policy, Product Objectives, Process Measurements, Design Capability and Validation, detailed production Process Travelers, Corrective / Preventive Action System, Nonconforming Material System, Calibration, First Article / First Piece / CNC Program Qualification Process, Internal Audits, and Sub-Supplier Program.

Quality Management Contacts:

MDC, VPD, Hayward, CA (510) 265-3500
MDC, ISI, Sarasota, FL (941) 751-2880
MDC, SSD, San Jose, CA (408) 350-0244

ORDER INFORMATION

Delivery Address:	EDEN CRYOGENICS LLC 8445 RAUSCH DRIVE PLAIN CITY, OH 43064 UNITED STATES
Delivery Site:	MDC VACUUM PRODUCTS
Terms of Delivery:	COLLECT 28F3A6
Ship Via:	UPS COLLECT
PO Number:	BC-3348
Route Id:	
Forward Agent:	
Label Note:	
Our Reference:	LINDA COOPER

614-873-3949 f 614-873-6925

Certificate of Conformance

This is to certify that the material referenced on the above PO and listed on the attached pick list were manufactured to the customer's requirements or to MDC's internal drawing and specifications.

Materials used in the production of this order are certified as new and not counterfeit. Any deviation to specifications has been authorized by the customer.

MDC Vacuum Products is an ISO 9001:2008 registered company. Key elements of our fully implemented Quality Management System include our Quality Manual, Quality Policy, Product Objectives, Process Measurements, Design Capability and Validation, detailed production Process Travelers, Corrective / Preventive Action System, Nonconforming Material System, Calibration, First Article / First Piece / CNC Program Qualification Process, Internal Audits, and Sub-Supplier Program.

Quality Management Contacts:

MDC, VPD, Hayward, CA (510) 265-3500
MDC, ISI, Sarasota, FL (941) 751-2880
MDC, SSD, San Jose, CA (408) 350-0244

v3.10.15 192 / 424

swagelok

Packing List

Date: 15-Jan-10

Customer No: S5691.01

Page: 1 of 1

Scioto Valve and Fitting Co.
100 Hoff Rd. Suite M
Westerville, OH 43082
(614) 212-7766
(614) 212-7767 fax
www.swagelok.com/scioto

Charleston Valve and Fitting Co.
P.O. Box 8656, 507 1st Ave.
South Charleston, W. Va. 25303
(304) 744-3461
(304) 744-1453 fax
www.swagelok.com/charleston

Bill To: EDEN CRYOGENICS, LLC
8445 RAUSCH DRIVE
ATTN: ACCOUNTS PAYABLE
PLAIN CITY, OH, 43064

Ship To: EDEN CRYOGENICS, LLC
8445 RAUSCH DRIVE
PLAIN CITY, OH, 43064

PO Number: BC-3349
Order Date: 7-Jan-10
Cust. Contact: A. DIMASSO

Order No: 0001076555
Entered By: Michael
Proposal No: 053753

Shipment Method
UPS

☑	Line	Description	Location	Qty Ordered	Qty Shipped	Qty B/O	Unit Price	Amount
053753	1	SS-16-VCR-1 Female VCR Nut, 1"		2	2	0		
		CUSTOMER REQUIRES C OF C ON ALL ORDERS						

Order Picked By:	Order Shipped By:	**Subtotal**
Customer Notified By:	Date:	**Freight**
ms Received By:	Date:	

COMPLETE

All claims and shortages must be reported within 10 days after receipt of shipment.
Returns require prior authorization and are subject to a 20% restocking charge.
Factory special and custom configured items are non-cancelable and non-returnable.

yelok

Packing List

Date: 12-Jan-10

Customer No: S5691.01

Page: 1 of 1

ɹto Valve and Fitting Co.
) Hoff Rd. Suite M
esterville, OH 43082
(614) 212-7766
(614) 212-7767 fax
www.swagelok.com/scioto

Charleston Valve and Fitting Co.
P.O. Box 8656, 507 1st Ave.
South Charleston, W. Va. 25303
(304) 744-3461
(304) 744-1453 fax
www.swagelok.com/charleston

Bill To: EDEN CRYOGENICS, LLC
8445 RAUSCH DRIVE
ATTN: ACCOUNTS PAYABLE
PLAIN CITY, OH 43064

Ship To: EDEN CRYOGENICS, LLC
8445 RAUSCH DRIVE
PLAIN CITY, OH 43064

PO Number: BC-3349
Order Date: 7-Jan-10
Cust. Contact: A. DIMASSO

Order No: 0001076555
Entered By: Michael
Proposal No: 053625

Shipment Method
UPS

☑	Line	Description	Location	Qty Ordered	Qty Shipped	Qty B/O	Unit Price	Amount
053625	1	SS-16-VCR-1 Female VCR Nut, 1"		7	5	2		
053625	2	SS-16-VCR-3 VCR Gland, 1" Tube SW		7	7	0		
053625	3	SS-16-VCR-4 Male VCR Nut, 1"		7	7	0		
053625	4	SS-16-VCR-2-VS Stainless Steel VCR Unpla		7	7	0		
		CUSTOMER REQUIRES C OF C ON ALL ORDERS						

Order Picked By:	Order Shipped By:	**Subtotal**	
Customer Notified By:	Date:	**Freight**	
ns Received By:	Date:		

PARTIAL

All claims and shortages must be reported within 10 days after receipt of shipment.
Returns require prior authorization and are subject to a 20% restocking charge.
Factory special and custom configured items are non-cancelable and non-returnable.

Swagelok

Swagelok Company
29500 Solon Rd
Solon, OH 44139 U.S.A

440.349.5600
440.519.4997 fax

Certificate of Compliance (EN 10204-2.1)

Distributor	Customer	Customer PO#
Scioto Valve & Fitting Co. 200 Hoff Road Suite M Westerville, OH 43082	EDEN CRYOGENICS, LLC 8445 RAUSCH DRIVE PLAIN CITY, OH 43064	BC-3349

No.	Part Number	Qty
1	SS-16-VCR-1	7
2	SS-16-VCR-4	7

Swagelok products referenced above are manufactured from material purchased and certified as being in accordance with the specification(s) listed below.

The material stipulations included in this certification do not include such components as snap rings, springs, balls, o-rings, gaskets, jam nuts, space collars, seals, locking dogs, lanyards, or sleeves.

Stainless steel material has passed the Intergranular Corrosion Test requirements of EN ISO 3651-2, Method A, and/or ASTM A-262 Practice A or E.

All parts were cleaned and packaged in accordance with Swagelok Specifications.

MATERIAL STANDARDS

Components	Material	Standards
Shaped Fittings	F316 Stainless Steel Forgings	ASTM A182, ASME SA182
Straight Fittings	316 Stainless Steel Bar	ASTM A276, ASTM A479, ASME SA479

The Swagelok® products specified above are certified for use in commercial-grade (non-Nuclear Safety Related) applications and were manufactured in accordance with Swagelok Company's Quality Assurance Manual (latest revision, revision H, dated December 10, 2007). Swagelok Company's Quality System is approved to ISO 9001 (BSI Certificate # FM01729).

Certifications Supervisor
Jonathan Seewald

Swagelok

Swagelok Company
29500 Solon Rd
Solon, OH 44139 U.S.A

440.349.5600
440.519.4997 fax

Certificate of Compliance (EN 10204-2.1)

Distributor	Customer	Customer PO#
Scioto Valve & Fitting Co. 200 Hoff Road Suite M Westerville, OH 43082	EDEN CRYOGENICS, LLC 8445 RAUSCH DRIVE PLAIN CITY, OH 43064	BC-3349

No.	Part Number	Qty
1	SS-16-VCR-CP	7

Information contained in the above customer address column (marked as "Customer") and area marked "Reference" (when applicable) of this certification are for reference purposes only. Swagelok Company makes no stipulations, nor takes responsibility, for the accuracy or reliability of such information.

Swagelok products referenced above are manufactured from material purchased and certified as being in accordance with the specification(s) listed below.

Swagelok products are manufactured under conditions which are free from mercury. No Mercury bearing components have been used in the products of your order and no Mercury bearing instruments or other equipment have been used in their manufacture, assembly, or testing in such a manner as might cause contamination.

No asbestos or asbestos-containing components are used in Swagelok brand products.

All parts were cleaned and packaged in accordance with Swagelok Specifications.

MATERIAL STANDARDS

Components	Material	Standards
Body	316 Stainless Steel Bar	ASTM A276, ASTM A479, ASME SA479
VCR Nut	316 Stainless Steel Bar	ASTM A276, ASTM A479, ASME SA479

The Swagelok® products specified above are certified for use in commercial-grade (non-Nuclear Safety Related) applications and were manufactured in accordance with Swagelok Company's Quality Assurance Manual (latest revision, revision H, dated December 10, 2007). Swagelok Company's Quality System is approved to ISO 9001 (BSI Certificate # FM01729).

Certifications Supervisor
Jonathan Seewald

Swagelok

Swagelok Company
29500 Solon Rd
Solon, OH 44139 U.S.A

440.349.5600
440.519.4997 fax

Certificate of Compliance (EN 10204-2.1)

Distributor	Customer	Customer PO#
Scioto Valve & Fitting Co. 200 Hoff Road Suite M Westerville, OH 43082	EDEN CRYOGENICS, LLC 8445 RAUSCH DRIVE PLAIN CITY, OH 43064	BC-3349

No.	Part Number	Qty
1	SS-16-VCR-3	7

Information contained in the above customer address column (marked as "Customer") and area marked "Reference" (when applicable) of this certification are for reference purposes only. Swagelok Company makes no stipulations, nor takes responsibility, for the accuracy or reliability of such information.

Swagelok products referenced above are manufactured from material purchased and certified as being in accordance with the specification(s) listed below.

Swagelok products are manufactured under conditions which are free from mercury. No Mercury bearing components have been used in the products of your order and no Mercury bearing instruments or other equipment have been used in their manufacture, assembly, or testing in such a manner as might cause contamination.

No asbestos or asbestos-containing components are used in Swagelok brand products.

Stainless steel material has passed the Intergranular Corrosion Test requirements of EN ISO 3651-2, Method A, and/or ASTM A-262 Practice A or E.

All parts were cleaned and packaged in accordance with Swagelok Specifications.

MATERIAL STANDARDS

Components	Material	Standards
Shaped Fittings	F316 Stainless Steel Forgings	ASTM A182, ASME SA182
Straight Fittings	316 Stainless Steel Bar	ASTM A276, ASTM A479, ASME SA479

The Swagelok® products specified above are certified for use in commercial-grade (non-Nuclear Safety Related) applications and were manufactured in accordance with Swagelok Company's Quality Assurance Manual (latest revision, revision H, dated December 10, 2007). Swagelok Company's Quality System is approved to ISO 9001 (BSI Certificate # FM01729).

Certifications Supervisor
Jonathan Seewald

Columbus Fasteners Corp.
1130 Chesapeake Ave.
P.O. Box 12250
Columbus, OH 43212
614-486-6870 614-486-2485

PACKING LIST

ORDER NO.	CUST NO.	PAGE
01055031	123612	

01/15/10 1:29PM
RELEASE 001

SHIP TO: EDEN CRYOGENICS, LLC.
8445 RAUSCH DRIVE
PLAIN CITY OH 43064

SOLD TO: EDEN CRYOGENICS, LLC.
8445 RAUSCH DRIVE
PLAIN CITY OH 43064

CUSTOMER NO.	ORDERED BY	SALESMAN	TERMS		ORDER DATE
BPECRY	SCOTT-EN	CJC/	david	NET 30	01/07/

PURCHASE ORDER NO.	REQUISITION	ORDER DATE	DUE DATE	SHIP DATE	CARRIER	FOB	FILLED BY
-8848		01/07/10	01/07/10	01/15/10	T/S	DEST	LM

ITEM	DESCRIPTION	PRICE	DATE	LOC	UNIT	QUANTITY ORDERED	QUANTITY SHIPPED	QUANTITY BACKORDERED
CERT	NS ** CERTIFICATE OF CONFORMANCE **		01/07/10		EA	1.	1.	
[redacted]								
[redacted]	ST .035		01/07/10	2D8E	EA	40.	40.	
[redacted] 1/4-20 S.S. FIN HEX NUT	ST .007		01/07/10	2E1K	EA	40.	40.	
>>>>>>>>> PKG STOCK - 2E2F <<<<<<<<<<<								
[redacted] -16 S.S. FIN HEX NUT								
>>>>>>>>> PKG STOCK - 2E2F <<<<<<<<<<<								
[redacted]								
>>>>>>>>> PKG STOCK - 2E2F <<<<<<<<<<<								
[redacted]								
>>>>>>>>> PKG STOCK - 2E1B <<<<<<<<<<<								
[redacted] 1/4 S.S. LOCK WASHER	ST .006		01/07/10	2E5C	EA	15.	15.	

NO. OF BOXES: 5 BXS

TOTAL WEIGHT:

No returns accepted without prior authorization, nor of any special order items. All acceptable returns subject to a minimum 10% restocking charge, and must be accompanied by a copy of this invoice.

Received by X

Please print name

Columbus Fasteners Corp.
1152 Chesapeake Ave.
P.O. Box 12250
Columbus, OH 43212
614-486-3670 614-486-2485

PACKING LIST

ORDER NO.	SHIP NO.	PAG
01055031	123612	

01/15/10 1:29PM
RELEASE 001

SHIP TO ▶ EDEN CRYOGENICS, LLC.
8445 RAUSCH DRIVE
PLAIN CITY OH 43064

SOLD TO ▶ EDEN CRYOGENICS, LLC.
8445 RAUSCH DRIVE
PLAIN CITY OH 43064

CUSTOMER ID						ORDER DA
BRICRY	SCOTT-EM	CJC/		david	NET 30	01/07/

PURCHASE ORDER NO.	REFERENCE	ORDER DATE	SHIP DATE	SHIP VIA			FILLED B
0-3346		01/07/10	01/07/10	01/15/10		DEST	lm

NT.	ITEM NO. / DESCRIPTION							QUANTITY BACKORDER
	>>>>>>>>>> PKG STOCK - 2E1C <<<<<<<<<<<							
4	[illegible]							
	[illegible]							
	FHNS125C ST .54	01/07/10	2E8D	EA	63.	63.		
	1-1/4-7 S.S. FIN HEX NUT							
5	[illegible]							
	1-1/4 S.S. LOCK WASHER							
2	[illegible]							
	1/4 [illegible]							
	[illegible] ST .032	01/07/10	3M4E	EA	15.	15.		
	3/8-16x3/8 S.S. HEX CAP SCREW							
6	[illegible]							
	1-1/4-7x6 S.S. HEX CAP SCREW		D2M					

NO. OF BOXES	
	0

No returns accepted without prior authorization, nor of any special order items. All acceptable returns subject to a minimum 10% restocking charge, and must be accompanied by a copy of

Received by X

EDEN CRYOGENICS LLC						Specification Number			Rev.
						BC101-001-022			**C**
						Original Release Date			Sheet
						11/02/2006			1 of 4
Issued	Date	Checked	Date	Engineer	Date	Approved	Date	Approved	Date
JHM	11/02/06	SLH	11/02/06	JHM	11/02/06	SLH	11/02/06	SLH	11/02/06

Welding Procedure Specification
GTAW of Stainless Steel (P-8) Materials WITHOUT Impact Toughness Requirements.
Base Metal Thickness Range from 0.035 to 2 inch.

22

This specification includes the following attachments:

Document	Date	Rev.	Description	# Pages

Rev. Ltr. & Release Date	Description	Initials				
		Issued	Checked	Engineer	Approved	Approved
A 11/19/07	CORPORATE NAME CHANGE FROM BREHON CRYOGENICS TO EDEN CRYOGENICS, LLC.	11/19/07				
B 2/15/08	• Added PQR No 004 to qualify up to 2" thick • Increased welding current and voltage ranges to account for thickness increase. • Added 3/32" filler metal • Corrected WPS number on pages	2/15/08				
C 10/29/09	Changed Supporting PQR No. from 001N to 001	10/29/09	JKM	PK	AGH	SLH

Welding Procedure Specification (WPS)

GTAW of Stainless Steel (P-8) Materials WITHOUT Impact Toughness Requirements. Base Metal Thickness Range from 0.035 to 2 inch.

Company Name Eden Cryogenics, LLC. By: John Warnement

WPS No. BC101-001-022 Date: 11-2-2006 Supporting PQR No.(s) 001, 002 & 004

Revision No. C Date 10-29-2009

Welding Process(es) GTAW Type (s) Manual

JOINTS (QW-402)

Joint Design **See Page 4 for Weld Joint Details**

Backing With or Without

Backing Material (Type)

☒ Metal ☐ Nonfusing Metal

☐ Nonmetalic ☐ Other

Details

See Page 4 for Weld Joint Details

BASE METALS (QW-403)

P-No. 8 Group No. All to P-No. 8 Group No. All

Examples of P8 Base Metals (all P8 Base Metals are qualified)

Specification type and grade Types 304, 304L, 316, 316L

Thickness Range:

Base Metal: Groove 0.035 to 2 inch Fillet ALL

Other

FILLER METALS (QW-404)

Spec. No. (SFA)	A5.9	**Base Metals welded with Filler Metal on same row**	
AWS No. (Class)		304 to 304	ER308 or ER308L
F-No.	6	304 to 304L	ER308 or ER308L
A-No.	8	304L to 304L	ER308L
Size of Filler Metal	0.035, 0.045, 1/16, 3/32 inch		
Weld Metal Thickness Range:		316 to 316 316 to 316L	ER316 or ER316L ER316 or ER316L
Groove	0.035 to 2 inch	316L to 316L	ER316L
Fillet	ALL		
Electrode-Flux (Class)	N/A		
Flux Trade Name	N/A		
Consumable Insert	N/A		

Other

POSITIONS (QW-405)

Position(s) of Groove	ALL		
Welding Progression:	Up	X	Down
Position(s) of Fillet	ALL		

POST WELD HEAT TREATMENT (QW-407)

Temperature Range	None
Time Range	None

PREHEAT (QW-406)

Preheat Temp. Min.	70°F
Interpass Temp. Max.	350°F
Preheat Maintenance	None

GAS (QW-408)

	Gas(es)	(Mixture)	Flow Rate
Shielding	Argon	100	20 - 40 cfh
Trailing	None		
Backing	Argon	100	5 - 15 cfh

ELECTRICAL CHARACTERISTICS (QW-409)

Current AC or DC	DC	Polarity	Straight
Amps (Range)	20 - 250	Volts (Range)	10 - 18

Tungsten Electrode Size and Type: 1/16 or 3/32-inch diameter 2% Thoriated

Mode of Metal Transfer for GMAW: N/A
(Spray arc, short circuiting arc, etc.)

Electrode Wire feed speed range: N/A

TECHNIQUE (QW-410)

String or Weave Bead	String or Weave
Orifice or Gas Cup Size	No. 3 - 12
Initial and Interpass Cleaning	Brush or grind to remove oxides and contaminants from weld joint surfaces and a minimum of 1 inch from weld joint edges. Use tools (e.g., brushes, grinding wheels, etc.) that have NOT been used on carbon steel.
Method of Back Gouging	N/A
Oscillation	N/A
Contact Tube to Work Distance	N/A
Multiple or Single Pass (per side)	Single or Multiple
Multiple or Single Electrodes	Single
Travel Speed (Range)	N/A
Peening	None
Other	

Weld Joint Designs:

If Weld Joint Design is NOT designated on Engineering Drawing use one of the applicable weld joint designs below.

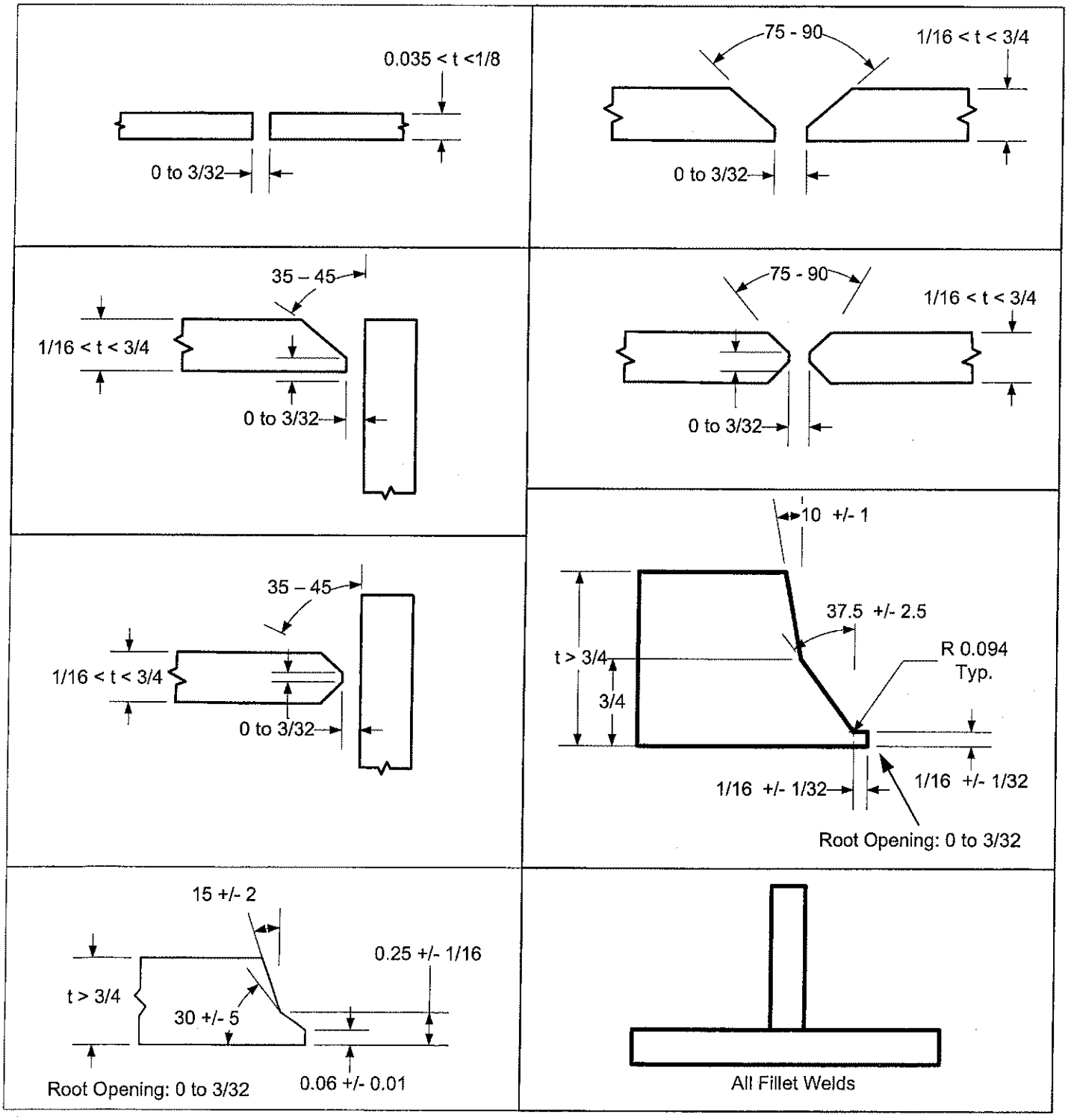

WELDER PERFORMANCE QUALIFICATIONS (WPQ)
(SEE QW-301, SECTION IX, ASME BOILER AND PRESSURE VESSEL CODE)

Welders Name **Andrew Powers** Identification No. **C-35**

Test Description

Identification of WPS followed **BC101-001-022** ☒ Test Coupon ☐ Production weld
Welded Samples for PQR No(s) **001, 002 & 004**
Specification of base metal(s) **SA-240 & A169-04** Thickness: **0.035 & .5 in.**

Testing Conditions and Qualification Limits

Welding Variables (QW-350)	Actual values	Range qualified
Welding process	GTAW	GTAW
Type (i.e., manual, semi-auto) used	Manual	Manual
Backing (metal, weld metal, double-welded, etc.)	With	With or Without
☒ Plate	.5"	2"
☒ Pipe (enter diameter, if pipe or tube)	0.5 inch dia.	0.5 to unlimited
Base metal P- or S-Number to P-or S-Number	8 to 8	P1 through P11, including P5A, 5B, & 5C
Filler metal or electrode specification(s) (SFA) (info only)	A5.9	
Filler metal or electrode classification(s) (info only)	ER308L	
Filler metal F-Number(s)	6	6
Consumable insert (GTAW or PAW)	None	None
Filler type (solid/metal or flux cored/powder (GTAW or PAW)	Bare (Solid)	Bare (Solid)
Deposit thickness for each base metal form		
Base Metal : Plate 3 layers minimum ☒ Yes ☐ No	0.5 in.	2 in. Max
Base Metal: Pipe 3 layers minimum ☐ Yes ☒ No	0.035 in.	
Position qualified: **Plate**	3G	ALL
Pipe	6G	
Vertical progression (uphill or downhill)	Uphill	Uphill[1]
Inert gas backing (GTAW, PAW, GMAW)	Argon	With Backing Gas[2]
GTAW current type/polarity (AC, DCEP, DCEN)	DCEN	DCEN

1. Cover Pass may be Uphill or Downhill. Root Pass may be uphill or downhill, if removed Root Pass is removed in preparation of welding second side
2. Requalification is not required when welding a single-sided butt joint is welded with a backing strip or a doulble-welded butt joint or a fillet weld.

RESULTS

Visual Examination of Completed Weld (QW-302.4) **Passed**

☒Bend test; ☒Transverse root and face [QW-462.3 (a)]; ☐Longitudinal root and face [QW-462.3 (b)]; ☒Side (QW-462.2);

Type	Result	Type	Result
Side Bend 1 QW-462.2	Pass - No Indications	Root Bend 1 QW-462.3(a) note b	Pass - No Indications
Side Bend 2 QW-462.2	Pass - No Indications	Root Bend 2 QW-462.3(a) note b	Pass - No Indications
Side Bend 3 QW-462.2	Pass - No Indications	Face Bend 1 QW-462.3(a) note b	Pass - No Indications
Side Bend 4 QW-462.2	Pass - No Indications	Face Bend 2 QW-462.3(a) note b	Pass - No Indications

Mechanical testing by: John Warnement Laboratory Test no.

Welding supervised by John Warnement

We certify that the statements in this record are correct and that the test coupons were prepared, welded and tested in accordance with the requirements of Section IX of the ASME Code.

Organization: Eden Cryogenics

Date: 12/23/09 By: John Meister

Revised from 10/24/06 QW-484A as Brehon Cryogenics

WELDER PERFORMANCE QUALIFICATIONS (WPQ)
(SEE QW-301, SECTION IX, ASME BOILER AND PRESSURE VESSEL CODE)

Welders Name **Tam Van Vo** Identification No. **C-1**

Test Description

Identification of WPS followed **BC101-001-022** ☒ Test Coupon ☐ Production weld
Welded Samples for PQR No(s) **001, 002 & 004**
Specification of base metal(s) **SA-240 & A169-04** Thickness: **0.035 & .375 in.**

Testing Conditions and Qualification Limits

Welding Variables (QW-350)	Actual values	Range qualified
Welding process	GTAW	GTAW
Type (i.e., manual, semi-auto) used	Manual	Manual
Backing (metal, weld metal, double-welded, etc.)	With	With or Without
☒ Plate	.375"	.75 in.
☒ Pipe (enter diameter, if pipe or tube)	0.5 inch dia.	0.5 to unlimited
Base metal P- or S-Number to P-or S-Number	8 to 8	P1 through P11, including P5A, 5B, & 5C
Filler metal or electrode specification(s) (SFA) (info only)	A5.9	
Filler metal or electrode classification(s) (info only)	ER308L	
Filler metal F-Number(s)	6	6
Consumable insert (GTAW or PAW)	None	None
Filler type (solid/metal or flux cored/powder (GTAW or PAW)	Bare (Solid)	Bare (Solid)
Deposit thickness for each base metal form		
Base Metal : Plate 3 layers minimum ☒ Yes ☐ No	0.375 in.	.75 in. Max
Base Metal: Pipe 3 layers minimum ☐ Yes ☒ No	0.035 in.	
Position qualified: **Plate**	3G	ALL
Pipe	6G	
Vertical progression (uphill or downhill)	Uphill	Uphill[1]
Inert gas backing (GTAW, PAW, GMAW)	Argon	With Backing Gas[2]
GTAW current type/polarity (AC, DCEP, DCEN)	DCEN	DCEN

1. Cover Pass may be Uphill or Downhill. Root Pass may be uphill or downhill, if removed Root Pass is removed in preparation of welding second side
2. Requalification is not required when welding a single-sided butt joint is welded with a backing strip or a double-welded butt joint or a fillet weld.

RESULTS

Visual Examination of Completed Weld (QW-302.4) **Passed**

☒Bend test; ☒Transverse root and face [QW-462.3 (a)]; ☐Longitudinal root and face [QW-462.3 (b)]; ☒Side (QW-462.2);

Type	Result	Type	Result
Side Bend 1 QW-462.3(a)	Pass - No Indications	Root Bend 1 QW-462.3(a) note b	Pass - No Indications
Side Bend 2 QW-462.3(a)	Pass - No Indications	Root Bend 2 QW-462.3(a) note b	Pass - No Indications
Side Bend 3 QW-462.3(a)	Pass - No Indications	Face Bend 1 QW-462.3(a) note b	Pass - No Indications
Side Bend 4 QW-462.3(a)	Pass - No Indications	Face Bend 2 QW-462.3(a) note b	Pass - No Indications

Mechanical testing by: CTL Engineering Laboratory Test no. CTL Project No. 06030530COL
CTL Project No. 06030520COL

Welding supervised by John Warnement

We certify that the statements in this record are correct and that the test coupons were prepared, welded and tested in accordance with the requirements of Section IX of the ASME Code.

Organization: Eden Cryogenics

Date: 2/15/09 By: John Warnement

Revised from 10/24/06 QW-484A as Brehon Cryogenics

WELDER PERFORMANCE QUALIFICATIONS (WPQ)
(SEE QW-301, SECTION IX, ASME BOILER AND PRESSURE VESSEL CODE)

Welders Name **Richard Kennedy** Identification No. **C-2**

Test Description

Identification of WPS followed **BC101-001-022** ☒ Test Coupon ☐ Production weld

Welded Samples for PQR No(s) **001, 002 & 004**

Specification of base metal(s) **SA-240 & A169-04** Thickness: **0.035 & .500 in.**

Testing Conditions and Qualification Limits

Welding Variables (QW-350)	Actual values	Range qualified
Welding process	GTAW	GTAW
Type (i.e., manual, semi-auto) used	Manual	Manual
Backing (metal, weld metal, double-welded, etc.)	With	With or Without
☒ Plate	.500"	2 in.
☒ Pipe (enter diameter, if pipe or tube)	0.5 inch dia.	0.5 to unlimited
Base metal P- or S-Number to P-or S-Number	8 to 8	P1 through P11, including P5A, 5B, & 5C
Filler metal or electrode specification(s) (SFA) (info only)	A5.9	
Filler metal or electrode classification(s) (info only)	ER308L	
Filler metal F-Number(s)	6	6
Consumable insert (GTAW or PAW)	None	None
Filler type (solid/metal or flux cored/powder (GTAW or PAW)	Bare (Solid)	Bare (Solid)
Deposit thickness for each base metal form		
Base Metal : Plate 3 layers minimum ☒ Yes ☐ No	0.500 in.	2 in. Max
Base Metal: Pipe 3 layers minimum ☐ Yes ☒ No	0.035 in.	
Position qualified: **Plate**	3G	ALL
Pipe	6G	
Vertical progression (uphill or downhill)	Uphill	Uphill[1]
Inert gas backing (GTAW, PAW, GMAW)	Argon	With Backing Gas[2]
GTAW current type/polarity (AC, DCEP, DCEN)	DCEN	DCEN

1. Cover Pass may be Uphill or Downhill. Root Pass may be uphill or downhill, if removed Root Pass is removed in preparation of welding second side

2. Requalification is not required when welding a single-sided butt joint is welded with a backing strip or a doulble-welded butt joint or a fillet weld.

RESULTS

Visual Examination of Completed Weld (QW-302.4) **Passed**

☒Bend test; ☒Transverse root and face [QW-462.3 (a)]; ☐Longitudinal root and face [QW-462.3 (b)]; ☒Side (QW-462.2);

Type	Result	Type	Result
Side Bend 1 QW-462.3(a)	Pass - No Indications	Root Bend 1 QW-462.3(a) note b	Pass - No Indications
Side Bend 2 QW-462.3(a)	Pass - No Indications	Root Bend 2 QW-462.3(a) note b	Pass - No Indications
Side Bend 3 QW-462.3(a)	Pass - No Indications	Face Bend 1 QW-462.3(a) note b	Pass - No Indications
Side Bend 4 QW-462.3(a)	Pass - No Indications	Face Bend 2 QW-462.3(a) note b	Pass - No Indications

Mechanical testing by: John Warneement Laboratory Test no.

Welding supervised by John Warnement

We certify that the statements in this record are correct and that the test coupons were prepared, welded and tested in accordance with the requirements of Section IX of the ASME Code.

Organization: Eden Cryogenics

Date: 2/15/08 By: John Warnement

Revised from 10/24/06 QW-484A as Brehon Cryogenics

WELDER PERFORMANCE QUALIFICATIONS (WPQ)
(SEE QW-301, SECTION IX, ASME BOILER AND PRESSURE VESSEL CODE)

Welders Name **Bradley DeMent** Identification No. **C-3**

Test Description

Identification of WPS followed **BC101-001-022** ☒ Test Coupon ☐ Production weld
Welded Samples for PQR No(s) **001, 002 & 004**
Specification of base metal(s) **SA-240 & A169-04** Thickness: **0.035 & .500 in.**

Testing Conditions and Qualification Limits

Welding Variables (QW-350)	Actual values	Range qualified
Welding process	GTAW	GTAW
Type (i.e., manual, semi-auto) used	Manual	Manual
Backing (metal, weld metal, double-welded, etc.)	With	With or Without
☒ Plate	.500"	
☒ Pipe (enter diameter, if pipe or tube)	0.5 inch dia.	0.5 to unlimited
Base metal P- or S-Number to P-or S-Number	8 to 8	P1 through P11, including P5A, 5B, & 5C
Filler metal or electrode specification(s) (SFA) (info only)	A5.9	
Filler metal or electrode classification(s) (info only)	ER308L	
Filler metal F-Number(s)	6	6
Consumable insert (GTAW or PAW)	None	None
Filler type (solid/metal or flux cored/powder (GTAW or PAW)	Bare (Solid)	Bare (Solid)
Deposit thickness for each base metal form		
Base Metal : Plate 3 layers minimum ☒ Yes ☐ No	0.500 in.	2 in. Max
Base Metal: Pipe 3 layers minimum ☐ Yes ☒ No	0.035 in.	
Position qualified: **Plate**	3G	ALL
Pipe	6G	
Vertical progression (uphill or downhill)	Uphill	Uphill[1]
Inert gas backing (GTAW, PAW, GMAW)	Argon	With Backing Gas[2]
GTAW current type/polarity (AC, DCEP, DCEN)	DCEN	DCEN

1. Cover Pass may be Uphill or Downhill. Root Pass may be uphill or downhill, if removed Root Pass is removed in preparation of welding second side
2. Requalification is not required when welding a single-sided butt joint is welded with a backing strip or a doulble-welded butt joint or a fillet weld.

RESULTS

Visual Examination of Completed Weld (QW-302.4) **Passed**

☒Bend test; ☒Transverse root and face [QW-462.3 (a)]; ☐Longitudinal root and face [QW-462.3 (b)]; ☒Side (QW-462.2);

Type	Result	Type	Result
Side Bend 1 QW-462.3(a)	Pass - No Indications	Root Bend 1 QW-462.3(a) note b	Pass - No Indications
Side Bend 2 QW-462.3(a)	Pass - No Indications	Root Bend 2 QW-462.3(a) note b	Pass - No Indications
Side Bend 3 QW-462.3(a)	Pass - No Indications	Face Bend 1 QW-462.3(a) note b	Pass - No Indications
Side Bend 4 QW-462.3(a)	Pass - No Indications	Face Bend 2 QW-462.3(a) note b	Pass - No Indications

Mechanical testing by: John Warnement

Welding supervised by John Warnement

We certify that the statements in this record are correct and that the test coupons were prepared, welded and tested in accordance with the requirements of Section IX of the ASME Code.

Organization: Eden Cryogenics

Date: 2/5/07 By: John Warnement

Revised from 10/24/06 QW-484A as Brehon Cryogenics

WELDER PERFORMANCE QUALIFICATIONS (WPQ)
(SEE QW-301, SECTION IX, ASME BOILER AND PRESSURE VESSEL CODE)

Welders Name **Scott Walker** Identification No. **C-10**

Test Description

Identification of WPS followed **BC101-001-022** ☒ Test Coupon ☐ Production weld
Welded Samples for PQR No(s) **001, 002 & 004**
Specification of base metal(s) **SA-240 & A169-04** Thickness: **0.035 & .5 in.**

Testing Conditions and Qualification Limits

Welding Variables (QW-350)	Actual values	Range qualified
Welding process	GTAW	GTAW
Type (i.e., manual, semi-auto) used	Manual	Manual
Backing (metal, weld metal, double-welded, etc.)	With	With or Without
☒ Plate	.5"	2"
☒ Pipe (enter diameter, if pipe or tube)	0.5 inch dia.	0.5 to unlimited
Base metal P- or S-Number to P-or S-Number	8 to 8	P1 through P11, including P5A, 5B, & 5C
Filler metal or electrode specification(s) (SFA) (info only)	A5.9	
Filler metal or electrode classification(s) (info only)	ER308L	
Filler metal F-Number(s)	6	6
Consumable insert (GTAW or PAW)	None	None
Filler type (solid/metal or flux cored/powder (GTAW or PAW)	Bare (Solid)	Bare (Solid)
Deposit thickness for each base metal form		
Base Metal : Plate 3 layers minimum ☒ Yes ☐ No	0.5 in.	2 in. Max
Base Metal: Pipe 3 layers minimum ☐ Yes ☒ No	0.035 in.	
Position qualified: **Plate**	3G	ALL
Pipe	6G	
Vertical progression (uphill or downhill)	Uphill	Uphill[1]
Inert gas backing (GTAW, PAW, GMAW)	Argon	With Backing Gas[2]
GTAW current type/polarity (AC, DCEP, DCEN)	DCEN	DCEN

1. Cover Pass may be Uphill or Downhill. Root Pass may be uphill or downhill, if removed Root Pass is removed in preparation of welding second side
2. Requalification is not required when welding a single-sided butt joint is welded with a backing strip or a doulble-welded butt joint or a fillet weld.

RESULTS

Visual Examination of Completed Weld (QW-302.4) **Passed**

☒Bend test; ☒Transverse root and face [QW-462.3 (a)]; ☐Longitudinal root and face [QW-462.3 (b)]; ☒Side (QW-462.2);

Type	Result	Type	Result
Side Bend 1 QW-462.3(a)	Pass - No Indications	Root Bend 1 QW-462.3(a) note b	Pass - No Indications
Side Bend 2 QW-462.3(a)	Pass - No Indications	Root Bend 2 QW-462.3(a) note b	Pass - No Indications
Side Bend 3 QW-462.3(a)	Pass - No Indications	Face Bend 1 QW-462.3(a) note b	Pass - No Indications
Side Bend 4 QW-462.3(a)	Pass - No Indications	Face Bend 2 QW-462.3(a) note b	Pass - No Indications

Mechanical testing by: John Warnement Laboratory Test no.
Welding supervised by John Warnement
We certify that the statements in this record are correct and that the test coupons were prepared, welded and tested in accordance with the requirements of Section IX of the ASME Code.

Organization: Eden Cryogenics
Date: 1/25/09 By: John Warnement

Revised from 10/24/06 QW-484A as Brehon Cryogenics

WELDER PERFORMANCE QUALIFICATIONS (WPQ)
(SEE QW-301, SECTION IX, ASME BOILER AND PRESSURE VESSEL CODE)

Welders Name **Brandon Arnold** Identification No. **C-41**

Test Description

Identification of WPS followed **BC101-001-022** ☒ Test Coupon ☐ Production weld
Welded Samples for PQR No(s) **001, 002, 004**
Specification of base metal(s) **SA-240 & A169-04** Thickness: **0.035 & .5 in.**

Testing Conditions and Qualification Limits

Welding Variables (QW-350)	Actual values	Range qualified
Welding process	GTAW	GTAW
Type (i.e., manual, semi-auto) used	Manual	Manual
Backing (metal, weld metal, double-welded, etc.)	With	With or Without
☒ Plate	.5"	2"
☒ Pipe (enter diameter, if pipe or tube)	0.5 inch dia.	0.5 to unlimited
Base metal P- or S-Number to P-or S-Number	8 to 8	P1 through P11, including P5A, 5B, & 5C
Filler metal or electrode specification(s) (SFA) (info only)	A5.9	
Filler metal or electrode classification(s) (info only)	ER308L	
Filler metal F-Number(s)	6	6
Consumable insert (GTAW or PAW)	None	None
Filler type (solid/metal or flux cored/powder (GTAW or PAW)	Bare (Solid)	Bare (Solid)
Deposit thickness for each base metal form		
Base Metal : Plate 3 layers minimum ☒ Yes ☐ No	0.5 in.	2 in. Max
Base Metal: Pipe 3 layers minimum ☐ Yes ☒ No	0.035 in.	
Position qualified: **Plate**	3G	ALL
Pipe	6G	
Vertical progression (uphill or downhill)	Uphill	Uphill[1]
Inert gas backing (GTAW, PAW, GMAW)	Argon	With Backing Gas[2]
GTAW current type/polarity (AC, DCEP, DCEN)	DCEN	DCEN

1. Cover Pass may be Uphill or Downhill. Root Pass may be uphill or downhill, if removed Root Pass is removed in preparation of welding second side
2. Requalification is not required when welding a single-sided butt joint is welded with a backing strip or a double-welded butt joint or a fillet weld.

Visual Examination of Completed Weld (QW-302.4) **Results: Passed**
☒Bend test; ☒Transverse root and face [QW-462.3 (a)]; ☐Longitudinal root and face [QW-462.3 (b)]; ☒Side (QW-462.2);

Type	Result	Type	Result
Side Bend 1 QW-462.2	Pass - No Indications	Root Bend 1 QW-462.3(a) note b	Pass - No Indications
Side Bend 2 QW-462.2	Pass - No Indications	Root Bend 2 QW-462.3(a) note b	Pass - No Indications
Side Bend 3 QW-462.2	Pass - No Indications	Face Bend 1 QW-462.3(a) note b	Pass - No Indications
Side Bend 4 QW-462.2	Pass - No Indications	Face Bend 2 QW-462.3(a) note b	Pass - No Indications

Mechanical testing by: Eden Cryogenics
Welding supervised by John Warnement
We certify that the statements in this record are correct and that the test coupons were prepared, welded and tested in accordance with the requirements of Section IX of the ASME Code.

Organization: Eden Cryogenics
Date: 1/4/10 By: John Warnement

WELDER PERFORMANCE QUALIFICATIONS (WPQ)
(SEE QW-301, SECTION IX, ASME BOILER AND PRESSURE VESSEL CODE)

Welders Name **Sam Taylor** Identification No. **C-45**

Test Description

Identification of WPS followed **BC101-001-022** ☒ Test Coupon ☐ Production weld
Welded Samples for PQR No(s) **001, 002, 004**
Specification of base metal(s) **SA-240 & A169-04** Thickness: **0.035 & .500 in.**

Testing Conditions and Qualification Limits

Welding Variables (QW-350)	Actual values	Range qualified
Welding process	GTAW	GTAW
Type (i.e., manual, semi-auto) used	Manual	Manual
Backing (metal, weld metal, double-welded, etc.)	With	With or Without
☒ Plate	.500"	2"
☒ Pipe (enter diameter, if pipe or tube)	0.5 inch dia.	0.5 to unlimited
Base metal P- or S-Number to P-or S-Number	8 to 8	P1 through P11, including P5A, 5B, & 5C
Filler metal or electrode specification(s) (SFA) (info only)	A5.9	
Filler metal or electrode classification(s) (info only)	ER308L	
Filler metal F-Number(s)	6	6
Consumable insert (GTAW or PAW)	None	None
Filler type (solid/metal or flux cored/powder (GTAW or PAW)	Bare (Solid)	Bare (Solid)
Deposit thickness for each base metal form		
Base Metal : Plate 3 layers minimum ☒ Yes ☐ No	0.500 in.	2 in. Max
Base Metal: Pipe 3 layers minimum ☐ Yes ☒ No	0.035 in.	
Position qualified: **Plate**	3G	ALL
Pipe	6G	
Vertical progression (uphill or downhill)	Uphill	Uphill[1]
Inert gas backing (GTAW, PAW, GMAW)	Argon	With Backing Gas[2]
GTAW current type/polarity (AC, DCEP, DCEN)	DCEN	DCEN

1. Cover Pass may be Uphill or Downhill. Root Pass may be uphill or downhill, if removed Root Pass is removed in preparation of welding second side
2. Requalification is not required when welding a single-sided butt joint is welded with a backing strip or a doulble-welded butt joint or a fillet weld.

Visual Examination of Completed Weld (QW-302.4) **Results: Passed**
☒Bend test; ☒Transverse root and face [QW-462.3 (a)]; ☐Longitudinal root and face [QW-462.3 (b)]; ☒Side (QW-462.2);

Type (plate)	Result	Type (pipe)	Result
Side Bend 1 QW-462.2	Pass - No Indications	Root Bend 1 QW-462.3(a) note b	Pass - No Indications
Side Bend 2 QW-462.2	Pass - No Indications	Root Bend 2 QW-462.3(a) note b	Pass - No Indications
Side Bend 3 QW-462.2	Pass - No Indications	Face Bend 1 QW-462.3(a) note b	Pass - No Indications
Side Bend 4 QW-462.2	Pass - No Indications	Face Bend 2 QW-462.3(a) note b	Pass - No Indications

Mechanical testing by: Eden Cryogenics
Welding supervised by John Warnement
We certify that the statements in this record are correct and that the test coupons were prepared, welded and tested in accordance with the requirements of Section IX of the ASME Code.

Organization: Eden Cryogenics
Date: 2/15/10 By: John Meister

WELDER PERFORMANCE QUALIFICATIONS (WPQ)
(SEE QW-301, SECTION IX, ASME BOILER AND PRESSURE VESSEL CODE)

Welders Name **Mike Zimmerman** Identification No. **C-46**

Test Description

Identification of WPS followed **BC101-001-022** ☒ Test Coupon ☐ Production weld
Welded Samples for PQR No(s) **001, 002, 004**
Specification of base metal(s) **SA-240 & A169-04** Thickness: **0.035 & .500 in.**

Testing Conditions and Qualification Limits

Welding Variables (QW-350)	Actual values	Range qualified
Welding process	GTAW	GTAW
Type (i.e., manual, semi-auto) used	Manual	Manual
Backing (metal, weld metal, double-welded, etc.)	With	With or Without
☒ Plate	.500"	2"
☒ Pipe (enter diameter, if pipe or tube)	0.5 inch dia.	0.5 to unlimited
Base metal P- or S-Number to P-or S-Number	8 to 8	P1 through P11, including P5A, 5B, & 5C
Filler metal or electrode specification(s) (SFA) (info only)	A5.9	
Filler metal or electrode classification(s) (info only)	ER308L	
Filler metal F-Number(s)	6	6
Consumable insert (GTAW or PAW)	None	None
Filler type (solid/metal or flux cored/powder (GTAW or PAW)	Bare (Solid)	Bare (Solid)
Deposit thickness for each base metal form		
Base Metal : Plate 3 layers minimum ☒ Yes ☐ No	0.500 in.	2 in. Max
Base Metal: Pipe 3 layers minimum ☐ Yes ☒ No	0.035 in.	
Position qualified: **Plate**	3G	ALL
Pipe	6G	
Vertical progression (uphill or downhill)	Uphill	Uphill[1]
Inert gas backing (GTAW, PAW, GMAW)	Argon	With Backing Gas[2]
GTAW current type/polarity (AC, DCEP, DCEN)	DCEN	DCEN

1. Cover Pass may be Uphill or Downhill. Root Pass may be uphill or downhill, if removed Root Pass is removed in preparation of welding second side
2. Requalification is not required when welding a single-sided butt joint is welded with a backing strip or a doulble-welded butt joint or a fillet weld.

Visual Examination of Completed Weld (QW-302.4) **Results: Passed**
☒Bend test; ☒Transverse root and face [QW-462.3 (a)]; ☐Longitudinal root and face [QW-462.3 (b)]; ☒Side (QW-462.2);

Type (plate)	Result	Type (pipe)	Result
Side Bend 1 QW-462.2	Pass - No Indications	Root Bend 1 QW-462.3(a) note b	Pass - No Indications
Side Bend 2 QW-462.2	Pass - No Indications	Root Bend 2 QW-462.3(a) note b	Pass - No Indications
Side Bend 3 QW-462.2	Pass - No Indications	Face Bend 1 QW-462.3(a) note b	Pass - No Indications
Side Bend 4 QW-462.2	Pass - No Indications	Face Bend 2 QW-462.3(a) note b	Pass - No Indications

Mechanical testing by: Eden Cryogenics
Welding supervised by John Warnement
We certify that the statements in this record are correct and that the test coupons were prepared, welded and tested in accordance with the requirements of Section IX of the ASME Code.

Organization: Eden Cryogenics
Date: 2/20/10 By: John Meister

FORM U-1A MANUFACTURER'S DATA REPORT FOR PRESSURE VESSELS

(Alternative Form for Single Chamber, Completely Shop or Field Fabricated Vessels Only)

As Required by the Provisions of the ASME Boiler and Pressure Vessel Code Rules, Section VIII, Division 1

1. Manufactured and certified by: Eden Cryogenics LLC. 8445 Rausch Drive Plain City, Ohio 43064 (Name and address of Manufacturer)
2. Manufactured for: Fermi Research Alliance, LLC. P.O. Box 500 Batavia, IL 60510 (Name and address of Purchaser)
3. Location of installation: Fermilab, Batavia Illinois (Name and address)
4. Type: Vertical (Horizontal or vertical tank) | 02128-01 (Manufacturer's serial number) | BC-02128-5820-01 (Drawing number) | 8 (National Board number) | 2010 (Year Built)
5. The chemical and physical properties of all parts meet the requirements of material specification of the ASME BOILER AND PRESSURE VESSEL CODE. The design, construction, and workmanship conform to the ASME rules, Section VIII, Division 1 2007 (Year)

   to A08 {addenda(date)} | -- (Code Case numbers) | -- {Special Service per UG-120(d)}
6. Shell: SA-312-TP304 (Material spec. number, grade) | .1785" (Nominal thickness) | 0 (Corr. Allow.) | 10.42 (inner diameter) | 39.5 (length overall)
7. Seams: welded ({Long. (welded, dbl., sngl., lap,butt)}) | -- {R.T. (spot or full)} | 70% (Eff., %) | -- (H.T. temp.) | -- (Time, hr) | -- ({Girth. (welded, dbl., sngl., lap,butt)}) | -- {R.T. (spot or full)}
8. Heads: (a) SA-312 TP304 (Material spec. number grade or type) (H.T. – time & temp) (b) SA-312 TP304 (Material spec. number grade or type) (H.T. – time & temp)

	Location (Top, Bottom, Ends)	Thickness		Radius		Elliptical Ratio	Conical Apex Angle	Hemispherical Radius	Flat Diameter	Side to Pressure		Category A		
		Min.	Corr.	Crown	Knuckle					Convex	Concave	Type	Full, Spot, None	Eff.
(a)	Top	.1875	0	--	1.91	2:1	--	--	--	--	X	A	NONE	70%
(b)	Bottom	.1875	0	--	1.91	2:1	--	--	--	--	X	A	NONE	70%

If removable, bolts used (describe other fastening) -- (Material spec. number grade, size, number)

9. MAWP 165 psi (Internal) 15 psi (External) at max temp. 932 deg F (Internal) 70 deg F (External) Min. design metal temp. -320 deg F at 165 psi

   Min. design metal temp. -- at -- Hydro., pneu., or comb. test pressure pneu. test @ 188 psig

10. Nozzles, inspection, and safety valve openings:

Purpose (Inlet, Outlet, Drain)	Number	Diameter or Size	Type	Material		Nominal Thickness	Reinforcement Material	How Attached	Location
				Nozzle	Flange				
inlet/outlet	2	1" nps	W.E.	304/304L SA-312	N/A	sch. 10 (.109")	--	UW 16.1 (c)	HEADS
fill	1	3" nps.	W.E.	304/304L SA-312	N/A	sch. 10 (.120")	--	UW 16.1 (c)	HEADS
thermowells	5	1.13" dia	CPL.	304/304L SA-182	N/A	.142"	--	UW 16.1 (c)	SHELL

11. Supports: Skirt no (Yes or No) Lugs 3 (Number) Legs -- (Number) Others -- (Describe) Attached -- (Where and how)
12. Manufacturer's Partial Data Reports properly identified and signed by Commissioned Inspectors have been furnished for the following items of the report:

(List the name of part, item number, Manufacturer's name and identifying stamp)

CERTIFICATE OF SHOP/FIELD COMPLIANCE

We certify that the statements made in this report are correct and that all details of design, material, construction and workmanship of this vessel conform to the ASME BOILER AND PRESSURE VESSEL CODE, Section VIII, Division 1. "U" Certificate of Authorization Number 37,118 expires Dec 13, 2010

Date 03/25/10 Co. Name EDEN CRYOGENICS LLC. (Manufacturer) Signed [signature] (Representative)

CERTIFICATE OF SHOP/FIELD INSPECTION

Vessel constructed by EDEN CRYOGENICS LLC. at 8445 RAUSCH DRIVE PLAIN CITY OHIO 43064

I, the undersigned, holding a valid commission issued by the National Board of Boiler and Pressure Vessel Inspectors and/or the State or Province of OHIO and employed by HSB-CT have inspected the component described in this Manufacturer's Data Report on MARCH 25, 2010, and state that, to the best of my knowledge and belief, the Manufacturer has constructed this pressure vessel in accordance with ASME BOILER AND PRESSURE VESSEL CODE, Section VIII, Division 1. By signing this certificate neither the Inspector nor his/her employer makes any warranty, expressed or implied, concerning the pressure vessel described in this Manufacturer's Data Report. Furthermore, neither the Inspector nor his/her employer shall be liable in any manner for any personal injury or property damage or a loss of any kind arising from or connected with this inspection.

Date 3/25/10 Signed Brock Seerhoff (Authorized Inspector) Commissions NB# 13582A, OH874 [National Board (incl endorsements) State, Province and number]

FORM U-1A MANUFACTURER'S DATA REPORT FOR PRESSURE VESSELS

(Alternative Form for Single Chamber, Completely Shop or Field Fabricated Vessels Only)

As Required by the Provisions of the ASME Boiler and Pressure Vessel Code Rules, Section VIII, Division 1

1. Manufactured and certified by: Eden Cryogenics LLC. 8445 Rausch Drive Plain City, Ohio 43064 (Name and address of Manufacturer)
2. Manufactured for: Fermi Research Alliance, LLC. P.O. Box 500 Batavia, IL 60510 (Name and address of Purchaser)
3. Location of installation: Fermilab, Batavia Illinois (Name and address)
4. Type: Vertical (Horizontal or vertical tank) | 02128-02 (Manufacturer's serial number) | BC-02128-5820-02 (Drawing number) | 9 (National Board number) | 2010 (Year Built)
5. The chemical and physical properties of all parts meet the requirements of material specification of the ASME BOILER AND PRESSURE VESSEL CODE. The design, construction, and workmanship conform to the ASME rules, Section VIII, Division 1 2007 (Year)

   to A08 (addenda(date)) | -- (Code Case numbers) | -- {Special Service per UG-120(d)}
6. Shell: SA-312-TP304 (Material spec. number, grade) | .1785" (Nominal thickness) | 0 (Corr. Allow.) | 10.42 (inner diameter) | 39.5 (length overall)
7. Seams: welded ({Long. (welded, dbl., sngl., lap,butt)}) | -- {R.T. (spot or full)} | 70% (Eff., %) | -- (H.T. temp.) | -- (Time, hr) | -- ({Girth. (welded, dbl., sngl., lap,butt)}) | -- {R.T. (spot o full)}
8. Heads: (a) SA-312 TP304 (Material spec. number grade or type) (H.T. – time & temp) (b) SA-312 TP304 (Material spec. number grade or type) (H.T. – time & temp)

	Location (Top, Bottom, Ends)	Thickness		Radius		Elliptical Ratio	Conical Apex Angle	Hemispherical Radius	Flat Diameter	Side to Pressure		Category A		
		Min.	Corr.	Crown	Knuckle					Convex	Concave	Type	Full, Spot, None	Eff.
(a)	Top	.1875	0	--	1.91	2:1	--	--	--	--	X	A	NONE	70%
(b)	Bottom	.1875	0	--	1.91	2:1	--	--	--	--	X	A	NONE	70%

If removable, bolts used (describe other fastening) -- (Material spec. number grade, size, number)

9. MAWP 165 psi (Internal) 15 psi (External) at max temp. 932 deg F (Internal) 70 deg F (External) Min. design metal temp. -320 deg F at 165 psi

   Min. design metal temp. -- at -- Hydro., pneu., or comb. test pressure pneu. test @ 188 psig

10. Nozzles, inspection, and safety valve openings:

Purpose (Inlet, Outlet, Drain)	Number	Diameter or Size	Type	Material		Nominal Thickness	Reinforcement Material	How Attached	Location
				Nozzle	Flange				
inlet/outlet	2	1" nps	W.E.	304/304L SA-312	N/A	sch. 10 (.109")	--	UW 16.1 (c)	HEADS
fill	1	3" nps.	W.E.	304/304L SA-312	N/A	sch. 10 (.120")	--	UW 16.1 (c)	HEADS
thermowells	5	1.13" dia	CPL.	304/304L SA-182	N/A	.142"	--	UW 16.1 (c)	SHELL

11. Supports: Skirt no (Yes or No) Lugs 3 (Number) Legs -- (Number) Others -- (Describe) Attached -- (Where and how)
12. Manufacturer's Partial Data Reports properly identified and signed by Commissioned Inspectors have been furnished for the following items of the report:

(List the name of part, item number, Manufacturer's name and identifying stamp)

CERTIFICATE OF SHOP/FIELD COMPLIANCE

We certify that the statements made in this report are correct and that all details of design, material, construction and workmanship of this vessel conform to the ASME BOILER AND PRESSURE VESSEL CODE, Section VIII, Division 1. "U" Certificate of Authorization Number 37,118 expires Dec 13, 2010

Date 03/25/10 Co. Name EDEN CRYOGENICS LLC. (Manufacturer) Signed [signature] (Representative)

CERTIFICATE OF SHOP/FIELD INSPECTION

Vessel constructed by EDEN CRYOGENICS LLC. at 8445 RAUSCH DRIVE PLAIN CITY OHIO 43064

I, the undersigned, holding a valid commission issued by the National Board of Boiler and Pressure Vessel Inspectors and/or the State or Province of OHIO and employed by HSB-CT have inspected the component described in this Manufacturer's Data Report on MARCH 25, 2010, and state that, to the best of my knowledge and belief, the Manufacturer has constructed this pressure vessel in accordance with ASME BOILER AND PRESSURE VESSEL CODE, Section VIII, Division 1. By signing this certificate neither the Inspector nor his/her employer makes any warranty, expressed or implied, concerning the pressure vessel described in this Manufacturer's Data Report. Furthermore, neither the Inspector nor his/her employer shall be liable in any manner for any personal injury or property damage or a loss of any kind arising from or connected with this inspection.

Date 3/25/10 Signed [signature] (Authorized Inspector) Commissions HB# 13582A, OH 874 [National Board (incl endorsements) State, Province and number]

FORM U-1A MANUFACTURER'S DATA REPORT FOR PRESSURE VESSELS

(Alternative Form for Single Chamber, Complete Shop or Field Fabricated Vessels Only)

As Required by the Provisions of the ASME Boiler and Pressure Vessel Code Rules, Section VIII, Division 1

1. Manufactured and certified by: Eden Cryogenics LLC. 8445 Rausch Drive Plain City, Ohio 43064 (Name and address of Manufacturer)
2. Manufactured for: Fermi Research Alliance, LLC. P.O. Box 500 Batavia, IL 60510 (Name and address of Purchaser)
3. Location of installation: Fermilab, Batavia Illinois (Name and address)
4. Type: Vertical (Horizontal or vertical tank) | 02128-03 (Manufacturer's serial number) | BC-02128-5820-03 (Drawing number) | 10 (National Board number) | 2010 (Year Built)
5. The chemical and physical properties of all parts meet the requirements of material specification of the ASME BOILER AND PRESSURE VESSEL CODE. The design, construction, and workmanship conform to the ASME rules, Section VIII, Division 1 2007 Year

to A08 {addenda(date)} -- (Code Case numbers) -- {Special Service per UG-120(d)}

6. Shell: SA-312-TP304 (Material spec. number, grade) | .1785" (Nominal thickness) | 0 (Corr. Allow.) | 10.42 (inner diameter) | 39.5 (length overall)
7. Seams: welded ({Long. (welded, dbl., sngl., lap,butt)}) | -- {R.T. (spot or full)} | 70% (Eff., %) | -- (H.T. temp.) | -- (Time, hr) | -- ({Girth. (welded, dbl., sngl., lap,butt)}) | -- {R.T. (spot or full)}

8. Heads: (a) SA-312 TP304 (Material spec. number grade or type) (H.T. – time & temp) (b) SA-312 TP304 (Material spec. number grade or type) (H.T. – time & temp)

	Location (Top, Bottom, Ends)	Thickness		Radius		Elliptical Ratio	Conical Apex Angle	Hemispherical Radius	Flat Diameter	Side to Pressure		Category A		
		Min.	Corr.	Crown	Knuckle					Convex	Concave	Type	Full, Spot, None	Eff.
(a)	Top	.1875	0	--	1.91	2:1	--	--	--	--	X	A	NONE	70%
(b)	Bottom	.1875	0	--	1.91	2:1	--	--	--	--	X	A	NONE	70%

If removable, bolts used (describe other fastening) -- (Material spec. number grade, size, number)

9. MAWP 165 psi (Internal) 15 psi (External) at max temp. 932 deg F (Internal) 70 deg F (External) Min. design metal temp. -320 deg F at 165 psi

Min. design metal temp. -- at -- Hydro., pneu., or comb. test pressure pneu. test @ 188 psig

10. Nozzles, inspection, and safety valve openings:

Purpose (Inlet, Outlet, Drain)	Number	Diameter or Size	Type	Material		Nominal Thickness	Reinforcement Material	How Attached	Location
				Nozzle	Flange				
inlet/outlet	2	1" nps	W.E.	304/304L SA-312	N/A	sch. 10 (.109")	--	UW 16.1 (c)	HEADS
fill	1	3" nps.	W.E.	304/304L SA-312	N/A	sch. 10 (.120")	--	UW 16.1 (c)	HEADS
thermowells	5	1.13" dia	CPL.	304/304L SA-182	N/A	.142"	--	UW 16.1 (c)	SHELL

11. Supports: Skirt no (Yes or No) Lugs 3 (Number) Legs -- (Number) Others -- (Describe) Attached -- (Where and how)

12. Manufacturer's Partial Data Reports properly identified and signed by Commissioned Inspectors have been furnished for the following items of the report:

(List the name of part, item number, Manufacturer's name and identifying stamp)

CERTIFICATE OF SHOP/FIELD COMPLIANCE

We certify that the statements made in this report are correct and that all details of design, material, construction and workmanship of this vessel conform to the ASME BOILER AND PRESSURE VESSEL CODE, Section VIII, Division 1. "U" Certificate of Authorization Number 37,118 expires Dec 13, 2010

Date 03/25/10 Co. Name EDEN CRYOGENICS LLC. (Manufacturer) Signed [signature] (Representative)

CERTIFICATE OF SHOP/FIELD INSPECTION

Vessel constructed by EDEN CRYOGENICS LLC. at 8445 RAUSCH DRIVE PLAIN CITY OHIO 43064

I, the undersigned, holding a valid commission issued by the National Board of Boiler and Pressure Vessel Inspectors and/or the State or Province of OHIO and employed by HSB-CT have inspected the component described in this Manufacturer's Data Report on MARCH 25, 2010, and state that, to the best of my knowledge and belief, the Manufacturer has constructed this pressure vessel in accordance with ASME BOILER AND PRESSURE VESSEL CODE, Section VIII, Division 1. By signing this certificate neither the Inspector nor his/her employer makes any warranty, expressed or implied, concerning the pressure vessel described in this Manufacturer's Data Report. Furthermore, neither the Inspector nor his/her employer shall be liable in any manner for any personal injury or property damage or a loss of any kind arising from or connected with this inspection.

Date 3/25/10 Signed [signature] (Authorized Inspector) Commissions NB# 13582 A, OH874 [National Board (incl endorsements) State, Province and number]

EDEN CRYOGENICS, LLC

8445 RAUSCH DRIVE

PLAIN CITY, OHIO 43064

USA

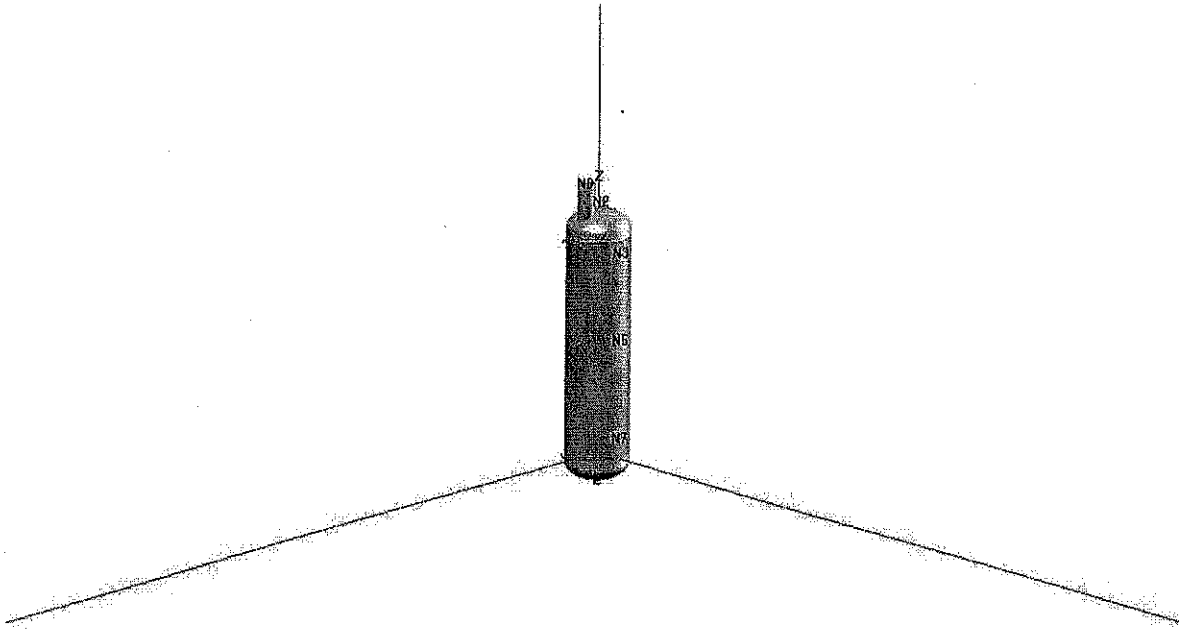

Pressure Vessel Design Calculations

Item: LAR PRESSURE VESSEL
Vessel No: 1
Customer: FERMI NATIONAL LABORATORY
Contract: BC-02128
Designer: ALLAN G. HANSON
Date: OCTOBER 22, 2009
Location: FERMI NATIONAL LABORATORY
Purchaser: TERRY TOPE
Vessel Name: LAR Pressure Vessel
Service: LIQUID ARGON
P.O. Number: BC-0218

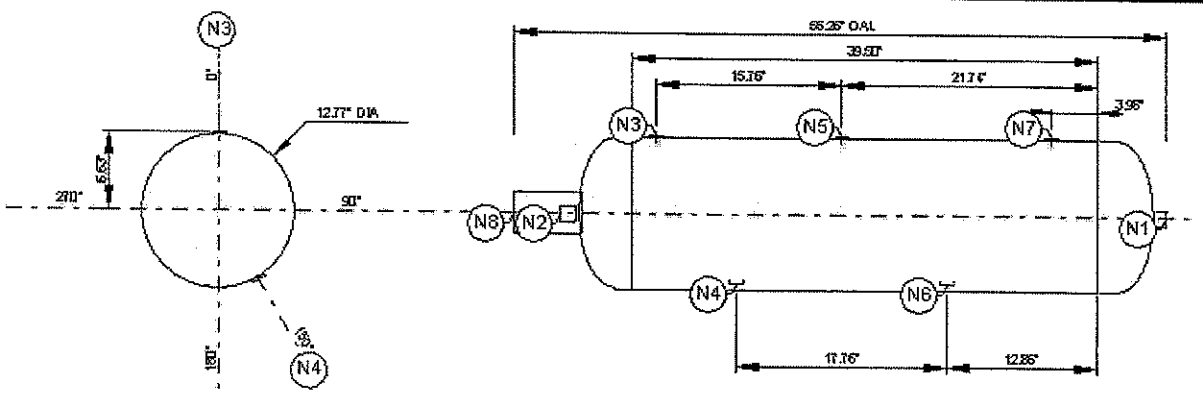

DESIGN DATA

Design Pressure	165 psi
Vacuum Pressure	0 psi
Test Pressure (SHOP)	252.09 psi
Design Temperature	932 °F
MDMT	-320 °F
Corrosion Allowance	0"
Radiography	None
PWHT	None

Estimated Weights

DRY:	111 lb	WET:	111 lb

Materials

Cylinder(s):	SA-312 TP304 Weld & smls pipe
Head(s):	SA-312 TP304 Weld & smls pipe
Transition(s):	
Support:	

NOZZLE SCHEDULE

MARK	NOZZLE	SIZE & SCH	FLANGE	MARK	NOZZLE	SIZE & SCH	FLANGE
N1	Gas Outlet	1" Sch 10S					
N7	Copy of Thermocouple	0.500" Class 3000 -					
N6	Copy of Thermocouple	0.500" Class 3000 -					
N5	Copy of Thermocouple	0.500" Class 3000 -					
N4	Copy of Thermocouple	0.500" Class 3000 -					
N3	Thermocouple	0.500" Class 3000 -					
N8	Fill Nozzle	3" Sch 10S					
N2	Gas Inlet	1" Sch 10S					

REVISIONS

REV.	DATE	DESCRIPTION
0	10/21/2015	FOR APPROV

ABC Fabricators Inc.
2600 Washington Blvd.
Dallas, TX, 75204

DWN BY:
CHK BY:
DATE:

General Arrangeme

DWG NO 145685-1 Rev 0

Pressure Vessel CW6

Deficiencies Summary

No deficiencies found.

Nozzle Schedule

Nozzle mark	Service	Size	Materials								
			Nozzle	Impact	Norm	Fine Grain	Pad	Impact	Norm	Fine Grain	Flange
N1	Gas Outlet	1" Sch 10S	SA-312 TP304 Wld & smls pipe	No	No	No	N/A	N/A	N/A	N/A	N/A
N2	Gas Inlet	1" Sch 10S	SA-312 TP304 Wld & smls pipe	No	No	No	N/A	N/A	N/A	N/A	N/A
N3	Thermocouple	0.500" Class 3000 - threaded	SA-312 TP304 Wld & smls pipe	No	No	No	N/A	N/A	N/A	N/A	N/A
N4	Copy of Thermocouple	0.500" Class 3000 - threaded	SA-312 TP304 Wld & smls pipe	No	No	No	N/A	N/A	N/A	N/A	N/A
N5	Copy of Thermocouple	0.500" Class 3000 - threaded	SA-312 TP304 Wld & smls pipe	No	No	No	N/A	N/A	N/A	N/A	N/A
N6	Copy of Thermocouple	0.500" Class 3000 - threaded	SA-312 TP304 Wld & smls pipe	No	No	No	N/A	N/A	N/A	N/A	N/A
N7	Copy of Thermocouple	0.500" Class 3000 - threaded	SA-312 TP304 Wld & smls pipe	No	No	No	N/A	N/A	N/A	N/A	N/A
N8	Fill Nozzle	3" Sch 10S	SA-312 TP304 Wld & smls pipe	No	No	No	N/A	N/A	N/A	N/A	N/A

Nozzle Summary

Nozzle mark	OD (in)	t_n (in)	Req t_n (in)	A_1?	A_2?	Shell			Reinforcement Pad		Corr (in)	A_a/A_r (%)
						Nom t (in)	Design t (in)	User t (in)	Width (in)	t_{pad} (in)		
N1	1.315	0.109	0.1089	Yes	Yes	0.1875*	0.0858		N/A	N/A	0	156.6
N2	1.315	0.109	0.1089	Yes	Yes	0.1875*	0.0858		N/A	N/A	0	160.3
N3	1.125	0.1425	0.0714	Yes	Yes	0.18	0.119		N/A	N/A	0	100.0
N4	1.125	0.1425	0.0714	Yes	Yes	0.18	0.119		N/A	N/A	0	100.0
N5	1.125	0.1425	0.0714	Yes	Yes	0.18	0.119		N/A	N/A	0	100.0
N6	1.125	0.1425	0.0714	Yes	Yes	0.18	0.119		N/A	N/A	0	100.0
N7	1.125	0.1425	0.0714	Yes	Yes	0.18	0.119		N/A	N/A	0	100.0
N8	3.5	0.12	0.1031	Yes	Yes	0.1875*	0.0902		N/A	N/A	0	100.0

t_n: Nozzle thickness
Req t_n: Nozzle thickness required per UG-45/UG-16
Nom t: Vessel wall thickness
Design t: Required vessel wall thickness due to pressure + corrosion allowance per UG-37
User t: Local vessel wall thickness (near opening)
A_a: Area available per UG-37, governing condition
A_r: Area required per UG-37, governing condition
Corr: Corrosion allowance on nozzle wall
* Head minimum thickness after forming

Pressure Summary for Chamber bounded by Ellipsoidal Head #1 and Ellipsoidal Head #2

Identifier	P Design (psi)	T Design (°F)	MAWP (psi)	MAP (psi)	MDMT (°F)	MDMT Exemption	Impact Tested
Ellipsoidal Head #2	165	932	304.16	422.45	-320	Note 1	No
Straight Flange on Ellipsoidal Head #2	165	932	262.77	364.96	-320	Note 2	No
Cylinder #1	165	932	252.42	350.58	-320	Note 2	No
Straight Flange on Ellipsoidal Head #1	165	932	262.77	364.96	-320	Note 2	No
Ellipsoidal Head #1	165	932	304.16	422.45	-320	Note 1	No
Clip #1	165	932	165	N/A	N/A	N/A	N/A
Clip #2	165	932	165	N/A	N/A	N/A	N/A
Clip #3	165	932	165	N/A	N/A	N/A	N/A
Gas Outlet (N1)	165	932	221.3	307.35	-320	Note 3	No
Gas Inlet (N2)	165	932	221.3	307.35	-320	Note 3	No
Thermocouple (N3)	165	932	273.56	379.94	-320	Note 4	No
Copy of Thermocouple (N4)	165	932	273.56	379.94	-320	Note 4	No
Copy of Thermocouple (N5)	165	932	273.56	379.94	-320	Note 4	No
Copy of Thermocouple (N6)	165	932	273.56	379.94	-320	Note 4	No
Copy of Thermocouple (N7)	165	932	273.56	379.94	-320	Note 4	No
Fill Nozzle (N8)	165	932	209.27	290.63	-320	Note 5	No

Chamber design MDMT is -320 °F
Chamber rated MDMT is -320 °F @ 165 psi
Chamber MAWP was used in the MDMT determination

Chamber MAWP hot & corroded is 165 psi @ 932 °F

Chamber MAP cold & new is 290.63 psi @ 70 °F

This pressure chamber is not designed for external pressure.

Notes for MDMT Rating:

Note #	Exemption	Details
1.	Material Impact test exempt per UHA-51(g)(coincident ratio = 0.31189)	
2.	Rated MDMT per UHA-51(d)(1)(a) = -320 °F	
3.	Impact test exempt per UHA-51(g)(coincident ratio = 0.04768)	
4.	Impact test exempt per UHA-51(g)(coincident ratio = 0.02793)	
5.	Impact test exempt per UHA-51(g)(coincident ratio = 0.12871)	

Design notes are available on the Settings Summary page.

Revision History

No.	Date	Operator	Notes
0	10/21/2009	ahanson	New vessel created ASME Section VIII Division 1 [Build 6263]

Settings Summary

COMPRESS Build 6263

Units: U.S. Customary

Datum Line Location: 0.00" from bottom seam

Design

ASME Section VIII Division 1, 2007 Edition, A08 Addenda

Design or Rating:	Get Thickness from Pressure
Minimum thickness:	0.0625" per UG-16(b)
Design for cold shut down only:	No
Design for lethal service (full radiography required):	No
Design nozzles for:	Design P, find nozzle MAWP and MAP
Corrosion weight loss:	100% of theoretical loss
UG-23 Stress Increase:	1.20
Skirt/legs stress increase:	1.0
Minimum nozzle projection:	0.25"
Juncture calculations for $\alpha > 30$ only:	Yes
Preheat P-No 1 Materials > 1.25&#34 and <= 1.50" thick:	No
UG-37(a) shell tr calculation considers longitudinal stress:	No

Butt welds are tapered per Figure UCS-66.3(a).

Hydro/Pneumatic Test

Shop Pneumatic Test Pressure:	1.1 times design P
Test liquid specific gravity:	1.00
Maximum stress during test:	90% of yield

Required Marking - UG-116

UG-116 (e) Radiography:	None
UG-116 (f) Postweld heat treatment:	None

Code Cases\Interpretations

Use Code Case 2547:	No
Apply interpretation VIII-1-83-66:	Yes
Apply interpretation VIII-1-86-175:	Yes
Apply interpretation VIII-1-83-115:	Yes
Apply interpretation VIII-1-01-37:	Yes
No UCS-66.1 MDMT reduction:	No
No UCS-68(c) MDMT reduction:	No
Disallow UG-20(f) exemptions:	Yes

UG-22 Loadings

UG-22 (a) Internal or External Design Pressure :	Yes
UG-22 (b) Weight of the vessel and normal contents under operating or test conditions:	No
UG-22 (c) Superimposed static reactions from weight of attached equipment (external loads):	No
UG-22 (d)(2) Vessel supports such as lugs, rings, skirts, saddles and legs:	No
UG-22 (f) Wind reactions:	No
UG-22 (f) Seismic reactions:	No

Note: UG-22 (b),(c) and (f) loads only considered when supports are present.

Thickness Summary

Component Identifier	Material	Diameter (in)	Length (in)	Nominal t (in)	Design t (in)	Total Corrosion (in)	Joint E	Load
Ellipsoidal Head #2	SA-312 TP304 Wld & smls pipe	12.39 ID	3.285	0.1875*	0.1016	0	0.70	Internal
Straight Flange on Ellipsoidal Head #2	SA-312 TP304 Wld & smls pipe	12.39 ID	1.5	0.1875	0.1025	0	0.70	Internal
Cylinder #1	SA-312 TP304 Wld & smls pipe	12.39 ID	39.5	0.18	0.1025	0	0.70	Internal
Straight Flange on Ellipsoidal Head #1	SA-312 TP304 Wld & smls pipe	12.39 ID	1.5	0.1875	0.1025	0	0.70	Internal
Ellipsoidal Head #1	SA-312 TP304 Wld & smls pipe	12.39 ID	3.285	0.1875*	0.1016	0	0.70	Internal

Nominal t: Vessel wall nominal thickness

Design t: Required vessel thickness due to governing loading + corrosion

Joint E: Longitudinal seam joint efficiency

* Head minimum thickness after forming

Load

internal: Circumferential stress due to internal pressure governs

external: External pressure governs

Wind: Combined longitudinal stress of pressure + weight + wind governs

Seismic: Combined longitudinal stress of pressure + weight + seismic governs

Weight Summary

Component	Weight (lb) Contributed by Vessel Elements							Surface Area ft²
	Metal New*	Metal Corroded*	Insulation & Supports	Lining	Piping + Liquid	Operating Liquid	Test Liquid	
Ellipsoidal Head #2	12.6	12.6	0	0	0	0	17.3	2
Cylinder #1	81.2	81.2	0	0	0	0	171.9	11
Ellipsoidal Head #1	13.1	13.1	0	0	0	0	15.5	2
TOTAL:	**106.9**	**106.9**	**0**	**0**	**0**	**0**	**204.8**	**14**

* Shells with attached nozzles have weight reduced by material cut out for opening.

Component	Weight (lb) Contributed by Attachments									Surface Area ft²
	Body Flanges		Nozzles & Flanges		Packed Beds	Ladders & Platforms	Trays & Supports	Rings & Clips	Vertical Loads	
	New	Corroded	New	Corroded						
Ellipsoidal Head #2	0	0	2.7	2.7	0	0	0	0	0	0
Cylinder #1	0	0	0.3	0.3	0	0	0	0.4	0	0
Ellipsoidal Head #1	0	0	0.1	0.1	0	0	0	0	0	0
TOTAL:	**0**	**0**	**3.2**	**3.2**	**0**	**0**	**0**	**0.4**	**0**	**1**

Vessel operating weight, Corroded: 111 lb
Vessel operating weight, New: 111 lb
Vessel empty weight, Corroded: 111 lb
Vessel empty weight, New: 111 lb
Vessel test weight, New: 315 lb
Vessel surface area: 15 ft²

Vessel center of gravity location - from datum - lift condition

Vessel Lift Weight, New: 111 lb
Center of Gravity: 20.3248"

Vessel Capacity

Vessel Capacity** (New): 24 US gal
Vessel Capacity** (Corroded): 24 US gal
**The vessel capacity does not include volume of nozzle, piping or other attachments.

Shop test pressure determination for Chamber bounded by Ellipsoidal Head #1 and Ellipsoidal Head #2 based on design P per UG-100(b)

Shop pneumatic test gauge pressure is 252.085 psi at 70 °F (the chamber design P = 165 psi)

The shop test is performed with the vessel in the vertical position.

Identifier	Local test pressure psi	Test liquid static head psi	UG-100 stress ratio	UG-100 pressure factor
Ellipsoidal Head #2 (1)	252.446	0.361	1.3889	1.10
Straight Flange on Ellipsoidal Head #2	252.446	0.361	1.3889	1.10
Cylinder #1	253.872	1.787	1.3889	1.10
Straight Flange on Ellipsoidal Head #1	253.926	1.841	1.3889	1.10
Ellipsoidal Head #1	254.038	1.953	1.3889	1.10
Copy of Thermocouple (N4)	252.782	0.697	1.3889	1.10
Copy of Thermocouple (N5)	253.103	1.017	1.3889	1.10
Copy of Thermocouple (N6)	253.423	1.338	1.3889	1.10
Copy of Thermocouple (N7)	253.744	1.658	1.3889	1.10
Fill Nozzle (N8)	252.295	0.209	1.3889	1.10
Gas Inlet (N2)	252.275	0.19	1.3889	1.10
Gas Outlet (N1)	254.08	1.995	1.3889	1.10
Thermocouple (N3)	252.534	0.448	1.3889	1.10

Notes:
(1) Ellipsoidal Head #2 limits the UG-100 stress ratio.

The field test condition has not been investigated for the Chamber bounded by Ellipsoidal Head #1 and Ellipsoidal Head #2.

Cylinder #1

ASME Section VIII Division 1, 2007 Edition, A08 Addenda

Component:	Cylinder
Material specification:	SA-312 TP304 Wld & smls pipe (II-D p. 90, ln. 15)
Pipe NPS and Schedule:	12" Sch 10S
Rated MDMT per UHA-51(d)(1)(a) = -320 °F	

Internal design pressure: P = 165 psi @ 932 °F

Static liquid head:

P_{tv} = 1.79 psi (SG = 1, H_s = 49.5", Vertical test head)

Corrosion allowance Inner C = 0" Outer C = 0"

Design MDMT = -320 °F
Rated MDMT = -320 °F

No impact test performed
Material is not normalized
Material is not produced to Fine Grain Practice
PWHT is not performed

Radiography:		
	Longitudinal joint -	None UW-11(c) Type 1
	Top circumferential joint -	None UW-11(c) Type 2
	Bottom circumferential joint -	None UW-11(c) Type 1

Estimated weight	New = 81.4 lb	corr = 81.4 lb
Capacity	New = 20.62 US gal	corr = 20.62 US gal

ID = 12.39"
Length L_c = 39.5"
t = 0.18"

Design thickness, (at 932 °F) UG-27(c)(1)

t = P*R / (S*E - 0.60*P) + Corrosion
= 165*6.195 / (14,400*0.70 - 0.60*165) + 0
= 0.1025"

Maximum allowable working pressure, (at 932 °F) UG-27(c)(1)

P = S*E*t / (R + 0.60*t) - P_s
= 14,400*0.70*0.1575 / (6.195 + 0.60*0.1575) - 0
= 252.42 psi

Maximum allowable pressure, (at 70 °F) UG-27(c)(1)

P = S*E*t / (R + 0.60*t)
= 20,000*0.70*0.1575 / (6.195 + 0.60*0.1575)
= 350.58 psi

Ellipsoidal Head #2

ASME Section VIII, Division 1, 2007 Edition, A08 Addenda

Component: Ellipsoidal Head
Material Specification: SA-312 TP304 Wld & smls pipe (II-D p.90, ln. 15)
Material Impact test exempt per UHA-51(g)(coincident ratio = 0.31189)

Internal design pressure: P = 165 psi @ 932 °F

Static liquid head:

P_s= 0 psi (SG=1, H_s=0" Operating head)
P_{tv}= 0.3068 psi (SG=1, H_s=8.5" Vertical test head)

Corrosion allowance: Inner C = 0" Outer C = 0"

Design MDMT = -320°F
Rated MDMT = -320°F

No impact test performed
Material is not normalized
Material is not produced to fine grain practice
PWHT is not performed
Do not Optimize MDMT / Find MAWP

Radiography: Category A joints - None UW-11(c) Type 1
Head to shell seam - None UW-11(c) Type 2

Estimated weight*: new = 12.6 lb corr = 12.6 lb
Capacity*: new = 1.9 US gal corr = 1.9 US gal
* includes straight flange

Inner diameter = 12.39"
Minimum head thickness = 0.1875"
Head ratio D/2h = 2 (new)
Head ratio D/2h = 2 (corroded)
Straight flange length L_{sf} = 1.5"
Nominal straight flange thickness t_{sf} = 0.1875"

Results Summary

The governing condition is internal pressure.
Minimum thickness per UG-16 = 0.0625" + 0" = 0.0625"
Design thickness due to internal pressure (t) = 0.1016"
Maximum allowable working pressure (MAWP) = 304.16 psi
Maximum allowable pressure (MAP) = 422.45 psi

Design thickness for internal pressure, (Corroded at 932 °F) UG-32(d)(1)

t = P*D/(2*S*E - 0.2*P) + Corrosion
= 165*12.39/(2*14,400*0.7 - 0.2*165) + 0
= 0.1016"

The head internal pressure design thickness is 0.1016".

Maximum allowable working pressure, (Corroded at 932 °F) UG-32(d)(1)

$$P = 2*S*E*t/(D + 0.2*t) - P_s$$
$$= 2*14,400*0.7*0.1875/(12.39 + 0.2*0.1875) - 0$$
$$= 304.16 \text{ psi}$$

The maximum allowable working pressure (MAWP) is 304.16 psi.

Maximum allowable pressure, (New at 70 °F) UG-32(d)(1)

$$P = 2*S*E*t/(D + 0.2*t) - P_s$$
$$= 2*20,000*0.7*0.1875/(12.39 + 0.2*0.1875) - 0$$
$$= 422.45 \text{ psi}$$

The maximum allowable pressure (MAP) is 422.45 psi.

% Forming strain - UHA-44(a)(2)(b)

$$EFE = (75*t / R_f)*(1 - R_f / R_o)$$
$$= (75*0.1875 / 2.2001)*(1 - 2.2001 / \infty)$$
$$= 6.3919\%$$

Straight Flange on Ellipsoidal Head #2

ASME Section VIII Division 1, 2007 Edition, A08 Addenda

Component:	Straight Flange
Material specification:	SA-312 TP304 Wld & smls pipe (II-D p. 90, ln. 15)
Rated MDMT per UHA-51(d)(1)(a) = -320 °F	

Internal design pressure: P = 165 psi @ 932 °F

Static liquid head:

P_{tv} = 0.36 psi (SG = 1, H_s = 10", Vertical test head)

Corrosion allowance Inner C = 0" Outer C = 0"

Design MDMT = -320 °F
Rated MDMT = -320 °F

No impact test performed
Material is not normalized
Material is not produced to Fine Grain Practice
PWHT is not performed

Radiography: Longitudinal joint - None UW-11(c) Type 1
Circumferential joint - None UW-11(c) Type 2

Estimated weight New = 3.2 lb corr = 3.2 lb
Capacity New = 0.78 US gal corr = 0.78 US gal

ID = 12.39"
Length L_c = 1.5"
t = 0.1875"

Design thickness, (at 932 °F) UG-27(c)(1)

t = P*R / (S*E - 0.60*P) + Corrosion
= 165*6.195 / (14,400*0.70 - 0.60*165) + 0
= 0.1025"

Maximum allowable working pressure, (at 932 °F) UG-27(c)(1)

P = S*E*t / (R + 0.60*t) - P_s
= 14,400*0.70*0.1641 / (6.195 + 0.60*0.1641) - 0
= 262.77 psi

Maximum allowable pressure, (at 70 °F) UG-27(c)(1)

P = S*E*t / (R + 0.60*t)
= 20,000*0.70*0.1641 / (6.195 + 0.60*0.1641)
= 364.96 psi

Straight Flange on Ellipsoidal Head #1

ASME Section VIII Division 1, 2007 Edition, A08 Addenda

Component: Straight Flange
Material specification: SA-312 TP304 Wld & smls pipe (II-D p. 90, ln. 15)
Rated MDMT per UHA-51(d)(1)(a) = -320 °F

Internal design pressure: P = 165 psi @ 932 °F

Static liquid head:

P_{tv} = 1.84 psi (SG = 1, H_s = 51", Vertical test head)

Corrosion allowance Inner C = 0" Outer C = 0"

Design MDMT = -320 °F
Rated MDMT = -320 °F

No impact test performed
Material is not normalized
Material is not produced to Fine Grain Practice
PWHT is not performed

Radiography: Longitudinal joint - None UW-11(c) Type 1
Circumferential joint - None UW-11(c) Type 1

Estimated weight New = 3.2 lb corr = 3.2 lb
Capacity New = 0.78 US gal corr = 0.78 US gal

ID = 12.39"
Length L_c = 1.5"
t = 0.1875"

Design thickness, (at 932 °F) UG-27(c)(1)

t = P*R / (S*E - 0.60*P) + Corrosion
= 165*6.195 / (14,400*0.70 - 0.60*165) + 0
= 0.1025"

Maximum allowable working pressure, (at 932 °F) UG-27(c)(1)

P = S*E*t / (R + 0.60*t) - P_s
= 14,400*0.70*0.1641 / (6.195 + 0.60*0.1641) - 0
= 262.77 psi

Maximum allowable pressure, (at 70 °F) UG-27(c)(1)

P = S*E*t / (R + 0.60*t)
= 20,000*0.70*0.1641 / (6.195 + 0.60*0.1641)
= 364.96 psi

Ellipsoidal Head #1

ASME Section VIII, Division 1, 2007 Edition, A08 Addenda

Component:	Ellipsoidal Head
Material Specification:	SA-312 TP304 Wld & smls pipe (II-D p.90, ln. 15)

Material Impact test exempt per UHA-51(g)(coincident ratio = 0.31189)

Internal design pressure: P = 165 psi @ 932 °F

Static liquid head:

P_s= 0 psi (SG=1, H_s=0" Operating head)
P_{tv}= 1.9528 psi (SG=1, H_s=54.0975" Vertical test head)

Corrosion allowance: Inner C = 0" Outer C = 0"

Design MDMT = -320 °F
Rated MDMT = -320 °F

No impact test performed
Material is not normalized
Material is not produced to fine grain practice
PWHT is not performed
Do not Optimize MDMT / Find MAWP

Radiography:	Category A joints -	None UW-11(c) Type 1
	Head to shell seam -	None UW-11(c) Type 1

Estimated weight*:	new = 13.1 lb	corr = 13.1 lb
Capacity*:	new = 1.9 US gal	corr = 1.9 US gal

* includes straight flange

Inner diameter	=	12.39"
Minimum head thickness	=	0.1875"
Head ratio D/2h	=	2 (new)
Head ratio D/2h	=	2 (corroded)
Straight flange length L_{sf}	=	1.5"
Nominal straight flange thickness t_{sf}	=	0.1875"

Results Summary

The governing condition is internal pressure.

Minimum thickness per UG-16	=	0.0625" + 0" = 0.0625"
Design thickness due to internal pressure (t)	=	0.1016"
Maximum allowable working pressure (MAWP)	=	304.16 psi
Maximum allowable pressure (MAP)	=	422.45 psi

Design thickness for internal pressure, (Corroded at 932 °F) UG-32(d)(1)

t = P*D/(2*S*E - 0.2*P) + Corrosion
= 165*12.39/(2*14,400*0.7 - 0.2*165) + 0
= 0.1016"

The head internal pressure design thickness is 0.1016".

Maximum allowable working pressure, (Corroded at 932 °F) UG-32(d)(1)

$$P = 2*S*E*t/(D + 0.2*t) - P_s$$
$$= 2*14{,}400*0.7*0.1875/(12.39 + 0.2*0.1875) - 0$$
$$= 304.16 \text{ psi}$$

The maximum allowable working pressure (MAWP) is 304.16 psi.

Maximum allowable pressure, (New at 70 °F) UG-32(d)(1)

$$P = 2*S*E*t/(D + 0.2*t) - P_s$$
$$= 2*20{,}000*0.7*0.1875/(12.39 + 0.2*0.1875) - 0$$
$$= 422.45 \text{ psi}$$

The maximum allowable pressure (MAP) is 422.45 psi.

% Forming strain - UHA-44(a)(2)(b)

$$EFE = (75*t / R_f)*(1 - R_f / R_o)$$
$$= (75*0.1875 / 2.2001)*(1 - 2.2001 / \infty)$$
$$= 6.3919\%$$

ASME Section VIII Division 1, 2007 Edition, A08 Addenda

$t_{w(lower)}$ = 0.18 in
Leg_{41} = 0.1425 in

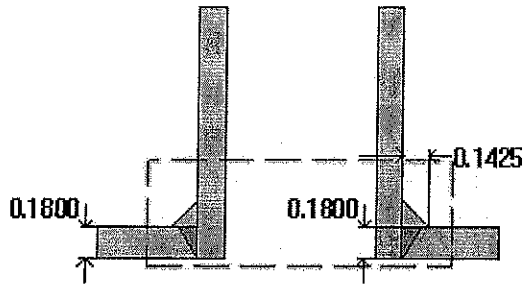

Note: round inside edges per UG-76(c)

Located on:	Cylinder #1
Liquid static head included:	0 psi
Nozzle material specification:	SA-312 TP304 Wld & smls pipe (II-D p. 90, ln. 15)
Nozzle longitudinal joint efficiency:	1
Nozzle description:	0.500" Class 3000 - threaded
Nozzle orientation:	150°
Local vessel minimum thickness:	0.1575 in
Nozzle center line offset to datum line:	30.62 in
End of nozzle to shell center:	6.625 in
Nozzle inside diameter, new:	0.84 in
Nozzle nominal wall thickness:	0.1425 in
Nozzle corrosion allowance:	0 in
Projection available outside vessel, Lpr:	0.25 in

This nozzle passes through a Category A joint.

Reinforcement Calculations for Internal Pressure

Available reinforcement per UG-37 governs the MAWP of this nozzle.

UG-37 Area Calculation Summary (in^2) For P = 273.56 psi @ 932 °F The opening is adequately reinforced							UG-45 Nozzle Wall Thickness Summary (in) The nozzle passes UG-45	
A required	A available	A_1	A_2	A_3	A_5	A welds	t_{req}	t_{min}
0.1	0.1	0.0125	0.0672	--	--	0.0203	0.0625	0.1247

UG-41 Weld Failure Path Analysis Summary
The nozzle is exempt from weld strength calculations per UW-15(b)(1)

UW-16 Weld Sizing Summary			
Weld description	Required weld throat size (in)	Actual weld throat size (in)	Status
Nozzle to shell fillet (Leg_{41})	0.0997	0.0997	weld size is adequate

Calculations for internal pressure 273.56 psi @ 932 °F

Nozzle Impact test exempt per UHA-51(g)(coincident ratio = 0.02793).

Parallel Limits of reinforcement per UG-40

$$L_R = MAX(d, R_n + (t_n - C_n) + (t - C))$$
$$= MAX(0.84, 0.42 + (0.1425 - 0) + (0.1575 - 0))$$
$$= 0.84 \text{ in}$$

Outer Normal Limits of reinforcement per UG-40

$$L_H = MIN(2.5*(t - C), 2.5*(t_n - C_n) + t_e)$$
$$= MIN(2.5*(0.1575 - 0), 2.5*(0.1425 - 0) + 0)$$
$$= 0.3563 \text{ in}$$

Nozzle required thickness per UG-27(c)(1)

$$t_{rn} = P*R_n/(S_n*E - 0.6*P)$$
$$= 273.557*0.42/(14,400*1 - 0.6*273.557)$$
$$= 0.0081 \text{ in}$$

Required thickness t_r from UG-37(a)

t_r = P*R/(S*E - 0.6*P)
= 273.557*6.195/(14,400*1 - 0.6*273.557)
= 0.119 in

Area required per UG-37(c)

Allowable stresses: S_n = 14,400, S_v = 14,400 psi

f_{r1} = lesser of 1 or S_n/S_v = 1
f_{r2} = lesser of 1 or S_n/S_v = 1

A = $d*t_r*F + 2*t_n*t_r*F*(1 - f_{r1})$
= 0.84*0.119*1 + 2*0.1425*0.119*1*(1 - 1)
= <u>0.1</u> in^2

Area available from FIG. UG-37.1

A_1 = larger of the following= <u>0.0125</u> in^2

= $d*(E_1*t - F*t_r) - 2*t_n*(E_1*t - F*t_r)*(1 - f_{r1})$
= 0.84*(0.85*0.1575 - 1*0.119) - 2*0.1425*(0.85*0.1575 - 1*0.119)*(1 - 1)
= 0.0125 in^2

= $2*(t + t_n)*(E_1*t - F*t_r) - 2*t_n*(E_1*t - F*t_r)*(1 - f_{r1})$
= 2*(0.1575 + 0.1425)*(0.85*0.1575 - 1*0.119) - 2*0.1425*(0.85*0.1575 - 1*0.119)*(1 - 1)
= 0.0089 in^2

A_2 = smaller of the following= <u>0.0672</u> in^2

= $2*(t_n - t_{rn})*f_{r2}*L_{pr}$
= 2*(0.1425 - 0.0081)*1*0.25
= 0.0672 in^2

= $2*(t_n - t_{rn})*f_{r2}*L_{pr}$
= 2*(0.1425 - 0.0081)*1*0.25
= 0.0672 in^2

A_{41} = Leg^2*f_{r2}
= 0.1425^2*1
= <u>0.0203</u> in^2

Area = $A_1 + A_2 + A_{41}$
= 0.0125 + 0.0672 + 0.0203
= <u>0.1</u> in^2

As Area >= A the reinforcement is adequate.

UW-16(c) Weld Check

Fillet weld: t_{min} = lesser of 0.75 or t_n or t = 0.1425 in
$t_{c(min)}$ = lesser of 0.25 or 0.7*t_{min} = 0.0997 in
$t_{c(actual)}$ = 0.7*Leg = 0.7*0.1425 = 0.0998 in

The fillet weld size is satisfactory.

Weld strength calculations are not required for this detail which conforms to Fig. UW-16.1, sketch (c-e).

ASME B16.11 Coupling Wall Thickness Check

Wall thickness req'd per ASME B16.11 2.1.1: t_{r1} = 0.0106 in (E =1)
Wall thickness per UG-16(b): t_{r3} = 0.0625 in

Available nozzle wall thickness new, t_n = 0.875*0.1425 = 0.1247 in

The nozzle neck thickness is adequate.

Reinforcement Calculations for MAP

Available reinforcement per UG-37 governs the MAP of this nozzle.

UG-37 Area Calculation Summary (in²) For P = 379.94 psi @ 70 °F The opening is adequately reinforced							UG-45 Nozzle Wall Thickness Summary (in) The nozzle passes UG-45	
A required	A available	A_1	A_2	A_3	A_5	A welds	t_{req}	t_{min}
0.1	0.1	0.0125	0.0672	--	--	0.0203	0.0625	0.1247

UG-41 Weld Failure Path Analysis Summary
The nozzle is exempt from weld strength calculations per UW-15(b)(1)

UW-16 Weld Sizing Summary			
Weld description	Required weld throat size (in)	Actual weld throat size (in)	Status
Nozzle to shell fillet (Leg_{41})	0.0997	0.0997	weld size is adequate

Calculations for internal pressure 379.94 psi @ 70 °F

Nozzle Impact test exempt per UHA-51(g)(coincident ratio = 0.02793).

Parallel Limits of reinforcement per UG-40

L_R = MAX(d, R_n + (t_n - C_n) + (t - C))
= MAX(0.84, 0.42 + (0.1425 - 0) + (0.1575 - 0))
= 0.84 in

Outer Normal Limits of reinforcement per UG-40

L_H = MIN(2.5*(t - C), 2.5*(t_n - C_n) + t_e)
= MIN(2.5*(0.1575 - 0), 2.5*(0.1425 - 0) + 0)
= 0.3563 in

Nozzle required thickness per UG-27(c)(1)

t_{rn} = P*R_n/(S_n*E - 0.6*P)
= 379.938*0.42/(20,000*1 - 0.6*379.938)
= 0.0081 in

Required thickness t_r from UG-37(a)

t_r = P*R/(S*E - 0.6*P)
= 379.938*6.195/(20,000*1 - 0.6*379.938)
= 0.119 in

Area required per UG-37(c)

Allowable stresses: S_n = 20,000, S_v = 20,000 psi

f_{r1} = lesser of 1 or S_n/S_v = 1
f_{r2} = lesser of 1 or S_n/S_v = 1

A = $d*t_r*F + 2*t_n*t_r*F*(1 - f_{r1})$
= 0.84*0.119*1 + 2*0.1425*0.119*1*(1 - 1)
= 0.1 in^2

Area available from FIG. UG-37.1

A_1 = larger of the following= 0.0125 in^2

= $d*(E_1*t - F*t_r) - 2*t_n*(E_1*t - F*t_r)*(1 - f_{r1})$
= 0.84*(0.85*0.1575 - 1*0.119) - 2*0.1425*(0.85*0.1575 - 1*0.119)*(1 - 1)
= 0.0125 in^2

= $2*(t + t_n)*(E_1*t - F*t_r) - 2*t_n*(E_1*t - F*t_r)*(1 - f_{r1})$
= 2*(0.1575 + 0.1425)*(0.85*0.1575 - 1*0.119) - 2*0.1425*(0.85*0.1575 - 1*0.119)*(1 - 1)
= 0.0089 in^2

A_2 = smaller of the following= 0.0672 in^2

= $2*(t_n - t_{rn})*f_{r2}*L_{pr}$
= 2*(0.1425 - 0.0081)*1*0.25
= 0.0672 in^2

= $2*(t_n - t_{rn})*f_{r2}*L_{pr}$
= 2*(0.1425 - 0.0081)*1*0.25
= 0.0672 in^2

A_{41} = Leg^2*f_{r2}
= 0.1425^2*1
= 0.0203 in^2

Area = $A_1 + A_2 + A_{41}$
= 0.0125 + 0.0672 + 0.0203
= 0.1 in^2

As Area >= A the reinforcement is adequate.

UW-16(c) Weld Check

Fillet weld: t_{min} = lesser of 0.75 or t_n or t = 0.1425 in
$t_{c(min)}$ = lesser of 0.25 or 0.7*t_{min} = 0.0997 in
$t_{c(actual)}$ = 0.7*Leg = 0.7*0.1425 = 0.0998 in

The fillet weld size is satisfactory.

Weld strength calculations are not required for this detail which conforms to Fig. UW-16.1, sketch (c-e).

ASME B16.11 Coupling Wall Thickness Check

Wall thickness req'd per ASME B16.11 2.1.1: t_{r1} = 0.0106 in (E =1)
Wall thickness per UG-16(b): t_{r3} = 0.0625 in

Available nozzle wall thickness new, t_n = 0.875*0.1425 = 0.1247 in

The nozzle neck thickness is adequate.

ASME Section VIII Division 1, 2007 Edition, A08 Addenda

$t_{w(lower)}$ = 0.18 in
Leg_{41} = 0.1425 in

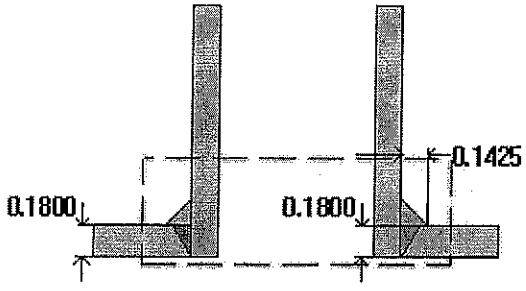

Note: round inside edges per UG-76(c)

Located on:	Cylinder #1
Liquid static head included:	0 psi
Nozzle material specification:	SA-312 TP304 Wld & smls pipe (II-D p. 90, ln. 15)
Nozzle longitudinal joint efficiency:	1
Nozzle description:	0.500" Class 3000 - threaded
Nozzle orientation:	0°
Local vessel minimum thickness:	0.1575 in
Nozzle center line offset to datum line:	21.74 in
End of nozzle to shell center:	6.625 in
Nozzle inside diameter, new:	0.84 in
Nozzle nominal wall thickness:	0.1425 in
Nozzle corrosion allowance:	0 in
Projection available outside vessel, Lpr:	0.25 in

This nozzle passes through a Category A joint.

Reinforcement Calculations for Internal Pressure

Available reinforcement per UG-37 governs the MAWP of this nozzle.

UG-37 Area Calculation Summary (in^2) For P = 273.56 psi @ 932 °F The opening is adequately reinforced							UG-45 Nozzle Wall Thickness Summary (in) The nozzle passes UG-45	
A required	A available	A_1	A_2	A_3	A_5	A welds	t_{req}	t_{min}
0.1	0.1	0.0125	0.0672	--	--	0.0203	0.0625	0.1247

UG-41 Weld Failure Path Analysis Summary
The nozzle is exempt from weld strength calculations per UW-15(b)(1)

UW-16 Weld Sizing Summary			
Weld description	Required weld throat size (in)	Actual weld throat size (in)	Status
Nozzle to shell fillet (Leg_{41})	0.0997	0.0997	weld size is adequate

Calculations for internal pressure 273.56 psi @ 932 °F

Nozzle Impact test exempt per UHA-51(g)(coincident ratio = 0.02793).

Parallel Limits of reinforcement per UG-40

$$L_R = MAX(d, R_n + (t_n - C_n) + (t - C))$$
$$= MAX(0.84, 0.42 + (0.1425 - 0) + (0.1575 - 0))$$
$$= 0.84 \text{ in}$$

Outer Normal Limits of reinforcement per UG-40

$$L_H = MIN(2.5*(t - C), 2.5*(t_n - C_n) + t_e)$$
$$= MIN(2.5*(0.1575 - 0), 2.5*(0.1425 - 0) + 0)$$
$$= 0.3563 \text{ in}$$

Nozzle required thickness per UG-27(c)(1)

$$t_{rn} = P*R_n/(S_n*E - 0.6*P)$$
$$= 273.557*0.42/(14{,}400*1 - 0.6*273.557)$$
$$= 0.0081 \text{ in}$$

Required thickness t_r from UG-37(a)

t_r = P*R/(S*E - 0.6*P)
= 273.557*6.195/(14,400*1 - 0.6*273.557)
= 0.119 in

Area required per UG-37(c)

Allowable stresses: S_n = 14,400, S_v = 14,400 psi

f_{r1} = lesser of 1 or S_n/S_v = 1
f_{r2} = lesser of 1 or S_n/S_v = 1

A = $d*t_r*F + 2*t_n*t_r*F*(1 - f_{r1})$
= 0.84*0.119*1 + 2*0.1425*0.119*1*(1 - 1)
= <u>0.1</u> in^2

Area available from FIG. UG-37.1

A_1 = larger of the following= <u>0.0125</u> in^2

= $d*(E_1*t - F*t_r) - 2*t_n*(E_1*t - F*t_r)*(1 - f_{r1})$
= 0.84*(0.85*0.1575 - 1*0.119) - 2*0.1425*(0.85*0.1575 - 1*0.119)*(1 - 1)
= 0.0125 in^2

= $2*(t + t_n)*(E_1*t - F*t_r) - 2*t_n*(E_1*t - F*t_r)*(1 - f_{r1})$
= 2*(0.1575 + 0.1425)*(0.85*0.1575 - 1*0.119) - 2*0.1425*(0.85*0.1575 - 1*0.119)*(1 - 1)
= 0.0089 in^2

A_2 = smaller of the following= <u>0.0672</u> in^2

= $2*(t_n - t_{rn})*f_{r2}*L_{pr}$
= 2*(0.1425 - 0.0081)*1*0.25
= 0.0672 in^2

= $2*(t_n - t_{rn})*f_{r2}*L_{pr}$
= 2*(0.1425 - 0.0081)*1*0.25
= 0.0672 in^2

A_{41} = Leg^2*f_{r2}
= 0.1425^2*1
= <u>0.0203</u> in^2

Area = $A_1 + A_2 + A_{41}$
= 0.0125 + 0.0672 + 0.0203
= <u>0.1</u> in^2

As Area >= A the reinforcement is adequate.

UW-16(c) Weld Check

Fillet weld: t_{min} = lesser of 0.75 or t_n or t = 0.1425 in
$t_{c(min)}$ = lesser of 0.25 or 0.7*t_{min} = <u>0.0997</u> in
$t_{c(actual)}$ = 0.7*Leg = 0.7*0.1425 = 0.0998 in

The fillet weld size is satisfactory.

Weld strength calculations are not required for this detail which conforms to Fig. UW-16.1, sketch (c-e).

ASME B16.11 Coupling Wall Thickness Check

Wall thickness req'd per ASME B16.11 2.1.1: t_{r1} = 0.0106 in (E =1)
Wall thickness per UG-16(b): t_{r3} = <u>0.0625</u> in

Available nozzle wall thickness new, t_n = 0.875*0.1425 = 0.1247 in

The nozzle neck thickness is adequate.

Reinforcement Calculations for MAP

Available reinforcement per UG-37 governs the MAP of this nozzle.

UG-37 Area Calculation Summary (in²) For P = 379.94 psi @ 70 °F The opening is adequately reinforced							UG-45 Nozzle Wall Thickness Summary (in) The nozzle passes UG-45	
A required	A available	A_1	A_2	A_3	A_5	A welds	t_{req}	t_{min}
0.1	0.1	0.0125	0.0672	--	--	0.0203	0.0625	0.1247

UG-41 Weld Failure Path Analysis Summary
The nozzle is exempt from weld strength calculations per UW-15(b)(1)

UW-16 Weld Sizing Summary			
Weld description	Required weld throat size (in)	Actual weld throat size (in)	Status
Nozzle to shell fillet (Leg_{41})	0.0997	0.0997	weld size is adequate

Calculations for internal pressure 379.94 psi @ 70 °F

Nozzle Impact test exempt per UHA-51(g)(coincident ratio = 0.02793).

Parallel Limits of reinforcement per UG-40

L_R = MAX(d, R_n + (t_n - C_n) + (t - C))
= MAX(0.84, 0.42 + (0.1425 - 0) + (0.1575 - 0))
= 0.84 in

Outer Normal Limits of reinforcement per UG-40

L_H = MIN(2.5*(t - C), 2.5*(t_n - C_n) + t_e)
= MIN(2.5*(0.1575 - 0), 2.5*(0.1425 - 0) + 0)
= 0.3563 in

Nozzle required thickness per UG-27(c)(1)

t_{rn} = P*R_n/(S_n*E - 0.6*P)
= 379.938*0.42/(20,000*1 - 0.6*379.938)
= 0.0081 in

Required thickness t_r from UG-37(a)

t_r = P*R/(S*E - 0.6*P)
= 379.938*6.195/(20,000*1 - 0.6*379.938)
= 0.119 in

Area required per UG-37(c)

Allowable stresses: S_n = 20,000, S_v = 20,000 psi

f_{r1} = lesser of 1 or S_n/S_v = 1
f_{r2} = lesser of 1 or S_n/S_v = 1

A = $d*t_r*F + 2*t_n*t_r*F*(1 - f_{r1})$
= 0.84*0.119*1 + 2*0.1425*0.119*1*(1 - 1)
= <u>0.1</u> in^2

Area available from FIG. UG-37.1

A_1 = larger of the following= <u>0.0125</u> in^2

= $d*(E_1*t - F*t_r) - 2*t_n*(E_1*t - F*t_r)*(1 - f_{r1})$
= 0.84*(0.85*0.1575 - 1*0.119) - 2*0.1425*(0.85*0.1575 - 1*0.119)*(1 - 1)
= 0.0125 in^2

= $2*(t + t_n)*(E_1*t - F*t_r) - 2*t_n*(E_1*t - F*t_r)*(1 - f_{r1})$
= 2*(0.1575 + 0.1425)*(0.85*0.1575 - 1*0.119) - 2*0.1425*(0.85*0.1575 - 1*0.119)*(1 - 1)
= 0.0089 in^2

A_2 = smaller of the following= <u>0.0672</u> in^2

= $2*(t_n - t_{rn})*f_{r2}*L_{pr}$
= 2*(0.1425 - 0.0081)*1*0.25
= 0.0672 in^2

= $2*(t_n - t_{rn})*f_{r2}*L_{pr}$
= 2*(0.1425 - 0.0081)*1*0.25
= 0.0672 in^2

A_{41} = Leg^2*f_{r2}
= 0.1425^2*1
= <u>0.0203</u> in^2

Area = $A_1 + A_2 + A_{41}$
= 0.0125 + 0.0672 + 0.0203
= <u>0.1</u> in^2

As Area >= A the reinforcement is adequate.

UW-16(c) Weld Check

Fillet weld: t_{min} = lesser of 0.75 or t_n or t = 0.1425 in
$t_{c(min)}$ = lesser of 0.25 or 0.7*t_{min} = 0.0997 in
$t_{c(actual)}$ = 0.7*Leg = 0.7*0.1425 = 0.0998 in

The fillet weld size is satisfactory.

Weld strength calculations are not required for this detail which conforms to Fig. UW-16.1, sketch (c-e).

ASME B16.11 Coupling Wall Thickness Check

Wall thickness req'd per ASME B16.11 2.1.1: t_{r1} = 0.0106 in (E =1)
Wall thickness per UG-16(b): t_{r3} = 0.0625 in

Available nozzle wall thickness new, t_n = 0.875*0.1425 = 0.1247 in

The nozzle neck thickness is adequate.

ASME Section VIII Division 1, 2007 Edition, A08 Addenda

$t_{w(lower)}$ = 0.18 in
Leg_{41} = 0.1425 in

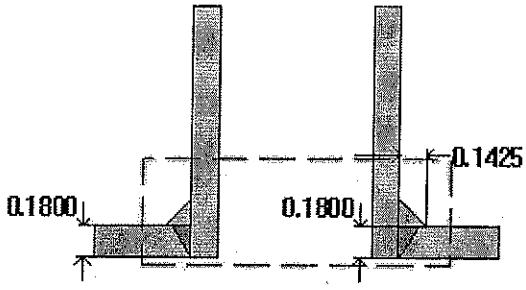

Note: round inside edges per UG-76(c)

Located on:	Cylinder #1
Liquid static head included:	0 psi
Nozzle material specification:	SA-312 TP304 Wld & smls pipe (II-D p. 90, ln. 15)
Nozzle longitudinal joint efficiency:	1
Nozzle description:	0.500" Class 3000 - threaded
Nozzle orientation:	150°
Local vessel minimum thickness:	0.1575 in
Nozzle center line offset to datum line:	12.86 in
End of nozzle to shell center:	6.625 in
Nozzle inside diameter, new:	0.84 in
Nozzle nominal wall thickness:	0.1425 in
Nozzle corrosion allowance:	0 in
Projection available outside vessel, Lpr:	0.25 in

This nozzle passes through a Category A joint.

Reinforcement Calculations for Internal Pressure

Available reinforcement per UG-37 governs the MAWP of this nozzle.

UG-37 Area Calculation Summary (in^2) For P = 273.56 psi @ 932 °F The opening is adequately reinforced							UG-45 Nozzle Wall Thickness Summary (in) The nozzle passes UG-45	
A required	A available	A_1	A_2	A_3	A_5	A welds	t_{req}	t_{min}
0.1	0.1	0.0125	0.0672	--	--	0.0203	0.0625	0.1247

UG-41 Weld Failure Path Analysis Summary
The nozzle is exempt from weld strength calculations per UW-15(b)(1)

UW-16 Weld Sizing Summary			
Weld description	Required weld throat size (in)	Actual weld throat size (in)	Status
Nozzle to shell fillet (Leg_{41})	0.0997	0.0997	weld size is adequate

Calculations for internal pressure 273.56 psi @ 932 °F

Nozzle Impact test exempt per UHA-51(g)(coincident ratio = 0.02793).

Parallel Limits of reinforcement per UG-40

L_R = MAX(d, R_n + (t_n - C_n) + (t - C))
= MAX(0.84, 0.42 + (0.1425 - 0) + (0.1575 - 0))
= 0.84 in

Outer Normal Limits of reinforcement per UG-40

L_H = MIN(2.5*(t - C), 2.5*(t_n - C_n) + t_e)
= MIN(2.5*(0.1575 - 0), 2.5*(0.1425 - 0) + 0)
= 0.3563 in

Nozzle required thickness per UG-27(c)(1)

t_{rn} = P*R_n/(S_n*E - 0.6*P)
= 273.557*0.42/(14,400*1 - 0.6*273.557)
= 0.0081 in

Required thickness t_r from UG-37(a)

t_r = P*R/(S*E - 0.6*P)
= 273.557*6.195/(14,400*1 - 0.6*273.557)
= 0.119 in

Area required per UG-37(c)

Allowable stresses: S_n = 14,400, S_v = 14,400 psi

f_{r1} = lesser of 1 or S_n/S_v = 1
f_{r2} = lesser of 1 or S_n/S_v = 1

A = $d*t_r*F + 2*t_n*t_r*F*(1 - f_{r1})$
= 0.84*0.119*1 + 2*0.1425*0.119*1*(1 - 1)
= <u>0.1</u> in^2

Area available from FIG. UG-37.1

A_1 = larger of the following= <u>0.0125</u> in^2

= $d*(E_1*t - F*t_r) - 2*t_n*(E_1*t - F*t_r)*(1 - f_{r1})$
= 0.84*(0.85*0.1575 - 1*0.119) - 2*0.1425*(0.85*0.1575 - 1*0.119)*(1 - 1)
= 0.0125 in^2

= $2*(t + t_n)*(E_1*t - F*t_r) - 2*t_n*(E_1*t - F*t_r)*(1 - f_{r1})$
= 2*(0.1575 + 0.1425)*(0.85*0.1575 - 1*0.119) - 2*0.1425*(0.85*0.1575 - 1*0.119)*(1 - 1)
= 0.0089 in^2

A_2 = smaller of the following= <u>0.0672</u> in^2

= $2*(t_n - t_{rn})*f_{r2}*L_{pr}$
= 2*(0.1425 - 0.0081)*1*0.25
= 0.0672 in^2

= $2*(t_n - t_{rn})*f_{r2}*L_{pr}$
= 2*(0.1425 - 0.0081)*1*0.25
= 0.0672 in^2

A_{41} = Leg^2*f_{r2}
= 0.1425^2*1
= <u>0.0203</u> in^2

Area = $A_1 + A_2 + A_{41}$
= 0.0125 + 0.0672 + 0.0203
= <u>0.1</u> in^2

As Area >= A the reinforcement is adequate.

UW-16(c) Weld Check

Fillet weld: t_{min} = lesser of 0.75 or t_n or t = 0.1425 in
$t_{c(min)}$ = lesser of 0.25 or 0.7*t_{min} = 0.0997 in
$t_{c(actual)}$ = 0.7*Leg = 0.7*0.1425 = 0.0998 in

The fillet weld size is satisfactory.

Weld strength calculations are not required for this detail which conforms to Fig. UW-16.1, sketch (c-e).

ASME B16.11 Coupling Wall Thickness Check

Wall thickness req'd per ASME B16.11 2.1.1: t_{r1} = 0.0106 in (E =1)
Wall thickness per UG-16(b): t_{r3} = 0.0625 in

Available nozzle wall thickness new, t_n = 0.875*0.1425 = 0.1247 in

The nozzle neck thickness is adequate.

Reinforcement Calculations for MAP

Available reinforcement per UG-37 governs the MAP of this nozzle.

UG-37 Area Calculation Summary (in²) For P = 379.94 psi @ 70 °F The opening is adequately reinforced							UG-45 Nozzle Wall Thickness Summary (in) The nozzle passes UG-45	
A required	A available	A_1	A_2	A_3	A_5	A welds	t_{req}	t_{min}
0.1	0.1	0.0125	0.0672	--	--	0.0203	0.0625	0.1247

UG-41 Weld Failure Path Analysis Summary
The nozzle is exempt from weld strength calculations per UW-15(b)(1)

UW-16 Weld Sizing Summary			
Weld description	Required weld throat size (in)	Actual weld throat size (in)	Status
Nozzle to shell fillet (Leg_{41})	0.0997	0.0997	weld size is adequate

Calculations for internal pressure 379.94 psi @ 70 °F

Nozzle Impact test exempt per UHA-51(g)(coincident ratio = 0.02793).

Parallel Limits of reinforcement per UG-40

L_R = MAX(d, R_n + (t_n - C_n) + (t - C))
= MAX(0.84, 0.42 + (0.1425 - 0) + (0.1575 - 0))
= 0.84 in

Outer Normal Limits of reinforcement per UG-40

L_H = MIN(2.5*(t - C), 2.5*(t_n - C_n) + t_e)
= MIN(2.5*(0.1575 - 0), 2.5*(0.1425 - 0) + 0)
= 0.3563 in

Nozzle required thickness per UG-27(c)(1)

t_{rn} = P*R_n/(S_n*E - 0.6*P)
= 379.938*0.42/(20,000*1 - 0.6*379.938)
= 0.0081 in

Required thickness t_r from UG-37(a)

t_r = P*R/(S*E - 0.6*P)
= 379.938*6.195/(20,000*1 - 0.6*379.938)
= 0.119 in

Area required per UG-37(c)

Allowable stresses: S_n = 20,000, S_v = 20,000 psi

f_{r1} = lesser of 1 or S_n/S_v = 1
f_{r2} = lesser of 1 or S_n/S_v = 1

A = $d*t_r*F + 2*t_n*t_r*F*(1 - f_{r1})$
= 0.84*0.119*1 + 2*0.1425*0.119*1*(1 - 1)
= <u>0.1</u> in^2

Area available from FIG. UG-37.1

A_1 = larger of the following= <u>0.0125</u> in^2

= $d*(E_1*t - F*t_r) - 2*t_n*(E_1*t - F*t_r)*(1 - f_{r1})$
= 0.84*(0.85*0.1575 - 1*0.119) - 2*0.1425*(0.85*0.1575 - 1*0.119)*(1 - 1)
= 0.0125 in^2

= $2*(t + t_n)*(E_1*t - F*t_r) - 2*t_n*(E_1*t - F*t_r)*(1 - f_{r1})$
= 2*(0.1575 + 0.1425)*(0.85*0.1575 - 1*0.119) - 2*0.1425*(0.85*0.1575 - 1*0.119)*(1 - 1)
= 0.0089 in^2

A_2 = smaller of the following= <u>0.0672</u> in^2

= $2*(t_n - t_{rn})*f_{r2}*L_{pr}$
= 2*(0.1425 - 0.0081)*1*0.25
= 0.0672 in^2

= $2*(t_n - t_{rn})*f_{r2}*L_{pr}$
= 2*(0.1425 - 0.0081)*1*0.25
= 0.0672 in^2

A_{41} = Leg^2*f_{r2}
= 0.1425^2*1
= <u>0.0203</u> in^2

Area = $A_1 + A_2 + A_{41}$
= 0.0125 + 0.0672 + 0.0203
= <u>0.1</u> in^2

As Area >= A the reinforcement is adequate.

UW-16(c) Weld Check

Fillet weld: t_{min} = lesser of 0.75 or t_n or t = 0.1425 in
$t_{c(min)}$ = lesser of 0.25 or 0.7*t_{min} = 0.0997 in
$t_{c(actual)}$ = 0.7*Leg = 0.7*0.1425 = 0.0998 in

The fillet weld size is satisfactory.

Weld strength calculations are not required for this detail which conforms to Fig. UW-16.1, sketch (c-e).

ASME B16.11 Coupling Wall Thickness Check

Wall thickness req'd per ASME B16.11 2.1.1: t_{r1} = 0.0106 in (E =1)
Wall thickness per UG-16(b): t_{r3} = 0.0625 in

Available nozzle wall thickness new, t_n = 0.875*0.1425 = 0.1247 in

The nozzle neck thickness is adequate.

ASME Section VIII Division 1, 2007 Edition, A08 Addenda

$t_{w(lower)}$ = 0.18 in
Leg_{41} = 0.1425 in

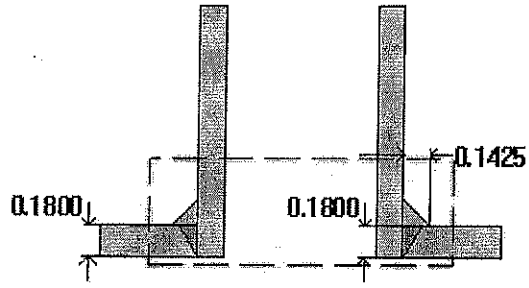

Note: round inside edges per UG-76(c)

Located on:	Cylinder #1
Liquid static head included:	0 psi
Nozzle material specification:	SA-312 TP304 Wld & smls pipe (II-D p. 90, ln. 15)
Nozzle longitudinal joint efficiency:	1
Nozzle description:	0.500" Class 3000 - threaded
Nozzle orientation:	0°
Local vessel minimum thickness:	0.1575 in
Nozzle center line offset to datum line:	3.98 in
End of nozzle to shell center:	6.625 in
Nozzle inside diameter, new:	0.84 in
Nozzle nominal wall thickness:	0.1425 in
Nozzle corrosion allowance:	0 in
Projection available outside vessel, Lpr:	0.25 in

This nozzle passes through a Category A joint.

Reinforcement Calculations for Internal Pressure

Available reinforcement per UG-37 governs the MAWP of this nozzle.

UG-37 Area Calculation Summary (in^2) For P = 273.56 psi @ 932 °F The opening is adequately reinforced							UG-45 Nozzle Wall Thickness Summary (in) The nozzle passes UG-45	
A required	A available	A_1	A_2	A_3	A_5	A welds	t_{req}	t_{min}
0.1	0.1	0.0125	0.0672	--	--	0.0203	0.0625	0.1247

UG-41 Weld Failure Path Analysis Summary
The nozzle is exempt from weld strength calculations per UW-15(b)(1)

UW-16 Weld Sizing Summary			
Weld description	Required weld throat size (in)	Actual weld throat size (in)	Status
Nozzle to shell fillet (Leg_{41})	0.0997	0.0997	weld size is adequate

Calculations for internal pressure 273.56 psi @ 932 °F

Nozzle Impact test exempt per UHA-51(g)(coincident ratio = 0.02793).

Parallel Limits of reinforcement per UG-40

L_R = MAX(d, R_n + (t_n - C_n) + (t - C))
= MAX(0.84, 0.42 + (0.1425 - 0) + (0.1575 - 0))
= 0.84 in

Outer Normal Limits of reinforcement per UG-40

L_H = MIN(2.5*(t - C), 2.5*(t_n - C_n) + t_e)
= MIN(2.5*(0.1575 - 0), 2.5*(0.1425 - 0) + 0)
= 0.3563 in

Nozzle required thickness per UG-27(c)(1)

t_{rn} = P*R_n/(S_n*E - 0.6*P)
= 273.557*0.42/(14,400*1 - 0.6*273.557)
= 0.0081 in

Required thickness t_r from UG-37(a)

t_r = P*R/(S*E - 0.6*P)
= 273.557*6.195/(14,400*1 - 0.6*273.557)
= 0.119 in

Area required per UG-37(c)

Allowable stresses: S_n = 14,400, S_v = 14,400 psi

f_{r1} = lesser of 1 or S_n/S_v = 1
f_{r2} = lesser of 1 or S_n/S_v = 1

A = $d*t_r*F + 2*t_n*t_r*F*(1 - f_{r1})$
= 0.84*0.119*1 + 2*0.1425*0.119*1*(1 - 1)
= <u>0.1</u> in^2

Area available from FIG. UG-37.1

A_1 = larger of the following= <u>0.0125</u> in^2

= $d*(E_1*t - F*t_r) - 2*t_n*(E_1*t - F*t_r)*(1 - f_{r1})$
= 0.84*(0.85*0.1575 - 1*0.119) - 2*0.1425*(0.85*0.1575 - 1*0.119)*(1 - 1)
= 0.0125 in^2

= $2*(t + t_n)*(E_1*t - F*t_r) - 2*t_n*(E_1*t - F*t_r)*(1 - f_{r1})$
= 2*(0.1575 + 0.1425)*(0.85*0.1575 - 1*0.119) - 2*0.1425*(0.85*0.1575 - 1*0.119)*(1 - 1)
= 0.0089 in^2

A_2 = smaller of the following= <u>0.0672</u> in^2

= $2*(t_n - t_{rn})*f_{r2}*L_{pr}$
= 2*(0.1425 - 0.0081)*1*0.25
= 0.0672 in^2

= $2*(t_n - t_{rn})*f_{r2}*L_{pr}$
= 2*(0.1425 - 0.0081)*1*0.25
= 0.0672 in^2

A_{41} = Leg^2*f_{r2}
= 0.1425^2*1
= <u>0.0203</u> in^2

Area = $A_1 + A_2 + A_{41}$
= 0.0125 + 0.0672 + 0.0203
= <u>0.1</u> in^2

As Area >= A the reinforcement is adequate.

UW-16(c) Weld Check

Fillet weld: t_{min} = lesser of 0.75 or t_n or t = 0.1425 in
$t_{c(min)}$ = lesser of 0.25 or 0.7*t_{min} = 0.0997 in
$t_{c(actual)}$ = 0.7*Leg = 0.7*0.1425 = 0.0998 in

The fillet weld size is satisfactory.

Weld strength calculations are not required for this detail which conforms to Fig. UW-16.1, sketch (c-e).

ASME B16.11 Coupling Wall Thickness Check

Wall thickness req'd per ASME B16.11 2.1.1: t_{r1} = 0.0106 in (E =1)
Wall thickness per UG-16(b): t_{r3} = 0.0625 in

Available nozzle wall thickness new, t_n = 0.875*0.1425 = 0.1247 in

The nozzle neck thickness is adequate.

Reinforcement Calculations for MAP

Available reinforcement per UG-37 governs the MAP of this nozzle.

UG-37 Area Calculation Summary (in^2) For P = 379.94 psi @ 70 °F The opening is adequately reinforced							UG-45 Nozzle Wall Thickness Summary (in) The nozzle passes UG-45	
A required	A available	A_1	A_2	A_3	A_5	A welds	t_{req}	t_{min}
0.1	0.1	0.0125	0.0672	--	--	0.0203	0.0625	0.1247

UG-41 Weld Failure Path Analysis Summary
The nozzle is exempt from weld strength calculations per UW-15(b)(1)

UW-16 Weld Sizing Summary			
Weld description	Required weld throat size (in)	Actual weld throat size (in)	Status
Nozzle to shell fillet (Leg_{41})	0.0997	0.0997	weld size is adequate

Calculations for internal pressure 379.94 psi @ 70 °F

Nozzle Impact test exempt per UHA-51(g)(coincident ratio = 0.02793).

Parallel Limits of reinforcement per UG-40

L_R = MAX(d, R_n + (t_n - C_n) + (t - C))
= MAX(0.84, 0.42 + (0.1425 - 0) + (0.1575 - 0))
= 0.84 in

Outer Normal Limits of reinforcement per UG-40

L_H = MIN(2.5*(t - C), 2.5*(t_n - C_n) + t_e)
= MIN(2.5*(0.1575 - 0), 2.5*(0.1425 - 0) + 0)
= 0.3563 in

Nozzle required thickness per UG-27(c)(1)

t_{rn} = P*R_n/(S_n*E - 0.6*P)
= 379.938*0.42/(20,000*1 - 0.6*379.938)
= 0.0081 in

Required thickness t_r from UG-37(a)

t_r = P*R/(S*E - 0.6*P)
= 379.938*6.195/(20,000*1 - 0.6*379.938)
= 0.119 in

Area required per UG-37(c)

Allowable stresses: S_n = 20,000, S_v = 20,000 psi

f_{r1} = lesser of 1 or S_n/S_v = 1
f_{r2} = lesser of 1 or S_n/S_v = 1

A = $d*t_r*F + 2*t_n*t_r*F*(1 - f_{r1})$
= 0.84*0.119*1 + 2*0.1425*0.119*1*(1 - 1)
= <u>0.1</u> in^2

Area available from FIG. UG-37.1

A_1 = larger of the following= <u>0.0125</u> in^2

= $d*(E_1*t - F*t_r) - 2*t_n*(E_1*t - F*t_r)*(1 - f_{r1})$
= 0.84*(0.85*0.1575 - 1*0.119) - 2*0.1425*(0.85*0.1575 - 1*0.119)*(1 - 1)
= 0.0125 in^2

= $2*(t + t_n)*(E_1*t - F*t_r) - 2*t_n*(E_1*t - F*t_r)*(1 - f_{r1})$
= 2*(0.1575 + 0.1425)*(0.85*0.1575 - 1*0.119) - 2*0.1425*(0.85*0.1575 - 1*0.119)*(1 - 1)
= 0.0089 in^2

A_2 = smaller of the following= <u>0.0672</u> in^2

= $2*(t_n - t_{rn})*f_{r2}*L_{pr}$
= 2*(0.1425 - 0.0081)*1*0.25
= 0.0672 in^2

= $2*(t_n - t_{rn})*f_{r2}*L_{pr}$
= 2*(0.1425 - 0.0081)*1*0.25
= 0.0672 in^2

A_{41} = Leg^2*f_{r2}
= 0.1425^2*1
= <u>0.0203</u> in^2

Area = $A_1 + A_2 + A_{41}$
= 0.0125 + 0.0672 + 0.0203
= <u>0.1</u> in^2

As Area >= A the reinforcement is adequate.

UW-16(c) Weld Check

Fillet weld: t_{min} = lesser of 0.75 or t_n or t = 0.1425 in
$t_{c(min)}$ = lesser of 0.25 or 0.7*t_{min} = 0.0997 in
$t_{c(actual)}$ = 0.7*Leg = 0.7*0.1425 = 0.0998 in

The fillet weld size is satisfactory.

Weld strength calculations are not required for this detail which conforms to Fig. UW-16.1, sketch (c-e).

ASME B16.11 Coupling Wall Thickness Check

Wall thickness req'd per ASME B16.11 2.1.1: t_{r1} = 0.0106 in (E =1)
Wall thickness per UG-16(b): t_{r3} = 0.0625 in

Available nozzle wall thickness new, t_n = 0.875*0.1425 = 0.1247 in

The nozzle neck thickness is adequate.

ASME Section VIII Division 1, 2007 Edition, A08 Addenda

$t_{w(lower)}$ = 0.1875 in
Leg_{41} = 0.125 in

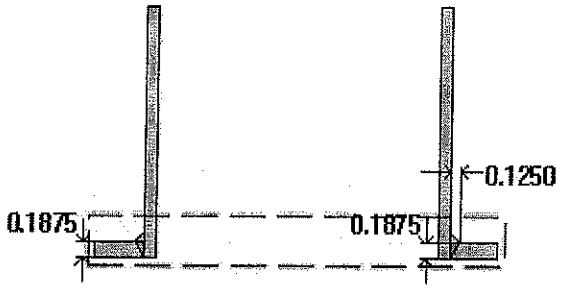

Note: round inside edges per UG-76(c)

Located on:	Ellipsoidal Head #2
Liquid static head included:	0 psi
Nozzle material specification:	SA-312 TP304 Wld & smls pipe (II-D p. 90, ln. 15)
Nozzle longitudinal joint efficiency:	1
Nozzle description:	3" Sch 10S
Nozzle orientation:	90°
Calculated as hillside:	yes
Local vessel minimum thickness:	0.1875 in
End of nozzle to datum line:	49.5 in
Nozzle inside diameter, new:	3.26 in
Nozzle nominal wall thickness:	0.12 in
Nozzle corrosion allowance:	0 in
Opening chord length:	3.5004 in
Projection available outside vessel, Lpr:	5.3592 in
Distance to head center, R:	3.62 in

This nozzle passes through a Category A joint.

Reinforcement Calculations for Internal Pressure

Available reinforcement per UG-37 governs the MAWP of this nozzle.

UG-37 Area Calculation Summary (in^2) For P = 209.27 psi @ 932 °F The opening is adequately reinforced							UG-45 Nozzle Wall Thickness Summary (in) The nozzle passes UG-45	
A required	A available	A_1	A_2	A_3	A_5	A welds	t_{req}	t_{min}
0.3156	0.3156	0.2423	0.0577	--	--	0.0156	0.0902	0.105

UG-41 Weld Failure Path Analysis Summary
The nozzle is exempt from weld strength calculations per UW-15(b)(1)

UW-16 Weld Sizing Summary			
Weld description	Required weld throat size (in)	Actual weld throat size (in)	Status
Nozzle to shell fillet (Leg_{41})	0.084	0.0875	weld size is adequate

Calculations for internal pressure 209.27 psi @ 932 °F

Nozzle Impact test exempt per UHA-51(g)(coincident ratio = 0.12871).

Parallel Limits of reinforcement per UG-40

L_R = MAX(d, R_n + (t_n - C_n) + (t - C))
= MAX(3.5004, 1.7502 + (0.12 - 0) + (0.1875 - 0))
= 3.5004 in

Outer Normal Limits of reinforcement per UG-40

L_H = MIN(2.5*(t - C), 2.5*(t_n - C_n) + t_e)
= MIN(2.5*(0.1875 - 0), 2.5*(0.12 - 0) + 0)
= 0.3 in

Nozzle required thickness per UG-27(c)(1)

t_{rn} = P*R_n/(S_n*E - 0.6*P)
= 209.2707*1.63/(14,400*1 - 0.6*209.2707)
= 0.0239 in

Required thickness t_r from UG-37(a)

t_r = P*D/(2*S*E - 0.2*P)
= 209.27*12.39/(2*14,400*1 - 0.2*209.27)
= 0.0902"

Area required per UG-37(c)

Allowable stresses: S_n = 14,400, S_v = 14,400 psi

f_{r1} = lesser of 1 or S_n/S_v = 1
f_{r2} = lesser of 1 or S_n/S_v = 1

A = $d*t_r*F + 2*t_n*t_r*F*(1 - f_{r1})$
= 3.5004*0.0902*1 + 2*0.12*0.0902*1*(1 - 1)
= <u>0.3156</u> in^2

Area available from FIG. UG-37.1

A_1 = larger of the following= <u>0.2423</u> in^2

= $d*(E_1*t - F*t_r) - 2*t_n*(E_1*t - F*t_r)*(1 - f_{r1})$
= 3.5004*(0.85*0.1875 - 1*0.0902) - 2*0.12*(0.85*0.1875 - 1*0.0902)*(1 - 1)
= 0.2423 in^2

= $2*(t + t_n)*(E_1*t - F*t_r) - 2*t_n*(E_1*t - F*t_r)*(1 - f_{r1})$
= 2*(0.1875 + 0.12)*(0.85*0.1875 - 1*0.0902) - 2*0.12*(0.85*0.1875 - 1*0.0902)*(1 - 1)
= 0.0426 in^2

A_2 = smaller of the following= <u>0.0577</u> in^2

= $5*(t_n - t_{rn})*f_{r2}*t$
= 5*(0.12 - 0.0239)*1*0.1875
= 0.0901 in^2

= $5*(t_n - t_{rn})*f_{r2}*t_n$
= 5*(0.12 - 0.0239)*1*0.12
= 0.0577 in^2

A_{41} = Leg^2*f_{r2}
= 0.125^2*1
= <u>0.0156</u> in^2

Area = $A_1 + A_2 + A_{41}$
= 0.2423 + 0.0577 + 0.0156
= <u>0.3156</u> in^2

As Area >= A the reinforcement is adequate.

UW-16(c) Weld Check

Fillet weld: t_{min} = lesser of 0.75 or t_n or t = 0.12 in
$t_{c(min)}$ = lesser of 0.25 or 0.7*t_{min} = 0.084 in
$t_{c(actual)}$ = 0.7*Leg = 0.7*0.125 = 0.0875 in

The fillet weld size is satisfactory.

Weld strength calculations are not required for this detail which conforms to Fig. UW-16.1, sketch (c-e).

UG-45 Nozzle Neck Thickness Check

Interpretation VIII-1-83-66 has been applied.

Wall thickness per UG-45(a):	t_{r1} = 0.0239 in (E =1)
Wall thickness per UG-45(b)(1):	t_{r2} = 0.0902 in
Wall thickness per UG-16(b):	t_{r3} = 0.0625 in
Standard wall pipe per UG-45(b)(4):	t_{r4} = 0.189 in
The greater of t_{r2} or t_{r3}:	t_{r5} = 0.0902 in
The lesser of t_{r4} or t_{r5}:	t_{r6} = 0.0902 in

Required per UG-45 is the larger of t_{r1} or t_{r6} = 0.0902 in

Available nozzle wall thickness new, t_n = 0.875*0.12 = 0.105 in

The nozzle neck thickness is adequate.

Reinforcement Calculations for MAP

Available reinforcement per UG-37 governs the MAP of this nozzle.

UG-37 Area Calculation Summary (in²) For P = 290.63 psi @ 70 °F The opening is adequately reinforced							UG-45 Nozzle Wall Thickness Summary (in) The nozzle passes UG-45	
A required	A available	A_1	A_2	A_3	A_5	A welds	t_{req}	t_{min}
0.3157	0.3157	0.2424	0.0577	--	--	0.0156	0.0902	0.105

UG-41 Weld Failure Path Analysis Summary
The nozzle is exempt from weld strength calculations per UW-15(b)(1)

UW-16 Weld Sizing Summary			
Weld description	Required weld throat size (in)	Actual weld throat size (in)	Status
Nozzle to shell fillet (Leg_{41})	0.084	0.0875	weld size is adequate

Calculations for internal pressure 290.63 psi @ 70 °F

Nozzle Impact test exempt per UHA-51(g)(coincident ratio = 0.12871).

Parallel Limits of reinforcement per UG-40

L_R = MAX(d, R_n + (t_n - C_n) + (t - C))
= MAX(3.5018, 1.7509 + (0.12 - 0) + (0.1875 - 0))
= 3.5018 in

Outer Normal Limits of reinforcement per UG-40

L_H = MIN(2.5*(t - C), 2.5*(t_n - C_n) + t_e)
= MIN(2.5*(0.1875 - 0), 2.5*(0.12 - 0) + 0)
= 0.3 in

Nozzle required thickness per UG-27(c)(1)

t_{rn} = P*R_n/(S_n*E - 0.6*P)
= 290.6275*1.63/(20,000*1 - 0.6*290.6275)

= 0.0239 in

Required thickness t_r from UG-37(a)

t_r = P*D*K / (2*S*E - 0.2*P)
= 290.63*12.39*1 / (2*20,000*1 - 0.2*290.63)
= 0.0902"

Area required per UG-37(c)

Allowable stresses: S_n = 20,000, S_v = 20,000 psi

f_{r1} = lesser of 1 or S_n/S_v = 1
f_{r2} = lesser of 1 or S_n/S_v = 1

A = $d*t_r*F + 2*t_n*t_r*F*(1 - f_{r1})$
= 3.5018*0.0902*1 + 2*0.12*0.0902*1*(1 - 1)
= <u>0.3157</u> in^2

Area available from FIG. UG-37.1

A_1 = larger of the following= <u>0.2424</u> in^2

= $d*(E_1*t - F*t_r) - 2*t_n*(E_1*t - F*t_r)*(1 - f_{r1})$
= 3.5018*(0.85*0.1875 - 1*0.0902) - 2*0.12*(0.85*0.1875 - 1*0.0902)*(1 - 1)
= 0.2424 in^2

= $2*(t + t_n)*(E_1*t - F*t_r) - 2*t_n*(E_1*t - F*t_r)*(1 - f_{r1})$
= 2*(0.1875 + 0.12)*(0.85*0.1875 - 1*0.0902) - 2*0.12*(0.85*0.1875 - 1*0.0902)*(1 - 1)
= 0.0426 in^2

A_2 = smaller of the following= <u>0.0577</u> in^2

= $5*(t_n - t_{rn})*f_{r2}*t$
= 5*(0.12 - 0.0239)*1*0.1875
= 0.0901 in^2

= $5*(t_n - t_{rn})*f_{r2}*t_n$
= 5*(0.12 - 0.0239)*1*0.12
= 0.0577 in^2

A_{41} = Leg^2*f_{r2}
= 0.125^2*1
= <u>0.0156</u> in^2

Area = $A_1 + A_2 + A_{41}$
= 0.2424 + 0.0577 + 0.0156
= <u>0.3157</u> in^2

As Area >= A the reinforcement is adequate.

UW-16(c) Weld Check

Fillet weld: t_{min} = lesser of 0.75 or t_n or t = 0.12 in
$t_{c(min)}$ = lesser of 0.25 or $0.7*t_{min}$ = <u>0.084</u> in
$t_{c(actual)}$ = 0.7*Leg = 0.7*0.125 = 0.0875 in

The fillet weld size is satisfactory.

Weld strength calculations are not required for this detail which conforms to Fig. UW-16.1, sketch (c-e).

UG-45 Nozzle Neck Thickness Check

Interpretation VIII-1-83-66 has been applied.

Wall thickness per UG-45(a):	t_{r1} = 0.0239 in (E =1)
Wall thickness per UG-45(b)(1):	t_{r2} = 0.0902 in
Wall thickness per UG-16(b):	t_{r3} = 0.0625 in
Standard wall pipe per UG-45(b)(4):	t_{r4} = 0.189 in
The greater of t_{r2} or t_{r3}:	t_{r5} = 0.0902 in
The lesser of t_{r4} or t_{r5}:	t_{r6} = 0.0902 in

Required per UG-45 is the larger of t_{r1} or t_{r6} = <u>0.0902</u> in

Available nozzle wall thickness new, t_n = 0.875*0.12 = 0.105 in

The nozzle neck thickness is adequate.

ASME Section VIII Division 1, 2007 Edition, A08 Addenda

$t_{w(lower)}$ = 0.1875 in
Leg_{41} = 0.125 in

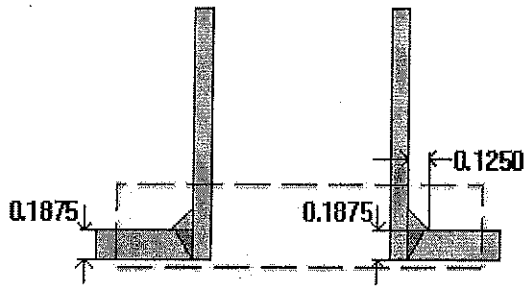

Note: round inside edges per UG-76(c)

Located on:	Ellipsoidal Head #2
Liquid static head included:	0 psi
Nozzle material specification:	SA-312 TP304 Wld & smls pipe (II-D p. 90, ln. 15)
Nozzle longitudinal joint efficiency:	1
Nozzle description:	1" Sch 10S
Nozzle orientation:	270°
Calculated as hillside:	yes
Local vessel minimum thickness:	0.1875 in
End of nozzle to datum line:	45.5 in
Nozzle inside diameter, new:	1.097 in
Nozzle nominal wall thickness:	0.109 in
Nozzle corrosion allowance:	0 in
Opening chord length:	1.1007 in
Projection available outside vessel, Lpr:	1.2197 in
Distance to head center, R:	1 in

This nozzle passes through a Category A joint.

Reinforcement Calculations for Internal Pressure

The thickness requirements of UG-45 govern the MAWP of this nozzle.

UG-37 Area Calculation Summary (in^2) For P = 221.3 psi @ 932 °F The opening is adequately reinforced							UG-45 Nozzle Wall Thickness Summary (in) The nozzle passes UG-45	
A required	A available	A_1	A_2	A_3	A_5	A welds	t_{req}	t_{min}
0.0945	0.1514	0.081	0.0548	--	--	0.0156	0.0953	0.0954

UG-41 Weld Failure Path Analysis Summary
The nozzle is exempt from weld strength calculations per UW-15(b)(1)

UW-16 Weld Sizing Summary			
Weld description	Required weld throat size (in)	Actual weld throat size (in)	Status
Nozzle to shell fillet (Leg_{41})	0.0763	0.0875	weld size is adequate

Calculations for internal pressure 221.3 psi @ 932 °F

Nozzle Impact test exempt per UHA-51(g)(coincident ratio = 0.04768).

Parallel Limits of reinforcement per UG-40

L_R = MAX(d, R_n + (t_n - C_n) + (t - C))
= MAX(1.1007, 0.5504 + (0.109 - 0) + (0.1875 - 0))
= 1.1007 in

Outer Normal Limits of reinforcement per UG-40

L_H = MIN(2.5*(t - C), 2.5*(t_n - C_n) + t_e)
= MIN(2.5*(0.1875 - 0), 2.5*(0.109 - 0) + 0)
= 0.2725 in

Nozzle required thickness per UG-27(c)(1)

t_{rn} = P*R_n/(S_n*E - 0.6*P)
= 221.2951*0.5485/(14,400*1 - 0.6*221.2951)
= 0.0085 in

Required thickness t_r from UG-37(a)(c)

t_r = $P*K_1*D/(2*S*E - 0.2*P)$
= 221.2951*0.9*12.39/(2*14,400*1 - 0.2*221.2951)
= 0.0858 in

Area required per UG-37(c)

Allowable stresses: S_n = 14,400, S_v = 14,400 psi

f_{r1} = lesser of 1 or S_n/S_v = 1
f_{r2} = lesser of 1 or S_n/S_v = 1

A = $d*t_r*F + 2*t_n*t_r*F*(1 - f_{r1})$
= 1.1007*0.0858*1 + 2*0.109*0.0858*1*(1 - 1)
= <u>0.0945</u> in^2

Area available from FIG. UG-37.1

A_1 = larger of the following= <u>0.081</u> in^2

= $d*(E_1*t - F*t_r) - 2*t_n*(E_1*t - F*t_r)*(1 - f_{r1})$
= 1.1007*(0.85*0.1875 - 1*0.0858) - 2*0.109*(0.85*0.1875 - 1*0.0858)*(1 - 1)
= 0.081 in^2

= $2*(t + t_n)*(E_1*t - F*t_r) - 2*t_n*(E_1*t - F*t_r)*(1 - f_{r1})$
= 2*(0.1875 + 0.109)*(0.85*0.1875 - 1*0.0858) - 2*0.109*(0.85*0.1875 - 1*0.0858)*(1 - 1)
= 0.0436 in^2

A_2 = smaller of the following= <u>0.0548</u> in^2

= $5*(t_n - t_{rn})*f_{r2}*t$
= 5*(0.109 - 0.0085)*1*0.1875
= 0.0942 in^2

= $5*(t_n - t_{rn})*f_{r2}*t_n$
= 5*(0.109 - 0.0085)*1*0.109
= 0.0548 in^2

A_{41} = Leg^2*f_{r2}
= 0.125^2*1
= <u>0.0156</u> in^2

Area = $A_1 + A_2 + A_{41}$
= 0.081 + 0.0548 + 0.0156
= <u>0.1514</u> in^2

As Area >= A the reinforcement is adequate.

UW-16(c) Weld Check

Fillet weld: t_{min} = lesser of 0.75 or t_n or t = 0.109 in
$t_{c(min)}$ = lesser of 0.25 or $0.7*t_{min}$ = <u>0.0763</u> in
$t_{c(actual)}$ = 0.7*Leg = 0.7*0.125 = 0.0875 in

The fillet weld size is satisfactory.

Weld strength calculations are not required for this detail which conforms to Fig. UW-16.1, sketch (c-e).

UG-45 Nozzle Neck Thickness Check

Interpretation VIII-1-83-66 has been applied.

Wall thickness per UG-45(a):	t_{r1} = 0.0085 in (E =1)
Wall thickness per UG-45(b)(1):	t_{r2} = 0.0953 in
Wall thickness per UG-16(b):	t_{r3} = 0.0625 in
Standard wall pipe per UG-45(b)(4):	t_{r4} = 0.1164 in
The greater of t_{r2} or t_{r3}:	t_{r5} = 0.0953 in
The lesser of t_{r4} or t_{r5}:	t_{r6} = 0.0953 in

Required per UG-45 is the larger of t_{r1} or t_{r6} = 0.0953 in

Available nozzle wall thickness new, t_n = 0.875*0.109 = 0.0954 in

The nozzle neck thickness is adequate.

Reinforcement Calculations for MAP

The thickness requirements of UG-45 govern the MAP of this nozzle.

UG-37 Area Calculation Summary (in^2) For P = 307.35 psi @ 70 °F The opening is adequately reinforced							UG-45 Nozzle Wall Thickness Summary (in) The nozzle passes UG-45	
A required	A available	A_1	A_2	A_3	A_5	A welds	t_{req}	t_{min}
0.0945	0.1514	0.081	0.0548	--	--	0.0156	0.0953	0.0954

UG-41 Weld Failure Path Analysis Summary
The nozzle is exempt from weld strength calculations per UW-15(b)(1)

UW-16 Weld Sizing Summary			
Weld description	Required weld throat size (in)	Actual weld throat size (in)	Status
Nozzle to shell fillet (Leg_{41})	0.0763	0.0875	weld size is adequate

Calculations for internal pressure 307.35 psi @ 70 °F

Nozzle Impact test exempt per UHA-51(g)(coincident ratio = 0.04768).

Parallel Limits of reinforcement per UG-40

L_R = MAX(d, R_n + (t_n - C_n) + (t - C))
= MAX(1.1007, 0.5504 + (0.109 - 0) + (0.1875 - 0))
= 1.1007 in

Outer Normal Limits of reinforcement per UG-40

L_H = MIN(2.5*(t - C), 2.5*(t_n - C_n) + t_e)
= MIN(2.5*(0.1875 - 0), 2.5*(0.109 - 0) + 0)
= 0.2725 in

Nozzle required thickness per UG-27(c)(1)

t_{rn} = P*R_n/(S_n*E - 0.6*P)
= 307.351*0.5485/(20,000*1 - 0.6*307.351)

$= \quad 0.0085$ in

Required thickness t_r from UG-37(a)(c)

$t_r = P*K_1*D/(2*S*E - 0.2*P)$
$= 307.351*0.9*12.39/(2*20,000*1 - 0.2*307.351)$
$= 0.0858$ in

Area required per UG-37(c)

Allowable stresses: $S_n = 20,000$, $S_v = 20,000$ psi

f_{r1} = lesser of 1 or $S_n/S_v = 1$
f_{r2} = lesser of 1 or $S_n/S_v = 1$

$A = d*t_r*F + 2*t_n*t_r*F*(1 - f_{r1})$
$= 1.1007*0.0858*1 + 2*0.109*0.0858*1*(1 - 1)$
$= \underline{0.0945}$ in^2

Area available from FIG. UG-37.1

A_1 = larger of the following= $\underline{0.081}$ in^2

$= d*(E_1*t - F*t_r) - 2*t_n*(E_1*t - F*t_r)*(1 - f_{r1})$
$= 1.1007*(0.85*0.1875 - 1*0.0858) - 2*0.109*(0.85*0.1875 - 1*0.0858)*(1 - 1)$
$= 0.081$ in^2

$= 2*(t + t_n)*(E_1*t - F*t_r) - 2*t_n*(E_1*t - F*t_r)*(1 - f_{r1})$
$= 2*(0.1875 + 0.109)*(0.85*0.1875 - 1*0.0858) - 2*0.109*(0.85*0.1875 - 1*0.0858)*(1 - 1)$
$= 0.0436$ in^2

A_2 = smaller of the following= $\underline{0.0548}$ in^2

$= 5*(t_n - t_{rn})*f_{r2}*t$
$= 5*(0.109 - 0.0085)*1*0.1875$
$= 0.0942$ in^2

$= 5*(t_n - t_{rn})*f_{r2}*t_n$
$= 5*(0.109 - 0.0085)*1*0.109$
$= 0.0548$ in^2

$A_{41} = Leg^2*f_{r2}$
$= 0.125^2*1$
$= \underline{0.0156}$ in^2

Area $= A_1 + A_2 + A_{41}$
$= 0.081 + 0.0548 + 0.0156$
$= \underline{0.1514}$ in^2

As Area >= A the reinforcement is adequate.

UW-16(c) Weld Check

Fillet weld: t_{min} = lesser of 0.75 or t_n or t = 0.109 in
$t_{c(min)}$ = lesser of 0.25 or 0.7*t_{min} = 0.0763 in
$t_{c(actual)}$ = 0.7*Leg = 0.7*0.125 = 0.0875 in

The fillet weld size is satisfactory.

Weld strength calculations are not required for this detail which conforms to Fig. UW-16.1, sketch (c-e).

UG-45 Nozzle Neck Thickness Check

Interpretation VIII-1-83-66 has been applied.

Wall thickness per UG-45(a):	t_{r1} = 0.0085 in (E =1)
Wall thickness per UG-45(b)(1):	t_{r2} = 0.0953 in
Wall thickness per UG-16(b):	t_{r3} = 0.0625 in
Standard wall pipe per UG-45(b)(4):	t_{r4} = 0.1164 in
The greater of t_{r2} or t_{r3}:	t_{r5} = 0.0953 in
The lesser of t_{r4} or t_{r5}:	t_{r6} = 0.0953 in

Required per UG-45 is the larger of t_{r1} or t_{r6} = 0.0953 in

Available nozzle wall thickness new, t_n = 0.875*0.109 = 0.0954 in

The nozzle neck thickness is adequate.

ASME Section VIII Division 1, 2007 Edition, A08 Addenda

$t_{w(lower)}$ = 0.1875 in
Leg_{41} = 0.109 in

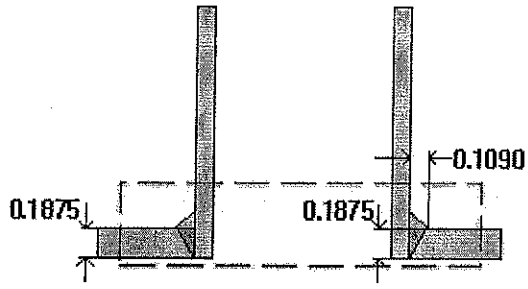

Note: round inside edges per UG-76(c)

Located on:	Ellipsoidal Head #1
Liquid static head included:	0 psi
Nozzle material specification:	SA-312 TP304 Wld & smls pipe (II-D p. 90, ln. 15)
Nozzle longitudinal joint efficiency:	1
Nozzle description:	1" Sch 10S
Nozzle orientation:	0°
Calculated as hillside:	no
Local vessel minimum thickness:	0.1875 in
End of nozzle to datum line:	-5.76 in
Nozzle inside diameter, new:	1.097 in
Nozzle nominal wall thickness:	0.109 in
Nozzle corrosion allowance:	0 in
Projection available outside vessel, Lpr:	0.9925 in
Distance to head center, R:	0 in

This nozzle passes through a Category A joint.

Reinforcement Calculations for Internal Pressure

The thickness requirements of UG-45 govern the MAWP of this nozzle.

UG-37 Area Calculation Summary (in^2) For P = 221.3 psi @ 932 °F The opening is adequately reinforced							UG-45 Nozzle Wall Thickness Summary (in) The nozzle passes UG-45	
A required	A available	A_1	A_2	A_3	A_5	A welds	t_{req}	t_{min}
0.0941	0.1474	0.0807	0.0548	--	--	0.0119	0.0953	0.0954

UG-41 Weld Failure Path Analysis Summary
The nozzle is exempt from weld strength calculations per UW-15(b)(1)

UW-16 Weld Sizing Summary			
Weld description	Required weld throat size (in)	Actual weld throat size (in)	Status
Nozzle to shell fillet (Leg_{41})	0.0763	0.0763	weld size is adequate

Calculations for internal pressure 221.3 psi @ 932 °F

Nozzle Impact test exempt per UHA-51(g)(coincident ratio = 0.04768).

Parallel Limits of reinforcement per UG-40

L_R = MAX(d, R_n + (t_n - C_n) + (t - C))
= MAX(1.097, 0.5485 + (0.109 - 0) + (0.1875 - 0))
= 1.097 in

Outer Normal Limits of reinforcement per UG-40

L_H = MIN(2.5*(t - C), 2.5*(t_n - C_n) + t_e)
= MIN(2.5*(0.1875 - 0), 2.5*(0.109 - 0) + 0)
= 0.2725 in

Nozzle required thickness per UG-27(c)(1)

t_{rn} = P*R_n/(S_n*E - 0.6*P)
= 221.2951*0.5485/(14,400*1 - 0.6*221.2951)
= 0.0085 in

Required thickness t_r from UG-37(a)(c)

t_r = $P*K_1*D/(2*S*E - 0.2*P)$
= 221.2951*0.9*12.39/(2*14,400*1 - 0.2*221.2951)
= 0.0858 in

Area required per UG-37(c)

Allowable stresses: S_n = 14,400, S_v = 14,400 psi

f_{r1} = lesser of 1 or S_n/S_v = 1
f_{r2} = lesser of 1 or S_n/S_v = 1

A = $d*t_r*F + 2*t_n*t_r*F*(1 - f_{r1})$
= 1.097*0.0858*1 + 2*0.109*0.0858*1*(1 - 1)
= <u>0.0941</u> in^2

Area available from FIG. UG-37.1

A_1 = larger of the following= <u>0.0807</u> in^2

= $d*(E_1*t - F*t_r) - 2*t_n*(E_1*t - F*t_r)*(1 - f_{r1})$
= 1.097*(0.85*0.1875 - 1*0.0858) - 2*0.109*(0.85*0.1875 - 1*0.0858)*(1 - 1)
= 0.0807 in^2

= $2*(t + t_n)*(E_1*t - F*t_r) - 2*t_n*(E_1*t - F*t_r)*(1 - f_{r1})$
= 2*(0.1875 + 0.109)*(0.85*0.1875 - 1*0.0858) - 2*0.109*(0.85*0.1875 - 1*0.0858)*(1 - 1)
= 0.0436 in^2

A_2 = smaller of the following= <u>0.0548</u> in^2

= $5*(t_n - t_m)*f_{r2}*t$
= 5*(0.109 - 0.0085)*1*0.1875
= 0.0942 in^2

= $5*(t_n - t_m)*f_{r2}*t_n$
= 5*(0.109 - 0.0085)*1*0.109
= 0.0548 in^2

A_{41} = Leg^2*f_{r2}
= 0.109^2*1
= <u>0.0119</u> in^2

Area = $A_1 + A_2 + A_{41}$
= 0.0807 + 0.0548 + 0.0119
= <u>0.1474</u> in^2

As Area >= A the reinforcement is adequate.

UW-16(c) Weld Check

Fillet weld: t_{min} = lesser of 0.75 or t_n or t = 0.109 in
$t_{c(min)}$ = lesser of 0.25 or 0.7*t_{min} = 0.0763 in
$t_{c(actual)}$ = 0.7*Leg = 0.7*0.109 = 0.0763 in

The fillet weld size is satisfactory.

Weld strength calculations are not required for this detail which conforms to Fig. UW-16.1, sketch (c-e).

UG-45 Nozzle Neck Thickness Check

Interpretation VIII-1-83-66 has been applied.

Wall thickness per UG-45(a):	t_{r1} = 0.0085 in (E =1)
Wall thickness per UG-45(b)(1):	t_{r2} = 0.0953 in
Wall thickness per UG-16(b):	t_{r3} = 0.0625 in
Standard wall pipe per UG-45(b)(4):	t_{r4} = 0.1164 in
The greater of t_{r2} or t_{r3}:	t_{r5} = 0.0953 in
The lesser of t_{r4} or t_{r5}:	t_{r6} = 0.0953 in

Required per UG-45 is the larger of t_{r1} or t_{r6} = 0.0953 in

Available nozzle wall thickness new, t_n = 0.875*0.109 = 0.0954 in

The nozzle neck thickness is adequate.

Reinforcement Calculations for MAP

The thickness requirements of UG-45 govern the MAP of this nozzle.

UG-37 Area Calculation Summary (in^2) For P = 307.35 psi @ 70 °F The opening is adequately reinforced							UG-45 Nozzle Wall Thickness Summary (in) The nozzle passes UG-45	
A required	A available	A_1	A_2	A_3	A_5	A welds	t_{req}	t_{min}
0.0941	0.1474	0.0807	0.0548	--	--	0.0119	0.0953	0.0954

UG-41 Weld Failure Path Analysis Summary
The nozzle is exempt from weld strength calculations per UW-15(b)(1)

UW-16 Weld Sizing Summary			
Weld description	Required weld throat size (in)	Actual weld throat size (in)	Status
Nozzle to shell fillet (Leg_{41})	0.0763	0.0763	weld size is adequate

Calculations for internal pressure 307.35 psi @ 70 °F

Nozzle Impact test exempt per UHA-51(g)(coincident ratio = 0.04768).

Parallel Limits of reinforcement per UG-40

L_R = MAX(d, R_n + (t_n - C_n) + (t - C))
= MAX(1.097, 0.5485 + (0.109 - 0) + (0.1875 - 0))
= 1.097 in

Outer Normal Limits of reinforcement per UG-40

L_H = MIN(2.5*(t - C), 2.5*(t_n - C_n) + t_e)
= MIN(2.5*(0.1875 - 0), 2.5*(0.109 - 0) + 0)
= 0.2725 in

Nozzle required thickness per UG-27(c)(1)

t_{rn} = P*R_n/(S_n*E - 0.6*P)
= 307.351*0.5485/(20,000*1 - 0.6*307.351)

$= \quad 0.0085$ in

Required thickness t_r from UG-37(a)(c)

$t_r = P*K_1*D/(2*S*E - 0.2*P)$
$= 307.351*0.9*12.39/(2*20,000*1 - 0.2*307.351)$
$= 0.0858$ in

Area required per UG-37(c)

Allowable stresses: $S_n = 20,000$, $S_v = 20,000$ psi

f_{r1} = lesser of 1 or $S_n/S_v = 1$
f_{r2} = lesser of 1 or $S_n/S_v = 1$

$A = d*t_r*F + 2*t_n*t_r*F*(1 - f_{r1})$
$= 1.097*0.0858*1 + 2*0.109*0.0858*1*(1 - 1)$
$= \underline{0.0941}$ in^2

Area available from FIG. UG-37.1

A_1 = larger of the following= $\underline{0.0807}$ in^2

$= d*(E_1*t - F*t_r) - 2*t_n*(E_1*t - F*t_r)*(1 - f_{r1})$
$= 1.097*(0.85*0.1875 - 1*0.0858) - 2*0.109*(0.85*0.1875 - 1*0.0858)*(1 - 1)$
$= 0.0807$ in^2

$= 2*(t + t_n)*(E_1*t - F*t_r) - 2*t_n*(E_1*t - F*t_r)*(1 - f_{r1})$
$= 2*(0.1875 + 0.109)*(0.85*0.1875 - 1*0.0858) - 2*0.109*(0.85*0.1875 - 1*0.0858)*(1 - 1)$
$= 0.0436$ in^2

A_2 = smaller of the following= $\underline{0.0548}$ in^2

$= 5*(t_n - t_{rn})*f_{r2}*t$
$= 5*(0.109 - 0.0085)*1*0.1875$
$= 0.0942$ in^2

$= 5*(t_n - t_{rn})*f_{r2}*t_n$
$= 5*(0.109 - 0.0085)*1*0.109$
$= 0.0548$ in^2

$A_{41} = Leg^2*f_{r2}$
$= 0.109^2*1$
$= \underline{0.0119}$ in^2

Area $= A_1 + A_2 + A_{41}$
$= 0.0807 + 0.0548 + 0.0119$
$= \underline{0.1474}$ in^2

As Area >= A the reinforcement is adequate.

UW-16(c) Weld Check

Fillet weld: t_{min} = lesser of 0.75 or t_n or t = 0.109 in
$t_{c(min)}$ = lesser of 0.25 or 0.7*t_{min} = 0.0763 in
$t_{c(actual)}$ = 0.7*Leg = 0.7*0.109 = 0.0763 in

The fillet weld size is satisfactory.

Weld strength calculations are not required for this detail which conforms to Fig. UW-16.1, sketch (c-e).

UG-45 Nozzle Neck Thickness Check

Interpretation VIII-1-83-66 has been applied.

Wall thickness per UG-45(a):	t_{r1} = 0.0085 in (E =1)
Wall thickness per UG-45(b)(1):	t_{r2} = 0.0953 in
Wall thickness per UG-16(b):	t_{r3} = 0.0625 in
Standard wall pipe per UG-45(b)(4):	t_{r4} = 0.1164 in
The greater of t_{r2} or t_{r3}:	t_{r5} = 0.0953 in
The lesser of t_{r4} or t_{r5}:	t_{r6} = 0.0953 in

Required per UG-45 is the larger of t_{r1} or t_{r6} = 0.0953 in

Available nozzle wall thickness new, t_n = 0.875*0.109 = 0.0954 in

The nozzle neck thickness is adequate.

ASME Section VIII Division 1, 2007 Edition, A08 Addenda

$t_{w(lower)}$ = 0.18 in
Leg_{41} = 0.1425 in

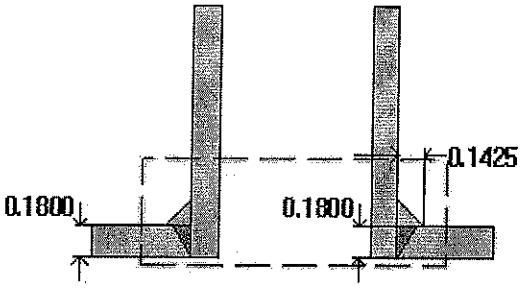

Note: round inside edges per UG-76(c)

Located on:	Cylinder #1
Liquid static head included:	0 psi
Nozzle material specification:	SA-312 TP304 Wld & smls pipe (II-D p. 90, ln. 15)
Nozzle longitudinal joint efficiency:	1
Nozzle description:	0.500" Class 3000 - threaded
Nozzle orientation:	0°
Local vessel minimum thickness:	0.1575 in
Nozzle center line offset to datum line:	37.5 in
End of nozzle to shell center:	6.625 in
Nozzle inside diameter, new:	0.84 in
Nozzle nominal wall thickness:	0.1425 in
Nozzle corrosion allowance:	0 in
Projection available outside vessel, Lpr:	0.25 in

This nozzle passes through a Category A joint.

Reinforcement Calculations for Internal Pressure

Available reinforcement per UG-37 governs the MAWP of this nozzle.

UG-37 Area Calculation Summary (in^2) For P = 273.56 psi @ 932 °F The opening is adequately reinforced							UG-45 Nozzle Wall Thickness Summary (in) The nozzle passes UG-45	
A required	A available	A_1	A_2	A_3	A_5	A welds	t_{req}	t_{min}
0.1	0.1	0.0125	0.0672	--	--	0.0203	0.0625	0.1247

UG-41 Weld Failure Path Analysis Summary
The nozzle is exempt from weld strength calculations per UW-15(b)(1)

UW-16 Weld Sizing Summary			
Weld description	Required weld throat size (in)	Actual weld throat size (in)	Status
Nozzle to shell fillet (Leg_{41})	0.0997	0.0997	weld size is adequate

Calculations for internal pressure 273.56 psi @ 932 °F

Nozzle Impact test exempt per UHA-51(g)(coincident ratio = 0.02793).

Parallel Limits of reinforcement per UG-40

L_R = MAX(d, R_n + (t_n - C_n) + (t - C))
= MAX(0.84, 0.42 + (0.1425 - 0) + (0.1575 - 0))
= 0.84 in

Outer Normal Limits of reinforcement per UG-40

L_H = MIN(2.5*(t - C), 2.5*(t_n - C_n) + t_e)
= MIN(2.5*(0.1575 - 0), 2.5*(0.1425 - 0) + 0)
= 0.3563 in

Nozzle required thickness per UG-27(c)(1)

t_{rn} = P*R_n/(S_n*E - 0.6*P)
= 273.557*0.42/(14,400*1 - 0.6*273.557)
= 0.0081 in

Required thickness t_r from UG-37(a)

t_r = P*R/(S*E - 0.6*P)
= 273.557*6.195/(14,400*1 - 0.6*273.557)
= 0.119 in

Area required per UG-37(c)

Allowable stresses: S_n = 14,400, S_v = 14,400 psi

f_{r1} = lesser of 1 or S_n/S_v = 1
f_{r2} = lesser of 1 or S_n/S_v = 1

A = $d*t_r*F + 2*t_n*t_r*F*(1 - f_{r1})$
= 0.84*0.119*1 + 2*0.1425*0.119*1*(1 - 1)
= <u>0.1</u> in^2

Area available from FIG. UG-37.1

A_1 = larger of the following= <u>0.0125</u> in^2

= $d*(E_1*t - F*t_r) - 2*t_n*(E_1*t - F*t_r)*(1 - f_{r1})$
= 0.84*(0.85*0.1575 - 1*0.119) - 2*0.1425*(0.85*0.1575 - 1*0.119)*(1 - 1)
= 0.0125 in^2

= $2*(t + t_n)*(E_1*t - F*t_r) - 2*t_n*(E_1*t - F*t_r)*(1 - f_{r1})$
= 2*(0.1575 + 0.1425)*(0.85*0.1575 - 1*0.119) - 2*0.1425*(0.85*0.1575 - 1*0.119)*(1 - 1)
= 0.0089 in^2

A_2 = smaller of the following= <u>0.0672</u> in^2

= $2*(t_n - t_{rn})*f_{r2}*L_{pr}$
= 2*(0.1425 - 0.0081)*1*0.25
= 0.0672 in^2

= $2*(t_n - t_{rn})*f_{r2}*L_{pr}$
= 2*(0.1425 - 0.0081)*1*0.25
= 0.0672 in^2

A_{41} = Leg^2*f_{r2}
= 0.1425^2*1
= <u>0.0203</u> in^2

Area = $A_1 + A_2 + A_{41}$
= 0.0125 + 0.0672 + 0.0203
= <u>0.1</u> in^2

As Area >= A the reinforcement is adequate.

UW-16(c) Weld Check

Fillet weld: t_{min} = lesser of 0.75 or t_n or t = 0.1425 in
$t_{c(min)}$ = lesser of 0.25 or 0.7*t_{min} = 0.0997 in
$t_{c(actual)}$ = 0.7*Leg = 0.7*0.1425 = 0.0998 in

The fillet weld size is satisfactory.

Weld strength calculations are not required for this detail which conforms to Fig. UW-16.1, sketch (c-e).

ASME B16.11 Coupling Wall Thickness Check

Wall thickness req'd per ASME B16.11 2.1.1: t_{r1} = 0.0106 in (E =1)
Wall thickness per UG-16(b): t_{r3} = 0.0625 in

Available nozzle wall thickness new, t_n = 0.875*0.1425 = 0.1247 in

The nozzle neck thickness is adequate.

Reinforcement Calculations for MAP

Available reinforcement per UG-37 governs the MAP of this nozzle.

UG-37 Area Calculation Summary (in²) For P = 379.94 psi @ 70 °F The opening is adequately reinforced							UG-45 Nozzle Wall Thickness Summary (in) The nozzle passes UG-45	
A required	A available	A_1	A_2	A_3	A_5	A welds	t_{req}	t_{min}
0.1	0.1	0.0125	0.0672	--	--	0.0203	0.0625	0.1247

UG-41 Weld Failure Path Analysis Summary
The nozzle is exempt from weld strength calculations per UW-15(b)(1)

UW-16 Weld Sizing Summary			
Weld description	Required weld throat size (in)	Actual weld throat size (in)	Status
Nozzle to shell fillet (Leg_{41})	0.0997	0.0997	weld size is adequate

Calculations for internal pressure 379.94 psi @ 70 °F

Nozzle Impact test exempt per UHA-51(g)(coincident ratio = 0.02793).

Parallel Limits of reinforcement per UG-40

L_R = MAX(d, R_n + (t_n - C_n) + (t - C))
= MAX(0.84, 0.42 + (0.1425 - 0) + (0.1575 - 0))
= 0.84 in

Outer Normal Limits of reinforcement per UG-40

L_H = MIN(2.5*(t - C), 2.5*(t_n - C_n) + t_e)
= MIN(2.5*(0.1575 - 0), 2.5*(0.1425 - 0) + 0)
= 0.3563 in

Nozzle required thickness per UG-27(c)(1)

t_{rn} = P*R_n/(S_n*E - 0.6*P)
= 379.938*0.42/(20,000*1 - 0.6*379.938)
= 0.0081 in

Required thickness t_r from UG-37(a)

t_r = P*R/(S*E - 0.6*P)
= 379.938*6.195/(20,000*1 - 0.6*379.938)
= 0.119 in

Area required per UG-37(c)

Allowable stresses: S_n = 20,000, S_v = 20,000 psi

f_{r1} = lesser of 1 or S_n/S_v = 1
f_{r2} = lesser of 1 or S_n/S_v = 1

A = $d*t_r*F + 2*t_n*t_r*F*(1 - f_{r1})$
= 0.84*0.119*1 + 2*0.1425*0.119*1*(1 - 1)
= <u>0.1</u> in^2

Area available from FIG. UG-37.1

A_1 = larger of the following= <u>0.0125</u> in^2

= $d*(E_1*t - F*t_r) - 2*t_n*(E_1*t - F*t_r)*(1 - f_{r1})$
= 0.84*(0.85*0.1575 - 1*0.119) - 2*0.1425*(0.85*0.1575 - 1*0.119)*(1 - 1)
= 0.0125 in^2

= $2*(t + t_n)*(E_1*t - F*t_r) - 2*t_n*(E_1*t - F*t_r)*(1 - f_{r1})$
= 2*(0.1575 + 0.1425)*(0.85*0.1575 - 1*0.119) - 2*0.1425*(0.85*0.1575 - 1*0.119)*(1 - 1)
= 0.0089 in^2

A_2 = smaller of the following= <u>0.0672</u> in^2

= $2*(t_n - t_{rn})*f_{r2}*L_{pr}$
= 2*(0.1425 - 0.0081)*1*0.25
= 0.0672 in^2

= $2*(t_n - t_{rn})*f_{r2}*L_{pr}$
= 2*(0.1425 - 0.0081)*1*0.25
= 0.0672 in^2

A_{41} = Leg^2*f_{r2}
= 0.1425^2*1
= <u>0.0203</u> in^2

Area = $A_1 + A_2 + A_{41}$
= 0.0125 + 0.0672 + 0.0203
= <u>0.1</u> in^2

As Area >= A the reinforcement is adequate.

UW-16(c) Weld Check

Fillet weld: t_{min} = lesser of 0.75 or t_n or t = 0.1425 in
$t_{c(min)}$ = lesser of 0.25 or 0.7*t_{min} = 0.0997 in
$t_{c(actual)}$ = 0.7*Leg = 0.7*0.1425 = 0.0998 in

The fillet weld size is satisfactory.

Weld strength calculations are not required for this detail which conforms to Fig. UW-16.1, sketch (c-e).

ASME B16.11 Coupling Wall Thickness Check

Wall thickness req'd per ASME B16.11 2.1.1: t_{r1} = 0.0106 in (E =1)
Wall thickness per UG-16(b): t_{r3} = 0.0625 in

Available nozzle wall thickness new, t_n = 0.875*0.1425 = 0.1247 in

The nozzle neck thickness is adequate.

Clip #1

Geometry

Height(radial):	1"
Width (circumferential):	1"
Length	0.5"
Fillet Weld Size:	0.25"
Location Angle:	30.00°

Applied Loads

Radial load:	P_r =	0	lb_f
Circumferential moment:	M_c =	0	lb_f-in
Circumferential shear:	V_c =	0	lb_f
Longitudinal moment:	M_L =	0	lb_f-in
Longitudinal shear:	V_L =	1,500	lb_f
Torsion moment:	M_t =	0	lb_f-in
Internal pressure:	P =	165	psi
Mean shell radius:	R_m =	6.2738	in
Shell yield stress:	S_y =	16,000	psi

Maximum stresses due to the applied loads at the lug edge (includes pressure)

R_m / t = 6.2738 / 0.1575 = 39.8333

C_1 = 0.75, C_2 = 0.5 in

Local circumferential pressure stress = P^*R_i/t =6,490 psi

Local longitudinal pressure stress = $P^*R_i/2t$ =3,245 psi

Maximum combined stress (P_L+P_b+Q) = 10,062 psi
Allowable combined stress (P_L+P_b+Q) = +-3*S = +-43,200 psi

Note: The allowable combined stress (P_L+P_b+Q) is based on the strain hardening characteristics of this material.

The maximum combined stress (P_L+P_b+Q) is within allowable limits.

Maximum local primary membrane stress (P_L) = 6,490 psi
Allowable local primary membrane (P_L) = +-1.5*S = +-21,600 psi

The maximum local primary membrane stress (P_L) is within allowable limits.

Stresses at the lug edge per WRC Bulletin 107										
Figure	**value**	**β**	**A_u**	**A_l**	**B_u**	**B_l**	**C_u**	**C_l**	**D_u**	**D_l**
3C*	6.227	0.0961	0	0	0	0	0	0	0	0
4C*	6.8235	0.1087	0	0	0	0	0	0	0	0
1C	0.1203	0.11	0	0	0	0	0	0	0	0
2C-1	0.0841	0.11	0	0	0	0	0	0	0	0
3A*	1.2927	0.1044	0	0	0	0	0	0	0	0
1A	0.0929	0.1201	0	0	0	0	0	0	0	0
3B*	3.9969	0.0912	0	0	0	0	0	0	0	0
1B-1	0.0476	0.0958	0	0	0	0	0	0	0	0
Pressure stress*			6,490	6,490	6,490	6,490	6,490	6,490	6,490	6,490
Total circumferential stress			6,490	6,490	6,490	6,490	6,490	6,490	6,490	6,490
Primary membrane circumferential stress*			6,490	6,490	6,490	6,490	6,490	6,490	6,490	6,490
3C*	5.8998	0.1087	0	0	0	0	0	0	0	0
4C*	6.9932	0.0961	0	0	0	0	0	0	0	0
1C-1	0.1298	0.1009	0	0	0	0	0	0	0	0
2C	0.0904	0.1009	0	0	0	0	0	0	0	0
4A*	1.8401	0.1044	0	0	0	0	0	0	0	0
2A	0.0521	0.1103	0	0	0	0	0	0	0	0
4B*	1.0996	0.0912	0	0	0	0	0	0	0	0
2B-1	0.0754	0.0955	0	0	0	0	0	0	0	0
Pressure stress*			3,245	3,245	3,245	3,245	3,245	3,245	3,245	3,245
Total longitudinal stress			3,245	3,245	3,245	3,245	3,245	3,245	3,245	3,245
Primary membrane longitudinal stress*			3,245	3,245	3,245	3,245	3,245	3,245	3,245	3,245
Shear from M_t			0	0	0	0	0	0	0	0

Circ shear from V_c	0	0	0	0	0	0	0	0
Long shear from V_L	0	0	0	0	-4,762	-4,762	4,762	4,762
Total Shear stress	0	0	0	0	-4,762	-4,762	4,762	4,762
Combined stress (P_L+P_b+Q)	6,490	6,490	6,490	6,490	10,062	10,062	10,062	10,062

Note: * denotes primary stress.

Clip #2

Geometry

Height(radial):	1"
Width (circumferential):	1"
Length	0.5"
Fillet Weld Size:	0.25"
Location Angle:	150.00°

Applied Loads

Radial load:	P_r =	0	lb_f
Circumferential moment:	M_c =	0	lb_f-in
Circumferential shear:	V_c =	0	lb_f
Longitudinal moment:	M_L =	0	lb_f-in
Longitudinal shear:	V_L =	1,500	lb_f
Torsion moment:	M_t =	0	lb_f-in
Internal pressure:	P =	165	psi
Mean shell radius:	R_m =	6.2738	in
Shell yield stress:	S_y =	16,000	psi

Maximum stresses due to the applied loads at the lug edge (includes pressure)

$R_m / t = 6.2738 / 0.1575 = 39.8333$

$C_1 = 0.75$, $C_2 = 0.5$ in

Local circumferential pressure stress = P^*R_i/t =6,490 psi

Local longitudinal pressure stress = $P^*R_i/2t$ =3,245 psi

Maximum combined stress (P_L+P_b+Q) = 10,062 psi
Allowable combined stress (P_L+P_b+Q) = +-3*S = +-43,200 psi

Note: The allowable combined stress (P_L+P_b+Q) is based on the strain hardening characteristics of this material.

The maximum combined stress (P_L+P_b+Q) is within allowable limits.

Maximum local primary membrane stress (P_L) = 6,490 psi
Allowable local primary membrane (P_L) = +-1.5*S = +-21,600 psi

The maximum local primary membrane stress (P_L) is within allowable limits.

Stresses at the lug edge per WRC Bulletin 107										
Figure	**value**	**β**	**A_u**	**A_l**	**B_u**	**B_l**	**C_u**	**C_l**	**D_u**	**D_l**
3C*	6.227	0.0961	0	0	0	0	0	0	0	0
4C*	6.8235	0.1087	0	0	0	0	0	0	0	0
1C	0.1203	0.11	0	0	0	0	0	0	0	0
2C-1	0.0841	0.11	0	0	0	0	0	0	0	0
3A*	1.2927	0.1044	0	0	0	0	0	0	0	0
1A	0.0929	0.1201	0	0	0	0	0	0	0	0
3B*	3.9969	0.0912	0	0	0	0	0	0	0	0
1B-1	0.0476	0.0958	0	0	0	0	0	0	0	0
Pressure stress*			6,490	6,490	6,490	6,490	6,490	6,490	6,490	6,490
Total circumferential stress			6,490	6,490	6,490	6,490	6,490	6,490	6,490	6,490
Primary membrane circumferential stress*			6,490	6,490	6,490	6,490	6,490	6,490	6,490	6,490
3C*	5.8998	0.1087	0	0	0	0	0	0	0	0
4C*	6.9932	0.0961	0	0	0	0	0	0	0	0
1C-1	0.1298	0.1009	0	0	0	0	0	0	0	0
2C	0.0904	0.1009	0	0	0	0	0	0	0	0
4A*	1.8401	0.1044	0	0	0	0	0	0	0	0
2A	0.0521	0.1103	0	0	0	0	0	0	0	0
4B*	1.0996	0.0912	0	0	0	0	0	0	0	0
2B-1	0.0754	0.0955	0	0	0	0	0	0	0	0
Pressure stress*			3,245	3,245	3,245	3,245	3,245	3,245	3,245	3,245
Total longitudinal stress			3,245	3,245	3,245	3,245	3,245	3,245	3,245	3,245
Primary membrane longitudinal stress*			3,245	3,245	3,245	3,245	3,245	3,245	3,245	3,245
Shear from M_t			0	0	0	0	0	0	0	0

Circ shear from V_c	0	0	0	0	0	0	0	0
Long shear from V_L	0	0	0	0	-4,762	-4,762	4,762	4,762
Total Shear stress	0	0	0	0	-4,762	-4,762	4,762	4,762
Combined stress (P_L+P_b+Q)	6,490	6,490	6,490	6,490	10,062	10,062	10,062	10,062

Note: * denotes primary stress.

Clip #3

Geometry

Height(radial):	1"
Width (circumferential):	1"
Length	0.5"
Fillet Weld Size:	0.25"
Location Angle:	270.00°

Applied Loads

Radial load:	P_r =	0	lb_f
Circumferential moment:	M_c =	0	lb_f-in
Circumferential shear:	V_c =	0	lb_f
Longitudinal moment:	M_L =	0	lb_f-in
Longitudinal shear:	V_L =	1,500	lb_f
Torsion moment:	M_t =	0	lb_f-in
Internal pressure:	P =	165	psi
Mean shell radius:	R_m =	6.2738	in
Shell yield stress:	S_y =	16,000	psi

Maximum stresses due to the applied loads at the lug edge (includes pressure)

R_m / t = 6.2738 / 0.1575 = 39.8333

C_1 = 0.75, C_2 = 0.5 in

Local circumferential pressure stress = P^*R_i/t =6,490 psi

Local longitudinal pressure stress = $P^*R_i/2t$ =3,245 psi

Maximum combined stress (P_L+P_b+Q) = 10,062 psi
Allowable combined stress (P_L+P_b+Q) = +-3*S = +-43,200 psi

Note: The allowable combined stress (P_L+P_b+Q) is based on the strain hardening characteristics of this material.

The maximum combined stress (P_L+P_b+Q) is within allowable limits.

Maximum local primary membrane stress (P_L) = 6,490 psi
Allowable local primary membrane (P_L) = +-1.5*S = +-21,600 psi

The maximum local primary membrane stress (P_L) is within allowable limits.

Stresses at the lug edge per WRC Bulletin 107										
Figure	**value**	**β**	**A_u**	**A_l**	**B_u**	**B_l**	**C_u**	**C_l**	**D_u**	**D_l**
3C*	6.227	0.0961	0	0	0	0	0	0	0	0
4C*	6.8235	0.1087	0	0	0	0	0	0	0	0
1C	0.1203	0.11	0	0	0	0	0	0	0	0
2C-1	0.0841	0.11	0	0	0	0	0	0	0	0
3A*	1.2927	0.1044	0	0	0	0	0	0	0	0
1A	0.0929	0.1201	0	0	0	0	0	0	0	0
3B*	3.9969	0.0912	0	0	0	0	0	0	0	0
1B-1	0.0476	0.0958	0	0	0	0	0	0	0	0
Pressure stress*			6,490	6,490	6,490	6,490	6,490	6,490	6,490	6,490
Total circumferential stress			6,490	6,490	6,490	6,490	6,490	6,490	6,490	6,490
Primary membrane circumferential stress*			6,490	6,490	6,490	6,490	6,490	6,490	6,490	6,490
3C*	5.8998	0.1087	0	0	0	0	0	0	0	0
4C*	6.9932	0.0961	0	0	0	0	0	0	0	0
1C-1	0.1298	0.1009	0	0	0	0	0	0	0	0
2C	0.0904	0.1009	0	0	0	0	0	0	0	0
4A*	1.8401	0.1044	0	0	0	0	0	0	0	0
2A	0.0521	0.1103	0	0	0	0	0	0	0	0
4B*	1.0996	0.0912	0	0	0	0	0	0	0	0
2B-1	0.0754	0.0955	0	0	0	0	0	0	0	0
Pressure stress*			3,245	3,245	3,245	3,245	3,245	3,245	3,245	3,245
Total longitudinal stress			3,245	3,245	3,245	3,245	3,245	3,245	3,245	3,245
Primary membrane longitudinal stress*			3,245	3,245	3,245	3,245	3,245	3,245	3,245	3,245
Shear from M_t			0	0	0	0	0	0	0	0

Circ shear from V_c	0	0	0	0	0	0	0	0
Long shear from V_L	0	0	0	0	-4,762	-4,762	4,762	4,762
Total Shear stress	0	0	0	0	-4,762	-4,762	4,762	4,762
Combined stress (P_L+P_b+Q)	6,490	6,490	6,490	6,490	10,062	10,062	10,062	10,062

Note: * denotes primary stress.

EDEN CRYOGENICS, LLC

8445 RAUSCH DRIVE

PLAIN CITY, OHIO 43064

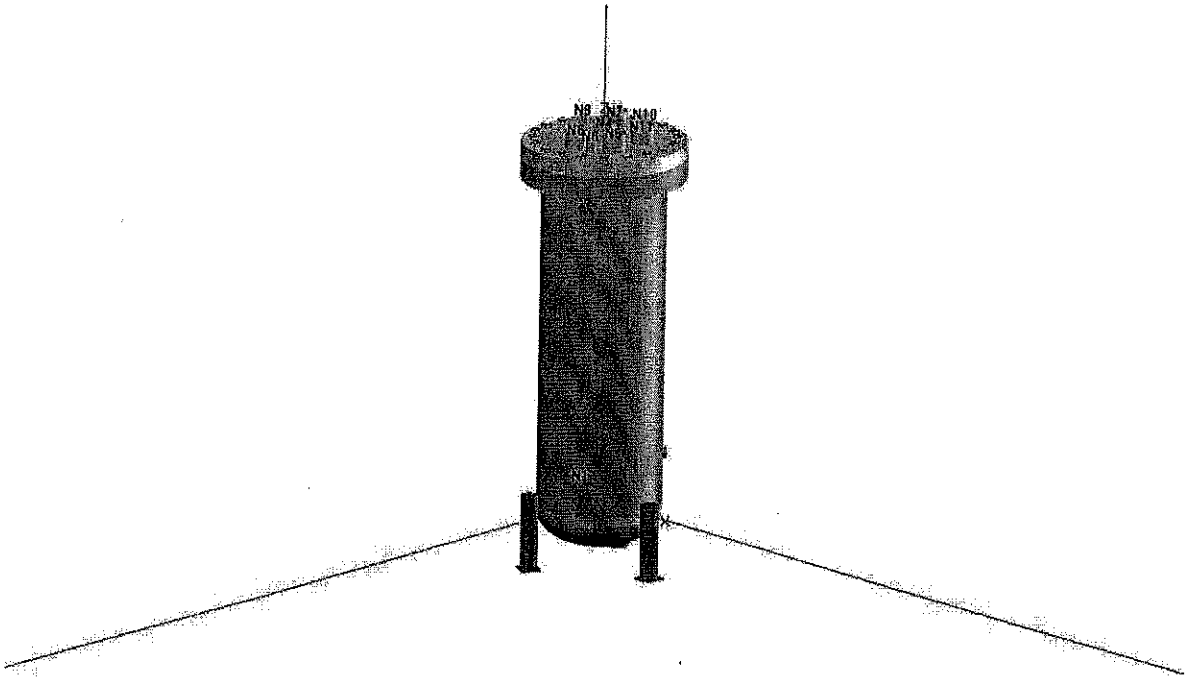

Vessel Design Calculations

Item: VACUUM VESSEL
Vessel No: 2
Customer: FERMI NATIONAL LABORATORY
Contract: BC02128
Designer: ALLAN HANSON
Date: OCTOBER 22, 2009
Location: FERMI NATIONAL LABORATORY
Purchaser: TERRY TOPE
Vessel Name: Vacuum Vessel 12 11 09
Service: VACUUM
P.O. Number: BC02128

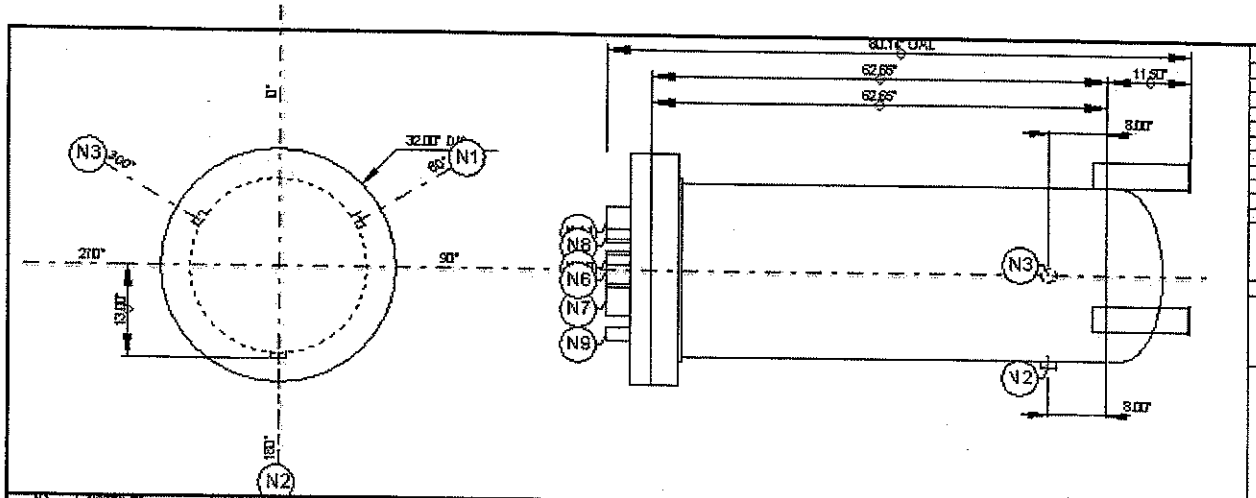

DESIGN DATA

Design Pressure	0 psi
Vacuum Pressure	15 psi
Test Pressure (Stoop)	101.59 psi
Design Temperature	932 °F
MDMT	-320 °F
Corrosion Allowance	0"
Radiography	RT1
PWHT	None

Estimated Weights

Dry: 1,427 lb Oper. 1,427 lb

Materials

Cylinder(s):	SA-312 TP304 Wld & sm ls pipe
Head(s):	SA-312 TP304 Wld & sm ls pipe
Transition (s):	
Support:	

NOZZLE SCHEDULE

MARK	NOZZLE	SIZE & SCH	FLANGE	MARK	NOZZLE	SIZE & SCH	FLANGE
N1	NOZZLE #1	1.75 ID x 0.13					
N11	Copy of Copy of Noz	4" Sch 40S (Std)					
N10	Copy of Copy of Noz	1.75 ID x 0.13					
N9	Copy of Copy of Noz	1.75 ID x 0.13					
N8	Copy of Nozzle #1	1.75 ID x 0.13					
N7	Copy of Copy of Noz	4" Sch 40S (Std)					
N6	Copy of Nozzle #4	2" Sch 40S (Std)					
N5	Copy of Nozzle #4	4" Sch 40S (Std)		N3	Copy of Nozzle #1	1.75 ID x 0.13	
N4	Nozzle #4	2" Sch 40S (Std)		N2	Copy of Nozzle #1	1.75 ID x 0.13	

REVISIONS

REV.	DATE	DESCRIPTION
0	10/21/2009	FOR APPROV

ABC Fabricators Inc.
2600 Washington Blvd.
Dallas, TX, 75204

DWN BY:
CHK BY:
DATE:

General Arrangeme

DWG NO. 145685-1 Rev. 0

Vacuum Vessel 12 11 09.DWG

Deficiencies Summary

Warnings Summary

Warnings for Copy of Copy of Nozzle #1 (N10)
Overlapping limits of reinforcement between nozzles N10 and N7 detected - user intervention may be required. (warning)
Overlapping limits of reinforcement between nozzles N10 and N11 detected - user intervention may be required. (warning)

Warnings for Copy of Copy of Nozzle #1 (N9)
Overlapping limits of reinforcement between nozzles N9 and N7 detected - user intervention may be required. (warning)

Warnings for Copy of Copy of Nozzle #4 (N11)
Overlapping limits of reinforcement between nozzles N11 and N4 detected - user intervention may be required. (warning)
Overlapping limits of reinforcement between nozzles N11 and N5 detected - user intervention may be required. (warning)
Overlapping limits of reinforcement between nozzles N11 and N10 detected - user intervention may be required. (warning)

Warnings for Copy of Copy of Nozzle #4 (N7)
Overlapping limits of reinforcement between nozzles N7 and N4 detected - user intervention may be required. (warning)
Overlapping limits of reinforcement between nozzles N7 and N9 detected - user intervention may be required. (warning)
Overlapping limits of reinforcement between nozzles N7 and N10 detected - user intervention may be required. (warning)

Warnings for Copy of Nozzle #1 (N8)
Overlapping limits of reinforcement between nozzles N8 and N5 detected - user intervention may be required. (warning)
Overlapping limits of reinforcement between nozzles N8 and N6 detected - user intervention may be required. (warning)

Warnings for Copy of Nozzle #4 (N5)
Overlapping limits of reinforcement between nozzles N5 and N4 detected - user intervention may be required. (warning)
Overlapping limits of reinforcement between nozzles N5 and N6 detected - user intervention may be required. (warning)
Overlapping limits of reinforcement between nozzles N5 and N8 detected - user intervention may be required. (warning)
Overlapping limits of reinforcement between nozzles N5 and N11 detected - user intervention may be required. (warning)

Warnings for Copy of Nozzle #4 (N6)
Overlapping limits of reinforcement between nozzles N6 and N4 detected - user intervention may be required. (warning)
Overlapping limits of reinforcement between nozzles N6 and N5 detected - user intervention may be required. (warning)
Overlapping limits of reinforcement between nozzles N6 and N8 detected - user intervention may be required. (warning)

Warnings for Nozzle #4 (N4)
Overlapping limits of reinforcement between nozzles N4 and N5 detected - user intervention may be required. (warning)

Overlapping limits of reinforcement between nozzles N4 and N6 detected - user intervention may be required. (warning)
Overlapping limits of reinforcement between nozzles N4 and N7 detected - user intervention may be required. (warning)
Overlapping limits of reinforcement between nozzles N4 and N11 detected - user intervention may be required. (warning)

Nozzle Schedule

Nozzle mark	Service	Size	Materials								
			Nozzle	Impact	Norm	Fine Grain	Pad	Impact	Norm	Fine Grain	Flange
N1	Nozzle #1	1.75 IDx0.13	SA-240 304L	No	No	No	N/A	N/A	N/A	N/A	N/A
N10	Copy of Copy of Nozzle #1	1.73 IDx0.13	SA-240 304L	No	No	No	N/A	N/A	N/A	N/A	N/A
N11	Copy of Copy of Nozzle #4	4" Sch 40S (Std)	SA-312 TP304 Wld & smls pipe	No	No	No	N/A	N/A	N/A	N/A	N/A
N2	Copy of Nozzle #1	1.75 IDx0.13	SA-240 304L	No	No	No	N/A	N/A	N/A	N/A	N/A
N3	Copy of Nozzle #1	1.75 IDx0.13	SA-240 304L	No	No	No	N/A	N/A	N/A	N/A	N/A
N4	Nozzle #4	4" Sch 40S (Std)	SA-312 TP304 Wld & smls pipe	No	No	No	N/A	N/A	N/A	N/A	N/A
N5	Copy of Nozzle #4	4" Sch 40S (Std)	SA-312 TP304 Wld & smls pipe	No	No	No	N/A	N/A	N/A	N/A	N/A
N6	Copy of Nozzle #4	4" Sch 40S (Std)	SA-312 TP304 Wld & smls pipe	No	No	No	N/A	N/A	N/A	N/A	N/A
N7	Copy of Copy of Nozzle #4	4" Sch 40S (Std)	SA-312 TP304 Wld & smls pipe	No	No	No	N/A	N/A	N/A	N/A	N/A
N8	Copy of Nozzle #1	1.73 IDx0.13	SA-240 304L	No	No	No	N/A	N/A	N/A	N/A	N/A
N9	Copy of Copy of Nozzle #1	1.73 IDx0.13	SA-240 304L	No	No	No	N/A	N/A	N/A	N/A	N/A

Nozzle Summary

Nozzle mark	OD (in)	t_n (in)	Req t_n (in)	A_1?	A_2?	Shell			Reinforcement Pad		Corr (in)	A_a/A_r (%)
						Nom t (in)	Design t (in)	User t (in)	Width (in)	t_{pad} (in)		
N1	2	0.125	0.0625	Yes	Yes	0.25	0.2017		N/A	N/A	0	100.0
N10	2	0.1347	0.1347	Yes	Yes	2.75*	2.4015		N/A	N/A	0	100.0
N11	4.5	0.237	0.237	Yes	Yes	2.75*	2.0862		N/A	N/A	0	100.0
N2	2	0.125	0.0625	Yes	Yes	0.25	0.2017		N/A	N/A	0	100.0
N3	2	0.125	0.0625	Yes	Yes	0.25	0.2017		N/A	N/A	0	100.0
N4	4.5	0.237	0.237	Yes	Yes	2.75*	2.0862		N/A	N/A	0	100.0
N5	4.5	0.237	0.237	Yes	Yes	2.75*	2.0862		N/A	N/A	0	100.0
N6	4.5	0.237	0.237	Yes	Yes	2.75*	2.0862		N/A	N/A	0	100.0
N7	4.5	0.237	0.237	Yes	Yes	2.75*	2.0862		N/A	N/A	0	100.0
N8	2	0.1347	0.1347	Yes	Yes	2.75*	2.4015		N/A	N/A	0	100.0
N9	2	0.1347	0.1347	Yes	Yes	2.75*	2.4015		N/A	N/A	0	100.0

t_n: Nozzle thickness
Req t_n: Nozzle thickness required per UG-45/UG-16
Nom t: Vessel wall thickness
Design t: Required vessel wall thickness due to pressure + corrosion allowance per UG-37
User t: Local vessel wall thickness (near opening)
A_a: Area available per UG-37, governing condition
A_r: Area required per UG-37, governing condition
Corr: Corrosion allowance on nozzle wall
* Head minimum thickness after forming

Pressure Summary for Chamber bounded by Bottom Ellipsoidal Head and Bolted Cover #1

Identifier	P Design (psi)	T Design (°F)	MAWP (psi)	MAP (psi)	MAEP (psi)	T_e external (°F)	MDMT (°F)	MDMT Exemption	Impact Tested
Bolted Cover #1	0	932	295.38	465.37	631.83	100	-320	Note 1	No
Vacuum Vessel Shell	0	932	265.12	368.23	69.13	100	-320	Note 1	No
Straight Flange on Bottom Ellipsoidal Head	0	932	265.12	368.23	69.13	100	-320	Note 1	No
Bottom Ellipsoidal Head	0	932	229.42	318.64	82.82	100	-320	Note 2	No
Legs #1	0	932	0	N/A	N/A	N/A	N/A	N/A	N/A
Flange #1	0	932	235.89	542.88	2,046.96	100	-320	Note 1	No
Nozzle #1 (N1)	0	932	N/A	N/A	56.26	100	N/A	N/A	No
Copy of Copy of Nozzle #1 (N10)	0	932	N/A	N/A	481.85	100	N/A	N/A	No
Copy of Copy of Nozzle #4 (N11)	0	932	N/A	N/A	363.62	100	N/A	N/A	No
Copy of Nozzle #1 (N2)	0	932	N/A	N/A	56.26	100	N/A	N/A	No
Copy of Nozzle #1 (N3)	0	932	N/A	N/A	56.26	100	N/A	N/A	No
Nozzle #4 (N4)	0	932	N/A	N/A	363.62	100	N/A	N/A	No
Copy of Nozzle #4 (N5)	0	932	N/A	N/A	363.62	100	N/A	N/A	No
Copy of Nozzle #4 (N6)	0	932	N/A	N/A	363.62	100	N/A	N/A	No
Copy of Copy of Nozzle #4 (N7)	0	932	N/A	N/A	363.62	100	N/A	N/A	No
Copy of Nozzle #1 (N8)	0	932	N/A	N/A	481.85	100	N/A	N/A	No
Copy of Copy of Nozzle #1 (N9)	0	932	N/A	N/A	481.85	100	N/A	N/A	No

Chamber design MDMT is -320 °F
Chamber rated MDMT is -320 °F @ 0 psi

Chamber MAWP hot & corroded is 0 psi @ 932 °F

Chamber MAP cold & new is 318.64 psi @ 70 °F

Chamber MAEP is 56.26 psi @ 100 °F
Vacuum rings did not govern the external pressure rating.

Notes for MDMT Rating:

Note #	Exemption	Details
1.	Rated MDMT per UHA-51(d)(1)(a) = -320 °F	
2.	Material Rated MDMT per UHA-51(d)(1)(a) = -320 °F	

Design notes are available on the Settings Summary page.

Revision History

No.	Date	Operator	Notes
0	10/21/2009	ahanson	New vessel created ASME Section VIII Division 1 [Build 6263]

Settings Summary

COMPRESS Build 6263

Units: U.S. Customary

Datum Line Location: 0.00" from bottom seam

Design

ASME Section VIII Division 1, 2007 Edition, A08 Addenda

Design or Rating:	Get Thickness from Pressure
Minimum thickness:	0.0625" per UG-16(b)
Design for cold shut down only:	No
Design for lethal service (full radiography required):	No
Design nozzles for:	Design P, find nozzle MAWP and MAP
Corrosion weight loss:	100% of theoretical loss
UG-23 Stress Increase:	1.20
Skirt/legs stress increase:	1.0
Minimum nozzle projection:	1"
Juncture calculations for $\alpha > 30$ only:	Yes
Preheat P-No 1 Materials > 1.25&#34 and <= 1.50" thick:	No
UG-37(a) shell tr calculation considers longitudinal stress:	No

Butt welds are tapered per Figure UCS-66.3(a).

Hydro/Pneumatic Test

Shop Hydrotest Pressure:	1.3 times vessel MAWP
Test liquid specific gravity:	1.00
Maximum stress during test:	90% of yield

Required Marking - UG-116

UG-116 (e) Radiography:	RT1
UG-116 (f) Postweld heat treatment:	None

Code Cases\Interpretations

Use Code Case 2547:	No
Apply interpretation VIII-1-83-66:	Yes
Apply interpretation VIII-1-86-175:	Yes
Apply interpretation VIII-1-83-115:	Yes
Apply interpretation VIII-1-01-37:	Yes
No UCS-66.1 MDMT reduction:	No
No UCS-68(c) MDMT reduction:	No
Disallow UG-20(f) exemptions:	No

UG-22 Loadings

UG-22 (a) Internal or External Design Pressure :	Yes
UG-22 (b) Weight of the vessel and normal contents under operating or test conditions:	Yes
UG-22 (c) Superimposed static reactions from weight of attached equipment (external loads):	No
UG-22 (d)(2) Vessel supports such as lugs, rings, skirts, saddles and legs:	Yes
UG-22 (f) Wind reactions:	No
UG-22 (f) Seismic reactions:	No

Note: UG-22 (b),(c) and (f) loads only considered when supports are present.

Thickness Summary

Component Identifier	Material	Diameter (in)	Length (in)	Nominal t (in)	Design t (in)	Total Corrosion (in)	Joint E	Load
Bolted Cover #1	SA-240 304L	32 OD	2.75	2.75*	1.3744	0	1.00	External
Vacuum Vessel Shell	SA-312 TP304 Wld & smls pipe	23.5 ID	62.22	0.25	0.1192	0	1.00	External
Straight Flange on Bottom Ellipsoidal Head	SA-312 TP304 Wld & smls pipe	23.5 ID	1.5	0.25	0.1192	0	1.00	External
Bottom Ellipsoidal Head	SA-312 TP304 Wld & smls pipe	23.5 ID	6.0625	0.1875*	0.0619	0	1.00	External

Nominal t: Vessel wall nominal thickness

Design t: Required vessel thickness due to governing loading + corrosion

Joint E: Longitudinal seam joint efficiency

* Head minimum thickness after forming

Load

internal: Circumferential stress due to internal pressure governs

external: External pressure governs

Wind: Combined longitudinal stress of pressure + weight + wind governs

Seismic: Combined longitudinal stress of pressure + weight + seismic governs

Weight Summary

Component	Weight (lb) Contributed by Vessel Elements							Surface Area ft2
	Metal New*	Metal Corroded*	Insulation & Supports	Lining	Piping + Liquid	Operating Liquid	Test Liquid	
Bolted Cover #1	570.5	570.5	0	0	0	0	8.3	7
Vacuum Vessel Shell	335.9	335.9	0	0	0	0	981.1	33
Bottom Ellipsoidal Head	43.4	43.4	0	0	0	0	84.8	6
Legs #1	30.7	30.7	0	0	0	0	0	4
TOTAL:	**980.4**	**980.4**	**0**	**0**	**0**	**0**	**1,074.2**	**49**

* Shells with attached nozzles have weight reduced by material cut out for opening.

Component	Weight (lb) Contributed by Attachments									Surface Area ft2
	Body Flanges		Nozzles & Flanges		Packed Beds	Ladders & Platforms	Trays & Supports	Rings & Clips	Vertical Loads	
	New	Corroded	New	Corroded						
Bolted Cover #1	0	0	31.7	31.7	0	0	0	0	0	2
Vacuum Vessel Shell	413.3	413.3	1.5	1.5	0	0	0	0	0	10
Bottom Ellipsoidal Head	0	0	0	0	0	0	0	0	0	0
Legs #1	0	0	0	0	0	0	0	0	0	0
TOTAL:	**413.3**	**413.3**	**33.2**	**33.2**	**0**	**0**	**0**	**0**	**0**	**2**

Vessel operating weight, Corroded: 1,427 lb
Vessel operating weight, New: 1,427 lb
Vessel empty weight, Corroded: 1,427 lb
Vessel empty weight, New: 1,427 lb
Vessel test weight, New: 2,501 lb
Vessel surface area: 51 ft^2

Vessel center of gravity location - from datum - lift condition

Vessel Lift Weight, New: 1,427 lb
Center of Gravity: 51.6114"

Vessel Capacity

Vessel Capacity** (New): 127 US gal
Vessel Capacity** (Corroded): 127 US gal
**The vessel capacity does not include volume of nozzle, piping or other attachments.

Shop test pressure determination for Chamber bounded by Bottom Ellipsoidal Head and Bolted Cover #1 based on MAWP per UG-99(b)

Shop hydrostatic test gauge pressure is 101.59 psi at 70 °F (the chamber MAEP = 56.265 psi). External pressure governs the test pressure per UG-99(f).

The shop test is performed with the vessel in the horizontal position.

Identifier	Local test pressure psi	Test liquid static head psi	UG-99 stress ratio	UG-99 pressure factor	Stress during test psi	Allowable test stress psi	Stress excessive?
Vacuum Vessel Shell (1)	102.438	0.848	1.3889	1.30	5,553	27,000	No
Straight Flange on Bottom Ellipsoidal Head	102.438	0.848	1.3889	1.30	5,553	27,000	No
Bottom Ellipsoidal Head	102.438	0.848	1.3889	1.30	5,778	27,000	No
Bolted Cover #1	102.438	0.848	1.5755	1.30	3,676	33,750	No
Flange #1	102.438	0.848	1.5755	1.30	6,302	33,750	No
Copy of Copy of Nozzle #1 (N10)	101.986	0.396	1.5755	1.30	NI	NI	NI
Copy of Copy of Nozzle #1 (N9)	102.368	0.778	1.5755	1.30	NI	NI	NI
Copy of Copy of Nozzle #4 (N11)	101.851	0.261	1.3889	1.30	NI	NI	NI
Copy of Copy of Nozzle #4 (N7)	102.231	0.641	1.3889	1.30	NI	NI	NI
Copy of Nozzle #1 (N2)	102.484	0.893	1.5755	1.30	7,699	33,750	No
Copy of Nozzle #1 (N3)	101.825	0.235	1.5755	1.30	7,649	33,750	No
Copy of Nozzle #1 (N8)	101.874	0.284	1.5755	1.30	NI	NI	NI
Copy of Nozzle #4 (N5)	101.851	0.261	1.3889	1.30	NI	NI	NI
Copy of Nozzle #4 (N6)	102.087	0.497	1.3889	1.30	NI	NI	NI
Nozzle #1 (N1)	101.825	0.235	1.5755	1.30	7,649	33,750	No
Nozzle #4 (N4)	102.087	0.497	1.3889	1.30	NI	NI	NI

Notes:
(1) Vacuum Vessel Shell limits the UG-99 stress ratio.
(2) NI indicates that test stress was not investigated.
(3) P_L stresses at nozzle openings have been estimated using the method described in PVP-Vol. 399, pages 77-82.
(4) VIII-2, AD-151.1(b) used as the basis for nozzle allowable test stress.
(5) The zero degree angular position is assumed to be up, and the test liquid height is assumed to the top-most flange.

The field test condition has not been investigated for the Chamber bounded by Bottom Ellipsoidal Head and Bolted Cover #1.

Vacuum Summary

Component	Line of Support	Elevation above Datum (in)	Length Le (in)
Bolted Cover #1	-	65.395	N/A
-	1/3 depth of Bolted Cover #1	62.645	N/A
Vacuum Vessel Shell Top	-	62.22	66.1033
Vacuum Vessel Shell Bottom	-	0	66.1033
Straight Flange on Bottom Ellipsoidal Head Top	-	0	66.1033
Straight Flange on Bottom Ellipsoidal Head Bottom	-	-1.5	66.1033
-	1/3 depth of Bottom Ellipsoidal Head	-3.4583	N/A
Bottom Ellipsoidal Head	-	-7.5625	N/A

Note
For main components, the listed value of 'Le' is the largest unsupported length for the component.

Vacuum Vessel Shell

ASME Section VIII Division 1, 2007 Edition, A08 Addenda

Component:	Cylinder
Material specification:	SA-312 TP304 Wld & smls pipe (II-D p. 90, ln. 15)
Pipe NPS and Schedule:	24" Sch 10S
Rated MDMT per UHA-51(d)(1)(a) = -320 °F	

Internal design pressure: P = 0 psi @ 932 °F
External design pressure: P_e = 15 psi @ 100 °F

Static liquid head:

P_{th} = 0.85 psi (SG = 1, H_s = 23.5", Horizontal test head)

Corrosion allowance Inner C = 0" Outer C = 0"

Design MDMT = -320 °F
Rated MDMT = -320 °F

No impact test performed
Material is not normalized
Material is not produced to Fine Grain Practice
PWHT is not performed

Radiography:		
	Longitudinal joint -	Full UW-11(a) Type 1
	Top circumferential joint -	N/A
	Bottom circumferential joint -	Full UW-11(a) Type 1

Estimated weight	New = 336.6 lb	corr = 336.6 lb
Capacity	New = 116.83 US gal	corr = 116.83 US gal

ID = 23.5"
Length L_c = 62.22"
t = 0.25"

Maximum allowable working pressure, (at 932 °F) UG-27(c)(1)

$$P = S*E*t / (R + 0.60*t) - P_s$$
$$= 14{,}400*1.00*0.2188 / (11.75 + 0.60*0.2188) - 0$$
$$= 265.12 \text{ psi}$$

Maximum allowable pressure, (at 70 °F) UG-27(c)(1)

$$P = S*E*t / (R + 0.60*t)$$
$$= 20{,}000*1.00*0.2188 / (11.75 + 0.60*0.2188)$$
$$= 368.23 \text{ psi}$$

External Pressure, (Corroded & at 100 °F) UG-28(c)

L / D_o = 66.1033 / 24 = 2.7543
D_o / t = 24 / 0.1192 = 201.3703
From table G: A = 0.000161
From table HA-1: B = 2,265 psi

$$P_a = 4*B / (3*(D_o / t))$$
$$= 4*2265.4226 / (3*(24 / 0.1192))$$

= 15 psi

Design thickness for external pressure P_a = 15 psi

t_a = t + Corrosion = 0.1192 + 0 = 0.1192"

Maximum Allowable External Pressure, (Corroded & at 100 °F) UG-28(c)

L / D_o = 66.1033 / 24 = 2.7543
D_o / t = 24 / 0.2188 = 109.7143
From table G: A = 0.000405
From table HA-1: B = 5,689 psi

P_a = 4*B / (3*(D_o / t))
= 4*5688.6738 / (3*(24 / 0.2188))
= 69.13 psi

External Pressure + Weight Check (Bergman, ASME paper 54-A-104)

P_v = W / (2*π*R_m) + M / (π*R_m^2)
= 1,419.1 / (2*π*11.875) + 47 / (π*11.875^2)
= 19.1252 lb/in

α = P_v / (P_e*D_o)
= 19.1252 / (15*24)
= 0.0531

n = 3

m = 1.23 / $(L / D_o)^2$
= 1.23 / $(66.1033 / 24)^2$
= 0.1621

Ratio P_e = (n^2 - 1 + m + m*α) / (n^2 - 1 + m)
= (3^2 - 1 + 0.1621 + 0.1621*0.0531) / (3^2 - 1 + 0.1621)
= 1.0011

Ratio P_e * P_a ≤ MAEP design cylinder thickness is satisfactory.

External Pressure + Weight Check at Bottom Seam (Bergman, ASME paper 54-A-104)

P_v = W / (2*π*R_m) + M / (π*R_m^2)
= 1,419.1 / (2*π*11.875) + 0 / (π*11.875^2)
= 19.0195 lb/in

α = P_v / (P_e*D_o)
= 19.0195 / (15*24)
= 0.0528

n = 3

m = 1.23 / $(L / D_o)^2$
= 1.23 / $(66.1033 / 24)^2$
= 0.1621

Ratio P_e = (n^2 - 1 + m + m*α) / (n^2 - 1 + m)

$= (3^2 - 1 + 0.1621 + 0.1621*0.0528) / (3^2 - 1 + 0.1621)$

$= 1.0010$

Ratio $P_e * P_e \leq$ MAEP design cylinder thickness is satisfactory.

Design thickness = 0.1192"

The governing condition is due to external pressure.

The cylinder thickness of 0.25" is adequate.

Thickness Required Due to Pressure + External Loads

Condition	Pressure P (psi)	Allowable Stress Before UG-23 Stress Increase (psi)		Temperature (°F)	Corrosion C (in)	Location	Load	Req'd Thk Due to Tension (in)	Req'd Thk Due to Compression (in)
		S_t	S_c						
Operating, Hot & Corroded	0	14,400	5,750	932	0	Top	Weight	0.0033	0.0033
						Bottom	Weight	0.0033	0.0033
Operating, Hot & New	0	14,400	5,750	932	0	Top	Weight	0.0033	0.0033
						Bottom	Weight	0.0033	0.0033
Hot Shut Down, Corroded	0	14,400	5,750	932	0	Top	Weight	0.0033	0.0033
						Bottom	Weight	0.0033	0.0033
Hot Shut Down, New	0	14,400	5,750	932	0	Top	Weight	0.0033	0.0033
						Bottom	Weight	0.0033	0.0033
Empty, Corroded	0	20,000	11,813	70	0	Top	Weight	0.0016	0.0016
						Bottom	Weight	0.0016	0.0016
Empty, New	0	20,000	11,813	70	0	Top	Weight	0.0016	0.0016
						Bottom	Weight	0.0016	0.0016
Vacuum	-15	20,000	11,813	100	0	Top	Weight	0.0091	0.0091
						Bottom	Weight	0.0091	0.0091
Hot Shut Down, Corroded, Weight & Eccentric Moments Only	0	14,400	5,750	932	0	Top	Weight	0.0033	0.0033
						Bottom	Weight	0.0033	0.0033

Allowable Compressive Stress, Hot and Corroded- S_{cHC}, (table HA-1)

A = $0.125 / (R_o / t)$

= $0.125 / (12 / 0.2188)$

= 0.002279

B = 5,750 psi

S = 14,400 / 1.00 = 14,400 psi

S_{cHC} = min(B, S) = 5,750 psi

Allowable Compressive Stress, Hot and New- S_{cHN}

S_{cHN} = S_{cHC}

= 5,750 psi

Allowable Compressive Stress, Cold and New- S_{cCN}, (table HA-1)

A = 0.125 / (R_o / t)
= 0.125 / (12 / 0.2188)
= 0.002279

B = 11,813 psi

S = 20,000 / 1.00 = 20,000 psi

S_{cCN} = min(B, S) = <u>11,813 psi</u>

Allowable Compressive Stress, Cold and Corroded- S_{cCC}

S_{cCC} = S_{cCN}
= <u>11,813 psi</u>

Allowable Compressive Stress, Vacuum and Corroded- S_{cVC}, (table HA-1)

A = 0.125 / (R_o / t)
= 0.125 / (12 / 0.2188)
= 0.002279

B = 11,813 psi

S = 20,000 / 1.00 = 20,000 psi

S_{cVC} = min(B, S) = <u>11,813 psi</u>

<u>Operating, Hot & Corroded, Above Support Point</u>

t_p = P*R / (2*S_c*K_s + 0.40*|P|) (Pressure)
= 0*11.75 / (2*5,750.24*1.00 + 0.40*|0|)
= 0"

t_m = M / (π*R_m^2*S_c*K_s) (bending)
= 47 / (π*11.875²*5,750.24*1.00)
= 0"

t_w = W / (2*π*R_m*S_c*K_s) (Weight)
= 1,419.1 / (2*π*11.875*5,750.24*1.00)
= 0.0033"

t_t = |t_p + t_m - t_w| (total, net compressive)
= |0 + 0 - (0.0033)|
= <u>0.0033"</u>

t_c = t_{mc} + t_{wc} - t_{pc} (total required, compressive)
= 0 + (0.0033) - (0)
= <u>0.0033"</u>

Maximum allowable working pressure, Longitudinal Stress

P = 2*S_t*K_s*E_c*(t - t_m + t_w) / (R - 0.40*(t - t_m + t_w))
= 2*14,400*1.00*1.00*(0.2188 - 0 + (0.0013)) / (11.75 - 0.40*(0.2188 - 0 + (0.0013)))
= 543.46 psi

Operating, Hot & New, Above Support Point

$t_p = P*R / (2*S_c*K_s + 0.40*|P|)$ (Pressure)
$= 0*11.75 / (2*5,750.24*1.00 + 0.40*|0|)$
$= 0"$

$t_m = M / (\pi*R_m^2*S_c*K_s)$ (bending)
$= 47 / (\pi*11.875^2*5,750.24*1.00)$
$= 0"$

$t_w = W / (2*\pi*R_m*S_c*K_s)$ (Weight)
$= 1,419.1 / (2*\pi*11.875*5,750.24*1.00)$
$= 0.0033"$

$t_t = |t_p + t_m - t_w|$ (total, net compressive)
$= |0 + 0 - (0.0033)|$
$= \underline{0.0033"}$

$t_c = t_{mc} + t_{wc} - t_{pc}$ (total required, compressive)
$= 0 + (0.0033) - (0)$
$= \underline{0.0033"}$

Maximum allowable working pressure, Longitudinal Stress

$P = 2*S_t*K_s*E_c*(t - t_m + t_w) / (R - 0.40*(t - t_m + t_w))$
$= 2*14,400*1.00*1.00*(0.2188 - 0 + (0.0013)) / (11.75 - 0.40*(0.2188 - 0 + (0.0013)))$
$= 543.46$ psi

Hot Shut Down, Corroded, Above Support Point

$t_p = 0"$ (Pressure)
$t_m = M / (\pi*R_m^2*S_c*K_s)$ (bending)
$= 47 / (\pi*11.875^2*5,750.24*1.00)$
$= 0"$

$t_w = W / (2*\pi*R_m*S_c*K_s)$ (Weight)
$= 1,419.1 / (2*\pi*11.875*5,750.24*1.00)$
$= 0.0033"$

$t_t = |t_p + t_m - t_w|$ (total, net compressive)
$= |0 + 0 - (0.0033)|$
$= \underline{0.0033"}$

$t_c = t_{mc} + t_{wc} - t_{pc}$ (total required, compressive)
$= 0 + (0.0033) - (0)$
$= \underline{0.0033"}$

Hot Shut Down, New, Above Support Point

$t_p = 0"$ (Pressure)
$t_m = M / (\pi*R_m^2*S_c*K_s)$ (bending)
$= 47 / (\pi*11.875^2*5,750.24*1.00)$
$= 0"$

$t_w = W / (2*\pi*R_m*S_c*K_s)$ (Weight)
$= 1{,}419.1 / (2*\pi*11.875*5{,}750.24*1.00)$
$= 0.0033"$

$t_t = |t_p + t_m - t_w|$ (total, net compressive)
$= |0 + 0 - (0.0033)|$
$= \underline{0.0033"}$

$t_c = t_{mc} + t_{wc} - t_{pc}$ (total required, compressive)
$= 0 + (0.0033) - (0)$
$= \underline{0.0033"}$

Empty, Corroded, Above Support Point

$t_p = 0"$ (Pressure)
$t_m = M / (\pi*R_m^2*S_c*K_s)$ (bending)
$= 47 / (\pi*11.875^2*11{,}812.64*1.00)$
$= 0"$

$t_w = W / (2*\pi*R_m*S_c*K_s)$ (Weight)
$= 1{,}419.1 / (2*\pi*11.875*11{,}812.64*1.00)$
$= 0.0016"$

$t_t = |t_p + t_m - t_w|$ (total, net compressive)
$= |0 + 0 - (0.0016)|$
$= \underline{0.0016"}$

$t_c = t_{mc} + t_{wc} - t_{pc}$ (total required, compressive)
$= 0 + (0.0016) - (0)$
$= \underline{0.0016"}$

Empty, New, Above Support Point

$t_p = 0"$ (Pressure)
$t_m = M / (\pi*R_m^2*S_c*K_s)$ (bending)
$= 47 / (\pi*11.875^2*11{,}812.64*1.00)$
$= 0"$

$t_w = W / (2*\pi*R_m*S_c*K_s)$ (Weight)
$= 1{,}419.1 / (2*\pi*11.875*11{,}812.64*1.00)$
$= 0.0016"$

$t_t = |t_p + t_m - t_w|$ (total, net compressive)
$= |0 + 0 - (0.0016)|$
$= \underline{0.0016"}$

$t_c = t_{mc} + t_{wc} - t_{pc}$ (total required, compressive)
$= 0 + (0.0016) - (0)$
$= \underline{0.0016"}$

Vacuum, Above Support Point

$t_p = P*R / (2*S_c*K_s + 0.40*|P|)$ (Pressure)
$= -15*11.75 / (2*11{,}812.64*1.00 + 0.40*|15|)$

$= -0.0075"$

$t_m = M / (\pi * R_m^2 * S_c * K_s)$ (bending)
$= 47 / (\pi * 11.875^2 * 11{,}812.64 * 1.00)$
$= 0"$

$t_w = W / (2 * \pi * R_m * S_c * K_s)$ (Weight)
$= 1{,}419.1 / (2 * \pi * 11.875 * 11{,}812.64 * 1.00)$
$= 0.0016"$

$t_t = |t_p + t_m - t_w|$ (total, net compressive)
$= |-0.0075 + 0 - (0.0016)|$
$= \underline{0.0091"}$

$t_c = t_{mc} + t_{wc} - t_{pc}$ (total required, compressive)
$= 0 + (0.0016) - (-0.0075)$
$= \underline{0.0091"}$

Hot Shut Down, Corroded, Weight & Eccentric Moments Only, Above Support Point

$t_p = 0"$ (Pressure)
$t_m = M / (\pi * R_m^2 * S_c * K_s)$ (bending)
$= 47 / (\pi * 11.875^2 * 5{,}750.24 * 1.00)$
$= 0"$

$t_w = W / (2 * \pi * R_m * S_c * K_s)$ (Weight)
$= 1{,}419.1 / (2 * \pi * 11.875 * 5{,}750.24 * 1.00)$
$= 0.0033"$

$t_t = |t_p + t_m - t_w|$ (total, net compressive)
$= |0 + 0 - (0.0033)|$
$= \underline{0.0033"}$

$t_c = t_{mc} + t_{wc} - t_{pc}$ (total required, compressive)
$= 0 + (0.0033) - (0)$
$= \underline{0.0033"}$

Operating, Hot & Corroded, Below Support Point

$t_p = P * R / (2 * S_c * K_s + 0.40 * |P|)$ (Pressure)
$= 0 * 11.75 / (2 * 5{,}750.24 * 1.00 + 0.40 * |0|)$
$= 0"$

$t_m = M / (\pi * R_m^2 * S_c * K_s)$ (bending)
$= 0 / (\pi * 11.875^2 * 5{,}750.24 * 1.00)$
$= 0"$

$t_w = W / (2 * \pi * R_m * S_c * K_s)$ (Weight)
$= 1{,}419.1 / (2 * \pi * 11.875 * 5{,}750.24 * 1.00)$
$= 0.0033"$

$t_t = |t_p + t_m - t_w|$ (total, net compressive)
$= |0 + 0 - (0.0033)|$
$= \underline{0.0033"}$

$t_c = t_{mc} + t_{wc} - t_{pc}$ (total required, compressive)

$= 0 + (0.0033) - (0)$
$= \underline{0.0033"}$

Maximum allowable working pressure, Longitudinal Stress

$P = 2*S_t*K_s*E_c*(t - t_m + t_w) / (R - 0.40*(t - t_m + t_w))$
$= 2*14{,}400*1.00*1.00*(0.2188 - 0 + (0.0013)) / (11.75 - 0.40*(0.2188 - 0 + (0.0013)))$
$= 543.48$ psi

Operating, Hot & New, Below Support Point

$t_p = P*R / (2*S_c*K_s + 0.40*|P|)$ (Pressure)
$= 0*11.75 / (2*5{,}750.24*1.00 + 0.40*|0|)$
$= 0"$

$t_m = M / (\pi*R_m^2*S_c*K_s)$ (bending)
$= 0 / (\pi*11.875^2*5{,}750.24*1.00)$
$= 0"$

$t_w = W / (2*\pi*R_m*S_c*K_s)$ (Weight)
$= 1{,}419.1 / (2*\pi*11.875*5{,}750.24*1.00)$
$= 0.0033"$

$t_t = |t_p + t_m - t_w|$ (total, net compressive)
$= |0 + 0 - (0.0033)|$
$= \underline{0.0033"}$

$t_c = t_{mc} + t_{wc} - t_{pc}$ (total required, compressive)
$= 0 + (0.0033) - (0)$
$= \underline{0.0033"}$

Maximum allowable working pressure, Longitudinal Stress

$P = 2*S_t*K_s*E_c*(t - t_m + t_w) / (R - 0.40*(t - t_m + t_w))$
$= 2*14{,}400*1.00*1.00*(0.2188 - 0 + (0.0013)) / (11.75 - 0.40*(0.2188 - 0 + (0.0013)))$
$= 543.48$ psi

Hot Shut Down, Corroded, Below Support Point

$t_p = 0"$ (Pressure)
$t_m = M / (\pi*R_m^2*S_c*K_s)$ (bending)
$= 0 / (\pi*11.875^2*5{,}750.24*1.00)$
$= 0"$

$t_w = W / (2*\pi*R_m*S_c*K_s)$ (Weight)
$= 1{,}419.1 / (2*\pi*11.875*5{,}750.24*1.00)$
$= 0.0033"$

$t_t = |t_p + t_m - t_w|$ (total, net compressive)
$= |0 + 0 - (0.0033)|$
$= \underline{0.0033"}$

$t_c = t_{mc} + t_{wc} - t_{pc}$ (total required, compressive)
$= 0 + (0.0033) - (0)$

$= \underline{0.0033"}$

Hot Shut Down, New, Below Support Point

$t_p = 0"$ (Pressure)

$t_m = M / (\pi * R_m^2 * S_c * K_s)$ (bending)

$= 0 / (\pi * 11.875^2 * 5{,}750.24 * 1.00)$

$= 0"$

$t_w = W / (2 * \pi * R_m * S_c * K_s)$ (Weight)

$= 1{,}419.1 / (2 * \pi * 11.875 * 5{,}750.24 * 1.00)$

$= 0.0033"$

$t_t = |t_p + t_m - t_w|$ (total, net compressive)

$= |0 + 0 - (0.0033)|$

$= \underline{0.0033"}$

$t_c = t_{mc} + t_{wc} - t_{pc}$ (total required, compressive)

$= 0 + (0.0033) - (0)$

$= \underline{0.0033"}$

Empty, Corroded, Below Support Point

$t_p = 0"$ (Pressure)

$t_m = M / (\pi * R_m^2 * S_c * K_s)$ (bending)

$= 0 / (\pi * 11.875^2 * 11{,}812.64 * 1.00)$

$= 0"$

$t_w = W / (2 * \pi * R_m * S_c * K_s)$ (Weight)

$= 1{,}419.1 / (2 * \pi * 11.875 * 11{,}812.64 * 1.00)$

$= 0.0016"$

$t_t = |t_p + t_m - t_w|$ (total, net compressive)

$= |0 + 0 - (0.0016)|$

$= \underline{0.0016"}$

$t_c = t_{mc} + t_{wc} - t_{pc}$ (total required, compressive)

$= 0 + (0.0016) - (0)$

$= \underline{0.0016"}$

Empty, New, Below Support Point

$t_p = 0"$ (Pressure)

$t_m = M / (\pi * R_m^2 * S_c * K_s)$ (bending)

$= 0 / (\pi * 11.875^2 * 11{,}812.64 * 1.00)$

$= 0"$

$t_w = W / (2 * \pi * R_m * S_c * K_s)$ (Weight)

$= 1{,}419.1 / (2 * \pi * 11.875 * 11{,}812.64 * 1.00)$

$= 0.0016"$

$t_t = |t_p + t_m - t_w|$ (total, net compressive)

$= |0 + 0 - (0.0016)|$

$= \underline{0.0016"}$

$t_c = t_{mc} + t_{wc} - t_{pc}$ (total required, compressive)
$= 0 + (0.0016) - (0)$
$= \underline{0.0016"}$

Vacuum, Below Support Point

$t_p = P*R / (2*S_c*K_s + 0.40*|P|)$ (Pressure)
$= -15*11.75 / (2*11{,}812.64*1.00 + 0.40*|15|)$
$= -0.0075"$

$t_m = M / (\pi*R_m^2*S_c*K_s)$ (bending)
$= 0 / (\pi*11.875^2*11{,}812.64*1.00)$
$= 0"$

$t_w = W / (2*\pi*R_m*S_c*K_s)$ (Weight)
$= 1{,}419.1 / (2*\pi*11.875*11{,}812.64*1.00)$
$= 0.0016"$

$t_t = |t_p + t_m - t_w|$ (total, net compressive)
$= |-0.0075 + 0 - (0.0016)|$
$= \underline{0.0091"}$

$t_c = t_{mc} + t_{wc} - t_{pc}$ (total required, compressive)
$= 0 + (0.0016) - (-0.0075)$
$= \underline{0.0091"}$

Hot Shut Down, Corroded, Weight & Eccentric Moments Only, Below Support Point

$t_p = 0"$ (Pressure)
$t_m = M / (\pi*R_m^2*S_c*K_s)$ (bending)
$= 0 / (\pi*11.875^2*5{,}750.24*1.00)$
$= 0"$

$t_w = W / (2*\pi*R_m*S_c*K_s)$ (Weight)
$= 1{,}419.1 / (2*\pi*11.875*5{,}750.24*1.00)$
$= 0.0033"$

$t_t = |t_p + t_m - t_w|$ (total, net compressive)
$= |0 + 0 - (0.0033)|$
$= \underline{0.0033"}$

$t_c = t_{mc} + t_{wc} - t_{pc}$ (total required, compressive)
$= 0 + (0.0033) - (0)$
$= \underline{0.0033"}$

Bolted Cover #1

ASME Section VIII Division 1, 2007 Edition, A08 Addenda

Component: Bolted Cover
Material specification: SA-240 304L (II-D p. 82, ln. 38)
Rated MDMT per UHA-51(d)(1)(a) = -320 °F

Internal design pressure: P = 0 psi @ 932 °F
External design pressure: P_e = 15 psi @ 100 °F

Static liquid head:

P_{th} = 0.85 psi (SG=1.0000, H_s=23.5", Horizontal test head)

Corrosion allowance: Inner C = 0" Outer C = 0"

Design MDMT = -320 °F
Rated MDMT = -320 °F

No impact test performed
Material is not normalized
Material is not produced to Fine Grain Practice
PWHT is not performed

Radiography: Category A joints - Seamless No RT

Estimated weight: New = 570.5 lb corr = 570.5 lb

Head outside diameter = 32"
Cover thickness = 2.75"
Gasket groove depth = 0.093"

Design thickness, (at 70 °F) UG-34 (c)(2), gasket seating

$t = d*Sqr(1.9*W*h_G/(S*E*d^3)) + Corrosion$
$= 25.8125*Sqr(1.9*232,440*1.8438/(16,700*1*25.8125^3)) + 0$
= 1.3744 in

Maximum allowable working pressure, (at 932 °F)

$P = (S*E/C)*((t/d)^2 - (1.9*W*h_G/(S*E*d^3))) - P_s$
$= (10,600*1/0.3)*((2.75/25.8125)^2 - (1.9*155,618*1.8438/(10,600*1*25.8125^3))) - 0$
= 295.38 psi

Maximum allowable pressure, (At 70 °F)

$P = (S*E/C)*((t/d)^2 - (1.9*W*h_G/(S*E*d^3)))$
$= (16,700*1/0.3)*((2.75/25.8125)^2 - (1.9*245,171.9*1.8438/(16,700*1*25.8125^3)))$
= 465.37 psi

Design thickness for external pressure, (at 100 °F) U-2(g)

$t = d*Sqr(C*P_a/(S*E)) + Corrosion$
$= 25.8125*Sqr(0.3*15/(16,700*1)) + 0$
= 0.4237 in

Maximum allowable external pressure, (At 100 °F) U-2(g)

$P_a = (S*E/C)*(t/d)^2$

$= (16{,}700*1/0.3)*(2.75/25.8125)^2$
$= 631.83$ psi

Straight Flange on Bottom Ellipsoidal Head

ASME Section VIII Division 1, 2007 Edition, A08 Addenda

Component:	Straight Flange
Material specification:	SA-312 TP304 Wld & smls pipe (II-D p. 90, ln. 15)
Pipe NPS and Schedule:	24" Sch 10S
Rated MDMT per UHA-51(d)(1)(a) = -320 °F	

Internal design pressure: P = 0 psi @ 932 °F
External design pressure: P_e = 15 psi @ 100 °F

Static liquid head:

P_{th} = 0.85 psi (SG = 1, H_s = 23.5", Horizontal test head)

Corrosion allowance Inner C = 0" Outer C = 0"

Design MDMT = -320 °F
Rated MDMT = -320 °F

No impact test performed
Material is not normalized
Material is not produced to Fine Grain Practice
PWHT is not performed

Radiography: Longitudinal joint - Full UW-11(a) Type 1
Circumferential joint - Full UW-11(a) Type 1

Estimated weight New = 8.1 lb corr = 8.1 lb
Capacity New = 2.82 US gal corr = 2.82 US gal

ID = 23.5"
Length L_c = 1.5"
t = 0.25"

Maximum allowable working pressure, (at 932 °F) UG-27(c)(1)

P = S*E*t / (R + 0.60*t) - P_s
= 14,400*1.00*0.2188 / (11.75 + 0.60*0.2188) - 0
= 265.12 psi

Maximum allowable pressure, (at 70 °F) UG-27(c)(1)

P = S*E*t / (R + 0.60*t)
= 20,000*1.00*0.2188 / (11.75 + 0.60*0.2188)
= 368.23 psi

External Pressure, (Corroded & at 100 °F) UG-28(c)

L / D_o = 66.1033 / 24 = 2.7543
D_o / t = 24 / 0.1192 = 201.3703
From table G: A = 0.000161
From table HA-1: B = 2,265 psi

P_a = 4*B / (3*(D_o / t))
= 4*2265.4226 / (3*(24 / 0.1192))

= 15 psi

Design thickness for external pressure P_a = 15 psi

t_a = t + Corrosion = 0.1192 + 0 = 0.1192"

Maximum Allowable External Pressure, (Corroded & at 100 °F) UG-28(c)

L / D_o = 66.1033 / 24 = 2.7543
D_o / t = 24 / 0.2188 = 109.7143
From table G: A = 0.000405
From table HA-1: B = 5,689 psi

P_a = 4*B / (3*(D_o / t))
= 4*5688.6738 / (3*(24 / 0.2188))
= 69.13 psi

Design thickness = 0.1192"

The governing condition is due to external pressure.

The cylinder thickness of 0.25" is adequate.

Thickness Required Due to Pressure + External Loads

Condition	Pressure P (psi)	Allowable Stress Before UG-23 Stress Increase (psi)		Temperature (°F)	Corrosion C (in)	Load	Req'd Thk Due to Tension (in)	Req'd Thk Due to Compression (in)
		S_t	S_c					
Operating, Hot & Corroded	0	14,400	5,750	932	0	Weight	0	0
Operating, Hot & New	0	14,400	5,750	932	0	Weight	0	0
Hot Shut Down, Corroded	0	14,400	5,750	932	0	Weight	0	0
Hot Shut Down, New	0	14,400	5,750	932	0	Weight	0	0
Empty, Corroded	0	20,000	11,813	70	0	Weight	0	0
Empty, New	0	20,000	11,813	70	0	Weight	0	0
Vacuum	-15	20,000	11,813	100	0	Weight	0.0074	0.0074
Hot Shut Down, Corroded, Weight & Eccentric Moments Only	0	14,400	5,750	932	0	Weight	0	0

Allowable Compressive Stress, Hot and Corroded- S_{cHC}, (table HA-1)

A = 0.125 / (R_o / t)
= 0.125 / (12 / 0.2188)
= 0.002279

B = 5,750 psi

S = 14,400 / 1.00 = 14,400 psi

S_{cHC} = min(B, S) = 5,750 psi

Allowable Compressive Stress, Hot and New- S_{cHN}

S_{cHN} = S_{cHC}
= 5,750 psi

Allowable Compressive Stress, Cold and New- S_{cCN}, (table HA-1)

A = $0.125 / (R_o / t)$
= 0.125 / (12 / 0.2188)
= 0.002279

B = 11,813 psi

S = 20,000 / 1.00 = 20,000 psi

S_{cCN} = min(B, S) = 11,813 psi

Allowable Compressive Stress, Cold and Corroded- S_{cCC}

S_{cCC} = S_{cCN}
= 11,813 psi

Allowable Compressive Stress, Vacuum and Corroded- S_{cVC}, (table HA-1)

A = $0.125 / (R_o / t)$
= 0.125 / (12 / 0.2188)
= 0.002279

B = 11,813 psi

S = 20,000 / 1.00 = 20,000 psi

S_{cVC} = min(B, S) = 11,813 psi

Operating, Hot & Corroded, Top Seam

t_p = $P*R / (2*S_t*K_s*E_c + 0.40*|P|)$ (Pressure)
= 0*11.75 / (2*14,400*1.00*1.00 + 0.40*|0|)
= 0"

t_m = $M / (\pi*R_m^2*S_t*K_s*E_c)$ (bending)
= $0 / (\pi*11.875^2*14,400*1.00*1.00)$
= 0"

t_w = $W / (2*\pi*R_m*S_t*K_s*E_c)$ (Weight)
= $-43.4 / (2*\pi*11.875*14,400*1.00*1.00)$
= 0"

t_t = $t_p + t_m - t_w$ (total required, tensile)
= 0 + 0 - (0)
= 0"

t_c = $|t_{mc} + t_{wc} - t_{pc}|$ (total, net tensile)
= |0 + (0) - (0)|
= 0"

Maximum allowable working pressure, Longitudinal Stress

$P = 2*S_t*K_s*E_c*(t - t_m + t_w) / (R - 0.40*(t - t_m + t_w))$
$= 2*14{,}400*1.00*1.00*(0.2188 - 0 + (0)) / (11.75 - 0.40*(0.2188 - 0 + (0)))$
$= 540.09$ psi

Operating, Hot & New, Top Seam

t_p	=	$P*R / (2*S_t*K_s*E_c + 0.40*\|P\|)$	(Pressure)
	=	$0*11.75 / (2*14{,}400*1.00*1.00 + 0.40*\|0\|)$	
	=	0"	
t_m	=	$M / (\pi*R_m^2*S_t*K_s*E_c)$	(bending)
	=	$0 / (\pi*11.875^2*14{,}400*1.00*1.00)$	
	=	0"	
t_w	=	$W / (2*\pi*R_m*S_t*K_s*E_c)$	(Weight)
	=	$-43.4 / (2*\pi*11.875*14{,}400*1.00*1.00)$	
	=	0"	
t_t	=	$t_p + t_m - t_w$	(total required, tensile)
	=	$0 + 0 - (0)$	
	=	0"	
t_c	=	$\|t_{mc} + t_{wc} - t_{pc}\|$	(total, net tensile)
	=	$\|0 + (0) - (0)\|$	
	=	0"	

Maximum allowable working pressure, Longitudinal Stress

$P = 2*S_t*K_s*E_c*(t - t_m + t_w) / (R - 0.40*(t - t_m + t_w))$
$= 2*14{,}400*1.00*1.00*(0.2188 - 0 + (0)) / (11.75 - 0.40*(0.2188 - 0 + (0)))$
$= 540.09$ psi

Hot Shut Down, Corroded, Top Seam

t_p	=	0"	(Pressure)
t_m	=	$M / (\pi*R_m^2*S_t*K_s*E_c)$	(bending)
	=	$0 / (\pi*11.875^2*14{,}400*1.00*1.00)$	
	=	0"	
t_w	=	$W / (2*\pi*R_m*S_t*K_s*E_c)$	(Weight)
	=	$-43.4 / (2*\pi*11.875*14{,}400*1.00*1.00)$	
	=	0"	
t_t	=	$t_p + t_m - t_w$	(total required, tensile)
	=	$0 + 0 - (0)$	
	=	0"	
t_c	=	$\|t_{mc} + t_{wc} - t_{pc}\|$	(total, net tensile)

$= |0 + (0) - (0)|$
$= \underline{0''}$

Hot Shut Down, New, Top Seam

$t_p = 0''$ (Pressure)
$t_m = M / (\pi * R_m^2 * S_t * K_s * E_c)$ (bending)
$= 0 / (\pi * 11.875^2 * 14{,}400 * 1.00 * 1.00)$
$= 0''$

$t_w = W / (2 * \pi * R_m * S_t * K_s * E_c)$ (Weight)
$= -43.4 / (2 * \pi * 11.875 * 14{,}400 * 1.00 * 1.00)$
$= 0''$

$t_t = t_p + t_m - t_w$ (total required, tensile)
$= 0 + 0 - (0)$
$= \underline{0''}$

$t_c = |t_{mc} + t_{wc} - t_{pc}|$ (total, net tensile)
$= |0 + (0) - (0)|$
$= \underline{0''}$

Empty, Corroded, Top Seam

$t_p = 0''$ (Pressure)
$t_m = M / (\pi * R_m^2 * S_t * K_s * E_c)$ (bending)
$= 0 / (\pi * 11.875^2 * 20{,}000 * 1.00 * 1.00)$
$= 0''$

$t_w = W / (2 * \pi * R_m * S_t * K_s * E_c)$ (Weight)
$= -43.4 / (2 * \pi * 11.875 * 20{,}000 * 1.00 * 1.00)$
$= 0''$

$t_t = t_p + t_m - t_w$ (total required, tensile)
$= 0 + 0 - (0)$
$= \underline{0''}$

$t_c = |t_{mc} + t_{wc} - t_{pc}|$ (total, net tensile)
$= |0 + (0) - (0)|$
$= \underline{0''}$

Empty, New, Top Seam

$t_p = 0''$ (Pressure)
$t_m = M / (\pi * R_m^2 * S_t * K_s * E_c)$ (bending)
$= 0 / (\pi * 11.875^2 * 20{,}000 * 1.00 * 1.00)$
$= 0''$

$t_w = W / (2 * \pi * R_m * S_t * K_s * E_c)$ (Weight)
$= -43.4 / (2 * \pi * 11.875 * 20{,}000 * 1.00 * 1.00)$

$= 0"$

$t_t = t_p + t_m - t_w$ (total required, tensile)

$= 0 + 0 - (0)$

$= \underline{0"}$

$t_c = |t_{mc} + t_{wc} - t_{pc}|$ (total, net tensile)

$= |0 + (0) - (0)|$

$= \underline{0"}$

Vacuum, Top Seam

$t_p = P*R / (2*S_c*K_s + 0.40*|P|)$ (Pressure)

$= -15*11.75 / (2*11{,}812.64*1.00 + 0.40*|15|)$

$= -0.0075"$

$t_m = M / (\pi*R_m^2*S_c*K_s)$ (bending)

$= 0 / (\pi*11.875^2*11{,}812.64*1.00)$

$= 0"$

$t_w = W / (2*\pi*R_m*S_c*K_s)$ (Weight)

$= -43.4 / (2*\pi*11.875*11{,}812.64*1.00)$

$= 0"$

$t_t = |t_p + t_m - t_w|$ (total, net compressive)

$= |-0.0075 + 0 - (0)|$

$= \underline{0.0074"}$

$t_c = t_{mc} + t_{wc} - t_{pc}$ (total required, compressive)

$= 0 + (0) - (-0.0075)$

$= \underline{0.0074"}$

Hot Shut Down, Corroded, Weight & Eccentric Moments Only, Top Seam

$t_p = 0"$ (Pressure)

$t_m = M / (\pi*R_m^2*S_t*K_s*E_c)$ (bending)

$= 0 / (\pi*11.875^2*14{,}400*1.00*1.00)$

$= 0"$

$t_w = W / (2*\pi*R_m*S_t*K_s*E_c)$ (Weight)

$= -43.4 / (2*\pi*11.875*14{,}400*1.00*1.00)$

$= 0"$

$t_t = t_p + t_m - t_w$ (total required, tensile)

$= 0 + 0 - (0)$

$= \underline{0"}$

$t_c = |t_{mc} + t_{wc} - t_{pc}|$ (total, net tensile)

$= |0 + (0) - (0)|$

$= \underline{0"}$

Bottom Ellipsoidal Head

ASME Section VIII, Division 1, 2007 Edition, A08 Addenda

Component: Ellipsoidal Head
Material Specification: SA-312 TP304 Wld & smls pipe (II-D p.90, ln. 15)
Material Rated MDMT per UHA-51(d)(1)(a) = -320 °F

External design pressure: P_e = 15 psi @ 100 °F

Static liquid head:

P_s= 0 psi (SG=1, H_s=0" Operating head)
P_{th}= 0.8483 psi (SG=1, H_s=23.5" Horizontal test head)

Corrosion allowance: Inner C = 0" Outer C = 0"

Design MDMT = -320 °F
Rated MDMT = N/A

No impact test performed
Material is not normalized
Material is not produced to fine grain practice
PWHT is not performed
Do not Optimize MDMT / Find MAWP

Radiography:	Category A joints -	Full UW-11(a) Type 1
	Head to shell seam -	Full UW-11(a) Type 1

Estimated weight*:	new = 43.4 lb	corr = 43.4 lb
Capacity*:	new = 10.2 US gal	corr = 10.2 US gal

* includes straight flange

Inner diameter	=	23.5"
Minimum head thickness	=	0.1875"
Head ratio D/2h	=	2 (new)
Head ratio D/2h	=	2 (corroded)
Straight flange length L_{sf}	=	1.5"
Nominal straight flange thickness t_{sf}	=	0.25"

Results Summary

The governing condition is UG-16.

Minimum thickness per UG-16	=	0.0625" + 0" = 0.0625"
Design thickness due to external pressure (t_e)	=	0.0619"
Maximum allowable external pressure (MAEP)	=	82.82 psi

Maximum allowable working pressure, (Corroded at 932 °F) UG-32(d)(1)

$$P = 2*S*E*t/(D + 0.2*t) - P_s$$
$$= 2*14{,}400*1*0.1875/(23.5 + 0.2*0.1875) - 0$$
$$= 229.42 \text{ psi}$$

The maximum allowable working pressure (MAWP) is 229.42 psi.

Maximum allowable pressure, (New at 70 °F) UG-32(d)(1)

$$P = 2*S*E*t/(D + 0.2*t) - P_s$$

= 2*20,000*1*0.1875/(23.5 +0.2*0.1875) - 0
= 318.64 psi

The maximum allowable pressure (MAP) is 318.64 psi.

Design thickness for external pressure, (Corroded at 100 °F) UG-33(d)

Equivalent outside spherical radius (R_o)

R_o = K_o*D_o
= 0.8861 * 23.875
= 21.1552 in

A = 0.125 / (R_o/t)
= 0.125 / (21.1552/0.061844)
= 0.000365

From Table HA-1: B=5,131.1514 psi

P_a = B/(R_o/t)
= 5,131.151/(21.1552/0.061844)
= 15 psi

t = 0.0618" + Corrosion = 0.0618" + 0" = 0.0618"
Check the external pressure per UG-33(a)(1) UG-32(d)(1)

t = 1.67*P_e*D/(2*S*E - 0.2*1.67*P_e) + Corrosion
= 1.67*15*23.5/(2*20,000*1 - 0.2*1.67*15) + 0
= 0.0147"

The head external pressure design thickness (t_e) is 0.0618".

Maximum Allowable External Pressure, (Corroded at 100 °F) UG-33(d)

Equivalent outside spherical radius (R_o)

R_o = K_o*D_o
= 0.8861 * 23.875
= 21.1552 in

A = 0.125 / (R_o/t)
= 0.125 / (21.1552/0.1875)
= 0.001108

From Table HA-1: B=9,344.501 psi

P_a = B/(R_o/t)
= 9,344.501/(21.1552/0.1875)
= 82.8209 psi

Check the Maximum External Pressure, UG-33(a)(1) UG-32(d)(1)

P = 2*S*E*t/((D + 0.2*t)*1.67) - P_{s2}
= 2*20,000*1*0.1875/((23.5 +0.2*0.1875)*1.67) - 0
= 190.8 psi

The maximum allowable external pressure (MAEP) is 82.82 psi.

% Forming strain - UHA-44(a)(2)(b)

$$EFE = (75*t / R_f)*(1 - R_f / R_o)$$
$$= (75*0.25 / 4.12)*(1 - 4.12 / \infty)$$
$$= 4.551\%$$

ASME Section VIII Division 1, 2007 Edition, A08 Addenda

$t_{w(lower)}$ = 0.0943 in
Leg_{41} = 0.1347 in

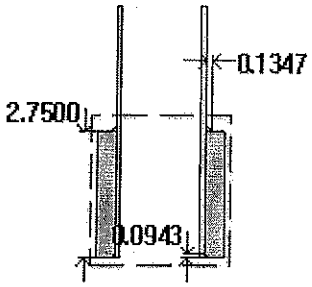

Note: round inside edges per UG-76(c)

Located on:	Bolted Cover #1
Liquid static head included:	0 psi
Nozzle material specification:	SA-240 304L (II-D p. 82, ln. 38)
Nozzle longitudinal joint efficiency:	1
Nozzle orientation:	280°
Local vessel minimum thickness:	2.75 in
Nozzle inside diameter, new:	1.7305 in
Nozzle nominal wall thickness:	0.1348 in
Nozzle corrosion allowance:	0 in
Projection available outside vessel, Lpr:	3.25 in
Distance to head center, R:	9.5 in

This nozzle passes through a Category A joint.

Reinforcement Calculations for External Pressure

UG-39 Area Calculation Summary (in^2) For Pe = 481.85 psi @ 100 °F The opening is adequately reinforced							UG-45 Nozzle Wall Thickness Summary (in) The nozzle passes UG-45	
A required	A available	A_1	A_2	A_3	A_5	A welds	t_{req}	t_{min}
2.0779	2.078	2.0106	0.0493	--	--	0.0181	0.1348	0.1348

UG-41 Weld Failure Path Analysis Summary (lb_f) All failure paths are stronger than the applicable weld loads				
Weld load W	Weld load W_{1-1}	Path 1-1 strength	Weld load W_{2-2}	Path 2-2 strength
2,692.55	1,125.58	8,078.12	13,502.37	7,124.88

UW-16 Weld Sizing Summary			
Weld description	Required weld size (in)	Actual weld size (in)	Status
Nozzle to shell fillet (Leg_{41})	0.0943	0.0943	weld size is adequate
Nozzle to shell groove (Lower)	0.0943	0.0943	weld size is adequate

Calculations for external pressure 481.85 psi @ 100 °F

Parallel Limits of reinforcement per UG-40

L_R = MAX(d, R_n + (t_n - C_n) + (t - C))
= MAX(1.7305, 0.8653 + (0.1348 - 0) + (2.75 - 0))
= 3.75 in

Outer Normal Limits of reinforcement per UG-40

L_H = MIN(2.5*(t - C), 2.5*(t_n - C_n) + t_e)
= MIN(2.5*(2.75 - 0), 2.5*(0.1348 - 0) + 0)
= 0.3369 in

Nozzle required thickness per UG-28 t_{rn} = 0.0616 in

From UG-34 required thickness t_r = 2.4015 in

Area required per UG-39

Allowable stresses: S_n = 16,700, S_v = 16,700 psi

f_{r1} = lesser of 1 or S_n/S_v = 1
f_{r2} = lesser of 1 or S_n/S_v = 1

A = $0.5*(d*t_r*F + 2*t_n*t_r*F*(1 - f_{r1}))$
= $0.5*(1.7305*2.4015*1 + 2*0.1348*2.4015*1*(1 - 1))$
= <u>2.0779</u> in^2

Area available from FIG. UG-37.1

A_1 = larger of the following= <u>2.0106</u> in^2

= $d*(E_1*t - F*t_r) - 2*t_n*(E_1*t - F*t_r)*(1 - f_{r1})$
= $1.7305*(1*2.75 - 1*2.4015) - 2*0.1348*(1*2.75 - 1*2.4015)*(1 - 1)$
= 0.603 in^2

= $2*(t + t_n)*(E_1*t - F*t_r) - 2*t_n*(E_1*t - F*t_r)*(1 - f_{r1})$
= $2*(2.75 + 0.1348)*(1*2.75 - 1*2.4015) - 2*0.1348*(1*2.75 - 1*2.4015)*(1 - 1)$
= 2.0106 in^2

A_2 = smaller of the following= <u>0.0493</u> in^2

= $2*(t_n - t_{rn})*f_{r2}*L_{pr}$
= $2*(0.1348 - 0.0616)*1*3.25$
= 0.4754 in^2

= $5*(t_n - t_{rn})*f_{r2}*t_n$
= $5*(0.1348 - 0.0616)*1*0.1348$
= 0.0493 in^2

A_{41} = Leg^2*f_{r2}
= 0.1347^2*1
= <u>0.0181</u> in^2

Area = $A_1 + A_2 + A_{41}$
= 2.0106 + 0.0493 + 0.0181
= <u>2.078</u> in^2

As Area >= A the reinforcement is adequate.

UW-16(d) Weld Check

t_{min} = lesser of 0.75 or t_n or t = 0.1348 in
$t_{1(min)}$ or $t_{2(min)}$ = lesser of 0.25 or $0.7*t_{min}$ = <u>0.0943</u> in
$t_{1(actual)}$ = 0.7*Leg = 0.7*0.1347 = 0.0943 in
The weld size t_1 is satisfactory.
$t_{2(actual)}$ = 0.0943 in
The weld size t_2 is satisfactory.

$t_1 + t_2 = 0.1886 >= 1.25*t_{min}$

The combined weld sizes for t_1 and t_2 are satisfactory.

UG-45 Nozzle Neck Thickness Check

Wall thickness per UG-45(a):	$t_{r1} = 0.0616$ in
Wall thickness per UG-45(b)(2):	$t_{r2} = 2.4015$ in
Wall thickness per UG-16(b):	$t_{r3} = 0.0625$ in
Standard wall pipe per UG-45(b)(4):	$t_{r4} = 0.1348$ in
The greater of t_{r2} or t_{r3}:	$t_{r5} = 2.4015$ in
The lesser of t_{r4} or t_{r5}:	$t_{r6} = 0.1348$ in

Required per UG-45 is the larger of t_{r1} or t_{r6} = <u>0.1348</u> in

Available nozzle wall thickness new, $t_n = 0.1348$ in

The nozzle neck thickness is adequate.

Allowable stresses in joints UG-45(c) and UW-15(c)

Groove weld in tension:	0.74*16,700 =	12,358 psi
Nozzle wall in shear:	0.7*16,700 =	11,690 psi
Inner fillet weld in shear:	0.49*16,700 =	8,183 psi

Strength of welded joints:

(1) Inner fillet weld in shear
$(\pi/2)$*Nozzle OD*Leg*S_i = $(\pi/2)$*2*0.1347*8,183 = 3,462.82 lb_f

(3) Nozzle wall in shear
$(\pi/2)$*Mean nozzle dia*t_n*S_n = $(\pi/2)$*1.8653*0.1348*11,690 = 4,615.3 lb_f

(4) Groove weld in tension
$(\pi/2)$*Nozzle OD*t_w*S_g = $(\pi/2)$*2*0.0943*12,358 = 3,662.06 lb_f

Loading on welds per UG-41(b)(1)

$$W = (A - A_1 + 2*t_n*f_{r1}*(E_1*t - F*t_r))*S_v$$
$$= (2.0779 - 2.0106 + 2*0.1348*1*(1*2.75 - 1*2.4015))*16,700$$
$$= \underline{2,692.55}\ lb_f$$

$$W_{1-1} = (A_2 + A_5 + A_{41} + A_{42})*S_v$$
$$= (0.0493 + 0 + 0.0181 + 0)*16,700$$
$$= \underline{1,125.58}\ lb_f$$

$$W_{2-2} = (A_2 + A_3 + A_{41} + A_{43} + 2*t_n*t*f_{r1})*S_v$$
$$= (0.0493 + 0 + 0.0181 + 0 + 2*0.1348*2.75*1)*16,700$$
$$= \underline{13,502.37}\ lb_f$$

Load for path 1-1 lesser of W or W_{1-1} = 1125.58 lb_f
Path 1-1 through (1) & (3) = 3,462.82 + 4,615.3 = 8,078.12 lb_f
Path 1-1 is stronger than W_{1-1} so it is acceptable per UG-41(b)(1).

Load for path 2-2 lesser of W or W_{2-2} = 2692.55 lb_f
Path 2-2 through (1), (4) = 3,462.82 + 3,662.06 = 7,124.88 lb_f
Path 2-2 is stronger than W so it is acceptable per UG-41(b)(2).

% Forming strain - UHA-44(a)(2)(a)

$$EFE = (50*t / R_f)*(1 - R_f / R_o)$$
$$= (50*0.1348 / 0.9326)*(1 - 0.9326 / \infty)$$
$$= 7.2242\%$$

External Pressure, (Corroded & at 100 °F) UG-28(c)

$L / D_o = 3.25 / 2 = 1.6250$

$D_o / t = 2 / 0.0616 = 32.4625$

From table G: A = 0.004459

From table HA-3: B = 11,732 psi

$$P_a = 4*B / (3*(D_o / t))$$
$$= 4*11731.5215 / (3*(2 / 0.0616))$$
$$= 481.85 \text{ psi}$$

Design thickness for external pressure P_a = 481.85 psi

$t_a = t + \text{Corrosion} = 0.0616 + 0 = 0.0616"$

ASME Section VIII Division 1, 2007 Edition, A08 Addenda

$t_{w(lower)}$ = 0.0943 in
Leg_{41} = 0.1347 in

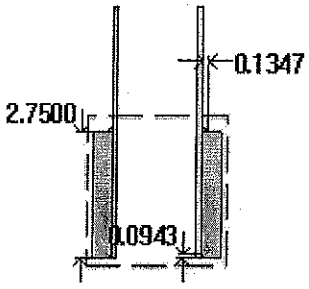

Note: round inside edges per UG-76(c)

Located on:	Bolted Cover #1
Liquid static head included:	0 psi
Nozzle material specification:	SA-240 304L (II-D p. 82, ln. 38)
Nozzle longitudinal joint efficiency:	1
Nozzle orientation:	200°
Local vessel minimum thickness:	2.75 in
Nozzle inside diameter, new:	1.7305 in
Nozzle nominal wall thickness:	0.1348 in
Nozzle corrosion allowance:	0 in
Projection available outside vessel, Lpr:	3.25 in
Distance to head center, R:	9.5 in

This nozzle passes through a Category A joint.

Reinforcement Calculations for External Pressure

UG-39 Area Calculation Summary (in^2) For Pe = 481.85 psi @ 100 °F The opening is adequately reinforced							UG-45 Nozzle Wall Thickness Summary (in) The nozzle passes UG-45	
A required	A available	A_1	A_2	A_3	A_5	A welds	t_{req}	t_{min}
2.0779	2.078	2.0106	0.0493	--	--	0.0181	0.1348	0.1348

UG-41 Weld Failure Path Analysis Summary (lb_f) All failure paths are stronger than the applicable weld loads				
Weld load W	Weld load W_{1-1}	Path 1-1 strength	Weld load W_{2-2}	Path 2-2 strength
2,692.55	1,125.58	8,078.12	13,502.37	7,124.88

UW-16 Weld Sizing Summary			
Weld description	Required weld size (in)	Actual weld size (in)	Status
Nozzle to shell fillet (Leg_{41})	0.0943	0.0943	weld size is adequate
Nozzle to shell groove (Lower)	0.0943	0.0943	weld size is adequate

Calculations for external pressure 481.85 psi @ 100 °F

Parallel Limits of reinforcement per UG-40

$$L_R = MAX(d, R_n + (t_n - C_n) + (t - C))$$
$$= MAX(1.7305, 0.8653 + (0.1348 - 0) + (2.75 - 0))$$
$$= 3.75 \text{ in}$$

Outer Normal Limits of reinforcement per UG-40

$$L_H = MIN(2.5*(t - C), 2.5*(t_n - C_n) + t_e)$$
$$= MIN(2.5*(2.75 - 0), 2.5*(0.1348 - 0) + 0)$$
$$= 0.3369 \text{ in}$$

Nozzle required thickness per UG-28 t_{rn} = 0.0616 in

From UG-34 required thickness t_r = 2.4015 in

Area required per UG-39

Allowable stresses: S_n = 16,700, S_v = 16,700 psi

f_{r1} = lesser of 1 or S_n/S_v = 1
f_{r2} = lesser of 1 or S_n/S_v = 1

A = 0.5*(d*t_r*F + 2*t_n*t_r*F*(1 - f_{r1}))
= 0.5*(1.7305*2.4015*1 + 2*0.1348*2.4015*1*(1 - 1))
= <u>2.0779</u> in^2

Area available from FIG. UG-37.1

A_1 = larger of the following= <u>2.0106</u> in^2

= d*(E_1*t - F*t_r) - 2*t_n*(E_1*t - F*t_r)*(1 - f_{r1})
= 1.7305*(1*2.75 - 1*2.4015) - 2*0.1348*(1*2.75 - 1*2.4015)*(1 - 1)
= 0.603 in^2

= 2*(t + t_n)*(E_1*t - F*t_r) - 2*t_n*(E_1*t - F*t_r)*(1 - f_{r1})
= 2*(2.75 + 0.1348)*(1*2.75 - 1*2.4015) - 2*0.1348*(1*2.75 - 1*2.4015)*(1 - 1)
= 2.0106 in^2

A_2 = smaller of the following= <u>0.0493</u> in^2

= 2*(t_n - t_{rn})*f_{r2}*L_{pr}
= 2*(0.1348 - 0.0616)*1*3.25
= 0.4754 in^2

= 5*(t_n - t_{rn})*f_{r2}*t_n
= 5*(0.1348 - 0.0616)*1*0.1348
= 0.0493 in^2

A_{41} = Leg^2*f_{r2}
= 0.1347^2*1
= <u>0.0181</u> in^2

Area = A_1 + A_2 + A_{41}
= 2.0106 + 0.0493 + 0.0181
= <u>2.078</u> in^2

As Area >= A the reinforcement is adequate.

UW-16(d) Weld Check

t_{min} = lesser of 0.75 or t_n or t = 0.1348 in
$t_{1(min)}$ or $t_{2(min)}$ = lesser of 0.25 or 0.7*t_{min} = <u>0.0943</u> in
$t_{1(actual)}$ = 0.7*Leg = 0.7*0.1347 = 0.0943 in
The weld size t_1 is satisfactory.
$t_{2(actual)}$ = 0.0943 in
The weld size t_2 is satisfactory.

$t_1 + t_2 = 0.1886 >= 1.25*t_{min}$

The combined weld sizes for t_1 and t_2 are satisfactory.

UG-45 Nozzle Neck Thickness Check

Wall thickness per UG-45(a):	$t_{r1} = 0.0616$ in
Wall thickness per UG-45(b)(2):	$t_{r2} = 2.4015$ in
Wall thickness per UG-16(b):	$t_{r3} = 0.0625$ in
Standard wall pipe per UG-45(b)(4):	$t_{r4} = 0.1348$ in
The greater of t_{r2} or t_{r3}:	$t_{r5} = 2.4015$ in
The lesser of t_{r4} or t_{r5}:	$t_{r6} = 0.1348$ in

Required per UG-45 is the larger of t_{r1} or t_{r6} = <u>0.1348</u> in

Available nozzle wall thickness new, $t_n = 0.1348$ in

The nozzle neck thickness is adequate.

Allowable stresses in joints UG-45(c) and UW-15(c)

Groove weld in tension:	0.74*16,700 =	12,358 psi
Nozzle wall in shear:	0.7*16,700 =	11,690 psi
Inner fillet weld in shear:	0.49*16,700 =	8,183 psi

Strength of welded joints:

(1) Inner fillet weld in shear
$(\pi/2)$*Nozzle OD*Leg*S_i = $(\pi/2)$*2*0.1347*8,183 = 3,462.82 lb_f

(3) Nozzle wall in shear
$(\pi/2)$*Mean nozzle dia*t_n*S_n = $(\pi/2)$*1.8653*0.1348*11,690 = 4,615.3 lb_f

(4) Groove weld in tension
$(\pi/2)$*Nozzle OD*t_w*S_g = $(\pi/2)$*2*0.0943*12,358 = 3,662.06 lb_f

Loading on welds per UG-41(b)(1)

$$W = (A - A_1 + 2*t_n*f_{r1}*(E_1*t - F*t_r))*S_v$$
$$= (2.0779 - 2.0106 + 2*0.1348*1*(1*2.75 - 1*2.4015))*16,700$$
$$= \underline{2,692.55}\ lb_f$$

$$W_{1\text{-}1} = (A_2 + A_5 + A_{41} + A_{42})*S_v$$
$$= (0.0493 + 0 + 0.0181 + 0)*16,700$$
$$= \underline{1,125.58}\ lb_f$$

$$W_{2\text{-}2} = (A_2 + A_3 + A_{41} + A_{43} + 2*t_n*t*f_{r1})*S_v$$
$$= (0.0493 + 0 + 0.0181 + 0 + 2*0.1348*2.75*1)*16,700$$
$$= \underline{13,502.37}\ lb_f$$

Load for path 1-1 lesser of W or W_{1-1} = 1125.58 lb_f
Path 1-1 through (1) & (3) = 3,462.82 + 4,615.3 = <u>8,078.12</u> lb_f
Path 1-1 is stronger than W_{1-1} so it is acceptable per UG-41(b)(1).

Load for path 2-2 lesser of W or W_{2-2} = 2692.55 lb_f
Path 2-2 through (1), (4) = 3,462.82 + 3,662.06 = <u>7,124.88</u> lb_f
Path 2-2 is stronger than W so it is acceptable per UG-41(b)(2).

% Forming strain - UHA-44(a)(2)(a)

$$EFE = (50*t / R_f)*(1 - R_f / R_o)$$
$$= (50*0.1348 / 0.9326)*(1 - 0.9326 / \infty)$$
$$= 7.2242\%$$

External Pressure, (Corroded & at 100 °F) UG-28(c)

L / D_o = 3.25 / 2 = 1.6250

D_o / t = 2 / 0.0616 = 32.4625

From table G: A = 0.004459

From table HA-3: B = 11,732 psi

$$P_a = 4*B / (3*(D_o / t))$$
$$= 4*11731.5215 / (3*(2 / 0.0616))$$
$$= 481.85 \text{ psi}$$

Design thickness for external pressure P_a = 481.85 psi

t_a = t + Corrosion = 0.0616 + 0 = 0.0616"

ASME Section VIII Division 1, 2007 Edition, A08 Addenda

$t_{w(lower)}$ = 0.1875 in
Leg_{41} = 0.25 in

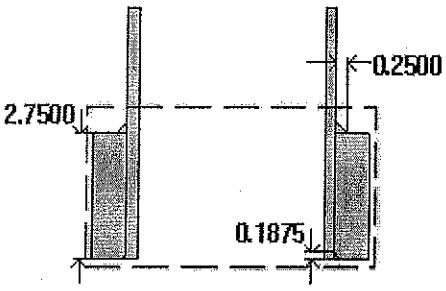

Note: round inside edges per UG-76(c)

Located on:	Bolted Cover #1
Liquid static head included:	0 psi
Nozzle material specification:	SA-312 TP304 Wld & smls pipe (II-D p. 90, ln. 15)
Nozzle longitudinal joint efficiency:	1
Nozzle description:	4" Sch 40S (Std)
Nozzle orientation:	330°
Local vessel minimum thickness:	2.75 in
Nozzle inside diameter, new:	4.026 in
Nozzle nominal wall thickness:	0.237 in
Nozzle corrosion allowance:	0 in
Projection available outside vessel, Lpr:	3.25 in
Distance to head center, R:	7.56 in

This nozzle passes through a Category A joint.

Reinforcement Calculations for External Pressure

UG-39 Area Calculation Summary (in^2) For Pe = 363.62 psi @ 100 °F The opening is adequately reinforced							UG-45 Nozzle Wall Thickness Summary (in) The nozzle passes UG-45	
A required	A available	A_1	A_2	A_3	A_5	A welds	t_{req}	t_{min}
4.1995	4.1996	3.9656	0.1715	--	--	0.0625	0.2074	0.2074

UG-41 Weld Failure Path Analysis Summary (lb_f) All failure paths are stronger than the applicable weld loads				
Weld load W	Weld load W_{1-1}	Path 1-1 strength	Weld load W_{2-2}	Path 2-2 strength
9,160.73	3,907.8	36,678.89	25,676.25	30,839.35

UW-16 Weld Sizing Summary			
Weld description	Required weld size (in)	Actual weld size (in)	Status
Nozzle to shell fillet (Leg_{41})	0.1659	0.175	weld size is adequate
Nozzle to shell groove (Lower)	0.1659	0.1875	weld size is adequate

Calculations for external pressure 363.62 psi @ 100 °F

Parallel Limits of reinforcement per UG-40

$$L_R = MAX(d, R_n + (t_n - C_n) + (t - C))$$
$$= MAX(4.026, 2.013 + (0.237 - 0) + (2.75 - 0))$$
$$= 5 \text{ in}$$

Outer Normal Limits of reinforcement per UG-40

$$L_H = MIN(2.5*(t - C), 2.5*(t_n - C_n) + t_e)$$
$$= MIN(2.5*(2.75 - 0), 2.5*(0.237 - 0) + 0)$$
$$= 0.5925 \text{ in}$$

Nozzle required thickness per UG-28 t_{rn} = 0.0923 in

From UG-34 required thickness t_r = 2.0862 in

Area required per UG-39

Allowable stresses: S_n = 20,000, S_v = 16,700 psi

f_{r1} = lesser of 1 or S_n/S_v = 1
f_{r2} = lesser of 1 or S_n/S_v = 1

A = $0.5*(d*t_r*F + 2*t_n*t_r*F*(1 - f_{r1}))$
= $0.5*(4.026*2.0862*1 + 2*0.237*2.0862*1*(1 - 1))$
= 4.1995 in^2

Area available from FIG. UG-37.1

A_1 = larger of the following= 3.9656 in^2

= $d*(E_1*t - F*t_r) - 2*t_n*(E_1*t - F*t_r)*(1 - f_{r1})$
= $4.026*(1*2.75 - 1*2.0862) - 2*0.237*(1*2.75 - 1*2.0862)*(1 - 1)$
= 2.6725 in^2

= $2*(t + t_n)*(E_1*t - F*t_r) - 2*t_n*(E_1*t - F*t_r)*(1 - f_{r1})$
= $2*(2.75 + 0.237)*(1*2.75 - 1*2.0862) - 2*0.237*(1*2.75 - 1*2.0862)*(1 - 1)$
= 3.9656 in^2

A_2 = smaller of the following= 0.1715 in^2

= $2*(t_n - t_{rn})*f_{r2}*L_{pr}$
= $2*(0.237 - 0.0923)*1*3.25$
= 0.9405 in^2

= $5*(t_n - t_{rn})*f_{r2}*t_n$
= $5*(0.237 - 0.0923)*1*0.237$
= 0.1715 in^2

A_{41} = Leg^2*f_{r2}
= 0.25^2*1
= 0.0625 in^2

Area = $A_1 + A_2 + A_{41}$
= 3.9656 + 0.1715 + 0.0625
= 4.1996 in^2

As Area >= A the reinforcement is adequate.

UW-16(d) Weld Check

t_{min} = lesser of 0.75 or t_n or t = 0.237 in
$t_{1(min)}$ or $t_{2(min)}$ = lesser of 0.25 or $0.7*t_{min}$ = 0.1659 in
$t_{1(actual)}$ = 0.7*Leg = 0.7*0.25 = 0.175 in
The weld size t_1 is satisfactory.
$t_{2(actual)}$ = 0.1875 in
The weld size t_2 is satisfactory.

$t_1 + t_2 = 0.3625 >= 1.25*t_{min}$

The combined weld sizes for t_1 and t_2 are satisfactory.

UG-45 Nozzle Neck Thickness Check

Wall thickness per UG-45(a):	$t_{r1} = 0.0923$ in
Wall thickness per UG-45(b)(2):	$t_{r2} = 2.0862$ in
Wall thickness per UG-16(b):	$t_{r3} = 0.0625$ in
Standard wall pipe per UG-45(b)(4):	$t_{r4} = 0.2074$ in
The greater of t_{r2} or t_{r3}:	$t_{r5} = 2.0862$ in
The lesser of t_{r4} or t_{r5}:	$t_{r6} = 0.2074$ in

Required per UG-45 is the larger of t_{r1} or t_{r6} = <u>0.2074</u> in

Available nozzle wall thickness new, $t_n = 0.875*0.237 = 0.2074$ in

The nozzle neck thickness is adequate.

Allowable stresses in joints UG-45(c) and UW-15(c)

Groove weld in tension:	0.74*16,700 =	12,358 psi
Nozzle wall in shear:	0.7*20,000 =	14,000 psi
Inner fillet weld in shear:	0.49*16,700 =	8,183 psi

Strength of welded joints:

(1) Inner fillet weld in shear
$(\pi/2)$*Nozzle OD*Leg*S_i = $(\pi/2)*4.5*0.25*8,183 = 14,460.55$ lb_f

(3) Nozzle wall in shear
$(\pi/2)$*Mean nozzle dia*t_n*S_n = $(\pi/2)*4.263*0.237*14,000 = 22,218.34$ lb_f

(4) Groove weld in tension
$(\pi/2)$*Nozzle OD*t_w*S_g = $(\pi/2)*4.5*0.1875*12,358 = 16,378.79$ lb_f

Loading on welds per UG-41(b)(1)

$$W = (A - A_1 + 2*t_n*f_{r1}*(E_1*t - F*t_r))*S_v$$
$$= (4.1995 - 3.9656 + 2*0.237*1*(1*2.75 - 1*2.0862))*16,700$$
$$= \underline{9,160.73}\ lb_f$$

$$W_{1-1} = (A_2 + A_5 + A_{41} + A_{42})*S_v$$
$$= (0.1715 + 0 + 0.0625 + 0)*16,700$$
$$= \underline{3,907.8}\ lb_f$$

$$W_{2-2} = (A_2 + A_3 + A_{41} + A_{43} + 2*t_n*t*f_{r1})*S_v$$
$$= (0.1715 + 0 + 0.0625 + 0 + 2*0.237*2.75*1)*16,700$$
$$= \underline{25,676.25}\ lb_f$$

Load for path 1-1 lesser of W or W_{1-1} = 3907.8 lb_f
Path 1-1 through (1) & (3) = 14,460.55 + 22,218.34 = 36,678.89 lb_f
Path 1-1 is stronger than W_{1-1} so it is acceptable per UG-41(b)(1).

Load for path 2-2 lesser of W or W_{2-2} = 9160.73 lb_f
Path 2-2 through (1), (4) = 14,460.55 + 16,378.79 = 30,839.35 lb_f
Path 2-2 is stronger than W so it is acceptable per UG-41(b)(2).

External Pressure, (Corroded & at 100 °F) UG-28(c)

L / D_o = 3.25 / 4.5 = 0.7222

D_o / t = 4.5 / 0.0923 = 48.7536

From table G: A = 0.005779

From table HA-1: B = 13,296 psi

P_a = 4*B / (3*(D_o / t))
= 4*13295.7129 / (3*(4.5 / 0.0923))
= 363.62 psi

Design thickness for external pressure P_a = 363.62 psi

t_a = t + Corrosion = 0.0923 + 0 = 0.0923"

ASME Section VIII Division 1, 2007 Edition, A08 Addenda

$t_{w(lower)}$ = 0.1875 in
Leg_{41} = 0.25 in

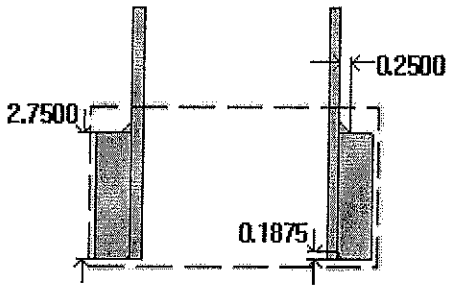

Note: round inside edges per UG-76(c)

Located on:	Bolted Cover #1
Liquid static head included:	0 psi
Nozzle material specification:	SA-312 TP304 Wld & smls pipe (II-D p. 90, ln. 15)
Nozzle longitudinal joint efficiency:	1
Nozzle description:	4" Sch 40S (Std)
Nozzle orientation:	240°
Local vessel minimum thickness:	2.75 in
Nozzle inside diameter, new:	4.026 in
Nozzle nominal wall thickness:	0.237 in
Nozzle corrosion allowance:	0 in
Projection available outside vessel, Lpr:	3.25 in
Distance to head center, R:	8 in

This nozzle passes through a Category A joint.

Reinforcement Calculations for External Pressure

UG-39 Area Calculation Summary (in^2) For Pe = 363.62 psi @ 100 °F The opening is adequately reinforced							UG-45 Nozzle Wall Thickness Summary (in) The nozzle passes UG-45	
A required	A available	A_1	A_2	A_3	A_5	A welds	t_{req}	t_{min}
4.1995	4.1996	3.9656	0.1715	--	--	0.0625	0.2074	0.2074

UG-41 Weld Failure Path Analysis Summary (lb_f) All failure paths are stronger than the applicable weld loads				
Weld load W	Weld load W_{1-1}	Path 1-1 strength	Weld load W_{2-2}	Path 2-2 strength
9,160.73	3,907.8	36,678.89	25,676.25	30,839.35

UW-16 Weld Sizing Summary			
Weld description	Required weld size (in)	Actual weld size (in)	Status
Nozzle to shell fillet (Leg_{41})	0.1659	0.175	weld size is adequate
Nozzle to shell groove (Lower)	0.1659	0.1875	weld size is adequate

Calculations for external pressure 363.62 psi @ 100 °F

Parallel Limits of reinforcement per UG-40

$$L_R = MAX(d, R_n + (t_n - C_n) + (t - C))$$
$$= MAX(4.026, 2.013 + (0.237 - 0) + (2.75 - 0))$$
$$= 5 \text{ in}$$

Outer Normal Limits of reinforcement per UG-40

$$L_H = MIN(2.5*(t - C), 2.5*(t_n - C_n) + t_e)$$
$$= MIN(2.5*(2.75 - 0), 2.5*(0.237 - 0) + 0)$$
$$= 0.5925 \text{ in}$$

Nozzle required thickness per UG-28 t_{rn} = 0.0923 in

From UG-34 required thickness t_r = 2.0862 in

Area required per UG-39

Allowable stresses: S_n = 20,000, S_v = 16,700 psi

f_{r1} = lesser of 1 or S_n/S_v = 1
f_{r2} = lesser of 1 or S_n/S_v = 1

A = 0.5*(d*t_r*F + 2*t_n*t_r*F*(1 - f_{r1}))
= 0.5*(4.026*2.0862*1 + 2*0.237*2.0862*1*(1 - 1))
= <u>4.1995</u> in^2

Area available from FIG. UG-37.1

A_1 = larger of the following= <u>3.9656</u> in^2

= d*(E_1*t - F*t_r) - 2*t_n*(E_1*t - F*t_r)*(1 - f_{r1})
= 4.026*(1*2.75 - 1*2.0862) - 2*0.237*(1*2.75 - 1*2.0862)*(1 - 1)
= 2.6725 in^2

= 2*(t + t_n)*(E_1*t - F*t_r) - 2*t_n*(E_1*t - F*t_r)*(1 - f_{r1})
= 2*(2.75 + 0.237)*(1*2.75 - 1*2.0862) - 2*0.237*(1*2.75 - 1*2.0862)*(1 - 1)
= 3.9656 in^2

A_2 = smaller of the following= <u>0.1715</u> in^2

= 2*(t_n - t_{rn})*f_{r2}*L_{pr}
= 2*(0.237 - 0.0923)*1*3.25
= 0.9405 in^2

= 5*(t_n - t_{rn})*f_{r2}*t_n
= 5*(0.237 - 0.0923)*1*0.237
= 0.1715 in^2

A_{41} = Leg^2*f_{r2}
= 0.25^2*1
= <u>0.0625</u> in^2

Area = A_1 + A_2 + A_{41}
= 3.9656 + 0.1715 + 0.0625
= <u>4.1996</u> in^2

As Area >= A the reinforcement is adequate.

UW-16(d) Weld Check

t_{min} = lesser of 0.75 or t_n or t = 0.237 in
$t_{1(min)}$ or $t_{2(min)}$ = lesser of 0.25 or 0.7*t_{min} = <u>0.1659</u> in
$t_{1(actual)}$ = 0.7*Leg = 0.7*0.25 = 0.175 in
The weld size t_1 is satisfactory.
$t_{2(actual)}$ = 0.1875 in
The weld size t_2 is satisfactory.

$t_1 + t_2 = 0.3625 >= 1.25*t_{min}$

The combined weld sizes for t_1 and t_2 are satisfactory.

UG-45 Nozzle Neck Thickness Check

Wall thickness per UG-45(a):	$t_{r1} = 0.0923$ in
Wall thickness per UG-45(b)(2):	$t_{r2} = 2.0862$ in
Wall thickness per UG-16(b):	$t_{r3} = 0.0625$ in
Standard wall pipe per UG-45(b)(4):	$t_{r4} = 0.2074$ in
The greater of t_{r2} or t_{r3}:	$t_{r5} = 2.0862$ in
The lesser of t_{r4} or t_{r5}:	$t_{r6} = 0.2074$ in

Required per UG-45 is the larger of t_{r1} or t_{r6} = <u>0.2074</u> in

Available nozzle wall thickness new, $t_n = 0.875*0.237 = 0.2074$ in

The nozzle neck thickness is adequate.

Allowable stresses in joints UG-45(c) and UW-15(c)

Groove weld in tension:	0.74*16,700 =	12,358 psi
Nozzle wall in shear:	0.7*20,000 =	14,000 psi
Inner fillet weld in shear:	0.49*16,700 =	8,183 psi

Strength of welded joints:

(1) Inner fillet weld in shear
$(\pi/2)$*Nozzle OD*Leg*S_i = $(\pi/2)$*4.5*0.25*8,183 = 14,460.55 lb_f

(3) Nozzle wall in shear
$(\pi/2)$*Mean nozzle dia*t_n*S_n = $(\pi/2)$*4.263*0.237*14,000 = 22,218.34 lb_f

(4) Groove weld in tension
$(\pi/2)$*Nozzle OD*t_w*S_g = $(\pi/2)$*4.5*0.1875*12,358 = 16,378.79 lb_f

Loading on welds per UG-41(b)(1)

$$W = (A - A_1 + 2*t_n*f_{r1}*(E_1*t - F*t_r))*S_v$$
$$= (4.1995 - 3.9656 + 2*0.237*1*(1*2.75 - 1*2.0862))*16{,}700$$
$$= \underline{9{,}160.73}\ lb_f$$

$$W_{1\text{-}1} = (A_2 + A_5 + A_{41} + A_{42})*S_v$$
$$= (0.1715 + 0 + 0.0625 + 0)*16{,}700$$
$$= \underline{3{,}907.8}\ lb_f$$

$$W_{2\text{-}2} = (A_2 + A_3 + A_{41} + A_{43} + 2*t_n*t*f_{r1})*S_v$$
$$= (0.1715 + 0 + 0.0625 + 0 + 2*0.237*2.75*1)*16{,}700$$
$$= \underline{25{,}676.25}\ lb_f$$

Load for path 1-1 lesser of W or W_{1-1} = 3907.8 lb_f
Path 1-1 through (1) & (3) = 14,460.55 + 22,218.34 = 36,678.89 lb_f
Path 1-1 is stronger than W_{1-1} so it is acceptable per UG-41(b)(1).

Load for path 2-2 lesser of W or W_{2-2} = 9160.73 lb_f
Path 2-2 through (1), (4) = 14,460.55 + 16,378.79 = 30,839.35 lb_f
Path 2-2 is stronger than W so it is acceptable per UG-41(b)(2).

External Pressure, (Corroded & at 100 °F) UG-28(c)

L / D_o = 3.25 / 4.5 = 0.7222

D_o / t = 4.5 / 0.0923 = 48.7536

From table G: A = 0.005779

From table HA-1: B = 13,296 psi

P_a = 4*B / (3*(D_o / t))
= 4*13295.7129 / (3*(4.5 / 0.0923))
= 363.62 psi

Design thickness for external pressure P_a = 363.62 psi

t_a = t + Corrosion = 0.0923 + 0 = 0.0923"

ASME Section VIII Division 1, 2007 Edition, A08 Addenda

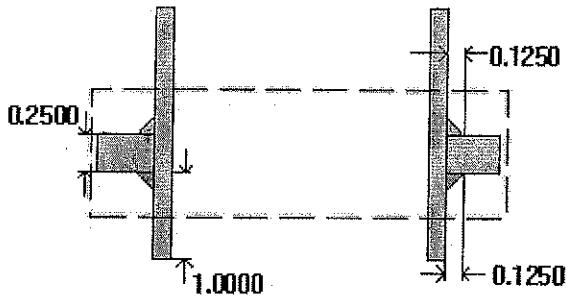

$t_{w(lower)}$ = 0 in
Leg_{41} = 0.125 in
Leg_{43} = 0.125 in
h_{new} = 1 in

Note: round inside edges per UG-76(c)

Located on:	Vacuum Vessel Shell
Liquid static head included:	0 psi
Nozzle material specification:	SA-240 304L (II-D p. 82, ln. 38)
Nozzle longitudinal joint efficiency:	1
Nozzle orientation:	180°
Local vessel minimum thickness:	0.2188 in
Nozzle center line offset to datum line:	8 in
End of nozzle to shell center:	13 in
Nozzle inside diameter, new:	1.75 in
Nozzle nominal wall thickness:	0.125 in
Nozzle corrosion allowance:	0 in
Projection available outside vessel, Lpr:	1 in
Internal projection, h_{new}:	1 in

This nozzle passes through a Category A joint.

Reinforcement Calculations for External Pressure

UG-37 Area Calculation Summary (in^2) For Pe = 56.26 psi @ 100 °F The opening is adequately reinforced							UG-45 Nozzle Wall Thickness Summary (in) The nozzle passes UG-45	
A required	A available	A_1	A_2	A_3	A_5	A welds	t_{req}	t_{min}
0.1806	0.1806	0.0293	0.0601	0.0652	--	0.026	0.0625	0.125

UG-41 Weld Failure Path Analysis Summary
Weld strength calculations are not required for external pressure

UW-16 Weld Sizing Summary			
Weld description	Required weld throat size (in)	Actual weld throat size (in)	Status
Nozzle to shell fillet (Leg_{41})	0.0875	0.0875	weld size is adequate
Nozzle to inside shell fillet (Leg_{43})	0.0875	0.0875 (corroded)	weld size is adequate

Calculations for external pressure 56.26 psi @ 100 °F

Parallel Limits of reinforcement per UG-40

L_R = MAX(d, R_n + (t_n - C_n) + (t - C))
= MAX(1.75, 0.875 + (0.125 - 0) + (0.2188 - 0))
= 1.75 in

Outer Normal Limits of reinforcement per UG-40

L_H = MIN(2.5*(t - C), 2.5*(t_n - C_n) + t_e)
= MIN(2.5*(0.2188 - 0), 2.5*(0.125 - 0) + 0)
= 0.3125 in

Inner Normal Limits of reinforcement per UG-40

L_I = MIN(2.5*(t - C), 2.5*(t_i - C_n - C))
= MIN(2.5*(0.2188 - 0), 2.5*(0.125 - 0 - 0))
= 0.3125 in

Nozzle required thickness per UG-28 t_{rn} = 0.0099 in

From UG-37(d)(1) required thickness t_r = 0.2017 in

Area required per UG-37(d)(1)

Allowable stresses: S_n = 16,700, S_v = 20,000 psi

f_{r1} = lesser of 1 or S_n/S_v = 0.835
f_{r2} = lesser of 1 or S_n/S_v = 0.835

$$A = 0.5*(d*t_r*F + 2*t_n*t_r*F*(1 - f_{r1}))$$
$$= 0.5*(1.75*0.2017*1 + 2*0.125*0.2017*1*(1 - 0.835))$$
$$= \underline{0.1806} \text{ in}^2$$

Area available from FIG. UG-37.1

A_1 = larger of the following= <u>0.0293</u> in^2

$$= d*(E_1*t - F*t_r) - 2*t_n*(E_1*t - F*t_r)*(1 - f_{r1})$$
$$= 1.75*(1*0.2188 - 1*0.2017) - 2*0.125*(1*0.2188 - 1*0.2017)*(1 - 0.835)$$
$$= 0.0293 \text{ in}^2$$

$$= 2*(t + t_n)*(E_1*t - F*t_r) - 2*t_n*(E_1*t - F*t_r)*(1 - f_{r1})$$
$$= 2*(0.2188 + 0.125)*(1*0.2188 - 1*0.2017) - 2*0.125*(1*0.2188 - 1*0.2017)*(1 - 0.835)$$
$$= 0.0111 \text{ in}^2$$

A_2 = smaller of the following= <u>0.0601</u> in^2

$$= 5*(t_n - t_{rn})*f_{r2}*t$$
$$= 5*(0.125 - 0.0099)*0.835*0.2188$$
$$= 0.1051 \text{ in}^2$$

$$= 5*(t_n - t_{rn})*f_{r2}*t_n$$
$$= 5*(0.125 - 0.0099)*0.835*0.125$$
$$= 0.0601 \text{ in}^2$$

A_3 = smaller of the following= <u>0.0652</u> in^2

$$= 5*t*t_i*f_{r2}$$
$$= 5*0.2188*0.125*0.835$$
$$= \underline{0.1142} \text{ in}^2$$

$$= 5*t_i*t_i*f_{r2}$$
$$= 5*0.125*0.125*0.835$$
$$= \underline{0.0652} \text{ in}^2$$

$$= 2*h*t_i*f_{r2}$$
$$= 2*1*0.125*0.835$$
$$= \underline{0.2088} \text{ in}^2$$

A_{41} = $Leg^2 * f_{r2}$
= $0.125^2 * 0.835$
= <u>0.013</u> in^2

A_{43} = $Leg^2 * f_{r2}$
= $0.125^2 * 0.835$
= <u>0.013</u> in^2

Area = $A_1 + A_2 + A_3 + A_{41} + A_{43}$
= 0.0293 + 0.0601 + 0.0652 + 0.013 + 0.013
= <u>0.1806</u> in^2

As Area >= A the reinforcement is adequate.

UW-16(d) Weld Check

t_{min} = lesser of 0.75 or t_n or t = 0.125 in
$t_{1(min)}$ or $t_{2(min)}$ = lesser of 0.25 or $0.7*t_{min}$ = <u>0.0875</u> in
$t_{1(actual)}$ = 0.7*Leg = 0.7*0.125 = 0.0875 in
The weld size t_1 is satisfactory.
$t_{2(actual)}$ = 0.7*Leg = 0.7*0.125 = 0.0875 in
The weld size t_2 is satisfactory.

$t_1 + t_2 = 0.175 >= 1.25*t_{min}$

The combined weld sizes for t_1 and t_2 are satisfactory.

UG-45 Nozzle Neck Thickness Check

Wall thickness per UG-45(a):	t_{r1} = 0.0099 in
Wall thickness per UG-45(b)(2):	t_{r2} = 0.0331 in
Wall thickness per UG-16(b):	t_{r3} = 0.0625 in
Standard wall pipe per UG-45(b)(4):	t_{r4} = 0.1348 in
The greater of t_{r2} or t_{r3}:	t_{r5} = 0.0625 in
The lesser of t_{r4} or t_{r5}:	t_{r6} = 0.0625 in

Required per UG-45 is the larger of t_{r1} or t_{r6} = <u>0.0625</u> in

Available nozzle wall thickness new, t_n = 0.125 in

The nozzle neck thickness is adequate.

% Forming strain - UHA-44(a)(2)(a)

EFE = $(50*t / R_f)*(1 - R_f / R_o)$
= $(50*0.125 / 0.9375)*(1 - 0.9375 / \infty)$
= 6.6667%

External Pressure, (Corroded & at 100 °F) UG-28(c)

L / D_o = 1.0417 / 2 = 0.5209
D_o / t = 2 / 0.0099 = 201.8611
From table G: A = 0.000924
From table HA-3: B = 8,518 psi

P_a = 4*B / (3*(D_o / t))
= 4*8518.4590 / (3*(2 / 0.0099))
= 56.27 psi

Design thickness for external pressure P_a = 56.27 psi

t_a = t + Corrosion = 0.0099 + 0 = 0.0099"

ASME Section VIII Division 1, 2007 Edition, A08 Addenda

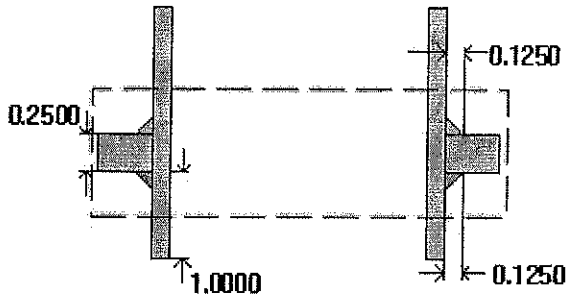

$t_{w(lower)}$ = 0 in
Leg_{41} = 0.125 in
Leg_{43} = 0.125 in
h_{new} = 1 in

Note: round inside edges per UG-76(c)

Located on:	Vacuum Vessel Shell
Liquid static head included:	0 psi
Nozzle material specification:	SA-240 304L (II-D p. 82, ln. 38)
Nozzle longitudinal joint efficiency:	1
Nozzle orientation:	300°
Local vessel minimum thickness:	0.2188 in
Nozzle center line offset to datum line:	8 in
End of nozzle to shell center:	13 in
Nozzle inside diameter, new:	1.75 in
Nozzle nominal wall thickness:	0.125 in
Nozzle corrosion allowance:	0 in
Projection available outside vessel, Lpr:	1 in
Internal projection, h_{new}:	1 in

This nozzle passes through a Category A joint.

Reinforcement Calculations for External Pressure

UG-37 Area Calculation Summary (in²) For Pe = 56.26 psi @ 100 °F The opening is adequately reinforced							UG-45 Nozzle Wall Thickness Summary (in) The nozzle passes UG-45	
A required	A available	A_1	A_2	A_3	A_5	A welds	t_{req}	t_{min}
0.1806	0.1806	0.0293	0.0601	0.0652	--	0.026	0.0625	0.125

UG-41 Weld Failure Path Analysis Summary
Weld strength calculations are not required for external pressure

UW-16 Weld Sizing Summary			
Weld description	Required weld throat size (in)	Actual weld throat size (in)	Status
Nozzle to shell fillet (Leg_{41})	0.0875	0.0875	weld size is adequate
Nozzle to inside shell fillet (Leg_{43})	0.0875	0.0875 (corroded)	weld size is adequate

Calculations for external pressure 56.26 psi @ 100 °F

Parallel Limits of reinforcement per UG-40

$L_R = MAX(d, R_n + (t_n - C_n) + (t - C))$
$= MAX(1.75, 0.875 + (0.125 - 0) + (0.2188 - 0))$
$= 1.75$ in

Outer Normal Limits of reinforcement per UG-40

$L_H = MIN(2.5*(t - C), 2.5*(t_n - C_n) + t_e)$
$= MIN(2.5*(0.2188 - 0), 2.5*(0.125 - 0) + 0)$
$= 0.3125$ in

Inner Normal Limits of reinforcement per UG-40

$L_I = MIN(2.5*(t - C), 2.5*(t_i - C_n - C))$
$= MIN(2.5*(0.2188 - 0), 2.5*(0.125 - 0 - 0))$
$= 0.3125$ in

Nozzle required thickness per UG-28 t_{rn} = 0.0099 in

From UG-37(d)(1) required thickness t_r = 0.2017 in

Area required per UG-37(d)(1)

Allowable stresses: S_n = 16,700, S_v = 20,000 psi

f_{r1} = lesser of 1 or S_n/S_v = 0.835
f_{r2} = lesser of 1 or S_n/S_v = 0.835

$$A = 0.5*(d*t_r*F + 2*t_n*t_r*F*(1 - f_{r1}))$$
$$= 0.5*(1.75*0.2017*1 + 2*0.125*0.2017*1*(1 - 0.835))$$
$$= \underline{0.1806} \text{ in}^2$$

Area available from FIG. UG-37.1

A_1 = larger of the following= $\underline{0.0293}$ in^2

$$= d*(E_1*t - F*t_r) - 2*t_n*(E_1*t - F*t_r)*(1 - f_{r1})$$
$$= 1.75*(1*0.2188 - 1*0.2017) - 2*0.125*(1*0.2188 - 1*0.2017)*(1 - 0.835)$$
$$= 0.0293 \text{ in}^2$$

$$= 2*(t + t_n)*(E_1*t - F*t_r) - 2*t_n*(E_1*t - F*t_r)*(1 - f_{r1})$$
$$= 2*(0.2188 + 0.125)*(1*0.2188 - 1*0.2017) - 2*0.125*(1*0.2188 - 1*0.2017)*(1 - 0.835)$$
$$= 0.0111 \text{ in}^2$$

A_2 = smaller of the following= $\underline{0.0601}$ in^2

$$= 5*(t_n - t_{rn})*f_{r2}*t$$
$$= 5*(0.125 - 0.0099)*0.835*0.2188$$
$$= 0.1051 \text{ in}^2$$

$$= 5*(t_n - t_{rn})*f_{r2}*t_n$$
$$= 5*(0.125 - 0.0099)*0.835*0.125$$
$$= 0.0601 \text{ in}^2$$

A_3 = smaller of the following= $\underline{0.0652}$ in^2

$$= 5*t*t_i*f_{r2}$$
$$= 5*0.2188*0.125*0.835$$
$$= \underline{0.1142} \text{ in}^2$$

$$= 5*t_i*t_i*f_{r2}$$
$$= 5*0.125*0.125*0.835$$
$$= \underline{0.0652} \text{ in}^2$$

$$= 2*h*t_i*f_{r2}$$
$$= 2*1*0.125*0.835$$
$$= \underline{0.2088} \text{ in}^2$$

A_{41} = $Leg^2 * f_{r2}$
= $0.125^2 * 0.835$
= <u>0.013</u> in^2

A_{43} = $Leg^2 * f_{r2}$
= $0.125^2 * 0.835$
= <u>0.013</u> in^2

Area = $A_1 + A_2 + A_3 + A_{41} + A_{43}$
= 0.0293 + 0.0601 + 0.0652 + 0.013 + 0.013
= <u>0.1806</u> in^2

As Area >= A the reinforcement is adequate.

UW-16(d) Weld Check

t_{min} = lesser of 0.75 or t_n or t = 0.125 in
$t_{1(min)}$ or $t_{2(min)}$ = lesser of 0.25 or $0.7*t_{min}$ = <u>0.0875</u> in
$t_{1(actual)}$ = 0.7*Leg = 0.7*0.125 = 0.0875 in
The weld size t_1 is satisfactory.
$t_{2(actual)}$ = 0.7*Leg = 0.7*0.125 = 0.0875 in
The weld size t_2 is satisfactory.

$t_1 + t_2 = 0.175 >= 1.25*t_{min}$

The combined weld sizes for t_1 and t_2 are satisfactory.

UG-45 Nozzle Neck Thickness Check

Wall thickness per UG-45(a):	t_{r1} = 0.0099 in
Wall thickness per UG-45(b)(2):	t_{r2} = 0.0331 in
Wall thickness per UG-16(b):	t_{r3} = 0.0625 in
Standard wall pipe per UG-45(b)(4):	t_{r4} = 0.1348 in
The greater of t_{r2} or t_{r3}:	t_{r5} = 0.0625 in
The lesser of t_{r4} or t_{r5}:	t_{r6} = 0.0625 in

Required per UG-45 is the larger of t_{r1} or t_{r6} = <u>0.0625</u> in

Available nozzle wall thickness new, t_n = 0.125 in

The nozzle neck thickness is adequate.

% Forming strain - UHA-44(a)(2)(a)

EFE = $(50*t / R_f)*(1 - R_f / R_o)$
= $(50*0.125 / 0.9375)*(1 - 0.9375 / \infty)$
= 6.6667%

External Pressure, (Corroded & at 100 °F) UG-28(c)

L / D_o = 1.0417 / 2 = 0.5209
D_o / t = 2 / 0.0099 = 201.8611
From table G: A = 0.000924
From table HA-3: B = 8,518 psi

P_a = 4*B / (3*(D_o / t))
= 4*8518.4590 / (3*(2 / 0.0099))
= 56.27 psi

Design thickness for external pressure P_a = 56.27 psi

t_a = t + Corrosion = 0.0099 + 0 = 0.0099"

Copy of Nozzle #1 (N8)

ASME Section VIII Division 1, 2007 Edition, A08 Addenda

$t_{w(lower)}$ = 0.0943 in
Leg_{41} = 0.1347 in

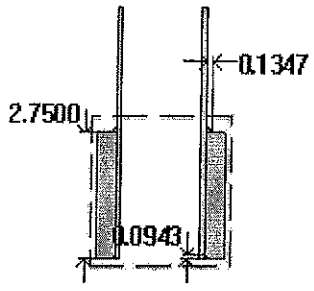

Note: round inside edges per UG-76(c)

Located on:	Bolted Cover #1
Liquid static head included:	0 psi
Nozzle material specification:	SA-240 304L (II-D p. 82, ln. 38)
Nozzle longitudinal joint efficiency:	1
Nozzle orientation:	60°
Local vessel minimum thickness:	2.75 in
Nozzle inside diameter, new:	1.7305 in
Nozzle nominal wall thickness:	0.1348 in
Nozzle corrosion allowance:	0 in
Projection available outside vessel, Lpr:	3.25 in
Distance to head center, R:	9.5 in

This nozzle passes through a Category A joint.

Reinforcement Calculations for External Pressure

UG-39 Area Calculation Summary (in^2) For Pe = 481.85 psi @ 100 °F The opening is adequately reinforced							UG-45 Nozzle Wall Thickness Summary (in) The nozzle passes UG-45	
A required	A available	A_1	A_2	A_3	A_5	A welds	t_{req}	t_{min}
2.0779	2.078	2.0106	0.0493	--	--	0.0181	0.1348	0.1348

UG-41 Weld Failure Path Analysis Summary (lb_f) All failure paths are stronger than the applicable weld loads				
Weld load W	Weld load W_{1-1}	Path 1-1 strength	Weld load W_{2-2}	Path 2-2 strength
2,692.55	1,125.58	8,078.12	13,502.37	7,124.88

UW-16 Weld Sizing Summary			
Weld description	Required weld size (in)	Actual weld size (in)	Status
Nozzle to shell fillet (Leg_{41})	0.0943	0.0943	weld size is adequate
Nozzle to shell groove (Lower)	0.0943	0.0943	weld size is adequate

Calculations for external pressure 481.85 psi @ 100 °F

Parallel Limits of reinforcement per UG-40

$$L_R = MAX(d, R_n + (t_n - C_n) + (t - C))$$
$$= MAX(1.7305, 0.8653 + (0.1348 - 0) + (2.75 - 0))$$
$$= 3.75 \text{ in}$$

Outer Normal Limits of reinforcement per UG-40

$$L_H = MIN(2.5*(t - C), 2.5*(t_n - C_n) + t_e)$$
$$= MIN(2.5*(2.75 - 0), 2.5*(0.1348 - 0) + 0)$$
$$= 0.3369 \text{ in}$$

Nozzle required thickness per UG-28 t_{rn} = 0.0616 in

From UG-34 required thickness t_r = 2.4015 in

Area required per UG-39

Allowable stresses: S_n = 16,700, S_v = 16,700 psi

f_{r1} = lesser of 1 or S_n/S_v = 1
f_{r2} = lesser of 1 or S_n/S_v = 1

A = $0.5*(d*t_r*F + 2*t_n*t_r*F*(1 - f_{r1}))$
= $0.5*(1.7305*2.4015*1 + 2*0.1348*2.4015*1*(1 - 1))$
= 2.0779 in^2

Area available from FIG. UG-37.1

A_1 = larger of the following= 2.0106 in^2

= $d*(E_1*t - F*t_r) - 2*t_n*(E_1*t - F*t_r)*(1 - f_{r1})$
= $1.7305*(1*2.75 - 1*2.4015) - 2*0.1348*(1*2.75 - 1*2.4015)*(1 - 1)$
= 0.603 in^2

= $2*(t + t_n)*(E_1*t - F*t_r) - 2*t_n*(E_1*t - F*t_r)*(1 - f_{r1})$
= $2*(2.75 + 0.1348)*(1*2.75 - 1*2.4015) - 2*0.1348*(1*2.75 - 1*2.4015)*(1 - 1)$
= 2.0106 in^2

A_2 = smaller of the following= 0.0493 in^2

= $2*(t_n - t_{rn})*f_{r2}*L_{pr}$
= $2*(0.1348 - 0.0616)*1*3.25$
= 0.4754 in^2

= $5*(t_n - t_{rn})*f_{r2}*t_n$
= $5*(0.1348 - 0.0616)*1*0.1348$
= 0.0493 in^2

A_{41} = Leg^2*f_{r2}
= 0.1347^2*1
= 0.0181 in^2

Area = $A_1 + A_2 + A_{41}$
= 2.0106 + 0.0493 + 0.0181
= 2.078 in^2

As Area >= A the reinforcement is adequate.

UW-16(d) Weld Check

t_{min} = lesser of 0.75 or t_n or t = 0.1348 in
$t_{1(min)}$ or $t_{2(min)}$ = lesser of 0.25 or $0.7*t_{min}$ = 0.0943 in
$t_{1(actual)}$ = 0.7*Leg = 0.7*0.1347 = 0.0943 in
The weld size t_1 is satisfactory.
$t_{2(actual)}$ = 0.0943 in
The weld size t_2 is satisfactory.

$t_1 + t_2 = 0.1886 >= 1.25*t_{min}$

The combined weld sizes for t_1 and t_2 are satisfactory.

UG-45 Nozzle Neck Thickness Check

Wall thickness per UG-45(a):	$t_{r1} = 0.0616$ in
Wall thickness per UG-45(b)(2):	$t_{r2} = 2.4015$ in
Wall thickness per UG-16(b):	$t_{r3} = 0.0625$ in
Standard wall pipe per UG-45(b)(4):	$t_{r4} = 0.1348$ in
The greater of t_{r2} or t_{r3}:	$t_{r5} = 2.4015$ in
The lesser of t_{r4} or t_{r5}:	$t_{r6} = 0.1348$ in

Required per UG-45 is the larger of t_{r1} or t_{r6} = <u>0.1348</u> in

Available nozzle wall thickness new, $t_n = 0.1348$ in

The nozzle neck thickness is adequate.

Allowable stresses in joints UG-45(c) and UW-15(c)

Groove weld in tension:	0.74*16,700 =	12,358 psi
Nozzle wall in shear:	0.7*16,700 =	11,690 psi
Inner fillet weld in shear:	0.49*16,700 =	8,183 psi

Strength of welded joints:

(1) Inner fillet weld in shear
$(\pi/2)$*Nozzle OD*Leg*S_i = $(\pi/2)$*2*0.1347*8,183 = 3,462.82 lb_f

(3) Nozzle wall in shear
$(\pi/2)$*Mean nozzle dia*t_n*S_n = $(\pi/2)$*1.8653*0.1348*11,690 = 4,615.3 lb_f

(4) Groove weld in tension
$(\pi/2)$*Nozzle OD*t_w*S_g = $(\pi/2)$*2*0.0943*12,358 = 3,662.06 lb_f

Loading on welds per UG-41(b)(1)

$$W = (A - A_1 + 2*t_n*f_{r1}*(E_1*t - F*t_r))*S_v$$
$$= (2.0779 - 2.0106 + 2*0.1348*1*(1*2.75 - 1*2.4015))*16,700$$
$$= \underline{2,692.55}\ lb_f$$

$$W_{1\text{-}1} = (A_2 + A_5 + A_{41} + A_{42})*S_v$$
$$= (0.0493 + 0 + 0.0181 + 0)*16,700$$
$$= \underline{1,125.58}\ lb_f$$

$$W_{2\text{-}2} = (A_2 + A_3 + A_{41} + A_{43} + 2*t_n*t*f_{r1})*S_v$$
$$= (0.0493 + 0 + 0.0181 + 0 + 2*0.1348*2.75*1)*16,700$$
$$= \underline{13,502.37}\ lb_f$$

Load for path 1-1 lesser of W or W_{1-1} = 1125.58 lb_f
Path 1-1 through (1) & (3) = 3,462.82 + 4,615.3 = 8,078.12 lb_f
Path 1-1 is stronger than W_{1-1} so it is acceptable per UG-41(b)(1).

Load for path 2-2 lesser of W or W_{2-2} = 2692.55 lb_f
Path 2-2 through (1), (4) = 3,462.82 + 3,662.06 = 7,124.88 lb_f
Path 2-2 is stronger than W so it is acceptable per UG-41(b)(2).

% Forming strain - UHA-44(a)(2)(a)

$$EFE = (50*t / R_f)*(1 - R_f / R_o)$$
$$= (50*0.1348 / 0.9326)*(1 - 0.9326 / \infty)$$
$$= 7.2242\%$$

External Pressure, (Corroded & at 100 °F) UG-28(c)

L / D_o = 3.25 / 2 = 1.6250

D_o / t = 2 / 0.0616 = 32.4625

From table G: A = 0.004459

From table HA-3: B = 11,732 psi

$$P_a = 4*B / (3*(D_o / t))$$
$$= 4*11731.5215 / (3*(2 / 0.0616))$$
$$= 481.85 \text{ psi}$$

Design thickness for external pressure P_a = 481.85 psi

t_a = t + Corrosion = 0.0616 + 0 = 0.0616"

ASME Section VIII Division 1, 2007 Edition, A08 Addenda

$t_{w(lower)}$ = 0.1875 in
Leg_{41} = 0.25 in

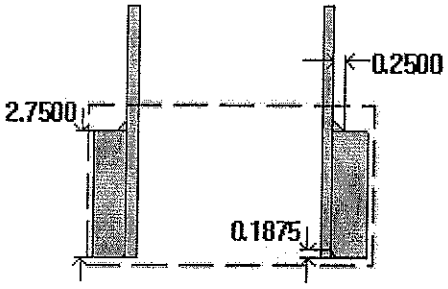

Note: round inside edges per UG-76(c)

Located on:	Bolted Cover #1
Liquid static head included:	0 psi
Nozzle material specification:	SA-312 TP304 Wld & smls pipe (II-D p. 90, ln. 15)
Nozzle longitudinal joint efficiency:	1
Nozzle description:	4" Sch 40S (Std)
Nozzle orientation:	30°
Local vessel minimum thickness:	2.75 in
Nozzle inside diameter, new:	4.026 in
Nozzle nominal wall thickness:	0.237 in
Nozzle corrosion allowance:	0 in
Projection available outside vessel, Lpr:	3.25 in
Distance to head center, R:	7.56 in

This nozzle passes through a Category A joint.

Reinforcement Calculations for External Pressure

UG-39 Area Calculation Summary (in^2) For Pe = 363.62 psi @ 100 °F The opening is adequately reinforced							UG-45 Nozzle Wall Thickness Summary (in) The nozzle passes UG-45	
A required	A available	A_1	A_2	A_3	A_5	A welds	t_{req}	t_{min}
4.1995	4.1996	3.9656	0.1715	--	--	0.0625	0.2074	0.2074

UG-41 Weld Failure Path Analysis Summary (lb_f) All failure paths are stronger than the applicable weld loads				
Weld load W	Weld load W_{1-1}	Path 1-1 strength	Weld load W_{2-2}	Path 2-2 strength
9,160.73	3,907.8	36,678.89	25,676.25	30,839.35

UW-16 Weld Sizing Summary			
Weld description	Required weld size (in)	Actual weld size (in)	Status
Nozzle to shell fillet (Leg_{41})	0.1659	0.175	weld size is adequate
Nozzle to shell groove (Lower)	0.1659	0.1875	weld size is adequate

Calculations for external pressure 363.62 psi @ 100 °F

Parallel Limits of reinforcement per UG-40

$$L_R = MAX(d, R_n + (t_n - C_n) + (t - C))$$
$$= MAX(4.026, 2.013 + (0.237 - 0) + (2.75 - 0))$$
$$= 5 \text{ in}$$

Outer Normal Limits of reinforcement per UG-40

$$L_H = MIN(2.5*(t - C), 2.5*(t_n - C_n) + t_e)$$
$$= MIN(2.5*(2.75 - 0), 2.5*(0.237 - 0) + 0)$$
$$= 0.5925 \text{ in}$$

Nozzle required thickness per UG-28 t_{rn} = 0.0923 in

From UG-34 required thickness t_r = 2.0862 in

Area required per UG-39

Allowable stresses: S_n = 20,000, S_v = 16,700 psi

f_{r1} = lesser of 1 or S_n/S_v = 1
f_{r2} = lesser of 1 or S_n/S_v = 1

A = 0.5*(d*t_r*F + 2*t_n*t_r*F*(1 - f_{r1}))
= 0.5*(4.026*2.0862*1 + 2*0.237*2.0862*1*(1 - 1))
= <u>4.1995</u> in^2

Area available from FIG. UG-37.1

A_1 = larger of the following= <u>3.9656</u> in^2

= d*(E_1*t - F*t_r) - 2*t_n*(E_1*t - F*t_r)*(1 - f_{r1})
= 4.026*(1*2.75 - 1*2.0862) - 2*0.237*(1*2.75 - 1*2.0862)*(1 - 1)
= 2.6725 in^2

= 2*(t + t_n)*(E_1*t - F*t_r) - 2*t_n*(E_1*t - F*t_r)*(1 - f_{r1})
= 2*(2.75 + 0.237)*(1*2.75 - 1*2.0862) - 2*0.237*(1*2.75 - 1*2.0862)*(1 - 1)
= 3.9656 in^2

A_2 = smaller of the following= <u>0.1715</u> in^2

= 2*(t_n - t_{rn})*f_{r2}*L_{pr}
= 2*(0.237 - 0.0923)*1*3.25
= 0.9405 in^2

= 5*(t_n - t_{rn})*f_{r2}*t_n
= 5*(0.237 - 0.0923)*1*0.237
= 0.1715 in^2

A_{41} = Leg^2*f_{r2}
= 0.25^2*1
= <u>0.0625</u> in^2

Area = A_1 + A_2 + A_{41}
= 3.9656 + 0.1715 + 0.0625
= <u>4.1996</u> in^2

As Area >= A the reinforcement is adequate.

UW-16(d) Weld Check

t_{min} = lesser of 0.75 or t_n or t = 0.237 in
$t_{1(min)}$ or $t_{2(min)}$ = lesser of 0.25 or 0.7*t_{min} = <u>0.1659</u> in
$t_{1(actual)}$ = 0.7*Leg = 0.7*0.25 = 0.175 in
The weld size t_1 is satisfactory.
$t_{2(actual)}$ = 0.1875 in
The weld size t_2 is satisfactory.

$t_1 + t_2 = 0.3625 >= 1.25*t_{min}$

The combined weld sizes for t_1 and t_2 are satisfactory.

UG-45 Nozzle Neck Thickness Check

Wall thickness per UG-45(a):	$t_{r1} = 0.0923$ in
Wall thickness per UG-45(b)(2):	$t_{r2} = 2.0862$ in
Wall thickness per UG-16(b):	$t_{r3} = 0.0625$ in
Standard wall pipe per UG-45(b)(4):	$t_{r4} = 0.2074$ in
The greater of t_{r2} or t_{r3}:	$t_{r5} = 2.0862$ in
The lesser of t_{r4} or t_{r5}:	$t_{r6} = 0.2074$ in

Required per UG-45 is the larger of t_{r1} or t_{r6} = <u>0.2074</u> in

Available nozzle wall thickness new, $t_n = 0.875*0.237 = 0.2074$ in

The nozzle neck thickness is adequate.

Allowable stresses in joints UG-45(c) and UW-15(c)

Groove weld in tension:	0.74*16,700 =	12,358 psi
Nozzle wall in shear:	0.7*20,000 =	14,000 psi
Inner fillet weld in shear:	0.49*16,700 =	8,183 psi

Strength of welded joints:

(1) Inner fillet weld in shear
$(\pi/2)$*Nozzle OD*Leg*S_i = $(\pi/2)$*4.5*0.25*8,183 = 14,460.55 lb_f

(3) Nozzle wall in shear
$(\pi/2)$*Mean nozzle dia*t_n*S_n = $(\pi/2)$*4.263*0.237*14,000 = 22,218.34 lb_f

(4) Groove weld in tension
$(\pi/2)$*Nozzle OD*t_w*S_g = $(\pi/2)$*4.5*0.1875*12,358 = 16,378.79 lb_f

Loading on welds per UG-41(b)(1)

$$W = (A - A_1 + 2*t_n*f_{r1}*(E_1*t - F*t_r))*S_v$$
$$= (4.1995 - 3.9656 + 2*0.237*1*(1*2.75 - 1*2.0862))*16{,}700$$
$$= \underline{9{,}160.73}\ lb_f$$

$$W_{1\text{-}1} = (A_2 + A_5 + A_{41} + A_{42})*S_v$$
$$= (0.1715 + 0 + 0.0625 + 0)*16{,}700$$
$$= \underline{3{,}907.8}\ lb_f$$

$$W_{2\text{-}2} = (A_2 + A_3 + A_{41} + A_{43} + 2*t_n*t*f_{r1})*S_v$$
$$= (0.1715 + 0 + 0.0625 + 0 + 2*0.237*2.75*1)*16{,}700$$
$$= \underline{25{,}676.25}\ lb_f$$

Load for path 1-1 lesser of W or W_{1-1} = 3907.8 lb_f
Path 1-1 through (1) & (3) = 14,460.55 + 22,218.34 = 36,678.89 lb_f
Path 1-1 is stronger than W_{1-1} so it is acceptable per UG-41(b)(1).

Load for path 2-2 lesser of W or W_{2-2} = 9160.73 lb_f
Path 2-2 through (1), (4) = 14,460.55 + 16,378.79 = 30,839.35 lb_f
Path 2-2 is stronger than W so it is acceptable per UG-41(b)(2).

External Pressure, (Corroded & at 100 °F) UG-28(c)

L / D_o = 3.25 / 4.5 = 0.7222

D_o / t = 4.5 / 0.0923 = 48.7536

From table G: A = 0.005779

From table HA-1: B = 13,296 psi

P_a = 4*B / (3*(D_o / t))
= 4*13295.7129 / (3*(4.5 / 0.0923))
= 363.62 psi

Design thickness for external pressure P_a = 363.62 psi

t_a = t + Corrosion = 0.0923 + 0 = 0.0923"

ASME Section VIII Division 1, 2007 Edition, A08 Addenda

$t_{w(lower)}$ = 0.1875 in
Leg_{41} = 0.25 in

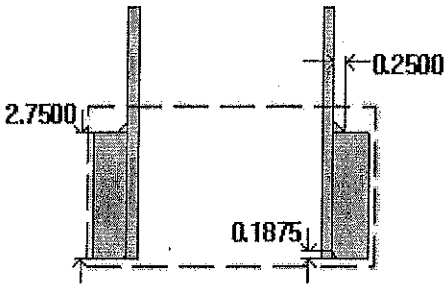

Note: round inside edges per UG-76(c)

Located on:	Bolted Cover #1
Liquid static head included:	0 psi
Nozzle material specification:	SA-312 TP304 Wld & smls pipe (II-D p. 90, ln. 15)
Nozzle longitudinal joint efficiency:	1
Nozzle description:	4" Sch 40S (Std)
Nozzle orientation:	90°
Local vessel minimum thickness:	2.75 in
Nozzle inside diameter, new:	4.026 in
Nozzle nominal wall thickness:	0.237 in
Nozzle corrosion allowance:	0 in
Projection available outside vessel, Lpr:	3.25 in
Distance to head center, R:	7.5 in

This nozzle passes through a Category A joint.

Reinforcement Calculations for External Pressure

UG-39 Area Calculation Summary (in^2) For Pe = 363.62 psi @ 100 °F The opening is adequately reinforced							UG-45 Nozzle Wall Thickness Summary (in) The nozzle passes UG-45	
A required	A available	A_1	A_2	A_3	A_5	A welds	t_{req}	t_{min}
4.1995	4.1996	3.9656	0.1715	--	--	0.0625	0.2074	0.2074

UG-41 Weld Failure Path Analysis Summary (lb_f) All failure paths are stronger than the applicable weld loads				
Weld load W	Weld load W_{1-1}	Path 1-1 strength	Weld load W_{2-2}	Path 2-2 strength
9,160.73	3,907.8	36,678.89	25,676.25	30,839.35

UW-16 Weld Sizing Summary			
Weld description	Required weld size (in)	Actual weld size (in)	Status
Nozzle to shell fillet (Leg_{41})	0.1659	0.175	weld size is adequate
Nozzle to shell groove (Lower)	0.1659	0.1875	weld size is adequate

Calculations for external pressure 363.62 psi @ 100 °F

Parallel Limits of reinforcement per UG-40

$$L_R = MAX(d, R_n + (t_n - C_n) + (t - C))$$
$$= MAX(4.026, 2.013 + (0.237 - 0) + (2.75 - 0))$$
$$= 5 \text{ in}$$

Outer Normal Limits of reinforcement per UG-40

$$L_H = MIN(2.5*(t - C), 2.5*(t_n - C_n) + t_e)$$
$$= MIN(2.5*(2.75 - 0), 2.5*(0.237 - 0) + 0)$$
$$= 0.5925 \text{ in}$$

Nozzle required thickness per UG-28 t_{rn} = 0.0923 in

From UG-34 required thickness t_r = 2.0862 in

Area required per UG-39

Allowable stresses: S_n = 20,000, S_v = 16,700 psi

f_{r1} = lesser of 1 or S_n/S_v = 1
f_{r2} = lesser of 1 or S_n/S_v = 1

A = $0.5*(d*t_r*F + 2*t_n*t_r*F*(1 - f_{r1}))$
= $0.5*(4.026*2.0862*1 + 2*0.237*2.0862*1*(1 - 1))$
= <u>4.1995</u> in^2

Area available from FIG. UG-37.1

A_1 = larger of the following= <u>3.9656</u> in^2

= $d*(E_1*t - F*t_r) - 2*t_n*(E_1*t - F*t_r)*(1 - f_{r1})$
= $4.026*(1*2.75 - 1*2.0862) - 2*0.237*(1*2.75 - 1*2.0862)*(1 - 1)$
= 2.6725 in^2

= $2*(t + t_n)*(E_1*t - F*t_r) - 2*t_n*(E_1*t - F*t_r)*(1 - f_{r1})$
= $2*(2.75 + 0.237)*(1*2.75 - 1*2.0862) - 2*0.237*(1*2.75 - 1*2.0862)*(1 - 1)$
= 3.9656 in^2

A_2 = smaller of the following= <u>0.1715</u> in^2

= $2*(t_n - t_{rn})*f_{r2}*L_{pr}$
= $2*(0.237 - 0.0923)*1*3.25$
= 0.9405 in^2

= $5*(t_n - t_{rn})*f_{r2}*t_n$
= $5*(0.237 - 0.0923)*1*0.237$
= 0.1715 in^2

A_{41} = Leg^2*f_{r2}
= 0.25^2*1
= <u>0.0625</u> in^2

Area = $A_1 + A_2 + A_{41}$
= 3.9656 + 0.1715 + 0.0625
= <u>4.1996</u> in^2

As Area >= A the reinforcement is adequate.

UW-16(d) Weld Check

t_{min} = lesser of 0.75 or t_n or t = 0.237 in
$t_{1(min)}$ or $t_{2(min)}$ = lesser of 0.25 or $0.7*t_{min}$ = <u>0.1659</u> in
$t_{1(actual)}$ = 0.7*Leg = 0.7*0.25 = 0.175 in
The weld size t_1 is satisfactory.
$t_{2(actual)}$ = 0.1875 in
The weld size t_2 is satisfactory.

$t_1 + t_2 = 0.3625 >= 1.25*t_{min}$

The combined weld sizes for t_1 and t_2 are satisfactory.

UG-45 Nozzle Neck Thickness Check

Wall thickness per UG-45(a):	$t_{r1} = 0.0923$ in
Wall thickness per UG-45(b)(2):	$t_{r2} = 2.0862$ in
Wall thickness per UG-16(b):	$t_{r3} = 0.0625$ in
Standard wall pipe per UG-45(b)(4):	$t_{r4} = 0.2074$ in
The greater of t_{r2} or t_{r3}:	$t_{r5} = 2.0862$ in
The lesser of t_{r4} or t_{r5}:	$t_{r6} = 0.2074$ in

Required per UG-45 is the larger of t_{r1} or t_{r6} = <u>0.2074</u> in

Available nozzle wall thickness new, $t_n = 0.875*0.237 = 0.2074$ in

The nozzle neck thickness is adequate.

Allowable stresses in joints UG-45(c) and UW-15(c)

Groove weld in tension:	0.74*16,700 =	12,358 psi
Nozzle wall in shear:	0.7*20,000 =	14,000 psi
Inner fillet weld in shear:	0.49*16,700 =	8,183 psi

Strength of welded joints:

(1) Inner fillet weld in shear
$(\pi/2)$*Nozzle OD*Leg*S_i = $(\pi/2)*4.5*0.25*8,183 = 14,460.55$ lb_f

(3) Nozzle wall in shear
$(\pi/2)$*Mean nozzle dia*t_n*S_n = $(\pi/2)*4.263*0.237*14,000 = 22,218.34$ lb_f

(4) Groove weld in tension
$(\pi/2)$*Nozzle OD*t_w*S_g = $(\pi/2)*4.5*0.1875*12,358 = 16,378.79$ lb_f

Loading on welds per UG-41(b)(1)

$$W = (A - A_1 + 2*t_n*f_{r1}*(E_1*t - F*t_r))*S_v$$
$$= (4.1995 - 3.9656 + 2*0.237*1*(1*2.75 - 1*2.0862))*16,700$$
$$= \underline{9,160.73}\ lb_f$$

$$W_{1-1} = (A_2 + A_5 + A_{41} + A_{42})*S_v$$
$$= (0.1715 + 0 + 0.0625 + 0)*16,700$$
$$= \underline{3,907.8}\ lb_f$$

$$W_{2-2} = (A_2 + A_3 + A_{41} + A_{43} + 2*t_n*t*f_{r1})*S_v$$
$$= (0.1715 + 0 + 0.0625 + 0 + 2*0.237*2.75*1)*16,700$$
$$= \underline{25,676.25}\ lb_f$$

Load for path 1-1 lesser of W or W_{1-1} = 3907.8 lb_f
Path 1-1 through (1) & (3) = 14,460.55 + 22,218.34 = 36,678.89 lb_f
Path 1-1 is stronger than W_{1-1} so it is acceptable per UG-41(b)(1).

Load for path 2-2 lesser of W or W_{2-2} = 9160.73 lb_f
Path 2-2 through (1), (4) = 14,460.55 + 16,378.79 = 30,839.35 lb_f
Path 2-2 is stronger than W so it is acceptable per UG-41(b)(2).

External Pressure, (Corroded & at 100 °F) UG-28(c)

L / D_o = 3.25 / 4.5 = 0.7222

D_o / t = 4.5 / 0.0923 = 48.7536

From table G: A = 0.005779

From table HA-1: B = 13,296 psi

P_a = 4*B / (3*(D_o / t))
= 4*13295.7129 / (3*(4.5 / 0.0923))
= 363.62 psi

Design thickness for external pressure P_a = 363.62 psi

t_a = t + Corrosion = 0.0923 + 0 = 0.0923"

ASME VIII-1, 2007 Edition, A08 Addenda, Appendix 2 Flange Calculations

Flange is attached to:	Vacuum Vessel Shell (Top)	
Flange type:	Slip on integral	
Flange material specification:	SA-240 304L (II-D p. 82, ln. 38)	
Bolt material specification:	SA-193 B7 Bolt <= 2 1/2 (II-D p. 348, ln. 33)	
Bolt Description:	1.25 in Series 8 Thread	
Internal design pressure, P:	0 psi @ 932 °F	
Required flange thickness: t_r=	3.0036 in	
Maximum allowable working pressure, MAWP:	235.89 psi @ 932 °F	
Maximum allowable pressure, MAP:	542.88 psi @ 70 °F	
External design pressure, P_e	15 psi @ 100 °F	
Maximum allowable external pressure, MAEP:	2,046.96 psi @ 100 °F	
Corrosion allowance:	Bore = 0 in	Flange = 0 in
Bolt corrosion (root), C_{bolt}:	0 in	
Design MDMT:	-320 °F	No impact test performed
Rated MDMT:	-320 °F	Flange material is not normalized Material is not produced to fine grain practice PWHT is not performed
Estimated weight:	New = 413.3 lb	corroded = 413.3 lb

Flange dimensions, new

flange OD	A	= 32 in
bolt circle	C	= 29.5 in
gasket OD		= 26 in
gasket ID		= 25.625 in
flange ID	B	= 23.5 in
thickness	t	= 3.75 in
bolting		= 20- 1.25 in dia
hub thickness	g_1	= 0.935 in
hub thickness	g_0	= 0.935 in
hub length	h	= 0.5 in
upper fillet weld	h1	= 0.25 in
lower fillet weld	h2	= 0.375 in
groove weld	w	= 0.25 in
length	e	= 0.25 in

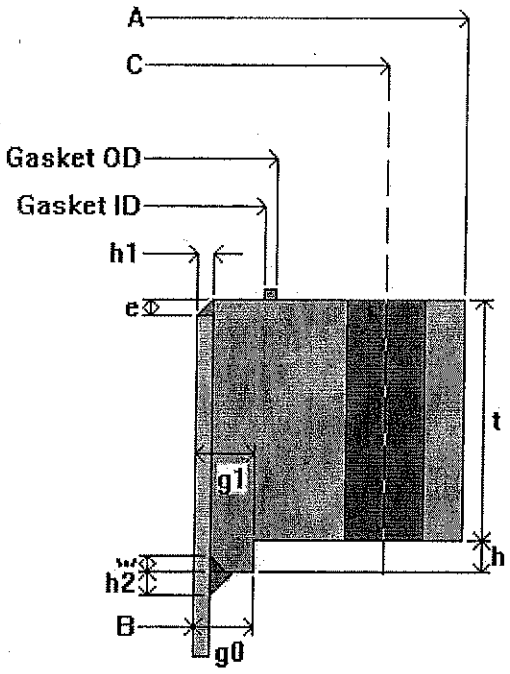

gasket factor	m	= 1
seating stress	y	= 200 psi
Gasket thickness	T	= 0.175 in
gasket description		Elastomers without fabric 75A or higher Shore Durometer

Note: this flange is an optional type calculated as integral.
ASME Interpretation VIII-1-83-115 has been applied.
The following values are used in the calculations: g_0 = shell/nozzle wall thickness, h = actual length of flange hub plus fillet weld leg attaching hub to shell/nozzle

Flange calculations for External Pressure + Weight Only per VIII-1, Appendix 2-11

Longitudinal bending moment on flange

$P_m = 16*M_b/(\pi*G^3)$
$= 16*46.8/(\pi*25.8125^3)$
$= 0.0139$ psi

Axial load on flange

$P_r = 4*F/(\pi*G^2)$
$= 4*673.12/(\pi*25.8125^2)$
$= 1.2863$ psi

Total design load on flange (used for H - ref. III-1 NC-3658.1)

$= P + P_s + P_m + P_r$
$= 15 + 0 + 0.0139 + 1.2863$
$= 16.3002$ psi

The static head of liquid has not been included in the total design load because the vessel is supported below the flange.

Gasket details from facing sketch 6, Column I

Ring gasket width $w = 0.1875$ in

$b_0 = w/8 = 0.0234$ in

Effective gasket seating width, $b = b_0 = 0.0234$ in

G = (gasket OD + gasket ID) / 2 = (26 + 25.625) / 2 = 25.8125 in

$h_G = (C - G)/2 = (29.5 - 25.8125)/2 = 1.8438$ in

$h_D = R + g_1/2 = 2.065 + 0.935/2 = 2.5325$ in

$h_T = (R + g_1 + h_G)/2 = (2.065 + 0.935 + 1.8438)/2 = 2.4219$ in

$H_p = 2*b*3.14*G*m*P$
$= 2*0.0234*3.14*25.8125*1*15$
$= 56.99$ lb_f

$H = 0.785*G^2*P$
$= 0.785*25.8125^2*16.3002$
$= 8{,}525.56$ lb_f

$H_D = 0.785*B^2*P$
$= 0.785*23.5^2*15$
$= 6{,}502.74$ lb_f

$H_T = H - H_D$
$= 8{,}525.56 - 6{,}502.74$
$= 2{,}022.81$ lb_f

$W_{m1} = H + H_p$
$= 8{,}525.56 + 56.99$
$= 8{,}582.55$ lb_f

$W_{m2} = 3.14*b*G*y$
$= 3.14*0.0234*25.8125*200$
$= 379.93\ lb_f$

Required bolt area, A_m = greater of A_{m1}, A_{m2} = 0.01519711 in²

$A_{m1} = 0.785*G^2*(P_m - P_r)/S_b = 0/25{,}000 = 0\ in^2$

$A_{m2} = W_{m2}/S_a = 379.93/25{,}000 = 0.0152\ in^2$

Total area for 20- 1.25 in dia bolts, corroded, $A_b = 18.58\ in^2$

$W = (A_{m2} + A_b)*S_a/2$
$= (0.0152 + 18.58)*25{,}000/2$
$= 232{,}439.97\ lb_f$

$M_o = H_D*(h_D - h_G) + H_T*(h_T - h_G)$
$= 6{,}502.74*(2.5325 - 1.8438) + 2{,}022.81*(2.4219 - 1.8438)$
$= 5{,}648.2$ lb-in

$M_g = W*h_G = 232{,}440*1.8438 = 428{,}561.2$ lb-in

Hub and Flange Factors

$h_0 = (B*g_0)^{1/2} = (23.5*0.2188)^{1/2} = 2.2673$ in

From FIG. 2-7.1, where K = A/B = 32/23.5 = 1.3617

T = 1.7709	Z = 3.3413	Y = 6.4482	U = 7.0859
$h/h_0 = 0.3859$	$g_1/g_0 = 4.1314$		
F = 0.8541	V = 0.1712	$e = F/h_0 = 0.3767$	

$d = (U/V)*h_0*g_0^2 = (7.085897/0.1712)*2.2673*0.2188^2$
$= 4.4916\ in^3$

Stresses at operating conditions - VIII-1, Appendix 2-7

f = 7.3586

$L = (t*e + 1)/T + t^3/d$
$= (3.75*0.3767 + 1)/1.77085 + 3.75^3/4.4916$
$= 13.10312$

$S_H = f*M_o/(L*g_1^2*B)$
$= 7.3586*5{,}648.2/(13.10312*0.9038^2*23.5)$
$= 165$ psi

$S_R = (1.33*t*e + 1)*M_o/(L*t^2*B)$
$= (1.33*3.75*0.3767 + 1)*5{,}648.2/(13.10312*3.75^2*23.5)$
$= 4$ psi

$S_T = Y*M_o/(t^2*B) - Z*S_R$
$= 6.4482*5{,}648.2/(3.75^2*23.5) - 3.3413*4$
$= 98$ psi

Allowable stress S_{fo} = 16,700 psi
Allowable stress S_{no} = 20,000 psi

S_T does not exceed S_{fo}
S_H does not exceed Min[$1.5*S_{fo}$, $1.5*S_{no}$] = 25,050 psi
S_R does not exceed S_{fo}
$0.5(S_H + S_R)$ = 85 psi does not exceed S_{fo}
$0.5(S_H + S_T)$ = 131 psi does not exceed S_{fo}

Stresses at gasket seating - VIII-1, Appendix 2-7

$S_H = f*M_g/(L*g_1^2*B)$
= 7.3586*428,561.2/(13.10312*0.9038²*23.5)
= 12,539 psi

$S_R = (1.33*t*e + 1)*M_g/(L*t^2*B)$
= (1.33*3.75*0.3767 + 1)*428,561.2/(13.10312*3.75²*23.5)
= 285 psi

$S_T = Y*M_g/(t^2*B) - Z*S_R$
= 6.4482*428,561.2/(3.75²*23.5) - 3.3413*285
= 7,410 psi

Allowable stress S_{fa} = 16,700 psi
Allowable stress S_{na} = 20,000 psi

S_T does not exceed S_{fa}
S_H does not exceed Min[$1.5*S_{fa}$, $1.5*S_{na}$] = 25,050 psi
S_R does not exceed S_{fa}
$0.5(S_H + S_R)$ = 6,412 psi does not exceed S_{fa}
$0.5(S_H + S_T)$ = 9,975 psi does not exceed S_{fa}

Flange rigidity per VIII-1, Appendix 2-14

$J = 52.14*V*M_o/(L*E*g_0^2*K_I*h_0)$
= 52.14*0.1712*428,561.2/(13.1031*28,300,000*0.2188²*0.3*2.2673)
= 0.3168806

The flange rigidity index J does not exceed 1; satisfactory.

ASME Section VIII Division 1, 2007 Edition, A08 Addenda

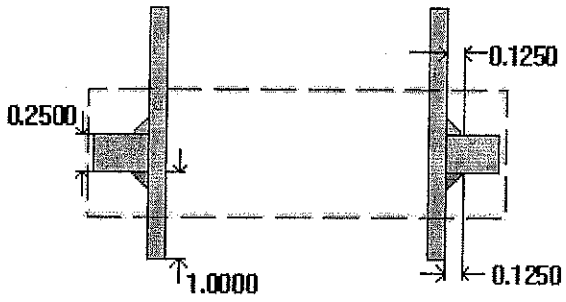

$t_{w(lower)}$ = 0 in
Leg_{41} = 0.125 in
Leg_{43} = 0.125 in
h_{new} = 1 in

Note: round inside edges per UG-76(c)

Located on:	Vacuum Vessel Shell
Liquid static head included:	0 psi
Nozzle material specification:	SA-240 304L (II-D p. 82, ln. 38)
Nozzle longitudinal joint efficiency:	1
Nozzle orientation:	60°
Local vessel minimum thickness:	0.2188 in
Nozzle center line offset to datum line:	8 in
End of nozzle to shell center:	13 in
Nozzle inside diameter, new:	1.75 in
Nozzle nominal wall thickness:	0.125 in
Nozzle corrosion allowance:	0 in
Projection available outside vessel, Lpr:	1 in
Internal projection, h_{new}:	1 in

This nozzle passes through a Category A joint.

Reinforcement Calculations for External Pressure

UG-37 Area Calculation Summary (in^2) For Pe = 56.26 psi @ 100 °F The opening is adequately reinforced							UG-45 Nozzle Wall Thickness Summary (in) The nozzle passes UG-45	
A required	A available	A_1	A_2	A_3	A_5	A welds	t_{req}	t_{min}
0.1806	0.1806	0.0293	0.0601	0.0652	--	0.026	0.0625	0.125

UG-41 Weld Failure Path Analysis Summary
Weld strength calculations are not required for external pressure

UW-16 Weld Sizing Summary			
Weld description	Required weld throat size (in)	Actual weld throat size (in)	Status
Nozzle to shell fillet (Leg_{41})	0.0875	0.0875	weld size is adequate
Nozzle to inside shell fillet (Leg_{43})	0.0875	0.0875 (corroded)	weld size is adequate

Calculations for external pressure 56.26 psi @ 100 °F

Parallel Limits of reinforcement per UG-40

L_R = MAX(d, R_n + (t_n - C_n) + (t - C))
= MAX(1.75, 0.875 + (0.125 - 0) + (0.2188 - 0))
= 1.75 in

Outer Normal Limits of reinforcement per UG-40

L_H = MIN(2.5*(t - C), 2.5*(t_n - C_n) + t_e)
= MIN(2.5*(0.2188 - 0), 2.5*(0.125 - 0) + 0)
= 0.3125 in

Inner Normal Limits of reinforcement per UG-40

L_I = MIN(2.5*(t - C), 2.5*(t_i - C_n - C))
= MIN(2.5*(0.2188 - 0), 2.5*(0.125 - 0 - 0))
= 0.3125 in

Nozzle required thickness per UG-28 t_{rn} = 0.0099 in

From UG-37(d)(1) required thickness t_r = 0.2017 in

Area required per UG-37(d)(1)

Allowable stresses: S_n = 16,700, S_v = 20,000 psi

f_{r1} = lesser of 1 or S_n/S_v = 0.835
f_{r2} = lesser of 1 or S_n/S_v = 0.835

$$A = 0.5*(d*t_r*F + 2*t_n*t_r*F*(1 - f_{r1}))$$
$$= 0.5*(1.75*0.2017*1 + 2*0.125*0.2017*1*(1 - 0.835))$$
$$= \underline{0.1806} \text{ in}^2$$

Area available from FIG. UG-37.1

A_1 = larger of the following= $\underline{0.0293}$ in^2

$$= d*(E_1*t - F*t_r) - 2*t_n*(E_1*t - F*t_r)*(1 - f_{r1})$$
$$= 1.75*(1*0.2188 - 1*0.2017) - 2*0.125*(1*0.2188 - 1*0.2017)*(1 - 0.835)$$
$$= 0.0293 \text{ in}^2$$

$$= 2*(t + t_n)*(E_1*t - F*t_r) - 2*t_n*(E_1*t - F*t_r)*(1 - f_{r1})$$
$$= 2*(0.2188 + 0.125)*(1*0.2188 - 1*0.2017) - 2*0.125*(1*0.2188 - 1*0.2017)*(1 - 0.835)$$
$$= 0.0111 \text{ in}^2$$

A_2 = smaller of the following= $\underline{0.0601}$ in^2

$$= 5*(t_n - t_{rn})*f_{r2}*t$$
$$= 5*(0.125 - 0.0099)*0.835*0.2188$$
$$= 0.1051 \text{ in}^2$$

$$= 5*(t_n - t_{rn})*f_{r2}*t_n$$
$$= 5*(0.125 - 0.0099)*0.835*0.125$$
$$= 0.0601 \text{ in}^2$$

A_3 = smaller of the following= $\underline{0.0652}$ in^2

$$= 5*t*t_i*f_{r2}$$
$$= 5*0.2188*0.125*0.835$$
$$= \underline{0.1142} \text{ in}^2$$

$$= 5*t_i*t_i*f_{r2}$$
$$= 5*0.125*0.125*0.835$$
$$= \underline{0.0652} \text{ in}^2$$

$$= 2*h*t_i*f_{r2}$$
$$= 2*1*0.125*0.835$$
$$= \underline{0.2088} \text{ in}^2$$

A_{41} = $Leg^2 * f_{r2}$
= $0.125^2 * 0.835$
= <u>0.013</u> in^2

A_{43} = $Leg^2 * f_{r2}$
= $0.125^2 * 0.835$
= <u>0.013</u> in^2

Area = $A_1 + A_2 + A_3 + A_{41} + A_{43}$
= 0.0293 + 0.0601 + 0.0652 + 0.013 + 0.013
= <u>0.1806</u> in^2

As Area >= A the reinforcement is adequate.

UW-16(d) Weld Check

t_{min} = lesser of 0.75 or t_n or t = 0.125 in
$t_{1(min)}$ or $t_{2(min)}$ = lesser of 0.25 or $0.7*t_{min}$ = <u>0.0875</u> in
$t_{1(actual)}$ = 0.7*Leg = 0.7*0.125 = 0.0875 in
The weld size t_1 is satisfactory.
$t_{2(actual)}$ = 0.7*Leg = 0.7*0.125 = 0.0875 in
The weld size t_2 is satisfactory.

$t_1 + t_2 = 0.175 >= 1.25*t_{min}$

The combined weld sizes for t_1 and t_2 are satisfactory.

UG-45 Nozzle Neck Thickness Check

Wall thickness per UG-45(a):	t_{r1} = 0.0099 in
Wall thickness per UG-45(b)(2):	t_{r2} = 0.0331 in
Wall thickness per UG-16(b):	t_{r3} = 0.0625 in
Standard wall pipe per UG-45(b)(4):	t_{r4} = 0.1348 in
The greater of t_{r2} or t_{r3}:	t_{r5} = 0.0625 in
The lesser of t_{r4} or t_{r5}:	t_{r6} = 0.0625 in

Required per UG-45 is the larger of t_{r1} or t_{r6} = <u>0.0625</u> in

Available nozzle wall thickness new, t_n = 0.125 in

The nozzle neck thickness is adequate.

% Forming strain - UHA-44(a)(2)(a)

EFE = $(50*t / R_f)*(1 - R_f / R_o)$
= $(50*0.125 / 0.9375)*(1 - 0.9375 / \infty)$
= 6.6667%

External Pressure, (Corroded & at 100 °F) UG-28(c)

L / D_o = 1.0417 / 2 = 0.5209
D_o / t = 2 / 0.0099 = 201.8611
From table G: A = 0.000924
From table HA-3: B = 8,518 psi

P_a = 4*B / (3*(D_o / t))
= 4*8518.4590 / (3*(2 / 0.0099))
= 56.27 psi

Design thickness for external pressure P_a = 56.27 psi

t_a = t + Corrosion = 0.0099 + 0 = 0.0099"

ASME Section VIII Division 1, 2007 Edition, A08 Addenda

$t_{w(lower)}$ = 0.1875 in
Leg_{41} = 0.25 in

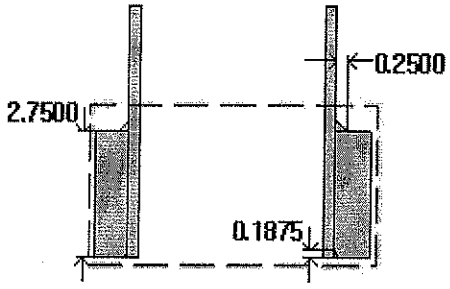

Note: round inside edges per UG-76(c)

Located on:	Bolted Cover #1
Liquid static head included:	0 psi
Nozzle material specification:	SA-312 TP304 Wld & smls pipe (II-D p. 90, ln. 15)
Nozzle longitudinal joint efficiency:	1
Nozzle description:	4" Sch 40S (Std)
Nozzle orientation:	0°
Local vessel minimum thickness:	2.75 in
Nozzle inside diameter, new:	4.026 in
Nozzle nominal wall thickness:	0.237 in
Nozzle corrosion allowance:	0 in
Projection available outside vessel, Lpr:	3.25 in
Distance to head center, R:	0 in

This nozzle passes through a Category A joint.

Reinforcement Calculations for External Pressure

UG-39 Area Calculation Summary (in^2) For Pe = 363.62 psi @ 100 °F The opening is adequately reinforced							UG-45 Nozzle Wall Thickness Summary (in) The nozzle passes UG-45	
A required	A available	A_1	A_2	A_3	A_5	A welds	t_{req}	t_{min}
4.1995	4.1996	3.9656	0.1715	--	--	0.0625	0.2074	0.2074

UG-41 Weld Failure Path Analysis Summary (lb_f) All failure paths are stronger than the applicable weld loads				
Weld load W	Weld load W_{1-1}	Path 1-1 strength	Weld load W_{2-2}	Path 2-2 strength
9,160.73	3,907.8	36,678.89	25,676.25	30,839.35

UW-16 Weld Sizing Summary			
Weld description	Required weld size (in)	Actual weld size (in)	Status
Nozzle to shell fillet (Leg_{41})	0.1659	0.175	weld size is adequate
Nozzle to shell groove (Lower)	0.1659	0.1875	weld size is adequate

Calculations for external pressure 363.62 psi @ 100 °F

Parallel Limits of reinforcement per UG-40

$$L_R = MAX(d, R_n + (t_n - C_n) + (t - C))$$
$$= MAX(4.026, 2.013 + (0.237 - 0) + (2.75 - 0))$$
$$= 5 \text{ in}$$

Outer Normal Limits of reinforcement per UG-40

$$L_H = MIN(2.5*(t - C), 2.5*(t_n - C_n) + t_e)$$
$$= MIN(2.5*(2.75 - 0), 2.5*(0.237 - 0) + 0)$$
$$= 0.5925 \text{ in}$$

Nozzle required thickness per UG-28 t_{rn} = 0.0923 in

From UG-34 required thickness t_r = 2.0862 in

Area required per UG-39

Allowable stresses: S_n = 20,000, S_v = 16,700 psi

f_{r1} = lesser of 1 or S_n/S_v = 1
f_{r2} = lesser of 1 or S_n/S_v = 1

A = 0.5*(d*t_r*F + 2*t_n*t_r*F*(1 - f_{r1}))
= 0.5*(4.026*2.0862*1 + 2*0.237*2.0862*1*(1 - 1))
= <u>4.1995</u> in²

Area available from FIG. UG-37.1

A_1 = larger of the following= <u>3.9656</u> in²

= d*(E_1*t - F*t_r) - 2*t_n*(E_1*t - F*t_r)*(1 - f_{r1})
= 4.026*(1*2.75 - 1*2.0862) - 2*0.237*(1*2.75 - 1*2.0862)*(1 - 1)
= 2.6725 in²

= 2*(t + t_n)*(E_1*t - F*t_r) - 2*t_n*(E_1*t - F*t_r)*(1 - f_{r1})
= 2*(2.75 + 0.237)*(1*2.75 - 1*2.0862) - 2*0.237*(1*2.75 - 1*2.0862)*(1 - 1)
= 3.9656 in²

A_2 = smaller of the following= <u>0.1715</u> in²

= 2*(t_n - t_{rn})*f_{r2}*L_{pr}
= 2*(0.237 - 0.0923)*1*3.25
= 0.9405 in²

= 5*(t_n - t_{rn})*f_{r2}*t_n
= 5*(0.237 - 0.0923)*1*0.237
= 0.1715 in²

A_{41} = Leg²*f_{r2}
= 0.25²*1
= <u>0.0625</u> in²

Area = A_1 + A_2 + A_{41}
= 3.9656 + 0.1715 + 0.0625
= <u>4.1996</u> in²

As Area >= A the reinforcement is adequate.

UW-16(d) Weld Check

t_{min} = lesser of 0.75 or t_n or t = 0.237 in
$t_{1(min)}$ or $t_{2(min)}$ = lesser of 0.25 or 0.7*t_{min} = <u>0.1659</u> in
$t_{1(actual)}$ = 0.7*Leg = 0.7*0.25 = 0.175 in
The weld size t_1 is satisfactory.
$t_{2(actual)}$ = 0.1875 in
The weld size t_2 is satisfactory.

$t_1 + t_2 = 0.3625 >= 1.25*t_{min}$

The combined weld sizes for t_1 and t_2 are satisfactory.

UG-45 Nozzle Neck Thickness Check

Wall thickness per UG-45(a):	$t_{r1} = 0.0923$ in
Wall thickness per UG-45(b)(2):	$t_{r2} = 2.0862$ in
Wall thickness per UG-16(b):	$t_{r3} = 0.0625$ in
Standard wall pipe per UG-45(b)(4):	$t_{r4} = 0.2074$ in
The greater of t_{r2} or t_{r3}:	$t_{r5} = 2.0862$ in
The lesser of t_{r4} or t_{r5}:	$t_{r6} = 0.2074$ in

Required per UG-45 is the larger of t_{r1} or t_{r6} = <u>0.2074</u> in

Available nozzle wall thickness new, $t_n = 0.875*0.237 = 0.2074$ in

The nozzle neck thickness is adequate.

Allowable stresses in joints UG-45(c) and UW-15(c)

Groove weld in tension:	0.74*16,700 = 12,358 psi
Nozzle wall in shear:	0.7*20,000 = 14,000 psi
Inner fillet weld in shear:	0.49*16,700 = 8,183 psi

Strength of welded joints:

(1) Inner fillet weld in shear
$(\pi/2)$*Nozzle OD*Leg*S_i = $(\pi/2)$*4.5*0.25*8,183 = 14,460.55 lb_f

(3) Nozzle wall in shear
$(\pi/2)$*Mean nozzle dia*t_n*S_n = $(\pi/2)$*4.263*0.237*14,000 = 22,218.34 lb_f

(4) Groove weld in tension
$(\pi/2)$*Nozzle OD*t_w*S_g = $(\pi/2)$*4.5*0.1875*12,358 = 16,378.79 lb_f

Loading on welds per UG-41(b)(1)

$$W = (A - A_1 + 2*t_n*f_{r1}*(E_1*t - F*t_r))*S_v$$
$$= (4.1995 - 3.9656 + 2*0.237*1*(1*2.75 - 1*2.0862))*16{,}700$$
$$= \underline{9{,}160.73}\ lb_f$$

$$W_{1\text{-}1} = (A_2 + A_5 + A_{41} + A_{42})*S_v$$
$$= (0.1715 + 0 + 0.0625 + 0)*16{,}700$$
$$= \underline{3{,}907.8}\ lb_f$$

$$W_{2\text{-}2} = (A_2 + A_3 + A_{41} + A_{43} + 2*t_n*t*f_{r1})*S_v$$
$$= (0.1715 + 0 + 0.0625 + 0 + 2*0.237*2.75*1)*16{,}700$$
$$= \underline{25{,}676.25}\ lb_f$$

Load for path 1-1 lesser of W or W_{1-1} = 3907.8 lb_f
Path 1-1 through (1) & (3) = 14,460.55 + 22,218.34 = <u>36,678.89</u> lb_f
Path 1-1 is stronger than W_{1-1} so it is acceptable per UG-41(b)(1).

Load for path 2-2 lesser of W or W_{2-2} = 9160.73 lb_f
Path 2-2 through (1), (4) = 14,460.55 + 16,378.79 = <u>30,839.35</u> lb_f
Path 2-2 is stronger than W so it is acceptable per UG-41(b)(2).

External Pressure, (Corroded & at 100 °F) UG-28(c)

L / D_o = 3.25 / 4.5 = 0.7222

D_o / t = 4.5 / 0.0923 = 48.7536

From table G: A = 0.005779

From table HA-1: B = 13,296 psi

P_a = 4*B / (3*(D_o / t))
= 4*13295.7129 / (3*(4.5 / 0.0923))
= 363.62 psi

Design thickness for external pressure P_a = 363.62 psi

t_a = t + Corrosion = 0.0923 + 0 = 0.0923"

Legs #1

Leg material:			
Leg description:			3 inch sch 40 pipe
Number of legs:	N =	3	
Overall length:		13.5	in
Base to girth seam length:		11.5	in
Bolt circle:		26	in
Anchor bolt size:		0.375	inch series 8 threaded
Anchor bolt material:			
Anchor bolts/leg:		1	
Anchor bolt allowable stress:	S_b =	20,000	psi
Anchor bolt corrosion allowance:		0	in
Anchor bolt hole clearance:		0.375	in
Base plate width:		4	in
Base plate length:		4	in
Base plate thickness:		0.375	in (0.022 in required)
Base plate allowable stress:		24,000	psi
Foundation allowable bearing stress:		1,658	psi
Effective length coefficient:	K =	1.2	
Coefficient:	C_m =	0.85	
Leg yield stress:	F_y =	36,000	psi
Leg elastic modulus:	E =	29,000,000	psi
Leg to shell fillet weld:		0.25	in (0.0098 in required)
Legs braced:		No	

Note: The support attachment point is assumed to be 1 in up from the cylinder circumferential seam.

Loading	Force attack angle °	Leg position °	Axial end load lb_f	Shear resisted lb_f	Axial f_a psi	Bending f_{bx} psi	Bending f_{by} psi	Ratio H_{1-1}	Ratio H_{1-2}
Governing Condition		0	479.0	0.0	215	486	0	0.0275	0.0304
		120	484.2	0.0	217	491	0	0.0278	0.0307
Weight operating corroded Moment = 3.9 lb-ft	0	240	484.2	0.0	217	491	0	0.0278	0.0307

Loading	Force attack angle °	Leg position °	Axial end load lb_f	Shear resisted lb_f	Axial f_a psi	Bending f_{bx} psi	Bending f_{by} psi	Ratio H_{1-1}	Ratio H_{1-2}
Weight empty corroded		0	479.0	0.0	215	486	0	0.0275	0.0304
		120	484.2	0.0	217	491	0	0.0278	0.0307
Moment = 3.9 lb-ft	0	240	484.2	0.0	217	491	0	0.0278	0.0307

Loading	Force attack angle °	Leg position °	Axial end load lb_f	Shear resisted lb_f	Axial f_a psi	Bending f_{bx} psi	Bending f_{by} psi	Ratio H_{1-1}	Ratio H_{1-2}
Weight vacuum corroded		0	479.0	0.0	215	486	0	0.0275	0.0304
		120	484.2	0.0	217	491	0	0.0278	0.0307
Moment = 3.9 lb-ft	0	240	484.2	0.0	217	491	0	0.0278	0.0307

Leg Calculations (AISC manual ninth edition)

Axial end load, P_1 (Based on vessel total bending moment acting at leg attachment elevation)

$P_1 = W/N + 48*M_t/(N*D)$
$= 1{,}444.91/3 + 48*3.9/(3*24)$
$= \underline{484.24}$ lb_f

Allowable axial compressive stress, F_a (AISC chapter E)

$C_c = Sqr(2*\pi^2*E/F_y)$
$= Sqr(2*\pi^2*29{,}000{,}000/36{,}000)$
$= 126.0993$

$K*l/r = 1.2*10/1.1637 = 10.3117$

$F_a = 1 * (1 - (Kl/r)^2/(2*C_c^2))*F_y / (5/3 + 3*(Kl/r)/(8*C_c)-(Kl/r)^3/(8*C_c^3))$
$= 1 * (1 - (10.3117)^2/(2*126.0993^2))*36{,}000 / (5/3 + 3*(10.3117)/(8*126.0993)-(10.3117)^3/(8*126.0993^3))$
$= 21{,}140$ psi

Allowable axial compression and bending (AISC chapter H)

$F'_{ex} = 1*12*\pi^2*E/(23*(Kl/r)^2)$
$= 1*12*\pi^2*29{,}000{,}000/(23*(10.3117)^2)$
$= 1{,}404{,}400$ psi

$F'_{ey} = 1*12*\pi^2*E/(23*(Kl/r)^2)$
$= 1*12*\pi^2*29{,}000{,}000/(23*(10.3117)^2)$
$= 1{,}404{,}400$ psi

$F_b = 1*0.66*F_y$
$= 1*0.66*36{,}000$
$= 23{,}760$ psi

Compressive axial stress

$f_a = P_1/A$
$= 484.24/2.23$
$= \underline{217}$ psi

Bending stresses

$f_{bx} = F*\cos(\alpha)*L/(I_x/C_x) + P_1*E_{cc}/(I_x/C_x)$
$= 0*abs(\cos(120))*10/(3.02/1.75) + 484.24*1.75/(3.02/1.75)$
$= \underline{491}$ psi

$f_{by} = F*\sin(\alpha)*L/(I_y/C_y)$
$= 0*\sin(120)*10/(3.02/1.75)$
$= \underline{0}$ psi

AISC equation H_{1-1}

$H_{1-1} = f_a/F_a + C_{mx}*f_{bx}/((1 - f_a/F'_{ex})*F_{bx}) + C_{my}*f_{by}/((1 - f_a/F'_{ey})*F_{by})$
$= 217/21{,}140 + 0.85*491/((1 - 217/1{,}404{,}400)*23{,}760) + 0.85*0/((1 - 217/1{,}404{,}400)*23{,}760)$
$= \underline{0.0278}$

AISC equation H_{1-2}

$H_{1-2} = f_a/(0.6*1*F_y) + f_{bx}/F_{bx} + f_{by}/F_{by}$
$= 217/(0.6*1*36{,}000) + 491/23{,}760 + 0/23{,}760$
$= \underline{0.0307}$

3, 3 inch sch 40 pipe legs are adequate.

Anchor bolts - Weight operating corroded condition governs

Tensile loading per leg (1 bolt per leg)

$R = 48*M/(N*BC) - W/N$
$= 48*3.9/(3*26) - 1{,}444.91/3$
$= -479.23\ lb_f$
There is no net uplift (R is negative).

0.375 inch series 8 threaded bolts are satisfactory.

Check the leg to vessel fillet weld, Bednar 10.3, Weight operating corroded governs

Note: continuous welding is assumed for all support leg fillet welds.

$Z_w = (2*b*d + d^2)/3$
$= (2*1.8028*3.5 + 3.5^2)/3$
$= 8.2898\ in^2$

$J_w = (b + 2*d)^3/12 - d^2*(b + d)^2/(b + 2*d)$
$= (1.8028 + 2*3.5)^3/12 - 3.5^2*(1.8028 + 3.5)^2/(1.8028 + 2*3.5)$
$= 17.7119\ in^3$

$E = d^2/(b + 2*d)$
$= 3.5^2/(1.8028 + 2*3.5)$
$= 1.391607\ in$

Governing weld load $f_x = Cos(120)*0 = 0\ lb_f$
Governing weld load $f_y = Sin(120)*0 = 0\ lb_f$

$f_1 = P_1/L_{weld}$
$= 484.24/8.8028$
$= 55.01\ lb_f/in$ (V_L direct shear)

$f_2 = f_y*L_{leg}*0.5*b/J_w$
$= 0*10*0.5*1.8028/17.7119$
$= 0\ lb_f/in$ (V_L torsion shear)

$f_3 = f_y/L_{weld}$
$= 0/8.8028$
$= 0\ lb_f/in$ (V_c direct shear)

$f_4 = f_y*L_{leg}*E/J_w$
$= 0*10*1.3916/17.7119$
$= 0\ lb_f/in$ (V_c torsion shear)

$f_5 = f_x*L_{leg}/Z_w$
$= 0*10/8.2898$
$= 0\ lb_f/in$ (M_L bending)

$f_6 = f_x/L_{weld}$
$= 0/8.8028$
$= 0\ lb_f/in$ (Direct outward radial shear)

$f = Sqr((f_1 + f_2)^2 + (f_3 + f_4)^2 + (f_5 + f_6)^2)$
$= Sqr((55.01 + 0)^2 + (0 + 0)^2 + (0 + 0)^2)$
$= 55.01$ lb_f/in (Resultant shear load)

Required leg to vessel fillet weld leg size (welded both sides + top)

$t_w = f / (0.707*0.55*S_a)$
$= 55.01 / (0.707*0.55*14,400)$
$= \underline{0.0098}$ in

The 0.25 in leg to vessel attachment fillet weld size is adequate.

Base plate thickness check, AISC 3-106

$f_p = P/(B*N)$
$= 484.04/(4*4)$
$= 30$ psi

$t_b =(N - (d - t_L))/2*Sqr(3*f_p/S_b)$
$=(4 - (3.5 - 0.216))/2*Sqr(3*30/24,000)$
$= \underline{0.022}$ in

The base plate thickness is adequate.

Check the leg to vessel attachment stresses, WRC-107 (Weight operating corroded governs)

Applied Loads

Radial load:	$P_r =$	0	lb_f
Circumferential moment:	$M_c =$	0	lb_f-in
Circumferential shear:	$V_c =$	0	lb_f
Longitudinal moment:	$M_L =$	838.31	lb_f-in
Longitudinal shear:	$V_L =$	479.03	lb_f
Torsion moment:	$M_t =$	0	lb_f-in
Internal pressure:	$P =$	0	psi
Mean shell radius:	$R_m =$	11.875	in
Local shell thickness:	$t =$	0.25	in
Shell yield stress:	$S_y =$	16,000	psi

Maximum stresses due to the applied loads at the leg edge (includes pressure)

$R_m / t = 11.875 / 0.25 = 47.5$

$C_1 = 0.9014$, $C_2 = 2.778$ in

Local circumferential pressure stress = P^*R_i/t =0 psi

Local longitudinal pressure stress = $P^*R_i/2t$ =0 psi

Maximum combined stress (P_L+P_b+Q) = -2,151 psi
Allowable combined stress (P_L+P_b+Q) = +-3*S = +-43,200 psi

Note: The allowable combined stress (P_L+P_b+Q) is based on the strain hardening characteristics of this material.

The maximum combined stress (P_L+P_b+Q) is within allowable limits.

Maximum local primary membrane stress (P_L) = -554 psi
Allowable local primary membrane (P_L) = +-1.5*S = +-21,600 psi

The maximum local primary membrane stress (P_L) is within allowable limits.

Stresses at the leg edge per WRC Bulletin 107										
Figure	**value**	**β**	**A_u**	**A_l**	**B_u**	**B_l**	**C_u**	**C_l**	**D_u**	**D_l**
3C*	4.317	0.1909	0	0	0	0	0	0	0	0
4C*	7.2195	0.1573	0	0	0	0	0	0	0	0
1C	0.1034	0.1189	0	0	0	0	0	0	0	0
2C-1	0.0689	0.1189	0	0	0	0	0	0	0	0
3A*	1.6551	0.1105	0	0	0	0	0	0	0	0
1A	0.087	0.1321	0	0	0	0	0	0	0	0
3B*	5.2076	0.1608	-554	-554	554	554	0	0	0	0
1B-1	0.0337	0.143	-1,597	1,597	1,597	-1,597	0	0	0	0
Pressure stress*			0	0	0	0	0	0	0	0
Total circumferential stress			-2,151	1,043	2,151	-1,043	0	0	0	0
Primary membrane circumferential stress*			-554	-554	554	554	0	0	0	0
3C*	5.2992	0.1573	0	0	0	0	0	0	0	0
4C*	6.6487	0.1909	0	0	0	0	0	0	0	0
1C-1	0.0785	0.1633	0	0	0	0	0	0	0	0
2C	0.0458	0.1633	0	0	0	0	0	0	0	0
4A*	2.4608	0.1105	0	0	0	0	0	0	0	0
2A	0.0399	0.1701	0	0	0	0	0	0	0	0
4B*	1.9064	0.1608	-333	-333	333	333	0	0	0	0
2B-1	0.0386	0.1851	-1,413	1,413	1,413	-1,413	0	0	0	0
Pressure stress*			0	0	0	0	0	0	0	0
Total longitudinal stress			-1,746	1,080	1,746	-1,080	0	0	0	0
Primary membrane longitudinal stress*			-333	-333	333	333	0	0	0	0
Shear from M_t			0	0	0	0	0	0	0	0

Circ shear from V_c	0	0	0	0	0	0	0	0
Long shear from V_L	0	0	0	0	-172	-172	172	172
Total Shear stress	0	0	0	0	-172	-172	172	172
Combined stress (P_L+P_b+Q)	-2,151	1,080	2,151	-1,080	344	344	344	344

Note: * denotes primary stress.

eden CRYOGENICS

Eden Cryogenics LLC
8449 Rausch Drive
Plain City, Ohio 43064

TRL - 1978B
1977B
1979B

Pressure Test Report

Work Order: BC 02128 Drawing Number: 5820-01, 5820-02, 5820-03

Customer: FERMILAB

Description: 5820-01, 5820-02, 5820-03 - INNER vessels

Project Engineer: Jim M. Test Performed By: R. Basham LII

Specification: BC 101-070-002 Disposition By: R. Basham LII

Parameters: GAUGE S/N G-14 NEXT CALB 8/18/10

Pneumatic: ✓ Hydrostatic: _____ PSI: 188 TEST / 165 DESIGN Time (min.): See Below

Conclusion:

TIE all 3 vessels Together and pressurize to 188 psi, Reduce to 165 psi and Visually Inspect, Bubble test all vessels

5820-01 START 12:43 PM FINISH ~~Finish~~ 188 psi 1:08 PM
165 psi Bubble test 1:13 PM - 1:28 PM
5820-02 START 12:43 PM FINISH 188 psi 1:08 PM
165 psi Bubble TEST 1:13 PM - 1:28 PM
5820-03 START 12:43 PM FINISH 188 psi 1:08 PM
165 psi Bubble test 1:13 PM - 1:28 PM

No Reportable INDICATIONS
Accept (Qty-3)

Brad Leesholt AI HSB
3/25/10

Signature: Randy Basham LII Date: 3/25/10

Eden Cryogenics LLC
8445 Rausch Drive
Plain City, Ohio 43064

Penetrant Inspection Report

Work Order:	BC 02128	Drawing Number:	5820-01
Contract Number:	Fermi lab	Traveler #	1978 B #1
Weld Description:	inner Vessel		JT-3-S, 12-16
Project Engineer:	~~P. Kazmierczak~~ JHM	Test Performed By:	E. Meadows
Specification:	BC 101-003-101	Disposition By:	E. Meadows

Penetrant:	Magnaflux SKL-SP	10 MIN	Batch No:	07LIIK
Cleaner:	Magnaflux SKC-S	5 MIN	Batch No:	08H05K
Developer:	Magnaflux SKD-S2	15 MIN	Batch No:	09E06K

Conclusion:

JT- 3-S, 12-16 / Sengh PASS /

NO REPORTABLE INDICATION FOUND AT TIME OF INSPECTION EM

✓ **ACCEPT**

Signature: E. J. Meadows L# Date: 3-11-10

BS 3/25/10

Eden Form 1016-11/07

C:\Documents and Settings\rbasham\Desktop\B SHIFT\PT\Penetrant Inspection Report.doc

Trw - 2010 - 03

Eden Cryogenics LLC
8445 Rausch Drive
Plain City, Ohio 43064

eden CRYOGENICS

Combination Pressure/Mass Spectrometer Leak Test Inspection Data Sheet

Work Order #: Bc-02128 Eden Specification #: Bc-101-050-010 Rev-B Test Equipment: MS-40 #1 / G-14

Calibrated Leak Serial No. / Rate: 0894 / 1.9X10^{-8} AE Test Article: 5800-03 Lar Purifier

EVENT	START	END	MASS SPEC INDICATION *	MASS SPEC LEAK**	TEST PRESS, HOLD TIME, COMMENTS	DECAY NO	DECAY YES
1			1.9X10^{-8} AE				
2			0.1X10^{-10} AE				
3			2.5X10^{-9} AE				
4	12:43	12:48	2.5X10^{-9} AE				
5	12:49	12:51	2.0X10^{-9} AE		47PSI hold for 2min	✓	
5	12:52	12:54	2.0X10^{-9} AE		94 PSI	✓	
5	12:55	12:57	2.0X10^{-9} AE		141PSI	✓	
5	12:58	1:08	2.0X10^{-9} AE		165psi Hold 10min	✓	
6, 7	1:09	1:11	2.0X10^{-9} AE		Reduce to 150psi	✓	
8	1:14	1:19	2.1X10^{-9} AE		Spray 2min, Set for 5min	✓	
9	1:20	1:21	2.1X10^{-9} AE				
10	1:22	1:23	1.9X10^{-8} AE				

Mass Spectrometer Leak Test:			Pressurization Leak Test:		
	✓	Accept (No Reportable Indications)		✓	Accept (No Reportable Indications)
		Reject			Reject

EVENTS

1	Calibrated Leak (start)	5	Internal Piping Pressure (PSI)	9	Final Reading
2	Minimum Detectable Leak (MDL)	6	Visually Inspect Exposed Inner Line Welds	10	Calibrated Leak (finish)
3	Background Helium (after tie in)	7	Bubble Test Exposed Inner Line Welds		
4	Spray Open Vacuum Enclosure	8	Spray Bagged System		

* Actual Reading (Maximum Acceptable Leak Rate: 1 x 10-9 std. cc/sec A.E.)

** Difference between MDL (background) indication and present reading

Authorized Signature R. Bashaw LII 6/15/10 Date

LII 6/15/10

Eden Form 1013-09/08

M:\Admin\Forms\MSLT-PSI VJ Pipe Inspection Data Sheet.doc

v3.10.15 404 / 424

TRAVELER # 2010-02

Eden Cryogenics LLC
8445 Rausch Drive
Plain City, Ohio 43064

eden

Combination Pressure/Mass Spectrometer Leak Test Inspection Data Sheet

Work Order #: BC-02128 Eden Specification #: BC101-050-010(Rev C) Test Equipment: MS-40 #1 / Gauge (Next Cal 8-18-10) 6-14

Calibrated Leak Serial No. / Rate: S/N 0894 1.6 x 10^-8 A.E. @ 21°C Test Article: -5800-02 LAR Purifier Vessel

EVENT	START	END	MASS SPEC INDICATION *	MASS SPEC LEAK**	TEST PRESS, HOLD TIME, COMMENTS	DECAY NO	DECAY YES
1	7:48 a	7:51 a	1.5 x 10^-8 A.E.				
2	7:51 a	7:53 a	0.5 x 10^-10 A.E.				
3	7:53 a	8:00 a	5.3 x 10^-9 A.E.				
4	8:00 a	8:10 a	2.6 x 10^-9 A.E.				
5	8:10 a	8:16 a	1.0 x 10^-9 A.E.		41.25 psi - Held 2 min.	✓	
	8:16 a	8:19 a	0.8 x 10^-9 A.E.		82.50 psi - "	✓	
	8:19 a	8:22 a	0.7 x 10^-9 A.E.		123.75 psi - "	✓	
	8:22 a	8:33 a	5.5 x 10^-10 A.E.		165.00 psi - Held 10 min.	✓	
5	8:33 a	8:34 a	5.3 x 10^-10 A.E.		Reduce to design (150 psi)	✓	
6, 7	8:34 a	8:40 a	5.0 x 10^-10 A.E.		Visual + Bubble Test	✓	
8	8:50 a	8:55 a	2.8 x 10^-10 A.E.		(Spray 1 min. Sit 4 min.)	✓	
9	8:55 a	8:56 a	2.8 x 10^-10 A.E.				
10	8:56 a	8:59 a	1.8 x 10^-8 A.E.				

Mass Spectrometer Leak Test:			Pressurization Leak Test:		
	X	Accept (No Reportable Indications)		X	Accept (No Reportable Indications)
		Reject			Reject

EVENTS

1	Calibrated Leak (start)	5	Internal Piping Pressure (PSI)	9	Final Reading
2	Minimum Detectable Leak (MDL)	6	Visually Inspect Exposed Inner Line Welds	10	Calibrated Leak (finish)
3	Background Helium (after tie in)	7	Bubble Test Exposed Inner Line Welds		
4	Spray Open Vacuum Enclosure	8	Spray Bagged System		

* Actual Reading (Maximum Acceptable Leak Rate: 1 x 10-9 std. cc/sec A.E.)

** Difference between MDL (background) indication and present reading

Authorized Signature: [signature] LII R. Bashaw LII 6/24/10

Date: 6-24-10

Eden Cryogenics LLC
8445 Rausch Drive
Plain City, Ohio 43064

Penetrant Inspection Report

Work Order:	BC 02128	Drawing Number:	5820-02
Contract Number:	Fermi lab	Traveler #	1978 ~~A~~ B 2
Weld Description:	inner Vessel		JT- 3-5, 12-16
Project Engineer:	~~P. Kazmierczak~~ JHM	Test Performed By:	E. Meadows
Specification:	BC 101- 003 -101	Disposition By:	E. Meadows

Penetrant:	Magnaflux SKL-SP	10 MIN	Batch No:	07LIIK
Cleaner:	Magnaflux SKC-S	5 MIN	Batch No:	08H05K
Developer:	Magnaflux SKD-S2	15 MIN	Batch No:	09E06K

Conclusion:

JT- 3 — 5, 12 — 16 / dingh PASS /

NO REPORTABLE INDICATION FOUND AT TIME OF INSPECTION Elm

✓ **ACCEPT**

Signature: E. L. Meadows II

Date: 3-12-10

3/26/10

Eden Form 1016-11/07

C:\Documents and Settings\rbasham\Desktop\B SHIFT\PT\Penetrant Inspection Report.doc

Traw 6/10-01

Eden Cryogenics LLC
8445 Rausch Drive
Plain City, Ohio 43064

eden CRYOGENICS

Combination Pressure/Mass Spectrometer Leak Test Inspection Data Sheet

Work Order #: BC-07188 Eden Specification #: BC-101-050-010 (Rev B) Test Equipment: MS-40 #1 / G-14

Calibrated Leak Serial No. / Rate: 0894 / 1.5 x 10 -8 AE Test Article: 5800-01 LAR Purifier

EVENT	START	END	MASS SPEC INDICATION *	MASS SPEC LEAK**	TEST PRESS, HOLD TIME, COMMENTS	DECAY NO	DECAY YES
1			1.5 x 10 -8 AE				
2			0.1 x 10 -10 AE				
3			.20 x 10 -10 AE				
4	10:46	10:52	.20 x 10 -10 AE				
5	10:55	10:57	.20 x 10 -10 AE		47 psi Hold 2 min	✓	
5	10:59	11:04	.20 x 10 -10 AE		94 psi	✓	
5	11:05	11:07	.20 x 10 -10 AE		141 psi	✓	
5	11:08	11:18	.20 x 10 -10 AE		165 psi Hold 10 min	✓	
6,7	11:18	11:23	.20 x 10 -10 AE		Reduce to 150 psi	✓	
8	11:24	11:29	.20 x 10 -10 AE		Spray 2 min, Set 5 min	✓	
9		11:29	.20 x 10 -10 AE				
10		11:32	1.5 x 10 -8				

Mass Spectrometer Leak Test:	✓	Accept (No Reportable Indications)	Pressurization Leak Test:	✓	Accept (No Reportable Indications)
		Reject			Reject

EVENTS

1	Calibrated Leak (start)	5	Internal Piping Pressure (PSI)	9	Final Reading
2	Minimum Detectable Leak (MDL)	6	Visually Inspect Exposed Inner Line Welds	10	Calibrated Leak (finish)
3	Background Helium (after tie in)	7	Bubble Test Exposed Inner Line Welds		
4	Spray Open Vacuum Enclosure	8	Spray Bagged System		

* Actual Reading (Maximum Acceptable Leak Rate: 1 x 10-9 std. cc/sec A.E.)

** Difference between MDL (background) indication and present reading

Authorized Signature R. Bashaw LII 6/10/10 Date 6/10/10

TRAV # 1979

Eden Cryogenics LLC
8445 Rausch Drive
Plain City, Ohio 43064

Penetrant Inspection Report

Work Order: BC - 02128 Drawing Number: BC. 02128 - 5820-03

Contract Number: FERMILAB

Weld Description: See Below

Project Engineer: J. M. Test Performed By: M. LaPorta

Specification: BC 101-003-101 Disposition By: R. Basham LII

Penetrant: Magnaflux SKL-SP Batch No: 07L11K 06820

Cleaner: Magnaflux SKC-S Batch No: 08H05K 005352

Developer: Magnaflux SKD-S2 Batch No: 09E06K 07683

Conclusion: 2128-03 vessel

JT-02128-5820- 3,4,5,12,13,14,15,16 Single Pass

Cleaner 5 min

Penetrant 10 min

Cleaner 5 min

Developer 15 min

Results; No Reportable Indications, Accept All Joints

Signature: R. Basham LII 3/11/10

Date: 3/11/10

BB 3/25/10

M:\Admin\Forms\Penetrant Inspection Report.doc

Eden Form 1016-11/07