FESHM 5031.1 PIPING ENGINEERING NOTE FORM

Prepared by: Russ Rucinski Preparation Date: Feb. 12, 2015

Piping System Title: LArIAT cryo system at MC7

Lab Location: Meson Center Enclosure 7 Lab Location code: 426

Purpose of system / System description: Fill & maintain LArIAT detector cryostat with liquid argon.

Piping System ID Number: TeamCenter EN01747

Appropriate governing piping code: B31.3

Fluid Service Category (if B31.3): Category-D / Normal / Category-M / High Pressure

Fluid Contents: Liquid Argon, Gas Argon

Design Pressure: 30 psig piping connected to cryostat
100 psig LAr piping up to HV-300-A and HV-303-A
100 psig regeneration piping and analyzer rack
150 psig particulate filter

Design Temperature: LAr piping, -325 F to 100 F
Regeneration piping, -20 F to 100 F

Piping Materials: Stainless steel

Drawing Numbers: Flow Schematic is 9212.100-ME-497449, 3 sheets
MC7 layout is 9211.520-ME-493650

Designer/Manufacturer: Fermilab, PPD/MD

Test Pressure: 1.1(45 psia) = 49.5 psia = 35 psig piping connected to cryostat
1.1(115 psia) = 126.5 psia =112 psig supply piping
1.1(165 psia) = 181.5 psia = 167 psig particulate filter

Test Fluid: Argon gas Test Date: February 24, 2015

Statement of Compliance

Is this piping system considered exceptional? Yes ____ No_X_
If "Yes", follow the requirements for an Extended Engineering Note for Exceptional Piping Systems.

Reviewed by: _____
(Print Name)
Signature: _____Date: _____

Signature: See Teamcenter Workflow Approval

D/S Head's Signature: _____Date: _____
Signature: See Teamcenter Workflow Approval

The following signatures are required for exceptional piping systems:

ES&H Director's Signature: _____Date: _____

Director's Signature or Designee: _____Date: _____

Pipe Characteristics

Size: 1” sch. 10 stainless pipe Length: ~ 44 feet Total Volume: < 1 ft^3
Size: ½” sch. 10 stainless pipe
Size: 1” OD tube x 0.095” wall, stainless, regeneration piping
Size: 0.25” OD x 0.035” wall, stainless, instrumentation tubing

Relief Valve Information

Type: Direct Spring loaded Manufacturer: Circle Seal & Anderson Greenwood & Rockwood Swendeman

Set Pressure:	100 psig (PSV-591-A, LAr supply)	Relief Capacity: 366 scfm air
	100 psig (PSV-406-H, Regen gas)	Relief Capacity: 282 scfm air
	100 psig (PSV-109-A, filter)	Relief Capacity: 282 scfm air
	15 psig (PSV-202-A, cryostat)	Relief Capacity 50 scfm air @ 19 psig
	150 psig (PSV-309-A, filter)	Relief Capacity: 72 scfm air

Relief Design Code: CGA S1.3 and ASME

Is the system designed to meet the identified governing code? Yes / No

System Documentation

Process and Instrumentation diagram appended? Yes / No

Process and Instrumentation component list appended? Yes / No

Is an operating procedure necessary for safe operation? Yes / No

Fabrication Quality Assurance

List vendor(s) for assemblies welded/brazed off site: Applied Energy Systems provided the Gas Analyzer distribution rack. Reference MicroBooNE-doc-2250-v1

List welder(s) for assemblies welded/brazed in-house: Dan Knight, Fermilab Technical Division Welders.

Are welder qualification records available for in-house welded/brazed assemblies? Yes / No
If yes, append documents or make available to reviewer.

Are all quality verification records required by the identified code available? Yes / No
(e.g. examiner's certification, inspector's certification, test records, etc.)
If yes, append documents or make available to reviewer.

TABLE OF CONTENTS

Piping Engineering Note Form (precedes this Table of Contents)

Description of System

Flow Schematic

Components List

Piping Analysis

Relief Valve Capacity Requirements

Flexibility Analysis

Welder Qualification Records

In-Process Weld Inspection forms

Pressure Test

Description of System

The purpose of this piping system is to deliver liquid argon to a cryostat containing a particle tracking detector. Liquid argon is supplied from a vendor rented dewar. The liquid argon piping transfers the liquid from the vendor dewar to a filter, and then into the cryostat that contains the particle detector. The liquid level is controlled such that only gas leaves the cryostat and is vented outdoors.

The normal operating pressure of the vendor dewar is expected to be about 60 psig. The normal operating pressure of the cryostat will be 3 psig. The peak flow of liquid argon will occur during cool down and filling at a rate of about 100 liquid liters per hour. After the cryostat is full, the 300 watts heat load of the system necessitates a make-up flow rate of only 5 liquid liters per hour. The liquid argon dewar is 500 gallon (1893 liters) capacity. A weekly fill is expected from the vendor.

The liquid argon dewar is also the source of gas argon used for valve actuators (LCV-105-A and PCV-220-A) and for filter regeneration purposes. The peak flow rates for regeneration are 500 scfh. A tube trailer is also used for filter regeneration and provides a 2.5%H2, balance argon gas mix at a pressure of about 60 psig and maximum peak flow of 500 scfh.

The design pressure of the liquid argon piping and regeneration piping is 100 psig, up to the cryostat and 30 psig for piping connected to the cryostat. Standard piping components, 1” schedule 10 and ½” schedule 10 stainless steel pipe are used for the supply piping with the exception of 2.75” OD conflat flanges at the filter. Foam insulation is used on the cryogenic lines except for the filters and cryostat which are vacuum jacketed.

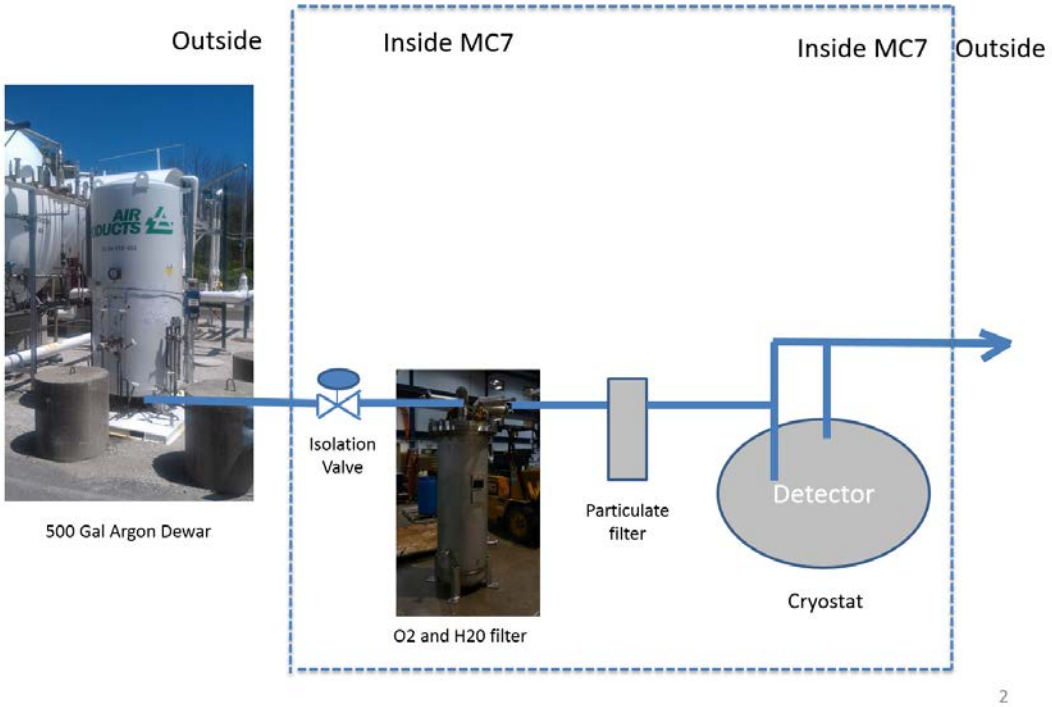

Figure 1. Simplifed flow schematic of the system.

Flow Schematics, FNAL drg. 9212.100-ME-497449, sheets 1 thru 3

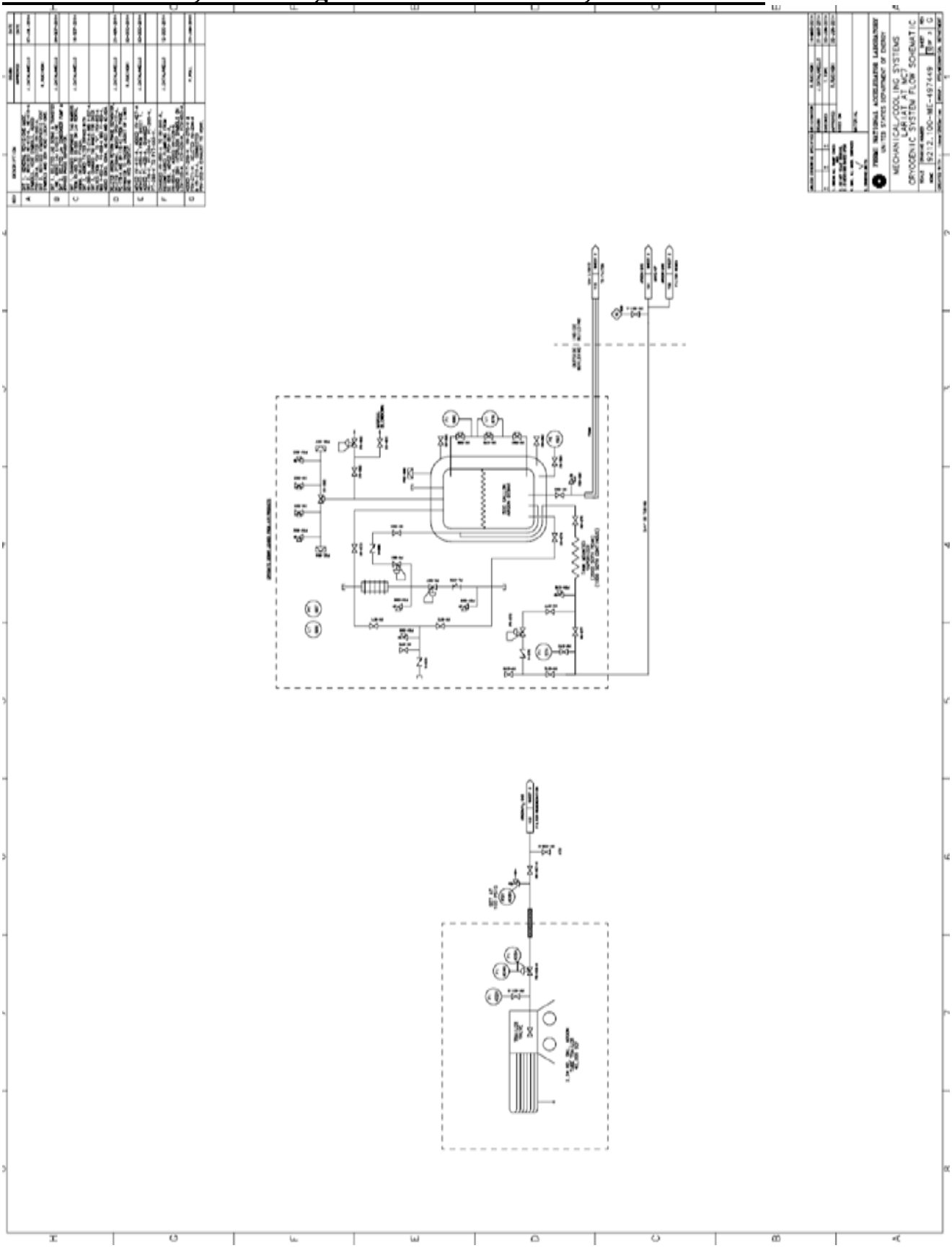

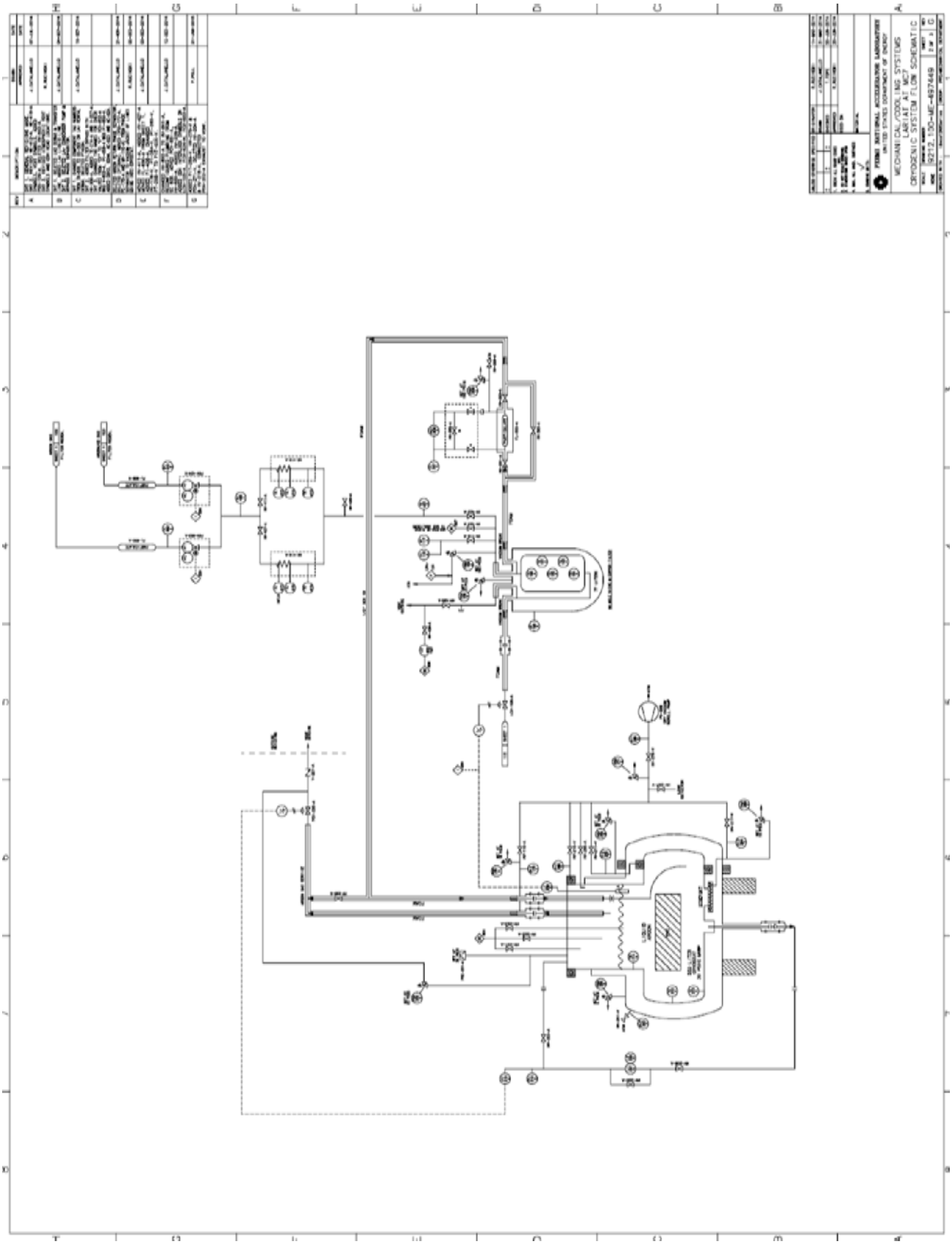
FERMI NATIONAL ACCELERATOR LABORATORY
UNITED STATES DEPARTMENT OF ENERGY
MECHANICAL/COOLING SYSTEMS
CRYOGENIC SYSTEM FLOW SCHEMATIC
LABELAT AT MC7
9212.100-ME-497449

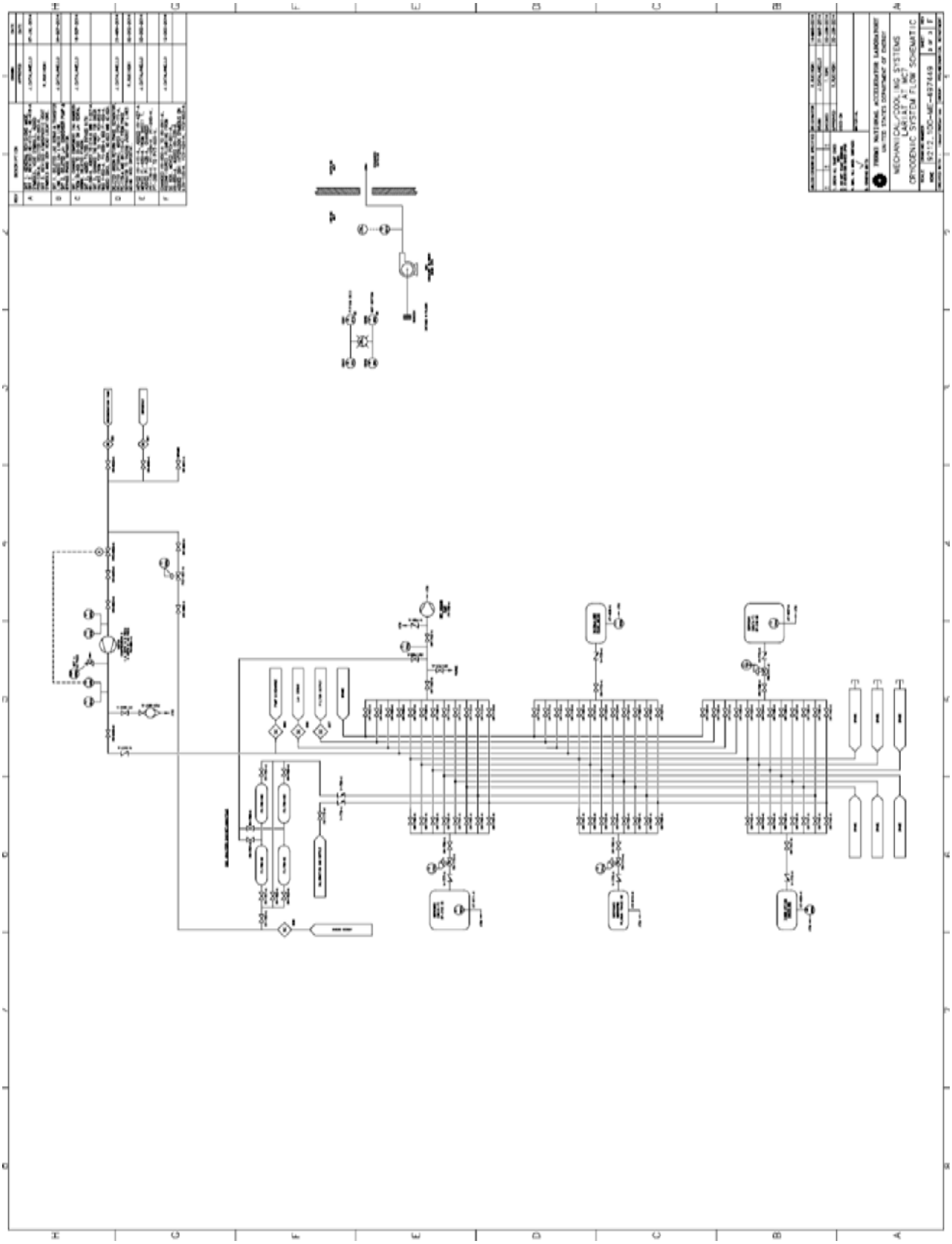
FERMI NATIONAL ACCELERATOR LABORATORY
UNITED STATES DEPARTMENT OF ENERGY
MECHANICAL/COOLING SYSTEMS
LARIAT AT MC7
CRYOGENIC SYSTEM FLOW SCHEMATIC
SIZE
D
DWG NO.
9212.100-ME-497449
REV
A
SHT 1 OF 1

Component List

Instr Code	Tag #	Serv. Code	PID	GRID	LOC	Service Description	Instrument Type	Operating Range or Setpoint	Pressure Rating
LCV	105	A	SHT-2	5-	D	LAr supply level control valve	Actuated level control valve	0-100%	2500 psig
PSV	108	V	SHT-2	4-	D	filter insulating vacuum	parallel plate relief	~0.25 psid	1 atm
PSV	109	A	SHT-2	4-	D	filter	relief valve	100 psig	400 psig
HV	110	A	SHT-2	6-	E	cryostat LAr supply/return VJ	manual valve	NA	
PI	116	A	SHT-2	4-	E	filter	local pressure indicator	vac - 160 psig	160 psig
PT	117	A	SHT-2	4-	E	filter	pressure transmitter	0 - 250 psia	250 psia
HV	118	A	SHT-2	4-	E	filter pressure instrumentation isolation	manual valve (diaphragm)	NA	250 psig
PSV	177	V	SHT-2	6-	F	LAr Supply VJ relief	relief valve	10	2400 psig
PIT	178	V	SHT-2	6-	F	filtered liquid return at cryostat	pressure transmitter	1E-4 to 1E3 Torr	
TE	190	A	SHT-2	4-	D	filter bed temperature (top)	100 ohm platinum RTD	NA	400 psig
TE	191	A	SHT-2	4-	D	filter bed temperature	100 ohm platinum RTD	NA	400 psig
TE	192	A	SHT-2	4-	D	filter bed temperature	100 ohm platinum RTD	NA	400 psig
TE	193	A	SHT-2	4-	D	filter bed temperature	100 ohm platinum RTD	NA	400 psig
TE	194	A	SHT-2	4-	D	filter bed temperature (bottom)	100 ohm platinum RTD	NA	400 psig
PIT	195	V	SHT-2	5-	D	Filter housing vacuum jacket	Vacuum transducer/gauge	1E-4 to 1E3 Torr	
PSE	201	A	SHT-2	7-	D	cryostat relief	rupture disk	30 psig	275 psig
PSV	202	A	SHT-2	7-	D	cryostat relief	relief valve	15 psig	2400 psig
HV	203	A	SHT-2	7-	D	cryostat pressure instrumentaiton isolation	manual valve (diaphragm)	NA	250 psig
HV	205	A	SHT-2	7-	C	cryostat pressure instrumentaiton equalization	manual valve (diaphragm)	NA	250 psig
HV	206	A	SHT-2	7-	C	cryostat pressure instrumentaiton isolation	manual valve (diaphragm)	NA	250 psig
LI	207	A	SHT-2	7-	C	cryostat level	local level indicator		
LT	208	A	SHT-2	7-	C	cryostat level	level transmitter (dP)	0-7.5 psid (0-16.67 ft)	500 psi
LT	209	A	SHT-2	6-	D	cryostat level	level transmitter (capacitance)	0 - 6"	100 psig
HV	210	A	SHT-2	5-	D	cryostat top flange between seal ports	manual valve (bellows)	NA	1000 psig
HV	211	V	SHT-2	5-	D	cryostat end flange between seals port	manual valve (bellows)	NA	1000 psig
TE	212	A	SHT-2	6-	C	cryostat metal temperature	100 ohm platinum RTD	NA	
TE	213	A	SHT-2	6-	C	cryostat bottom metal temperature	100 ohm platinum RTD	NA	
TE	214	A	SHT-2	6-	C	cryostat neck metal temperature	100 ohm platinum RTD	NA	

HV	217	V	SHT-2	6-	B	cryostat inner side flange double seal	manual valve (bellows)	NA	1000 psig
PI	218	A	SHT-2	7-	D	crysotat vapor pressure	local pressure indicator		
PT	219	A	SHT-2	7-	D	cryostat vapor pressure	pressure transmitter	0 - 50 psia	50 psia
PCV	220	A	SHT-2	6-	F	cryostat over pressure vent	Actuated pressure control valve	0-100%	1500 psig
HV	221	A	SHT-2	7-	D	cryostat vapor sample near feed thru isolation, sample pt. 801	manual valve (diaphragm)	NA	250 psig
HV	222	A	SHT-2	7-	D	cryostat vapor sample near liquid isolation, sample pt. 801	manual valve (diaphragm)	NA	250 psig
HV	223	A	SHT-2	7-	D	cryostat liquid sample isolation, sample pt. 801	manual valve (diaphragm)	NA	250 psig
V	227	A	SHT-2	6-	E	cryostat vent	check valve	NA	
HV	228	A	SHT-2	6-	E	cryostat vent	manual valve	NA	400 psig
PSV	250	V	SHT-2	7-	C	Cryostat vacuum jacket relief valve	parallel plate relief	0	
HV	251	V	SHT-2	7-	C	Cryostat vacuum jacket pump out	manual valve		
HV	255	A	SHT-2	6-	D	cryostat neck fill port	manual valve (bellows)	NA	1000 psig
PSV	259	V	SHT-2	6-	D	cryostat end flange trapped volume relief	relief valve	10	2400 psig
PSV	260	V	SHT-2	6-	B	cryostat side flange trapped volume relief	relief valve	10	2400 psig
PIT	263	V	SHT-2	7-	C	Cryostat vacuum jacket pressure	Vacuum transducer/gauge	1E-4 to 1E3 Torr	
PIT	264	V	SHT-2	6-	B	cryostat seal vacuum	pressure transmitter	1E-4 to 1E3 Torr	
PIT	265	V	SHT-2	6-	C	cryostat seal vacuum	pressure transmitter	1E-4 to 1E3 Torr	
PIT	266	V	SHT-2	6-	D	cryostat seal vacuum	pressure transmitter	1E-4 to 1E3 Torr	
HV	267	V	SHT-2	6-	E	cryostat active vacuum vent	manual valve		1 atm
PU	268	V	SHT-2	6-	E	cryostat vacuum dry scroll pump	pump		
PIT	269	V	SHT-2	6-	D	cryostat vacuum pump input	pressure transmitter	1E-4 to 1E3 Torr	
HV	270	V	SHT-2	5-	C	cryostat vacuum header isolation	manual valve		1 atm
PSV	271	V	SHT-2	5-	C	Vacuum header relief valve	relief valve	0 psig	
HV	300	Ar	SHT-2	3-	D	LAr transfer line filter bypass	Manual valve		150 psig
HV	301	Ar	SHT-2	3-	D	LAr transfer line filter isolation	Manual valve		150 psig
FL	302	Ar	SHT-2	3-	D	LAr transfer line filter	Particulate filter		150 psig
HV	303	Ar	SHT-2	3-	D	LAr transfer line filter isolation	Manual valve		150 psig
HV	305	Ar	SHT-2	3-	D	LAr transfer line filter pressure gauge equalizer	Manual valve		6000 psi
PDI	306	Ar	SHT-2	3-	D	LAr transfer line filter pressure drop	Differentional Pressure gauge		500 psig
PI	307	Ar	SHT-2	3-	D	LAr transfer line filter upstream pressure	Pressure gauge		min. 200 ps

Instr Code	Tag #	Serv. Code	PID	GRID	LOC	Service Description	Instrument Type	Operating Range or Setpoint	Pressure Rating
HV	308	Ar	SHT-2	3-	D	LAr transfer line filter vent	Manual valve		2000 psig
PSV	309	Ar	SHT-2	3-	D	LAr transfer line filter pressure relief	Relief valve	150 psig SP	
PR	400	H	SHT-2	1-	D	Ar/H2 from trailer	pressure regulator	50	3000 psig
HV	401	H	SHT-2	1-	D	H2/Ar pressure instrumentation	manual valve	NA	3500 psig
PI	402	H	SHT-2	1-	D	regeneration gas trailer pressure	local pressure indicator	NA	3000 psig
PI	404	H	SHT-2	1-	D	Ar/H2 from trailer	pressure indicator on regulator	0 - 4000 psig	4000 psig
PI	405	H	SHT-2	1-	D	Ar/H2 from trailer	pressure indicator on regulator	vac - 200 psig	200 psig
PSV	406	H	SHT-2	1-	D	Ar/H2 from trailer relief	relief valve	100 psig	400 psig
HV	407	H	SHT-2	1-	D	Ar/H2 from trailer	manual valve	NA	1000 psig
HV	408	H	SHT-2	1-	D	Trailer hose blowdown	manual valve		
FL	409	H	SHT-2	4-	G	filter regeneration H2/Ar supply	particulate filter		
PI	410	H	SHT-2	4-	G	filter regeneration H2/Ar supply	local pressure indicator	vac - 160 psig	160 psig
HV	411	A	SHT-2	4-	F	filter regeneration heater isolation	manual valve (ball valve)	NA	1000 psig
HE	412		SHT-2	4-	F	filter regeneration	gas heater	NA	100 psig
TE	413		SHT-2	4-	F	regen gas heater (gas flow)	Type K TC	NA	100 psig
TE	414		SHT-2	4-	F	regen gas heater (heater surface)	Type K TC	NA	100 psig
TE	415		SHT-2	4-	F	regen gas heater (gas flow)	Type K TC	NA	external to process
HE	416		SHT-2	4-	F	filter regeneration	gas heater	NA	100 psig
TE	417		SHT-2	4-	F	regen gas heater (gas flow)	Type K TC	NA	100 psig
TE	418		SHT-2	4-	F	regen gas heater (heater surface)	Type K TC	NA	100 psig
TE	419		SHT-2	4-	F	regen gas heater (gas flow)	Type K TC	NA	external to process
HV	420	A	SHT-2	4-	E	filter regeneration pumpout	manual valve (ball valve)	NA	1000 psig
TE	421	A	SHT-2	4-	E	filter regeneration inlet temperature	Type K TC	NA	100 psig
HV	422	A	SHT-2	4-	D	filter regeneration inlet isolation	manual valve (bellows)	NA	2500 psig
HV	423	A	SHT-2	4-	D	filter discharge gas sample	manual valve (diaphragm)	NA	250 psig
FCV	424	H	SHT-2	4-	G	filter regeneration argon supply	gas mass flow controller	0 - 30 SCFM	160 psia
HV	425	A	SHT-2	5-	E	filter regeneration vent isolation	manual valve (bellows)	NA	2500 psig
HV	426	A	SHT-2	5-	E	filter regeneration vent gas sample	manual valve (diaphragm)	NA	250 psig

HV	427	A	SHT-2	4-	F	filter regeneration heater isolation	manual valve (ball valve)	NA	1000 psig
PI	428	H	SHT-2	4-	F	filter regeneration H2/Ar supply	local pressure indicator	vac - 160 psig	160 psig
FL	570	A	SHT-1	4-	E	500 Gallon Argon Dewar - Pressure Building loop strainer	Filter		
HV	572	A	SHT-1	4-	E	500 Gallon Argon Dewar - vaporizer regulator isolation valve	manual valve		
HV	573	A	SHT-1	4-	E	500 Gallon Argon Dewar - PI574 isolation valve	manual valve		
PI	574	A	SHT-1	4-	E	500 Gallon Argon Dewar - Gas Argon supply pressure at dewar	pressure indicator		
V	575	A	SHT-1	4-	E	500 Gallon Argon Dewar - Vaporizer supply check valve	check valve		
HV	576	A	SHT-1	4-	E	500 Gallon Argon Dewar - Vaporizer vent	manual valve		
HV	577	A	SHT-1	4-	E	500 Gallon Argon Dewar - Vaporizer pressure regulator block valve	manual valve		
PR	578	A	SHT-1	4-	E	500 Gallon Argon Dewar - Vaporizer supply pressure regulator	pressure regulator		
PSV	579	A	SHT-1	4-	E	500 Gallon Argon Dewar - Vaporizer trapped volume relief	relief valve		
HV	580	A	SHT-1	4-	E	500 Gallon Argon Dewar - manual block valve for pressure control regulator	manual valve		
HV	581	A	SHT-1	4-	E	500 Gallon Argon Dewar - relief test port	manual valve		
HV	582	A	SHT-1	4-	E	500 Gallon Argon Dewar - Relief device diverter valve	manual valve		
HV	583	A	SHT-1	4-	E	500 Gallon Argon Dewar - relief test port	manual valve		
HV	584	A	SHT-1	4-	E	500 Gallon Argon Dewar - Pressure Builder block valve	manual valve		
V	585	A	SHT-1	4-	E	500 Gallon Argon Dewar - Pressure Builder loop check valve	check valve		
PSE	587	A	SHT-1	4-	E	500 Gallon Argon Dewar - Secondary burst disk	rupture disk	316 psig	
PSE	588	V	SHT-1	4-	E	500 Gallon Argon Dewar - Vacuum jacket relief device	relief valve	316 psig	
HV	589	A	SHT-1	4-	E	500 Gallon Argon Dewar - LI and PI instrumentation isolation	manual valve		
HV	590	A	SHT-1	4-	E	500 Gallon Argon Dewar - LI and PI instrumentation isolation	manual valve		
PSV	591	A	SHT-1	4-	E	500 Gallon Argon Dewar - LAr withdrawal trapped volume relief	relief valve		
HV	592	V	SHT-1	4-	E	500 Gallon Argon Dewar - Vauum Jacket pump down valve	manual valve		
HV	594	V	SHT-1	4-	E	500 Gallon Argon Dewar - Vauum Jacket pressure gage isolation valve	manual valve		
HV	595	V	SHT-1	4-	E	500 Gallon Argon Dewar - Vauum Jacket pump down valve	manual valve		
PSV	596	A	SHT-1	4-	E	500 Gallon Argon Dewar - Pressure builder trapped volume relief	relief valve		
PR	597	A	SHT-1	4-	E	500 Gallon Argon Dewar - Pressure building pressure regulator	regulator		
PSV	598	A	SHT-1	4-	E	500 Gallon Argon Dewar - Pressure builder trapped volume relief	relief valve		

Instr Code	Tag #	Serv. Code	PID	GRID	LOC	Service Description	Instrument Type	Operating Range or Setpoint	Pressure Rating
PSV	599	A	SHT-1	4-	E	500 Gallon Argon Dewar - Fill line trapped volume relief	relief valve		
AT	605	A	SHT-2	5-	E	filter regeneration vent gas sample	dewpoint meter	-80 to +20 C	290 psia
AT	606	A	SHT-3	4-	C	gas analyzers	dewpoint meter	-60 to +20 C	290 psi
AT	607	A	SHT-3	4-	B	gas analyzers	oxygen analyzer	0 - 10,000 ppm	30 psig
AT	608	A	SHT-3	6-	B	gas analyzers	water analyzer	0 - 20 ppm	125 psig
AE	609	A	SHT-3	6-	B	gas analyzers (AT-608 output)	dewpoint meter	-80 to +20 C	290 psia
AT	610	A	SHT-3	6-	C	gas analyzers	nitrogen analyzer	0 - 100 ppm	30 psig
AT	611	A	SHT-3	6-	E	gas analyzers	oxygen analyzer	0 - 50 ppm	30 psig
FL	650	A	SHT-2	4-	G	Particulate filter gas argon supply from 500 gal. dewar	filter		
HV	651	A	SHT-1	3-	D	Gas argon sample point 809 to analyzer	manual valve		
PI	652	A	SHT-2	4-	G	filter regeneration argon supply	local pressure indicator	vac - 160 psig	160 psig
FCV	653	A	SHT-2	4-	G	filter regeneration argon supply	gas mass flow controller	0 - 30 SCFM	160 psia
V	670	A	SHT-1	4-	E	500 Gallon Argon Dewar - Fill line check valve	check valve		
HV	671	A	SHT-1	4-	E	500 Gallon Argon Dewar - Top fill isolation valve	manual valve		
HV	672	A	SHT-1	4-	E	500 Gallon Argon Dewar - Bottom fill isolation valve	manual valve		
HV	673	A	SHT-1	4-	E	500 Gallon Argon Dewar - Top fill main block valve	manual valve		
HV	674	A	SHT-1	4-	E	500 Gallon Argon Dewar - Bottom fill main block valve	manual valve		
HV	675	A	SHT-1	4-	E	500 Gallon Argon Dewar - Bypass valve for pressure/level instruments	manual valve		
HV	676	A	SHT-1	4-	E	500 Gallon Argon Dewar - Vaporizer main block valve	manual valve		
HV	677	A	SHT-1	4-	E	500 Gallon Argon Dewar - Delivery pressure regulator bypass valve	manual valve		
HV	678	A	SHT-1	4-	E	500 Gallon Argon Dewar - Fill line vent valve	manual valve		
LI	679	A	SHT-1	4-	E	500 Gallon Argon Dewar - Inner vessel level indicator	level gauge		
PI	680	A	SHT-1	3-	C	500 Gallon Argon Dewar - Inner vessel pressure indicator	local pressure indicator		
PR	681	A	SHT-1	4-	E	500 Gallon Argon Dewar - Pressure building loop backpressure regulator	pressure regulator	185 psig	
PSV	682	A	SHT-1	4-	E	500 Gallon Argon Dewar - Primary relief valve	relief valve	240 psig	
PSV	683	A	SHT-1	4-	E	500 Gallon Argon Dewar - Secondary relief valve	relief valve	240 psig	
PSE	684	A	SHT-1	4-	E	500 Gallon Argon Dewar - Primary burst disk	rupture disc	316 psig	
LT	686	A	SHT-1	4-	E	500 Gallon Argon Dewar - Level transmitter	level transmitter		

PT	687	A	SHT-1	4-	E	500 Gallon Argon Dewar - Pressure transmitter	pressure transmitter		
HV	690	A	SHT-1	4-	E	500 Gallon Argon Dewar - Liquid withdrawal valve	manual valve		
HV	691	A	SHT-1	4-	E	500 Gallon Argon Dewar - Manual blowdown	manual valve		
PR	692	A	SHT-1	4-	E	500 Gallon Argon Dewar - Blowdown loop backpressure regulator to	pressure regulator		
PE	693	V	SHT-1	4-	E	500 Gallon Argon Dewar - Vacuum jacket transmitter port	vacuum readout		
HV	700	A	SHT-3	4-	E	gas analyzers - vacuum pump isolation	manual valve		
HV	701	A	SHT-3	4-	E	gas analyzers - vacuum pump line purge	manual valve		3000 psig
HV	702	A	SHT-3	4-	E	gas analyzers - vacuuum pump isolation	manual valve		3000 psig
HV	703	A	SHT-3	5-	E	gas analyzers - sample line to vacuum pump	manual valve		3000 psig
HV	704	A	SHT-3	5-	E	gas analyzers - sample line to vacuum pump	manual valve		3000 psig
HV	705	A	SHT-3	5-	E	gas analyzers - sample line to vacuum pump	manual valve		3000 psig
HV	706	A	SHT-3	5-	E	gas analyzers - sample line to vacuum pump	manual valve		3000 psig
HV	707	A	SHT-3	5-	E	gas analyzers - sample line to vacuum pump	manual valve		3000 psig
HV	708	A	SHT-3	5-	E	gas analyzers - sample line to vacuum pump	manual valve		3000 psig
HV	709	A	SHT-3	5-	E	gas analyzers - sample line to vacuum pump	manual valve		3000 psig
HV	710	A	SHT-3	5-	E	gas analyzers - sample line to vacuum pump	manual valve		3000 psig
HV	711	A	SHT-3	5-	E	gas analyzers - sample line to vacuum pump	manual valve		3000 psig
HV	712	A	SHT-3	5-	E	gas analyzers - sample line to vacuum pump	manual valve		3000 psig
HV	713	A	SHT-3	5-	D	gas analyzers - sample line to vacuum pump	manual valve		3000 psig
HV	714	A	SHT-3	5-	D	gas analyzers - sample line to vacuum pump	manual valve		3000 psig
HV	715	A	SHT-3	5-	C	gas analyzers - dewpoint meter isolation	manual valve		3000 psig
HV	716	A	SHT-3	5-	C	gas analyzers - sample line to dewpoint meter	manual valve		3000 psig
HV	717	A	SHT-3	5-	C	gas analyzers - sample line to dewpoint meter	manual valve		3000 psig
HV	718	A	SHT-3	5-	C	gas analyzers - sample line to dewpoint meter	manual valve		3000 psig
HV	719	A	SHT-3	5-	C	gas analyzers - sample line to dewpoint meter	manual valve		3000 psig
HV	720	A	SHT-3	5-	C	gas analyzers - sample line to dewpoint meter	manual valve		3000 psig
HV	721	A	SHT-3	5-	C	gas analyzers - sample line to dewpoint meter	manual valve		3000 psig
HV	722	A	SHT-3	5-	C	gas analyzers - sample line to dewpoint meter	manual valve		3000 psig
HV	723	A	SHT-3	5-	C	gas analyzers - sample line to dewpoint meter	manual valve		3000 psig
HV	724	A	SHT-3	5-	C	gas analyzers - sample line to dewpoint meter	manual valve		3000 psig

Instr Code	Tag #	Serv. Code	PID	GRID	LOC	Service Description	Instrument Type	Operating Range or Setpoint	Pressure Rating
HV	725	A	SHT-3	5-	C	gas analyzers - sample line to dewpoint meter	manual valve		3000 psig
HV	726	A	SHT-3	5-	C	gas analyzers - sample line to dewpoint meter	manual valve		3000 psig
HV	727	A	SHT-3	5-	C	gas analyzers - sample line to dewpoint meter	manual valve		3000 psig
HV	728	A	SHT-3	5-	B	gas analyzers - O2 meter isolation	manual valve		3000 psig
HV	729	A	SHT-3	5-	B	gas analyzers - sample line to O2 meter	manual valve		3000 psig
HV	730	A	SHT-3	5-	B	gas analyzers - sample line to O2 meter	manual valve		3000 psig
HV	731	A	SHT-3	5-	B	gas analyzers - sample line to O2 meter	manual valve		3000 psig
HV	732	A	SHT-3	5-	B	gas analyzers - sample line to O2 meter	manual valve		3000 psig
HV	733	A	SHT-3	5-	B	gas analyzers - sample line to O2 meter	manual valve		3000 psig
HV	734	A	SHT-3	5-	B	gas analyzers - sample line to O2 meter	manual valve		3000 psig
HV	735	A	SHT-3	5-	B	gas analyzers - sample line to O2 meter	manual valve		3000 psig
HV	736	A	SHT-3	5-	B	gas analyzers - sample line to O2 meter	manual valve		3000 psig
HV	737	A	SHT-3	5-	B	gas analyzers - sample line to O2 meter	manual valve		3000 psig
HV	738	A	SHT-3	5-	B	gas analyzers - sample line to O2 meter	manual valve		3000 psig
HV	739	A	SHT-3	5-	B	gas analyzers - sample line to O2 meter	manual valve		3000 psig
HV	740	A	SHT-3	5-	B	gas analyzers - sample line to O2 meter	manual valve		3000 psig
HV	741	A	SHT-3	6-	B	gas analyzers - H2O meter isolation	manual valve		3000 psig
HV	742	A	SHT-3	6-	B	gas analyzers - sample line to H2O meter	manual valve		3000 psig
HV	743	A	SHT-3	6-	B	gas analyzers - sample line to H2O meter	manual valve		3000 psig
HV	744	A	SHT-3	6-	B	gas analyzers - sample line to H2O meter	manual valve		3000 psig
HV	745	A	SHT-3	6-	B	gas analyzers - sample line to H2O meter	manual valve		3000 psig
HV	746	A	SHT-3	6-	B	gas analyzers - sample line to H2O meter	manual valve		3000 psig
HV	747	A	SHT-3	6-	B	gas analyzers - sample line to H2O meter	manual valve		3000 psig
HV	748	A	SHT-3	6-	B	gas analyzers - sample line to H2O meter	manual valve		3000 psig
HV	749	A	SHT-3	6-	B	gas analyzers - sample line to H2O meter	manual valve		3000 psig
HV	750	A	SHT-3	6-	C	gas analyzers - N2 meter isolation	manual valve		3000 psig
HV	751	A	SHT-3	6-	C	gas analyzers - sample line to N2 meter	manual valve		3000 psig
HV	752	A	SHT-3	6-	C	gas analyzers - sample line to N2 meter	manual valve		3000 psig
HV	753	A	SHT-3	6-	C	gas analyzers - sample line to N2 meter	manual valve		3000 psig
HV	754	A	SHT-3	6-	C	gas analyzers - sample line to N2 meter	manual valve		3000 psig
HV	755	A	SHT-3	6-	C	gas analyzers - sample line to N2 meter	manual valve		3000 psig
HV	756	A	SHT-3	6-	C	gas analyzers - sample line to N2 meter	manual valve		3000 psig

HV	757	A	SHT-3	6-	C	gas analyzers - sample line to N2 meter	manual valve		3000 psig
HV	758	A	SHT-3	6-	C	gas analyzers - sample line to N2 meter	manual valve		3000 psig
HV	759	A	SHT-3	6-	E	gas analyzers - O2 meter isolation	manual valve		3000 psig
HV	760	A	SHT-3	6-	E	gas analyzers - sample line to O2 meter	manual valve		3000 psig
HV	761	A	SHT-3	6-	E	gas analyzers - sample line to O2 meter	manual valve		3000 psig
HV	762	A	SHT-3	6-	E	gas analyzers - sample line to O2 meter	manual valve		3000 psig
HV	763	A	SHT-3	6-	E	gas analyzers - sample line to O2 meter	manual valve		3000 psig
HV	764	A	SHT-3	6-	E	gas analyzers - sample line to O2 meter	manual valve		3000 psig
HV	765	A	SHT-3	6-	E	gas analyzers - sample line to O2 meter	manual valve		3000 psig
HV	766	A	SHT-3	6-	E	gas analyzers - sample line to O2 meter	manual valve		3000 psig
HV	767	A	SHT-3	6-	E	gas analyzers - sample line to O2 meter	manual valve		3000 psig
HV	768	A	SHT-3	5-	E	gas analyzers - vacuum pump out	manual valve		3000 psig
V	769	A	SHT-3	4-	E	gas analyzers - vacuum pump	check valve		6000 psig
V	770	A	SHT-3	5-	D	gas analyzers - Dewpoint meter inlet	check valve		6000 psig
PR	771	A	SHT-3	5-	B	gas analyzers - O2 meter inlet	pressure regulator		5000 psig
V	772	A	SHT-3	5-	B	gas analyzers - O2 meter inlet	check valve		6000 psig
V	773	A	SHT-3	6-	B	gas analyzers - H2O meter inlet	check valve		6000 psig
PR	774	A	SHT-3	6-	C	gas analyzers - N2 meter inlet	pressure regulator		5000 psig
V	775	A	SHT-3	6-	C	gas analyzers - N2 meter inlet	check valve		6000 psig
PR	776	A	SHT-3	6-	E	gas analyzers - O2 meter inlet	pressure regulator		5000 psig
V	777	A	SHT-3	6-	E	gas analyzers - O2 meter inlet	check valve		6000 psig
HV	778	A	SHT-3	6-	F	gas analyzers - calibration gas	manual valve		3000 psig
V	779	A	SHT-3	6-	F	gas analyzers - calibration gas inlet	check valve		6000 psig
HV	780	A	SHT-3	6-	F	gas analyzers - argon gas supply	manual valve		3000 psig
HV	781	A	SHT-3	6-	F	gas analyzers - argon gas supply	manual valve		3000 psig
HV	782	A	SHT-3	6-	F	gas analyzers - argon gas supply	manual valve		3000 psig
HV	783	A	SHT-3	6-	F	gas analyzers - argon gas supply	manual valve		3000 psig
HV	784	A	SHT-3	6-	F	gas analyzers - argon gas supply	manual valve		3000 psig
HV	785	A	SHT-3	6-	F	gas analyzers - argon gas supply	manual valve		3000 psig
V	786	A	SHT-3	6-	F	gas analyzers - argon gas supply	check valve		3000 psig

Instr Code	Tag #	Serv. Code	PID	GRID	LOC	Service Description	Instrument Type	Operating Range or Setpoint	Pressu Rating
HV	787	A	SHT-3	6-	F	gas analyzers - sample line to vacuum pump	manual valve		6000 ps
HV	788	A	SHT-3	6-	F	gas analyzers - sample line to vacuum pump	manual valve		3000 ps
PI	789	A	SHT-3	5-	E	gas analyzers	local pressure indicator	vac - 160 psig	160 psi
FL	790	A	SHT-3	6-	F	O2 cartridge filter	filter		
PI	790	A	SHT-3	5-	B	O2 analyzer input pressure	local pressure indicator		
PI	791	A	SHT-3	6-	C	gas analyzers - N2 inlet	local pressure indicator	vac - 160 psig	160 psi
PI	792	A	SHT-3	6-	E	gas analyzers - O2 analyzer inlet	local pressure indicator		
FI	793	A	SHT-3	4-	C	Dew point meter outlet flow	flow indicator		
FI	794	A	SHT-3	4-	B	O2 analyzer flow	flow indicator		
FL	795	A	SHT-3	6-	F	H2O cartridge filter	filter		
FL	796	A	SHT-3	6-	F	O2 cartridge filter	filter		
FI	797	A	SHT-3	6-	D	O2 analyzer flow	flow indicator		
FL	798	A	SHT-3	5-	E	H2O cartridge filter	filter		
PV	799		SHT-3	4-	D	gas analyzers	vacuum pump	vac - atm	atm
AE	819		SHT-3	2-	F	vicinity of equipment	ODH O2 sensor	0-25% O2	atm
AE	820		SHT-3	2-	F	vicinity of equipment	ODH O2 sensor	0-25% O2	atm
FS	821		SHT-3	2-	E	ODH blower outlet duct	pressure differential switch	100-1000 cm/sec	atm
HV	822	A	SHT-3	3-	G	filter regeneration gas sample	manual valve (diaphragm)	NA	250 psi
AE	823		SHT-3	2-	F	vicinity of equipment	ODH O2 sensor	0-25% O2	atm
AE	824		SHT-3	2-	F	vicinity of equipment	ODH O2 sensor	0-25% O2	atm
HV	840	A	SHT-3	4-	G	gas analyzers	manual valve (diaphragm)	NA	250 psi
HV	841	A	SHT-3	4-	G	gas analyzers	manual valve (diaphragm)	NA	250 psi
PI	842	A	SHT-3	5-	H	gas analyzers	pressure indicator	vac - 60 psig	60 psig
PT	843	A	SHT-3	5-	H	gas analyzers	pressure transmitter	0 - 100 psia	100 psi
PI	844	A	SHT-3	5-	H	gas analyzers	pressure indicator	vac - 60 psig	60 psig
PT	845	A	SHT-3	5-	H	gas analyzers	pressure transmitter	0 - 100 psia	100 psi
PSV	846	A	SHT-3	5-	H	gas booster pump relief	relief valve	40 psig	
V	847	A	SHT-3	5-	G	gas analyzers	check valve	1 psig	
HV	848	A	SHT-3	5-	G	gas analyzers	manual valve (diaphragm)	NA	250 psi
HV	849	A	SHT-3	3-	H	gas analyzers	manual valve (diaphragm)	NA	250 psi
HV	850	A	SHT-3	3-	H	argon supply for analyzer booster pump	manual valve (diaphragm)	NA	250 psi

PCV	851	A	SHT-3	3-	H	argon supply for analyzer booster pump	pressure control valve	0 - 30 psig	300 psi
PCV	852	A	SHT-3	4-	H	gas analyzer booster pump inlet restriction	control valve	Cv max = 0.02	700 psi
HV	853	A	SHT-3	4-	H	gas analyzer booster pump	manual valve (diaphragm)	NA	250 psi
PU	854	A	SHT-3	5-	H	gas analyzer booster pump	postive displacment pump	0 - 1.4 SCFM	40 psig
HV	855	A	SHT-3	3-	G	argon supply for analyzer booster pump	manual valve (diaphragm)	NA	250 psi
HV	856	A	SHT-3	5-	G	analyzer booster pump test flowmeter	manual valve (diaphragm)	NA	250 psi
FCV	857	A	SHT-3	5-	G	analyzer booster pump test flowmeter	manual flow control valve		
PI	858	A	SHT-3	4-	H	gas analyzers	pressure indicator	vac - 60 psig	60 psig

Piping Analysis

Pipe Calculations

(Parts of this text are adapted from the NML pressure piping note by Alex Martinez, AD, Fermilab). All of the piping in the system consists of TP304/TP304L ASTM A312 stainless steel pipe and TP304/TP304L ASTM A269 stainless steel tubing. The allowable stress used for calculation is taken from B31.3 Table A-1, and is 20.0 ksi for TP304 and 16.7 ksi for TP304L austenitic stainless steels. For purposes of this analysis the more conservative value of 16.7 ksi will be assumed for all the calculations.

$$t = \frac{P * D}{2(SEW + PY)}$$ ASME B31.3 section 304.1.2, Equation 3a

Straight Pipe under Internal Pressure

In this equation, t = pressure design thickness, E is the quality factor for the pipe or tube which is dependent on how the pipe or tube is manufactured. For ASTM A312 and ASTM A269 pipe and tube, these values are listed in Table A-1B. All the pipe in the system is fusion welded and the majority of the tube is seamless. In order to be conservative a value for E of 0.80 (fusion welded) was chosen for all cases. W is the weld joint strength reduction factor which applies only at elevated temperature and therefore is equal to 1.0. Y is a coefficient from table 304.1.1 and is given as 0.4 for austenitic stainless steels.

Description	Material	Size	P design	t minimum	t actual
Regeneration gas supply	Stainless steel	1” tube	100 psig	0.004”	0.095”
Instrumentation tubing	Stainless steel	¼” OD tubing	100 psig	0.001”	0.035”
LAr supply pipe	Stainless steel	1” pipe	100 psig	0.005”	0.109”
LAr supply pipe	Stainless steel	½” pipe	100 psig	0.003”	0.083

As can be seen in the above table, very small wall thicknesses are required. For practical fabrication and assembly purposes, all piping and tubing wall thicknesses and fittings are greater than the minimum required ~ 0.005”. Further analysis is not warranted.

Impact Testing

Toughness test requirements in ASME B31.3-2008, table 323.2.2 column A-4 apply. The design minimum temperature is taken at -325 F which is above the minimum temperature of -425 F listed for 18Cr-8Ni materials in Table A-1. Weld metal deposits shall be impact tested. The memo that follows in this piping note describes impact testing done to type 304 stainless steel piping weld metal deposits and justifies that the testing is applicable to cryogenic piping in the future such as that in the LArIAT system.

Fermilab

Accelerator Division
Cryogenic Department
630.840.6858 (office)
630.840.4989 (fax)

Memorandum

To: Arkadiy Klebaner, Jay Theilacker, Alex Martinez, Bill Soyars, Brian DeGraff, Jerry Makara, Michael Geynisman

From: Michael White

Subject: Charpy Impact Testing for LN2 Piping

Date: April 13, 2010

Summary of Revision 1

The initial Charpy Impact Testing for LN2 Piping memorandum that was sent on December 29, 2009 contains a known error. The memorandum suggested that welding 316 or 316L with 308L filler metal was acceptable. However, welding 316 or 316L with 308L filler metal is a violation of the AD/Cryo weld procedure, which has now been attached as Appendix 3 to this memo for easy reference. The Charpy impact testing that was performed qualified the AD/Cryo weld procedure for 308L filler rod, but the procedure must be followed to remain within the qualification. All instances where 316 or 316L stainless steel was previously mentioned have been removed, since those materials require the use of 316 filler rod according to the AD/Cryo weld procedure.

It should also be noted that type 308L filler rod also qualifies as type 308, so it is acceptable to weld type 304 to type 304 stainless steel using 308L filler rod even though it is not explicitly specified in the AD/Cryo weld procedure. This memorandum will be updated again once Charpy impact testing data becomes available for welds made with type 316 filler rod using the AD/Cryo weld procedure.

Introduction

The Fermilab Environmental Health & Safety Manual (FESHM) Chapter 5032 stipulates that cryogenic piping must meet the requirements of ASME B31.3. At colder temperatures materials often become brittle and lose their toughness. ASME B31.3 has impact testing requirements that force the designer to ensure that the selected materials do not undergo a brittle transition while being cooled down to the design temperature. Fermilab has had extensive and successful experience with using austenitic stainless steels for cryogenic piping. This paper was written to

demonstrate that all impact testing requirements are satisfied for the vast majority of LN2 piping components at Fermilab through one set of impact tests that were recently performed.

Mandatory Impact Testing

The ASME B31.3 code specifies impact testing instructions in Section 323 and in Table 323.2.2. The two types of stainless steel most commonly used at Fermilab for cryogenic piping are type 304 and type 304L, which are listed in Table A-1 as having a minimum design metal temperature (MDMT) of -425°F (19 K). Table 323.2.2 has two columns of requirements, with column A for materials above their MDMT and column B for materials below their MDMT. The temperature of LN2 at atmospheric pressure is 77 K and well above the MDMT, so the requirements of column B (which are pertinent to LHe piping) will be neglected here.

Column A of Table 323.2.2 is subdivided into two additional columns, with column (a) for the base metal and column (b) for the weld metal requirements. The four types of steel commonly used for cryogenic piping at Fermilab are all austenitic steel, so the appropriate requirements can be found in row 4. Cell A-4(a) specifies that if either (1) carbon content by analysis is > 0.1% or (2) material is not in solution heat treated condition then impact testing is required. Cell A-4(b) specifies that if the MDMT is less than -20°F then the weld metal deposits must be impact tested.

Cell A-4 has two notes, Note (3) and Note (6), which provide exemptions from impact testing. Note (3) only applies above -155°F and therefore is not applicable to LN2 piping. Note (6) exempts material from impact testing if the maximum obtainable Charpy specimen has a width along the notch of less than 2.5 mm (0.098 in). The wall thickness requirements difficult to maintain even if thin-walled tubing or piping is used, since the 2.5 mm wall thickness is often exceeded in the flanges, coupling, and adapters.

One source for stainless steel material composition requirements is ASTM A269-08 "Standard Specification for Seamless and Welded Austenitic Stainless Steel Tubing", which can be found using links to published standards provided by the Fermilab library. There are various other ASTM standards for stainless steel pipe (such as A312, A358, etc.) but the material composition requirements should be uniform for all ASTM standards. ASTM A269-08 Table 1 specifies that the maximum carbon content is 0.08% for 304 stainless steel and 0.035% for 304L stainless steels.

Section 6 of ASTM A269-08 specifies that the both types of stainless steel must be furnished in solution annealed condition. ASME B31.3 Table A-1 lists all each of the both types of stainless steel as having the same P-No, Group-No, MDMT, and allowable stress regardless of whether it is tube or pipe form. The heat treatment of the tubes and pipes must be similar since the ASME B31.3 listed properties are the same. Therefore, the conditions of cell A-4(a) have been satisfied and impact testing is not required on the base metal when using 304 or 304L stainless steel for LN2 piping.

Cell A-4(b) mandates impact testing on weld metal at LN2 temperatures for 304 or 304L stainless steel if the wall thickness is greater than 2.5 mm. Note (2) applies to all cells in column (b) and states "Impact tests that meet the requirements of Table 323.3.2, which are performed as part of the weld procedure qualification, will satisfy all requirements of para. 323.2.2 and need not be repeated for production welds." This means that once the AD/Cryo welding procedure is

qualified, no more impact testing is required as long as the weld procedure continues to be followed.

Weld Procedure Qualification

The requirements for impact testing are listed in Table 323.3.1. Since impact tests are only required on the welds, the test is governed by the requirements in column A, cells A-4 to A-7. Cell A-4 states that one impact test is required for each welding procedure, type of filler metal, and flux used. AD/cryo only has one weld procedure, does not use flux for welding, and uses AWS-E308L filler metal so only one test is required. The number of test pieces is dictated by Cell A-5 and Note (3). Note (3) states that the test piece must be large enough to obtain three specimens from the weld metal. Cell A-5(a) states that one test validates a range of thicknesses from T/2 to T+ 0.25". A test on 1" Sch 10 pipe (T=0.109") then would cover the range of 0.055" to 0.359". Almost all fittings and pipe used for LN2 piping at Fermilab fall in this thickness range or below. Cell A-5 states that tests do not need to be repeated as long as the material has the same P-number and Group-number. ASME Boiler Pressure Vessel Code (BPVC) IX QW-422 lists 304 and 304L stainless steels as P-No. 8 and Group-No. 2. Both types of stainless steel typically used by AD/Cryo for LN2 piping will be covered by one set of impact tests.

Cell A-6 gives directions for the orientation and location of the specimens, which will be covered further in the next section. Cell A-7 states that the fabricator (FNAL) is responsible for the ensuring the tests are completed.

Charpy Impact Test Results

FNAL does not have a Charpy impact test facility, so the work was contracted out to Westmoreland Mechanical Testing & Research, Inc (WMT&R) in Youngstown, PA. WMT&R is accredited by the American Association for Laboratory Accreditation (A2LA) to meet ASTM E23 standards for impact testing.

Two 3" long 1" Schedule 10 304 stainless steel pipes were butt welded and sent to WMT&R for impact testing. Impact test specimens were cut and machined by WMT&R. Verbal and written instructions were provided to WMT&R regarding the location and orientation of the specimens. The written instructions included with the welded pipe were the following:

Please follow the instructions from ASME B31.3 Table 323.3.1 on the location and orientation of Charpy Impact test specimens on pipe welds:

Across the weld, with notch in the weld metal; notch axis shall be normal to material surface, with one face of specimen <= 1.5 mm (1/16 in.) from the material surface

Please include the lateral expansion in the test results for all three specimens. ASME B31.3 defines the lateral expansion as:

The increase in width of the broken impact specimen over that of the unbroken specimen measured on the compression side, parallel to the line constituting the bottom of the V-notch

Should you have any questions please contact Mike White at 630-840-6858 or mjwhite@fnal.gov

The AD/Cryo In-Process Weld Inspection form used on the sample sent to WMT&R is included in Appendix 1. The WMT&R test results are included in Appendix 2. ASME B31.3 Table 323.3.5 requires steels with a P-No. of 8 to have at least 0.015" of lateral expansion and has no requirements for dissipated energy. The test results showed that the three specimens had lateral expansion in the range of 0.021"-0.029" at -320°F (77K). All requirements of the Charpy impact test were satisfied.

Conclusion

All Charpy impact testing requirements have been satisfied for using 304 and 304L piping components with 308L filler metal and a wall thickness of less than 0.359". The extensive and successful experience Fermilab has had with the materials listed above has been reinforced with successful Charpy impact testing. No further testing should be required for most LN2 piping assemblies fabricated by AD/Cryo as long as thickness requirements are met.

Flanges

Conflat flanges, 2.75” OD are used on the supply line at the inlet and outlet connections to the filter. These flanges do not have a pressure rating but have been used successfully in cryogenic service at pressures exceeding 100 psig. A pressure test of the flange has been performed to 375 psig which qualifies the flange to be used at 100 psig. The pressure test record follows. Other flanges used are 1” Class 150 flanges used at the connection of the supply piping to cryostat where the design pressure is only 30 psig.

It was noted during the review of this note that ASME B31.3, par. 308.2.1 requires that slip on flanges used be double welded. Initially the flanges used were full welded on the face side and tack welded on the back side. As a result of this review, additional welding has been added to the back side of flanges to meet this requirement.

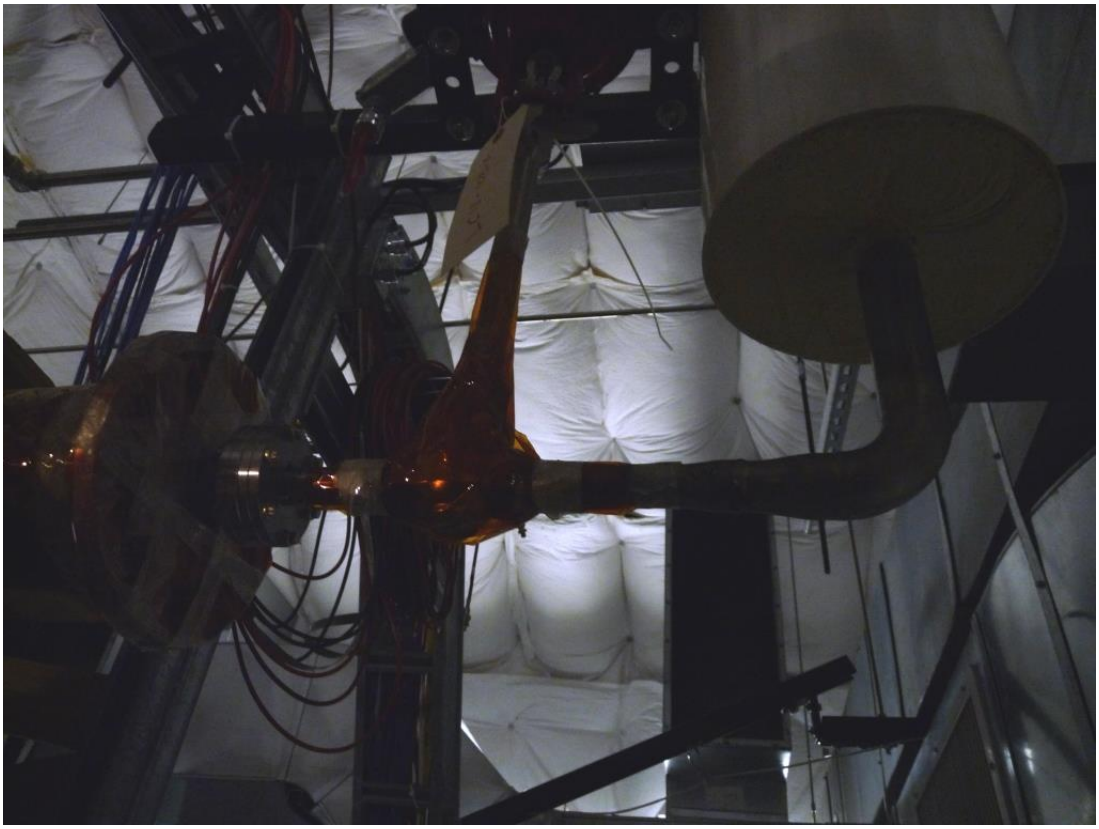

Picture: Foam insulated 1” pipe, LAr Supply, comes in from the right to LCV-105-A. The 2.75” OD conflat flange at inlet to filter can be seen. This is before foam insulating.

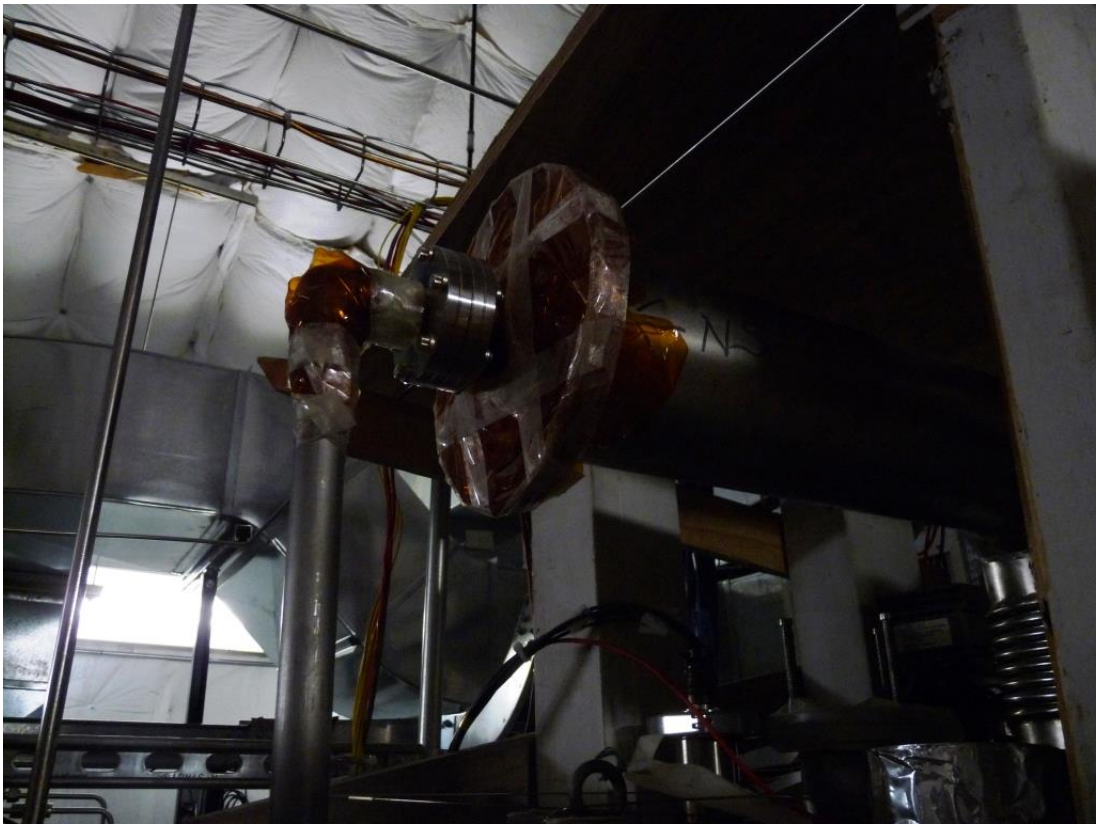
Picture: Filter outlet with 2.75” OD flange to 1” pipe. This is before foam insulating.

Existing Component

The particulate filter between HV-301-A and HV-303-A was removed from the D-Zero helium refrigerator system. It was formerly in liquid nitrogen service with a system design pressure of 150 psig. In this piping system it will be used for liquid argon service. The piping and relief and instrumentation used on this filter has not been changed from its previous service. Under a trapped volume condition with HV-301-A and HV-303-A closed, the design pressure is 150 psig. It is protected by a circle seal relief valve, PSV-309-A set at 150 psig. The relief capacity is 72 scfm as read from the capacity chart in the Circle Seal catalog. The relief valve capacity required is 60 scfm for fire case. See relief case section.

Picture: Particulate filter re-used from the D-Zero helium refrigerator system.

Relief Valve Capacity Requirements

During normal operation the piping is protected from overpressure by the relief devices on the liquid argon supply dewar, the molecular sieve filter, the particulate filter and the cryostat. These relief devices are properly sized for all operational and abnormal conditions. When the piping is isolated from these vessels, a trapped volume of cryogenic fluid could occur and the piping is protected by relief valves on the piping itself. The cryogenic pipe sections are now analyzed for the case of trapped volume and for the fire condition.

1. Supply from LAr dewar, piping from HV-690 to LCV-105-A.
This section of piping is 1" sch. 10 pipe, with 8" OD foam insulation. The run is conservatively 44 feet long. It is protected by PSV-591-A.

The minimum required flow capacity can be calculated by applying CGA S-1.3-2008, Flow Capacities for **conditions other than fire, section 6.2.2**.

Qa = [{0.383*(328-T)}/(922-T)]*F*Gi*U*A

Where:
T = LAr Saturation pressure at 100 psig = 113 Kelvin
F = 1.0 correction factor
Gi = 10.2 gas factor from table 1 at 100 psig

U = Overall heat transfer coefficient
U = thermal conductivity of foam/insulation thickness
U = {[0.026 W/m-K]/0.085 m}*{1 kJ/1000 J}*{3600 s/1 hr} = 1.10 kJ/(hr-m^2-C)

A= arithmetic mean of inner & outer surface area of the insulation = (Ao+Ai)/2
Ao = pi*D*L = 3.14*0.203 m*12.2 m = 7.78 m^2
Ai = pi*D*L = 3.14*0.033 m*12.2 m = 1.26 m^2
A = (Ao+Ai)/2 = 4.52 m^2

Substituting into the equation for Qa; Qa = 5.16 m^3/hr
Converting from m^3/hr to scfm;
Qa = (5.16 m^3/hr)*(35.3 ft^3/m^3)*(1 hr/60 min) = <u>3.0 scfm air</u>

The required relief **capacity for fire** can be calculated by applying CGA S-1.3-2008, Flow Capacities under fire conditions, section 6.3.2 Liquefied compressed gases, refrigerated fluids, and refrigerated cryogenic fluids in un-insulated or insulated containers. A reasonable length that could be subject to fire is 22 feet. This is because about 22 feet of the piping is outside MC7 and 22 feet is inside.

$Qa= F* Gu * A^{0.82}$

Where:
F = 1.0 correction factor.
Gu = 59. Gas factor from table 1 at 100 psig.
A = surface area. Pi*D*L=3.14*(1.315/12 ft)*22ft =7.6 ft^2.

Substituting, Qa = 310 scfm air.

The relief valve PSV-591-A is an Anderson Greenwood, model 83CM68-8 set at 100 psig. It has a capacity of 366 scfm at 10% overpressure and 432 scfm capacity at 21% overpressure.

ANDERSON GREENWOOD DIRECT SPRING OPERATED PRESSURE RELIEF VALVES
SERIES 60 AND 80

APPENDIX

TYPES 81 AND 83 CAPACITIES[1]

SCFM [NM³/HR] AIR - NATIONAL BOARD CERTIFIED

Set Pressure psig	[barg]	-4 0.049 in² [0.32 cm²]		-6 0.110 in² [0.71 cm²]		-8 0.196 in² [1.26 cm²]		F 0.307 in² [1.98 cm²]		G 0.503 in² [3.25 cm²]		H 0.785 in² [5.07 cm²]		J 1.287 in² [8.30 cm²]	
20	[1.38]	28	[45.0]	62	[99.7]	111	[178.5]	173	[278.2]	284	[456.7]	443	[712.3]	726	[1167.4]
40	[2.76]	43	[69.1]	97	[156.0]	172	[276.6]	270	[434.2]	442	[710.7]	689	[1107.9]	1130	[1817.0]
60	[4.14]	59	[94.9]	133	[213.9]	237	[381.1]	371	[596.6]	607	[976.1]	948	[1524.4]	1554	[2492.6]
80	[5.52]	75	[120.6]	169	[271.8]	301	[484.0]	472	[759.0]	773	[1243.0]	206	[1939.2]	1997	[3211.2]
100	[6.9]	91	[146.3]	205	[329.6]	366	[588.5]	573	[921.4]	938	[1508.3]	1464	[2354.1]	2401	[3860.8]
120	[8.3]	108	[173.7]	241	[387.5]	430	[691.4]	674	[1083.8]	1104	[1775.2]	1723	[2770.6]	2824	[4541.0]
140	[9.7]	124	[199.4]	278	[447.0]	495	[796.0]	775	[1246.2]	1269	[2040.6]	1981	[3185.5]	3248	[5222.8]
160	[11.0]	140	[225.1]	314	[504.9]	559	[898.9]	876	[1408.6]	1435	[2307.5]	2239	[3600.3]	3671	[5903.0]
180	[12.4]	156	[250.9]	350	[562.8]	624	[1003.4]	977	[1571.0]	1600	[2572.8]	2498	[4016.8]	4095	[6584.8]
200	[13.8]	172	[276.6]	386	[620.7]	688	[1106.3]	1078	[1733.4]	1766	[2839.7]	2756	[4431.7]	4518	[7264.9]
240	[16.6]	204	[328.0]	459	[738.1]	817	[1313.7]	1280	[2058.2]	2097	[3372.0]	3273	[5263.0]	5365	[8626.9]
280	[19.3]	237	[381.1]	531	[853.9]	946	[1521.2]	1482	[2383.1]	2428	[3904.2]	3789	[6092.7]	6212	[9988.9]
300	[20.7]	253	[406.8]	567	[911.7]	1011	[1625.7]	1583	[2545.5]	2594	[4171.2]	4048	[6509.2]	6636	[10,670.7]
340	[23.4]	285	[458.3]	640	[1029.1]	1140	[1833.1]	1785	[2870.3]	2925	[4703.4]	4564	[7338.9]	7483	[12,032.7]
380	[26.2]	317	[509.7]	712	[1144.9]	1269	[2040.6]	1987	[3195.1]	3256	[5235.7]	5081	[8170.2]	8330	[13,394.6]
400	[27.6]	333	[535.5]	748	[1202.8]	1333	[2143.5]	2088	[3357.5]	3421	[5501.0]	5339	[8585.1]	8754	[14,076.4]
440	[30.3]	366	[588.5]	821	[1320.2]	1462	[2350.9]	2290	[3682.3]	3752	[6033.2]	5856	[9416.5]	9601	[15,438.4]

2. <u>Piping from LCV-105-A to HV-300-A and HV-301-A</u>.

This section of piping is protected by PSV-109-A on the filter skid. PSV-109-A has a relief capacity of 282 scfm. The piping cannot be isolated from the filter skid and is therefore protected as part of the pressure vessel. A formal pressure vessel engineering note for the filter will ensure that this section of piping is adequately protected.

TYPE RXSO

0 - 400 psig

A CIRCOR CRYOGENICS COMPANY

Rockwood Swendeman®

BRONZE SAFETY RELIEF VALVES

Features

- **Special Teflon® seat, making bubble-tight seals possible to over 90% of set pressures per spec API 527; not applicable to steam.**
- **Adjustable blowdown ring**
- **Meets AD-Merkblatt A2 certified by TÜV**
- **Cleaned and packaged for use in O_2 service in compliance with the CGA specification G-4.1**

  Additional cleaning specifications:

  - **4WPI-SW70003**
  - **ES.660.503**
  - **GS-38**
  - **GS-40**

Application

- **Especially recommended where noxious or expensive liquids or gases place a premium on seal quality.**
- **Stationary Cryogenic storage tanks**
- **Dual Safety relief systems**
- **Overpressure relief of tanks, pipelines, vessels, pumps**
- **Air and gas compressors**
- **Corrosive industrial applications**

Options

- **Large and Extra Large Capacity**

  Consult factory for flow rates
- **BSP threads are available on most sizes**
- **Lever operation**

Technical Data

Operating Ranges

Temperature .....-423°F to +400°F

Set Pressures .....to 400 psig

Materials of Construction

Shell .....Cast Bronze, A.S.M.E SB-62

Base .....Forged Brass, Alloy C37700

Trim .....Copper Alloy

Spring .....Stainless Steel 17-7 PH A.S.T.M., A-313, Type 631

Tests

Each valve is set, tested, retested and sealed at the factory to the customer's specifications.

Sizes

Inlet - 1/2 inch to 2 inch

Outlet - 3/4 inch to 2-1/2 inch

Applicable Codes

Designed and manufactured to meet:

- CGA S-1.2 and S-1.3.
- V-4301 (Cryogenic Non-Oxygen)
- V-4401 (Oxygen)
- ASME sec.VIII
- API 527
- AD-Merkblatt A2
- CRN 0G0591.9

Type RXSO

Dimensions & Characteristics

AIR CAPACITY TABLE

Discharge capacities in cubic feet per minute of air at 10% or 3 PSI, whichever is greater, overpressure.

Inlet Sizes Inches	1/2 3/4	1/2 3/4 1	3/4 1 1-1/4	1 1-1/4 1-1/2	1-1/4 1-1/2 2
Outlet Sizes	3/4 1	1 1-1/4	1-1/4 1-1/2	1-1/2 2	2 2-1/2
Seat Diameter	A 0.750	B 1.000	C 1.250	D 1.500	E 2.000
Flow Area	0.118	0.204	0.326	0.424	0.628
Set Pressure					
10	36	63	100	130	193
15	43	74	118	154	227
20	48	85	136	177	262
25	55	96	154	200	297
30	62	108	172	224	332
35	70	120	192	250	370
40	77	133	212	276	408
45	84	145	232	301	446
50	91	157	252	327	485
55	98	170	271	353	523
60	105	182	291	379	561
65	113	195	311	405	599
70	120	207	331	430	638
75	127	220	351	456	676
80	134	232	371	482	714
85	141	244	391	508	752
90	149	257	410	534	791
95	156	269	430	560	829
100	163	282	450	585	867
105	170	294	470	611	905

Inlet Sizes Inches	1/2 3/4	1/2 3/4 1	3/4 1 1-1/4	1 1-1/4 1-1/2	1-1/4 1-1/2 2
Outlet Sizes	3/4 1	1 1-1/4	1-1/4 1-1/2	1-1/2 2	2 2-1/2
Seat Diameter	A 0.750	B 1.000	C 1.250	D 1.500	E 2.000
Flow Area	0.118	0.204	0.326	0.424	0.628
Set Pressure					
210	321	555	887	1153	1708
215	328	567	907	1179	1747
220	335	580	927	1205	1785
225	343	592	946	1231	1823
230	350	605	966	1257	1861
235	357	617	986	1283	1900
240	364	629	1006	1308	1938
245	371	642	1026	1334	1976
250	378	654	1046	1360	2014
255	386	667	1066	1386	2053
260	393	679	1085	1412	2091
265	400	692	1105	1437	2129
270	407	704	1125	1463	2167
275	414	716	1145	1489	2206
280	422	729	1165	1515	2244
285	429	741	1185	1541	2282
290	436	754	1204	1567	2320
295	443	766	1224	1592	2359
300	450	779	1244	1618	2397
305	458	791	1264	1644	2435

3. Piping from HV-301-A to HV-303-A, the particulate filter.

The particulate filter is protected by PSV-309-A. The required relief capacity can be calculated by applying CGA S-1.3-2008, Flow Capacities under fire conditions, section 6.3.2 Liquefied compressed gases, refrigerated fluids, and refrigerated cryogenic fluids in un-insulated or insulated containers.

$Qa = F * Gu * A^{0.82}$

Where:
F = 1.0 correction factor.
Gu = 64. Gas factor from table 1 at 150 psig.
A = surface area. The vacuum jacket of the filter is 6” OD x 30” tall. A = 4.0 ft^2

Substituting, Qa = 200 scfm air.

The fluid is non-flammable and the filter is suitably isolated from engulfment of fire so the capacity can be reduced to 30% of that calculated. Ref. CGA S-1.3-2008, section 6.3.

New Qa = 0.3*(200 scfm air) = 60 scfm air.

The relief valve capacity of PSV-309-A at 150 psig is 72 scfm air at 10% overpressure and 115 scfm at 25% overpressure.

Table: Relief capacities of Circle Seal Series 5100 relief valves.

Hex Wrench Size

Size	Nominal Cracking Pressure (psig) 450 & Under	451 & Over
⅛″	7/32″	7/32″
¼″	5/16″	¼″
⅜″	5/16″	¼″
½″	½″	⅜″
¾″	9/16″	½″
1″	9/16″	½″
1¼″	¾″	¾″

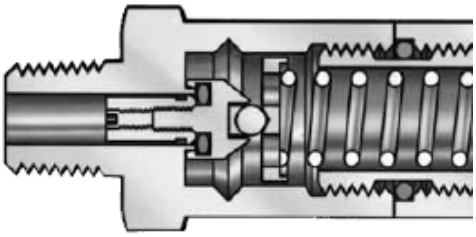

Air Flow Rates (5100–MP)

Inline valves, ⅛″–1″

Crack Pressure *PSIG*	Percent Over Pressure Beyond Cracking *(SCFM air at room temperature)* 10% 1MP	10% 2MP/3MP	10% 4MP	10% 6MP/8MP	25% 1MP	25% 2MP/3MP	25% 4MP	25% 6MP/8MP
15	1.0	1.5	5.0	9.0	3.0	5.0	50	52
20	1.5	2.0	10	12	4.0	5.0	60	63
25	2.0	2.7	25	27	5.4	6.5	65	67
30	2.4	4.6	30	36	6.2	13	68	71
40	3.0	5.5	34	55	6.5	25	72	100
50	3.0	10.5	40	65	8.0	29	74	110
75	4.2	14	50	70	13	38	80	114
100	6.0	25	54	90	17	55	90	130
125	8.5	32	70	120	22	58	110	136
150	10	36	72	150	27	78	115	200
200	13	40	135	190	40	96	250	375
250	16	50	150	210	43	115	280	450
300	20	60	180	225	52	127	400	600
400	25	80	270	270	68	150	600	900
500	36	46	110	190	108	120	320	700
750	45	58	130	210	90	130	420	1200
1000	47	64	170	210	160	160	620	1280
1200	67	74	240	250	200	200	1000	1500
1400	84	84	450	395	—	—	—	—
1600	110	110	720	405	—	—	—	—
1800	160	160	810	510	—	—	—	—
2000	190	190	850	515	—	—	—	—
2200	220	220	900	520	—	—	—	—
2400	240	240	990	675	—	—	—	—

4. Piping from HV-303-A to PCV-220-A.

This section of piping is protected by PSV-202-A on the detector cryostat. PSV-202-A has a relief capacity of 50 scfm at 1.25*(15psig) = 19 psig. Further, there is a rupture disc that protects the piping from pressures above 30 psig. The piping cannot be isolated from the cryostat and is therefore protected as part of the pressure vessel. A formal pressure vessel engineering note for the cryostat will ensure that this section of piping is adequately protected.

5. Regeneration piping from PR-400-H to rest of system.

This section of warm piping is protected from over pressure by PSV-406-H, set at 100 psig and with a capacity of 282 scfm. See catalog cuts of the pressure relief valve below in this section. The source of pressure is the tube trailer through the pressure regulator PR-400-H. PR-400-H will normally be set to supply 50 psig of pressure. However in the event of an incorrect adjustment or a failure it needs to be checked if it could supply a flow with pressure greater than the capacity of PSV-406-H. PR-400-H is a Matheson 3201 regulator with a maximum outlet pressure setting of 100 psig and a maximum flow rate capacity of 150 scfm. See catalog page below. Since the relief valve capacity exceeds the maximum flow rate of the regulator, all regeneration piping downstream is protected.

TYPE RXSO

0 - 400 psig

A CIRCOR CRYOGENICS COMPANY

Rockwood Swendeman®

BRONZE SAFETY RELIEF VALVES

Technical Data

Operating Ranges

Temperature .....-423°F to +400°F

Set Pressures .....to 400 psig

Materials of Construction

Shell .....Cast Bronze, A.S.M.E SB-62

Base .....Forged Brass, Alloy C37700

Trim .....Copper Alloy

Spring .....Stainless Steel 17-7 PH A.S.T.M., A-313, Type 631

Tests

Each valve is set, tested, retested and sealed at the factory to the customer's specifications.

Sizes

Inlet - 1/2 inch to 2 inch

Outlet - 3/4 inch to 2-1/2 inch

Applicable Codes

Designed and manufactured to meet:

- CGA S-1.2 and S-1.3.
- V-4301 (Cryogenic Non-Oxygen)
- V-4401 (Oxygen)
- ASME sec.VIII
- API 527
- AD-Merkblatt A2
- CRN 0G0591.9

Features

- Special Teflon® seat, making bubble-tight seals possible to over 90% of set pressures per spec API 527; not applicable to steam.
- Adjustable blowdown ring
- Meets AD-Merkblatt A2 certified by TÜV
- Cleaned and packaged for use in O_2 service in compliance with the CGA specification G-4.1

  Additional cleaning specifications:

  - 4WPI-SW70003
  - ES.660.503
  - GS-38
  - GS-40

Application

- Especially recommended where noxious or expensive liquids or gases place a premium on seal quality.
- Stationary Cryogenic storage tanks
- Dual Safety relief systems
- Overpressure relief of tanks, pipelines, vessels, pumps
- Air and gas compressors
- Corrosive industrial applications

Options

- Large and Extra Large Capacity

  Consult factory for flow rates
- BSP threads are available on most sizes
- Lever operation

Dimensions & Characteristics

AIR CAPACITY TABLE

Discharge capacities in cubic feet per minute of air at 10% or 3 PSI, whichever is greater, overpressure.

Inlet Sizes Inches	1/2 3/4	1/2 3/4 1	3/4 1 1-1/4	1 1-1/4 1-1/2	1-1/4 1-1/2 2
Outlet Sizes	3/4 1	1 1-1/4	1-1/4 1-1/2	1-1/2 2	2 2-1/2
Seat Diameter	A 0.750	B 1.000	C 1.250	D 1.500	E 2.000
Flow Area	0.118	0.204	0.326	0.424	0.628
Set Pressure					
10	36	63	100	130	193
15	43	74	118	154	227
20	48	85	136	177	262
25	55	96	154	200	297
30	62	108	172	224	332
35	70	120	192	250	370
40	77	133	212	276	408
45	84	145	232	301	446
50	91	157	252	327	485
55	98	170	271	353	523
60	105	182	291	379	561
65	113	195	311	405	599
70	120	207	331	430	638
75	127	220	351	456	676
80	134	232	371	482	714
85	141	244	391	508	752
90	149	257	410	534	791
95	156	269	430	560	829
100	163	282	450	585	867
105	170	294	470	611	905
110	177	307	490	637	944
115	184	319	510	663	982
120	192	331	530	689	1020
125	199	344	549	715	1058
130	206	356	569	740	1097
135	213	369	589	766	1135
140	220	381	609	792	1173
145	228	393	629	818	1211
150	235	406	649	844	1249

Inlet Sizes Inches	1/2 3/4	1/2 3/4 1	3/4 1 1-1/4	1 1-1/4 1-1/2	1-1/4 1-1/2 2
Outlet Sizes	3/4 1	1 1-1/4	1-1/4 1-1/2	1-1/2 2	2 2-1/2
Seat Diameter	A 0.750	B 1.000	C 1.250	D 1.500	E 2.000
Flow Area	0.118	0.204	0.326	0.424	0.628
Set Pressure					
210	321	555	887	1153	1708
215	328	567	907	1179	1747
220	335	580	927	1205	1785
225	343	592	946	1231	1823
230	350	605	966	1257	1861
235	357	617	986	1283	1900
240	364	629	1006	1308	1938
245	371	642	1026	1334	1976
250	378	654	1046	1360	2014
255	386	667	1066	1386	2053
260	393	679	1085	1412	2091
265	400	692	1105	1437	2129
270	407	704	1125	1463	2167
275	414	716	1145	1489	2206
280	422	729	1165	1515	2244
285	429	741	1185	1541	2282
290	436	754	1204	1567	2320
295	443	766	1224	1592	2359
300	450	779	1244	1618	2397
305	458	791	1264	1644	2435
310	465	803	1284	1670	2473
315	472	816	1304	1696	2511
320	479	828	1324	1721	2550
325	486	841	1343	1747	2588
330	493	853	1363	1773	2626
335	501	866	1383	1799	2664
340	508	878	1403	1825	2703
345	515	890	1423	1851	2741
350	522	903	1443	1876	2779

Catalog cut of the PR-400-H regulator

Model 3200 Series

Single-Stage High-Purity/High Flow Brass and Stainless Steel Regulator

Description

High-purity regulators for use with high flow rate applications.

Applications

- Applications requiring a high flow rate, such as purging of large reactor or storage vessels.

Design Features/Components

- High-purity nickel plated brass barstock or 316 stainless steel body
- 316 stainless steel diaphragm
- Panel mountable
- Bonnets are ported and threaded to pipe gases away from the work area
- Available as an in-line regulator or a cylinder regulator

Materials of Construction

Body:	316 stainless steel or nickel plated brass barstock
Bonnet:	Stainless steel
Diaphragm:	Teflon lined 316 stainless steel
Seat:	Kel-F 81
Seals:	Teflon

Specifications

	In-Line Regulator	Cylinder Regulator
Maximum Inlet Pressure:	3000 psig (20,700 kPa)	3000 psig (20,700 kPa)
Maximum Flow Rate:	*See Table Below**	
Flow Capacity (Cv):	1.0	1.0
Operating Temperature:	-40°F to 165°F (-40°C to 74°C)	-40°F to 165°F (-40°C to 74°C)
Inlet Ports:	1/2" NPT Female	1/2" NPT Female
Outlet Ports:	1/2" NPT Female	1/2" NPT Female
Outlet Connection:	None	1/2" tube fitting
Gauge Ports:	1/4" NPT Female	1/4" NPT Female
Bonnet Vent Port:	1/16" FNPT	1/16" FNPT
Shipping Weight:	4 lbs	5 lbs

* Maximum Flow Rates for In-Line Regulators and Cylinder Regulators (at 2500 psig inlet pressure)

Delivery Pressure	Flow Rate
50 psig	100 SCFM (2832 SLPM)
100 psig	150 SCFM (4248 SLPM)
125 psig	200 SCFM (5664 SLPM)
200 psig	250 SCFM (7080 SLPM)

Ordering Information

In-Line Regulator Models

Model Number	Delivery Pressure Range	Delivery Pressure Gauge
Stainless Steel Models		
3200	0-50 psig	0-100 psig
3201	0-100 psig	30"-0-200 psig
3203	0-150 psig	30"-0-300 psig
3204	0-250 psig	0-400 psig
Brass Models		
3240	0-50 psig	0-100 psig
3241	0-100 psig	30"-0-200 psig
3243	0-150 psig	0-400 psig
3244	0-250 psig	0-400 psig

Cylinder Regulator Models

Model Number	Delivery Pressure Range	Delivery Pressure Gauge	Cylinder Pressure Gauge
Stainless Steel Models			
3200-CGA	0-50 psig	0-100 psig	0-3000 psig
3201-CGA	0-100 psig	30"-0-200 psig	0-3000 psig
3203-CGA	0-150 psig	30"-0-300 psig	0-3000 psig
3204-CGA	0-250 psig	0-400 psig	0-3000 psig
Brass Models			
3240-CGA	0-50 psig	0-100 psig	0-3000 psig
3241-CGA	0-100 psig	30"-0-200 psig	0-3000 psig
3243-CGA	0-150 psig	0-400 psig	0-3000 psig
3244-CGA	0-250 psig	0-400 psig	0-3000 psig

Available CGA's:
Brass: 320, 346, 580, 590
Stainless Steel: 320, 326, 330, 346, 580, 590, 660, 705

Options

Model Number	Description
63-2233 316 Stainless Steel Gauge	Inlet Pressure Gauge, 0-3000 psig – For use with Model 3200-3204 Stainless Steel In-Line Regulators
63-3133 Chrome Plated Brass Gauge	Inlet Pressure Gauge, 0-3000 psig – For use with Model 3240-3244 Brass In-Line Regulators
KIT-0204-SA	Panel Mounting Kit
MSP-0012-XX	Inboard Helium Leak Rate Certification
MSP-0013-XX	Combination Inboard/Outboard Helium Leak Rate Certification

FLEXIBILITY ANALYSIS

The flexibility of the newly installed cryogenic piping due to thermal contraction should be considered. The LAr supply piping from the vendor rented dewar to the molecular sieve/copper filter is foam insulated with a PVC jacket. The piping is not held rigidly and the pipe run is free to contract and move the amounts (~0.3") that it will contract.

The piping within the molecular sieve/copper filter is outside of the scope of this piping engineering note. This is a filter design that has been duplicated and used for the LAPD experiment and MicroBooNE. It has its own pressure vessel engineering note.

The existing particulate filter is vacuum jacketed with ½" schedule 10 pipe as the inner pipe and 3" pipe as a vacuum jacket. The inlet leg has a vertical run of 62" and a horizontal run of 33" to HV-300-A. No spiders are installed. The 33" long horizontal run will need to flex up .186" and the vertical run will need to flex over 0.1". The 33" leg can be treated as a cantilevered pipe. The deflection of a cantilevered pipe is:

Deflection = (P*L^3)/(3E*I)
Where:
Deflection = amount the pipe must flex = 0.186"
P = the load applied at the corner which we will solve for
L = pipe length = 33"
E = Modulus of Elasticity = 30E6 psi
I = Moment of Inertia = 0.01431 in^4

Solving for P, P = 6.4 lbs.

The bending moment = P*L = 213 in-lbs.
The pipe stress = M*c/I = (213 in-lbs*0.42 in)/ 0.01431 in^4 = 6252 psi.

The allowable stress for displacement strains, from ASME B31.3-2008, 302.3.5 is Sa = f(1.25Sc + 0.25Sh) = 1.0(1.25*20.0ksi + 0.25*20.0ksi) = 30 ksi.

The calculated pipe stress is less than the allowable so the pipe is fine. The vertical leg which is longer must deflect less, and therefore by inspection, the vertical leg will have even lower stresses.

The outlet leg of the filter has a horizontal run of 25" between HV-300-A and the vacuum break where foam insulation begins. The horizontal pipe will contract 0.075" when at cryogenic temperature. A bellows has been installed on the outer vacuum jacket to allow the vacuum jacket to shrink along with the inner line.

The LAr inlet piping into the cryostat is vacuum jacketed, constructed as shown in drawing F10027431. There is a horizontal run of about 30" from the corner to the vacuum break and a 22" vertical run from the corner to the vacuum break. The 22" vertical run needs to bend to accommodate 0.09" of shrinkage. The 30" long horizontal, 0.06". The inner tube is 0.50" dia. x 0.065" wall stainless steel pipe. The 22" vertical run will be treated as a cantilevered pipe.

Deflection = (P*L^3)/(3E*I)
Where:
Deflection = amount the pipe must flex = 0.09”
P = the load applied at the corner which we will solve for
L = pipe length = 22”
E = Modulus of Elasticity = 30E6 psi
I = Moment of Inertia = (pi*d^3*t)/8 = 0.0032 in^4

Solving for P, P = 2.4 lbs.

The bending moment = P*L = 53 in-lbs.
The pipe stress = M*c/I = (53 in-lbs*0.25 in)/ 0.0032 in^4 = 4141 psi.

During bellows assembly of the outer vacuum jacket over the flange, the technicians will ‘spring’ the horizontal tube towards the corner, biasing it so that shrinkage brings it towards center. Three threaded rods hold the length of the vacuum jacket bellows.

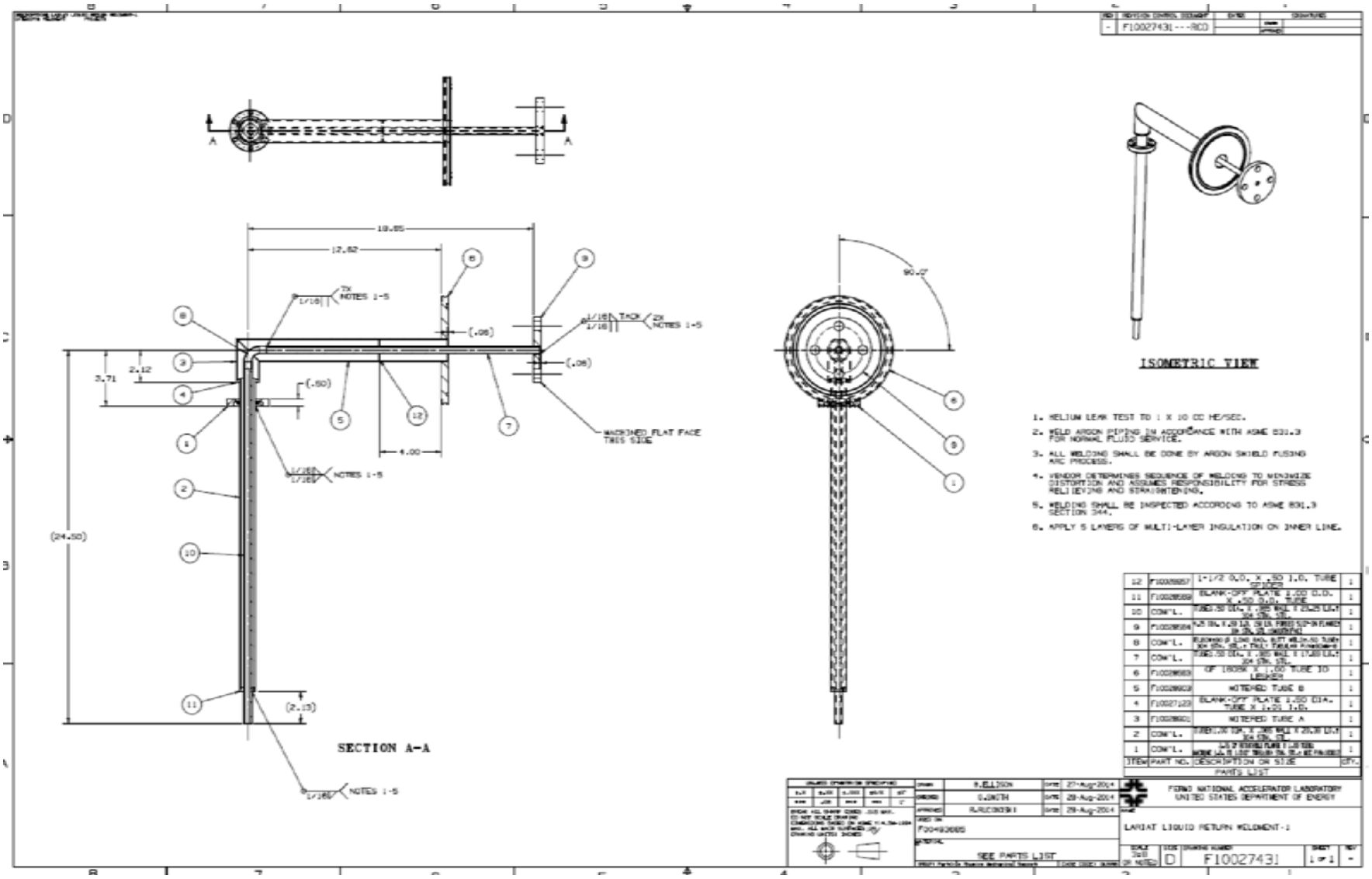
F10027431---RC0
SECTION A-A
ISOMETRIC VIEW
1. HELIUM LEAK TEST TO 1 X 10 CC HE/SEC.
2. WELD ARGON PIPING IN ACCORDANCE WITH ASME B31.3 FOR NORMAL FLUID SERVICE.
3. ALL WELDING SHALL BE DONE BY ARGON SHIELD FUSING ARC PROCESS.
4. VENDOR DETERMINES SEQUENCE OF WELDING TO MINIMIZE DISTORTION AND ASSUMES RESPONSIBILITY FOR STRESS RELIEVING AND STRAIGHTENING.
5. WELDING SHALL BE INSPECTED ACCORDING TO ASME B31.3 SECTION 344.
6. APPLY 5 LAYERS OF MULTI-LAYER INSULATION ON INNER LINE.
PARTS LIST
SEE PARTS LIST
FERMI NATIONAL ACCELERATOR LABORATORY
UNITED STATES DEPARTMENT OF ENERGY
LARIAT LIQUID RETURN WELDMENT-1
F10027431

The gas argon vent pipe coming out of the cryostat is also vacuum jacketed. It was constructed per F10027437. There is a 22” vertical leg from the corner to the vacuum break inside the cryostat. There is a horizontal run of 12.5”, an elbow and then about 30” horizontally to the vacuum break. There are no spiders supporting the inner line. The elbow at the top of the vertical run will move down 0.06” and less than that horizontally. The inner line is 0.5” diameter x 0.065” wall stainless tubing. The tubing is very flexible. The tubing is free to bend the ~0.06” due to thermal contraction. The vacuum jacket is completed by assembling a bellows over the 150 lb. flange. During this bellows assembly, threaded rods are adjusted to ‘spring’ the inner pipe towards the corner giving more free movement for thermal contraction.

Table: Summary of pipe sections analyzed. Allowable stress = 30 ksi.

Pipe Section	**type**	**length**	**Solution or stress**
LAr Supply	1” pipe foam insulated	~100” movements of 0.3”	Free to move at supports
Particulate filter inlet	½” sch. 10 in VJ	33” leg must move 0.186” at end	6.3 ksi
Particulate filter inlet	½” sch. 10 in VJ	62” leg must move 0.1” at end	1.0 ksi
Particulate filter outlet	½” sch. 10 in VJ	25” leg shrinks 0.075” axially	Bellows on VJ
LAr supply to cryostat	1” pipe foam insulated	~50” movements of 0.15”	Free to move at supports
Cryostat supply	0.5” OD x 0.065	22” leg must move 0.09” at end	4.1 ksi
Cryostat supply	0.5” OD x 0.065	30” leg must move 0.06” at end	1.5 ksi
Cryostat gas outlet	0.5” OD x 0.065	22” vertical leg must move 0.06” at end	2.8 ksi
Cryostat gas outlet	0.5” OD x 0.065	43” horizontal leg must move 0.06” at end	0.2 ksi

- F10027437---RCD

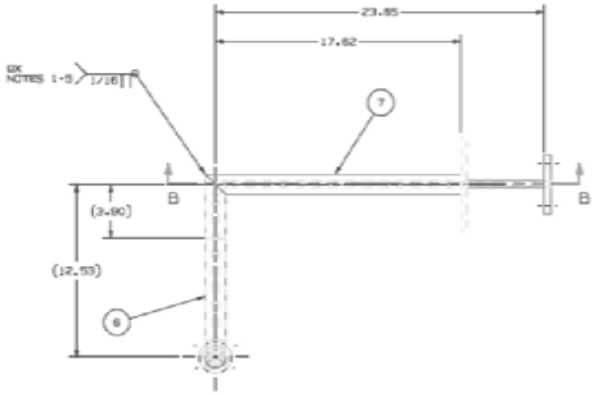

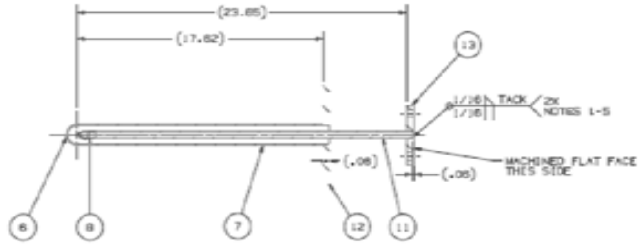

SECTION B-B

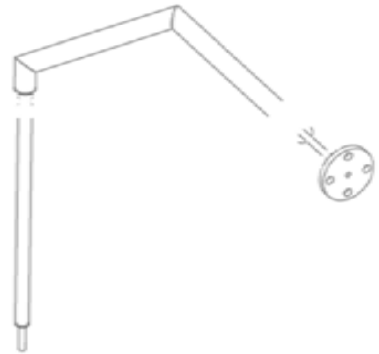

ISOMETRIC VIEW

SCALE=1:4

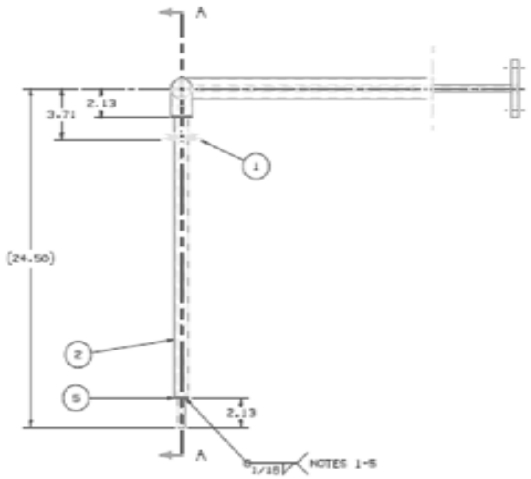

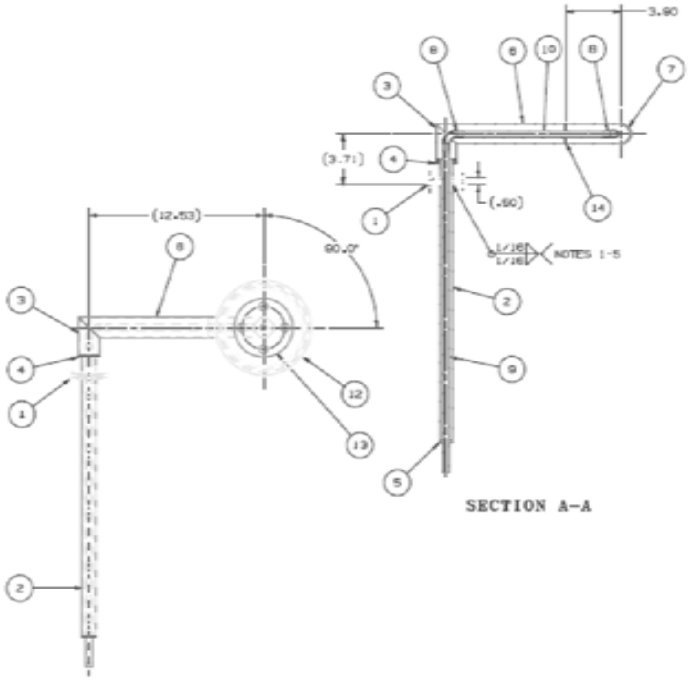

SECTION A-A

NOTES:

1. HELIUM LEAK TEST TO 1 X 10 CC HE/SEC.
2. WELD ARGON PIPING IN ACCORDANCE WITH ASME B31.3 FOR NORMAL FLUID SERVICE.
3. ALL WELDING SHALL BE DONE BY ARGON SHIELD FUSING ARC PROCESS.
4. VENDOR DETERMINES SEQUENCE OF WELDING TO MINIMIZE DISTORTION AND ASSUMES RESPONSIBILITY FOR STRESS RELIEVING AND STRAIGHTENING.
5. WELDING SHALL BE INSPECTED ACCORDING TO ASME B31.3 SECTION 344.
6. APPLY 5 LAYERS OF MULTI-LAYER INSULATION ON INNER LINE.

ITEM	PART NO.	DESCRIPTION OR SIZE	QTY.
14	F10028857	1-1/2 O.D. X .50 I.D. TUBE SPIDER	3
13	F10029564	[illegible]	3
12	F10029563	150 GF 150 X 1.50 I.D. FLANGE	1
11	COM'L.	TUBE .50 DIA. X .065 WALL X 22.63 LG. [illegible]	1
10	COM'L.	TUBE .50 DIA. X .065 WALL X 20.03 LG. [illegible]	1
9	COM'L.	TUBE .50 DIA. X .065 WALL X 23.25 LG. [illegible]	1
8	COM'L.	[illegible]	2
7	F10027097	WITERED TUBE D	1
6	F10027096	WITERED TUBE C	1
5	F10029566	BLANK-OFF PLATE 1.00 O.D. X .50 I.D. TUBE	1
4	F10027123	BLANK-OFF PLATE 1.60 DIA. TUBE X 1.01 I.D.	1
3	F10029564	WITERED TUBE A	1
2	COM'L.	TUBE 17.00 DIA. X .065 WALL X 26.38 LG. [illegible]	1
1	COM'L.	[illegible]	1

PARTS LIST

B.ELLISON	20-Aug-2014	FERMI NATIONAL ACCELERATOR LABORATORY
G.SMITH	20-Aug-2014	UNITED STATES DEPARTMENT OF ENERGY
R.RUCINSKI	20-Aug-2014	

F00493685

LARIAT GAS ARGON WELDMENT

SEE PARTS LIST 1:4 F10027437 1 1 -

WELD DOCUMENTATION

The ASME B31.3 code in paragraph 341.4.1 requires that normal fluid service piping be examined. The piping and welds were visually examined during fabrication. In process weld examination forms were completed for 5% to 10% of the weld joints. This satisfies the Visual examination requirement of the piping code. The piping was constructed using commercial pipe fittings. Welds were standard circumferential pipe welds. No longitudinal pipe welds were made. Welding fit up inspection forms were completed by Skyler Sherwin, Pat Healey, and John Najdzion. Welding was done primarily by Dan Knight, TD/weld shop. Mr. Knight was qualified in GTAW of stainless steel. Other welders used were Daniel Watkins, and unknown but qualified weld shop welders. They all also have been qualified for this type of welding. Qualification records are attached. In process examination was substituted for radiography inspection of welds. Radiography is not normally done at the lab.

The following paragraph is excerpted from tanker trailer #30 documentation by Jerry Makara and Michael Geynisman, dated 10/15/2010. "According to FESHM-5031.1, all pressure piping systems at Fermilab fall under the scope of the ASME/ANSI B31 code series unless specifically excluded. The code series stipulates that pressure piping systems be inspected and tested according to the specific requirements of the code. For ASME/ANSI B3 1.3 Process Piping, which is the relevant code series for this piping system, the required inspection, examination and testing are outlined in Chapter VI, paragraphs 341 through 346. These requirements pertain to piping systems in Normal Fluid service which applies to piping systems at pressures above 150 psi or piping systems below 150 psi with design temperatures lower than -20°F, which is the case for the liquid argon supply piping. The B31.3 piping code allows the use of in-process examination in lieu of radiography on a weld-for-weld basis. In-process inspection forms were created in consultation with the Fermilab weld shop which documents items such as joint preparation and cleanliness, welding machine type, joint fit-up and alignment, filler material, purge gas (purity, flow, and oxygen concentration), inspection of root pass and inspection of final pass." Completed in-process weld inspection forms are included as part of this piping engineering note.

Fermilab

Fermi National Accelerator Laboratory

Technical Division-Machine Shop

Welder Performance Qualification Record

Welder's Name	*Daniel Knight*				**FNAL #**	*12125N*	**ASME #**	*W-5*
Welding Process:	**1st**	*GTAW*	Type	*Manual*	**2nd**		Type	
Performed in accordance with:	*Fermi WPS-SS-8-001*							

Joint:	~~Fillet:~~		~~Production Weld~~	*Test Coupon*		
Groove:	~~Double Welded:~~	~~Yes~~	*No*			
	Single Welded:	~~Metal Fused~~	~~Metal Non-Fused~~	~~Non-Metal~~	*Open Root*	Consumable Insert
		~~With Solid Backing~~	*Without Solid Backing*			

Base Metal:	Specification:	*SA 213, Type 304/304L*	TO	*SA 213, Type 304/304L*	*ASME P #8, Gp 1*	TO *ASME P # 8, Gp 1*
Plate	**Pipe**				**Tube**	
Actual Thickness:	Nominal Diameter:		Actual Diameter		Overall Diameter: *0.250"*	
Qualified Range:	Wt/Schedule:		Qualified Thickness Range		Wall: *0.035"*	
	Actual Thickness		Qualified Diameter Range: .		Qualified Thickness Range: *0.070" Maximum*	
					Qualified Diameter Range: *0.250" Minimum*	

Filler:	**1st Process**		**2nd Process**	
	Specification: *5.9*	Class: *308/308L*	Specification:	Class:
	Diameter(s): *.035, .045, 1/16*		Diameter(s):	
	F #: *6*		F #:	
	Deposit Thickness: *0.035*	Range Qualification: *0.070 Maximum*	Deposit Thickness:	Range Qualification:

Welding Position: *6G*	If Vertical: *Uphill* ~~Down~~				
Gas (Type & Composition:	Shielding: *Argon 99.9%*		Root Side Backing - *Argon 99.9%*		
Electrical Characteristics	Type Current	~~AC~~	~~DCEP~~	*DCEN*	
	~~Transfer-GMAW~~	~~Spray~~	~~Globular~~	~~Pulse~~	~~Short Circuit~~

Visual Inspection					
Appearance:	*Satisfactory*	Undercut:	*None*	Piping Porosity:	*None*

Guided Bend Test					
Type and Figure	Results	Type and Figure	Results	Type and Figure	Results
Test Conducted by:			Lab Test #:		Date:

Radiographic Test			
Results: *Satisfactory*		Per ASME IX-2010	
Radiographer: *Alloyweld Inspection Co., Inc.*	Examiner: *Jennifer Anaya-Level II*	Register # *5088*	Date: *09/24/2013*

Fillet Weld Test Results				
Fracture Test: (Location, Nature, and size of Crack or Tear in Specimen)				
Length of Weld:	Length of Defect:		Percent of Defect	
Macro Test: Fusion				
Appearance: Fillet Size	inch X	inch	☐ Convex	☐ Concave
Test Conducted by:		Lab Test #:		

Test Verified by: *Michael Reynolds - 03993N*	Verification Report #*PRN 174793*	Work#85613

Signature

We certify that the statements in this record are correct and that the test welds were prepared, welded, and tested in accordance with the requirements of **ASME IX-2010** ***Fermi National Accelerator Laboratory***

By: Michael Reynolds – 03993N	Date: *10/03/2013*

Authorized Representative

ALLOYWELD INSPECTION COMPANY, INC.

796 MAPLE LANE PHONE: (630) 595-2145 FAX: (630) 595-2128 BENSENVILLE, ILLINOIS 60106-1585

X-RAY INSPECTION REPORT

READER SHEET

TO:

FERMILAB
KIRK RD & WILSON ST.
BATAVIA, IL 60510

DATE: *SEPTEMBER 24, 2013*
ORDER NO: *PRN174793*
REGISTER NO: *29795*
WORK ORDER NO: *85613*
PAGE *2* OF *4*

INSPECTION INFORMATION

PART NUMBER	*WELDER QUALIFICATION*		MATERIAL	*304/304L*	HEAT CODE
FILM NUMBER	*Y973*	NO OF VIEWS	*2*	NO OF FILM	*(8)CR SHOTS*

PROCESSED IN ACCORDANCE WITH:
ASME SECTION IX-2010
1/4" (4 TUBE MINIMUM) X .035 WALL 304/304L (KNIGHT #5) WPS -SS-8-001

X-RAY SERIAL NUMBER	Accept	Non-Conforming	Cracks	Shrinkage	Shrink Cavities	Porosity	Gas Holes	Voids	Surface	REMARKS OR OTHER DISCONTINUITIES
SN: 1 V1	X									
V2	X									
SN: 2 V1	X									
V2	X									
SN: 3 V1	X									
V2	X									
SN: 4 V1	X									
V2	X									
SN: 5 V1	X									
V2	X									

This report is limited to the defects of the type that can be located with the above method. Any changes to shaded areas make this report

ACCEPTABLE 1 PCS.
NON-CONFORMING 0 PCS.

ALLOYWELD INSPECTION - RADIOGRAPHER SIGNATURE

JENNIFER ANAYA
NAS 410 / MIL-STD-410E LEVEL 3

WELDING: ARC-HELIARC, BRAZING, SILVER AND SOFT SOLDERING • INSPECTION: MAGNETIC PARTICLE, PENETRANT, X-RAY, COMPUTED RADIOLOGY, IMMERSION ULTRASONICS, PASSIVATING, NITAL ETCH, SURFACE TEMPER ETCH, STRESS RELIEF

Fermilab *Fermi National Accelerator Laboratory*

Technical Division-Machine Shop

Welder Performance Qualification Record

Welder's Name	Dan Knight			**FNAL #**	16125	**ASME #**	5
Welding Process:	**1st**	GTAW	Type	Manuel	**2nd**		Type
Performed in accordance with:	Fermi WPS-SS-9-002						

Joint:	~~Fillet:~~		~~Production Weld~~	Test Coupon		
Groove:	Double Welded:	~~Yes~~	No			
	Single Welded:	~~Metal Fused~~	~~Metal Non-Fused~~	~~Non-Metal~~	Open Root	~~Consumable Insert~~
		~~With Solid Backing~~	Without Solid Backing			

Base Metal:	Specification:	SA 213,Type 304/304L	To	SA 213,Type 304/304L	ASME P #8 Gp 1	To	ASME P #8 Gp 1

Plate	**Pipe**		**Tube**
Actual Thickness:	Nominal Diameter:	Actual Diameter:	Overall Diameter: 0.500''
Qualified Range:	Wt/Schedule:	Qualified Thickness Range:	Wall: 0.095
	Actual Thickness:	Qualified Diameter Range:	Qualified Thickness Range: 0.190 Maximum
			Qualified Diameter Range:.500''- Unlimited

Filler:	**1st Process**		**2nd Process**	
	Specification: 5.9	Class: 308/308L	Specification:	Class:
	Diameter(s): .045, 1/16, 3/32		Diameter(s):	
	F #: 6		F #:	
	Deposit Thickness: 0.095	Range Qualification: 0.190 Max.	Deposit Thickness:	Range Qualification:

Welding Position: 6G	If Vertical: Uphill				
Gas (Type & Composition:	Shielding: Argon 99.9%		Root Side Backing	Argon 99.9%	
Electrical Characteristics	Type Current	AC	~~DCEP~~	DCEN	
	Transfer GTAW	Spray	Globular	Pulse	Short Circuit

For Information Only		**Machine Welding**		
Filler Metal Trade Name:		Control:	☐ Visual	☐ Remote Visual
SAW Flux Trade Name:		Arc Voltage Control:	☐ Auto	☐ Other:
Shielding Gas Trade Name:		Joint Tracking:	☐ Yes	☐ No

Visual Inspection					
Appearance:	Satisfactory	Undercut:	None	Piping Porosity:	None

Guided Bend Test					
Type and Figure	Results	Type and Figure	Results	Type and Figure	Results
Test Conducted by:			Lab Test #:		Date:

Radiographic Test			
Results: Satisfactory		Per ASME –IX-2010 and AWS D1.1-06	
Radiographer: Alloyweld Inspection Co., Inc.	Examiner: Jennifer Anaya-Level II	Register # 29795	Date: 09/24/13

Fillet Weld Test Results				
Fracture Test: (Location, Nature, and size of Crack or Tear in Specimen)				
Length of Weld:	Length of Defect:		Percent of Defect	
Macro Test: Fusion				
Appearance: Fillet Size	inch X	inch	☐ Convex	☐ Concave
Test Conducted by: Michael Reynolds # 03993		Lab Test #: Prn # 174793		

We certify that the statements in this record are correct and that the test welds were prepared, welded, and tested in accordance with the requirements of **ASME IX-2010** *Fermi National Accelerator Laboratory*

By: Michael Reynolds # 03993	Date 09/24/13

ALLOYWELD INSPECTION COMPANY, INC.

796 MAPLE LANE PHONE: (630) 595-2145 FAX: (630) 595-2128 BENSENVILLE, ILLINOIS 60106-1585

X-RAY INSPECTION REPORT

READER SHEET

TO:

FERMILAB
KIRK RD & WILSON ST.
BATAVIA, IL 60510

DATE: *SEPTEMBER 24, 2013*

ORDER NO: *PRN174793*

REGISTER NO: *29795*

WORK ORDER NO: *85613*

PAGE *4* OF *4*

INSPECTION INFORMATION

PART NUMBER	*WELDER QUALIFICATION*		MATERIAL	*304/304L*	HEAT CODE
FILM NUMBER	*Y973*	NO OF VIEWS	*2*	NO OF FILM	*(8)CR SHOTS*

PROCESSED IN ACCORDANCE WITH:
ASME SECTION IX-2010
1/2" (4 TUBE MIN) X .095 WALL 304/304L (KNIGHT #5) WPS-SS 9-002

X-RAY SERIAL NUMBER	Accept	Non-Conforming	Cracks	Shrinkage	Shrink Cavities	Porosity	Gas Holes	Voids	Surface	REMARKS OR OTHER DISCONTINUITIES
SN: 1 V1	X									
V2	X									
SN: 2 V1	X									
V2	X									
SN: 3 V1	X									
V2	X									
SN: 4 V1	X									
V2	X						X			
SN: 5 V1	X									
V2	X									

This report is limited to the defects of the type that can be located with the above method. Any changes to shaded areas make this report

ACCEPTABLE 1 PCS.
NON-CONFORMING 0 PCS.

ALLOYWELD INSPECTION - RADIOGRAPHER SIGNATURE

JENNIFER ANAYA
NAS 410 / MIL-STD-410E LEVEL 3

WELDING: ARC-HELIARC, BRAZING, SILVER AND SOFT SOLDERING • INSPECTION: MAGNETIC PARTICLE, PENETRANT, X-RAY, COMPUTED RADIOLOGY, IMMERSION ULTRASONICS, PASSIVATING, NITAL ETCH, SURFACE TEMPER ETCH, STRESS RELIEF

Fermilab

Fermi National Accelerator Laboratory

Technical Division-Machine Shop

Welder Performance Qualification Record

Welder's Name	*Daniel Watkins*			**FNAL #**	*03991N*	**ASME #**	*W-24*
Welding Process:	1st	*GTAW*	Type	*Manual*	~~2nd~~	~~Type~~	
Performed in accordance with:	*Fermi WPS-SS-8-001*						

Joint:	~~Fillet:~~		~~Production Weld~~	*Test Coupon*		
Groove:	~~Double Welded:~~	~~Yes~~	*No*			
	Single Welded:	~~Metal Fused~~	~~Metal Non-Fused~~	~~Non-Metal~~	*Open Root*	Consumable Insert
		~~With Solid Backing~~	*Without Solid Backing*			

Base Metal:	Specification:	*SA 213, Type 304/304L*	TO	*SA 213, Type 304/304L*	*ASME P #8, Gp 1*	TO	*ASME P # 8, Gp 1*
Plate	**Pipe**				**Tube**		
Actual Thickness:	Nominal Diameter:		Actual Diameter		Overall Diameter: *0.250"*		
Qualified Range:	Wt/Schedule:		Qualified Thickness Range		Wall: *0.035"*		
	Actual Thickness		Qualified Diameter Range:		Qualified Thickness Range: *0.070" Maximum*		
					Qualified Diameter Range: *0.250" Minimum*		

Filler:	**1st Process**		**2nd Process**	
	Specification: *5.9*	Class: *308/308L*	Specification:	Class:
	Diameter(s): *.035*		Diameter(s):	
	F #: *6*		F #:	
	Deposit Thickness: *0.035*	Range Qualification: *0.070 Maximum*	Deposit Thickness:	Range Qualification:

Welding Position: *6G*	If Vertical: *Uphill* ~~Down~~				
Gas (Type & Composition:	Shielding: *Argon 99.9%*		Root Side Backing - *Argon 99.9%*		
Electrical Characteristics	Type Current	~~AC~~	~~DCEP~~	*DCEN*	
	~~Transfer GMAW~~	~~Spray~~	~~Globular~~	~~Pulse~~	~~Short Circuit~~

Visual Inspection					
Appearance:	*Satisfactory*	Undercut:	*None*	Piping Porosity:	*None*

Guided Bend Test					
Type and Figure	Results	Type and Figure	Results	Type and Figure	Results
Test Conducted by:			Lab Test #:		Date:

Radiographic Test			
Results: *Satisfactory*		Per ASME IX-2007	
Radiographer: *Alloyweld Inspection Co., Inc.*	Examiner: *Jennifer Anaya-Level II*	Register #	Date:

Fillet Weld Test Results				
Fracture Test: (Location, Nature, and size of Crack or Tear in Specimen)				
Length of Weld:	Length of Defect:	Percent of Defect		
Macro Test: Fusion				
Appearance: Fillet Size inch X inch			❑ Convex	❑ Concave
Test Conducted by:		Lab Test #:		

Test Verified by: *Roger Hiller, 00362N*	Verification Report #	
		Signature

We certify that the statements in this record are correct and that the test welds were prepared, welded, and tested in accordance with the requirements of **ASME IX-2007** ***Fermi National Accelerator Laboratory***

By: Roger Hiller 00362N	Date:
Authorized Representative	

Fermilab

Fermi National Accelerator Laboratory

Technical Division-Machine Shop

Welder Performance Qualification Record

Welder's Name	*Daniel Watkins*			**FNAL #**	*03991N*	**ASME #**	*W-24*
Welding Process:	**1st**	*GTAW*	Type	*Manual*	**2nd**		Type
Performed in accordance with:	*Fermi WPS-SS-8-001*						

Joint:	~~Fillet~~		~~Production Weld~~	*Test Coupon*		
Groove:	~~Double Welded:~~	~~Yes~~	*No*			
	Single Welded:	~~Metal Fused~~	~~Metal Non-Fused~~	~~Non-Metal~~	*Open Root*	Consumable Insert
		~~With Solid Backing~~	*Without Solid Backing*			

Base Metal:	Specification:	*SA 213, Type 304/304L*	TO	*SA 213, Type 304/304L*	*ASME P #8, Gp 1*	TO	*ASME P # 8, Gp 1*
Plate	**Pipe**				**Tube**		
Actual Thickness:	Nominal Diameter:		Actual Diameter		Overall Diameter: *0.250"*		
Qualified Range:	Wt/Schedule:		Qualified Thickness Range		Wall: *0.035"*		
	Actual Thickness		Qualified Diameter Range: .		Qualified Thickness Range: *0.070" Maximum*		
					Qualified Diameter Range: *0.250" Minimum*		

Filler:	**1st Process**		**2nd Process**	
	Specification: *5.9*	Class: *308/308L*	Specification:	Class:
	Diameter(s): *.035, .045, 1/16*		Diameter(s):	
	F #: *6*		F #:	
	Deposit Thickness: *0.035*	Range Qualification: *0.070 Maximum*	Deposit Thickness:	Range Qualification:

Welding Position: *6G*	If Vertical: *Uphill* ~~Down~~				
Gas (Type & Composition:	Shielding: *Argon 99.9%*		Root Side Backing - *Argon 99.9%*		
Electrical Characteristics	Type Current	~~AC~~	~~DCEP~~	*DCEN*	
	~~Transfer GMAW~~	~~Spray~~	~~Globular~~	~~Pulse~~	~~Short Circuit~~

Visual Inspection					
Appearance:	*Satisfactory*	Undercut:	*None*	Piping Porosity:	*None*

Guided Bend Test					
Type and Figure	Results	Type and Figure	Results	Type and Figure	Results
Test Conducted by:			Lab Test #:		Date:

Radiographic Test			
Results: *Satisfactory*		Per ASME IX-2007 and AWS D1.1-06	
Radiographer: *Alloyweld Inspection Co., Inc.*	Examiner: *Jennifer Anaya-Level II*	Register # *6760*	Date: *8/20/2010*

Fillet Weld Test Results			
Fracture Test: (Location, Nature, and size of Crack or Tear in Specimen)			
Length of Weld:	Length of Defect:	Percent of Defect	
Macro Test: Fusion			
Appearance: Fillet Size	inch X inch	☐ Convex	☐ Concave
Test Conducted by:		Lab Test #:	

Test Verified by: *Roger Hiller, 00362N*	Verification Report *#5112010-2RH*	
		Signature

We certify that the statements in this record are correct and that the test welds were prepared, welded, and tested in accordance with the requirements of **ASME IX-2007 & AWS D1.1-06** ***Fermi National Accelerator Laboratory***

By: Roger Hiller 00362N	Date: *8/20/2010*

Roger Hiller 00362N

Authorized Representative

Fermilab

Fermi National Accelerator Laboratory

Technical Division-Machine Shop

Welder Performance Qualification Record

Welder's Name	*Daniel Watkins*			**FNAL #**	*03391N*	**ASME #**	*W-24*
Welding Process:	**1st**	*GTAW*	Type	*Manual*	**2nd**		Type
Performed in accordance with:	*Fermi WPS SS-3,R4*						

Joint:	~~Fillet:~~		~~Production Weld~~	*Test Coupon*		
Groove:	~~Double Welded:~~	~~Yes~~	No			
	Single Welded:	~~Metal Fused~~	~~Metal Non-Fused~~	~~Non-Metal~~	*Open Root*	~~Consumable Insert~~
		~~With Solid Backing~~	*Without Solid Backing*			

Base Metal:	Specification:	*SA 312, Gr 304*	TO	*SA 312, Gr 304*	*ASME P #8, Gp. 1*	TO	*ASME P # 8, Gp. 1*

Plate	**Pipe**		**~~Tube~~**
Actual Thickness:	Nominal Diameter: 4	Actual Diameter: *4.5"*	Overall Diameter:
Qualified Range:	Wt/Schedule: *Sch. 80*	Qualified Thickness Range: *0-0.674*	Wall:
	Actual Thickness: *0.337*	Qualified Diameter Range: *2.875" minimum*	Qualified Thickness Range:
			Qualified Diameter Range:

Filler:	**1st Process**		**2nd Process**	
	Specification: *SFA 5.9*	Class: *ER 308/308L*	Specification:	Class:
	Diameter(s): *1/16"Ø, 3/32"Ø*		Diameter(s):	
	F #: *6*		F #:	
	Deposit Thickness: *0.0337*	Range Qualification: *0-0.674"*	Deposit Thickness:	Range Qualification:

Welding Position: *6G*	If Vertical: *Upward* ~~Down~~				
Gas (Type & Composition:	Shielding: *Argon 99.9%*		Root Side Backing	*Argon 99.9%*	
Electrical Characteristics	Type Current	~~AC~~	~~DCEP~~	*DCEN*	
	Transfer GMAW	~~Spray~~	~~Globular~~	~~Pulse~~	~~Short Circuit~~

Visual Inspection

Appearance:	*Satisfactory*	Undercut:		Piping Porosity:	

Guided Bend Test

Type and Figure	Results	Type and Figure	Results	Type and Figure	Results
Test Conducted by:			Lab Test #:		Date:

Radiographic Test

Results: Satisfactory		Per ASME IX-2007 and AWS D1.1-06	
Radiographer: *Alloyweld Inspection Co., Inc.*	Examiner: *Jennifer Anaya-Level II*	*Register #6760*	Date: *8/20/2010*

Fillet Weld Test Results

Fracture Test:(Location, Nature, and size of Crack or Tear in Specimen)			
Length of Weld:	Length of Defect:	Percent of Defect	
Macro Test: Fusion			
Appearance: Fillet Size	inch X inch	☐ Convex	☐ Concave
Test Conducted by:		Lab Test #:	

Test Verified by: *Michael Reynolds, 03993N*	Verification Report *#5142010-4-MR*	Signature

We certify that the statements in this record are correct and that the test welds were prepared, welded, and tested in accordance with the requirements of **ASME IX-2007** ***Fermi National Accelerator Laboratory***

By: *Roger Hiller, 00362N* 00362N	Date: *8/20/2010*

Fermilab

Fermi National Accelerator Laboratory

Technical Division-Machine Shop

Welder Performance Qualification Record

Welder's Name	*Daniel Watkins*			**FNAL #**	*03991N*	**ASME #**	*W-24*
Welding Process:	**1st**	*GTAW*	Type	*Manual*	**2nd**		Type
Performed in accordance with:	*Fermi WPS-SS-9-002*						

Joint:	~~Fillet:~~		~~Production Weld~~	*Test Coupon*		
Groove:	Double Welded:	~~Yes~~	*No*			
	Single Welded	~~Metal Fused~~	~~Metal Non-Fused~~	~~Non-Metal~~	*Open Root*	Consumable Insert
		~~With Solid Backing~~	*Without Solid Backing*			

Base Metal:	Specification:	*SA 213, Type 304/304L*	TO	*SA 213, Type 304/304L*	*ASME P #8, Gp 1*	TO	*ASME P # 8, Gp 1*

Plate	**Pipe**		**Tube**
Actual Thickness:	Nominal Diameter:	Actual Diameter	Overall Diameter: *0.500"*
Qualified Range:	Wt/Schedule:	Qualified Thickness Range	Wall: *0.095"*
	Actual Thickness	Qualified Diameter Range	Qualified Thickness Range: *0.190" Maximum*
			Qualified Diameter Range: *0.500" Minimum*

Filler:	**1st Process**		**2nd Process**	
	Specification: *5.9*	Class: *308/308L*	Specification:	Class:
	Diameter(s): *.045, 1/16 , 3/32*		Diameter(s):	
	F #: *6*		F #:	
	Deposit Thickness: *0.095*	Range Qualification: *0.190 Maximum*	Deposit Thickness:	Range Qualification:

Welding Position: *6G*	If Vertical: *Uphill* ~~Down~~				
Gas (Type & Composition:	Shielding: *Argon 99.9%*	Root Side Backing - *Argon 99.9%*			
Electrical Characteristics	Type Current	~~AC~~	~~DCEP~~	*DCEN*	
	~~Transfer GMAW~~	~~Spray~~	~~Globular~~	~~Pulse~~	~~Short Circuit~~

Visual Inspection					
Appearance:	*Satisfactory*	Undercut:	*None*	Piping Porosity:	*None*

Guided Bend Test					
Type and Figure	Results	Type and Figure	Results	Type and Figure	Results
Test Conducted by:			Lab Test #:		Date:

Radiographic Test			
Results: *Satisfactory*		Per ASME IX-2007 and AWS D1.1-06	
Radiographer: *Alloyweld Inspection Co., Inc.*	Examiner: *Jennifer Anaya-Level II*	Register #: *6760*	Date: *5/24/2010*

Fillet Weld Test Results				
Fracture Test: (Location, Nature, and size of Crack or Tear in Specimen)				
Length of Weld:	Length of Defect:	Percent of Defect		
Macro Test: Fusion				
Appearance: Fillet Size	inch X	inch	☐ Convex	☐ Concave
Test Conducted by:		Lab Test #:		

Test Verified by: *Roger Hiller 00362N*	Verification Report #*5272010-2*	
		Signature

We certify that the statements in this record are correct and that the test welds were prepared, welded, and tested in accordance with the requirements of **ASME IX-2007 & AWS D1.1-06** ***Fermi National Accelerator Laboratory***

By: Roger Hiller 00362N 00362N	Date: *8/20/2010*
Authorized Representative	

Fermilab

EXHIBIT B
Pressure Testing Permit

Date: 2/24/15

Type of Test: [ ] ~~Hydrostatic~~ [X] Pneumatic

Test Pressure 167 psig **Maximum Allowable Working Pressure** 150 psig

Items to be Tested
1.) Particulate filter between HV-301-A and HV-303-A
See color coded flow diagram

Location of Test MC7 **Date and Time** 2/24/15 0800

Hazards Involved (use Hazard Analysis form FESHM 2060 if more space is required)
The pressure is low and the volume of the filter is only ~`0.4 cubic feet. The biggest hazard is accidental pressurization of the cryostat which only has a MAWP of 30 psig or the Molecular Sieve filter with MAWP of 100 psig.

Safety Precautions Taken
Relief valve on source set to 184 psig. Valves HV-301-A and HV-303-A will be closed. A vent valve on the cryostat will be opened to ensure that the cryostat does not inadvertently get pressurized as part of this test (If HV-303-A leaks through). A vent valve on the filter will be opened to protect it in case HV-301-A leaks.

Special Conditions or Requirements
Pressurize to ~85 psig, check for leaks. Pressurize to 167 psig. Hold for 10 minutes. Reduce to 150 psig. Hold for at least 10 minutes while checking for leaks. Monitor filter vacuum jacket through out test.

Qualified Person and Test Coordinator Russ Rucinski, PPD/Mechanical Dept.
Dept/Date

Division/Section Safety Officer Eric McHugh 13747N
Dept/Date PD ES+H 2/24/15

Results Piping Section Passed.

Witness 13747N **Dept/Date** PD ES+H 2/24/15
(Safety Officer or Designee)

* Must be signed by division/section safety officer prior to conducting test. It is the responsibility of the test coordinator to obtain signatures.

WARNING. This paper copy may be obsolete soon after it is printed. The current version of this FESHM Chapter is found at http://www-esh.fnal.gov/pls/default/esh_manuals.html.

Reference:
Ashcroft 4" 0-200 psig gauge

Pressure Test Results
Test Item Mfr: Fermilab
Model: Cryo Particulate filter
Serial# : N/A

Revision: 2/13/13 RKB
Test date: 2/24/2015
Test range: 0-167psig

Time	Pressure (psig)	Results Notes	Intitials	Witness
0815	20.0	Residual pressure from overnight. Cryostat pressure check: 30.3psia	RKB	RAR
0825	20.0	Start test. Cryostat pressure: 30.3 psia	RKB	RAR
0832	85.0	Snoop check : OK Cryostat pressure: 30.3 psia	RKB	RAR
0833	85.0	Isolate Cryostat pressure: 30.3 psia	RKB	RAR
0843	85.0	OK; Increasing to target Cryostat pressure: 30.3 psia	RKB	RAR
0847	167.0	Isolated Cryostat pressure: 30.3 psia	RKB	RAR
0857	167.0	OK: Passed test. Cryostat pressure: 30.3 psia	RKB	RAR
0900	150.0	Reduced press. for post test snoop chk. Cryostat pressure: 30.3 psia	RKB	RAR
0910	150.0	Snoop check OK. Cryostat pressure: 30.3 psia	RKB	RAR
0935	~10	open HV-301A to equallize with mole sieve vessel for next test.	RKB	RAR

Fermilab

EXHIBIT B
Pressure Testing Permit

Date: 2/24/15

Type of Test: [ ] ~~Hydrostatic~~ [X] Pneumatic

Test Pressure 112 psig **Maximum Allowable Working Pressure** 100 psig

Items to be Tested

1.) LAr supply pipe: 1" sch. 10 pipe, foam insulated x ~30 feet, from outside MC7 to filter
2.) Molecular Sieve & Copper filter inner vessel (80 liters volume)
3.) LAr supply pipe: ½" sch.10 pipe up to HV-300-A and HV-301-A.
4.) Regeneration piping, 1" OD x 0.095" wall from outside MC7 to Mole Sieve filter.

See color coded flow diagram

Location of Test MC7 **Date and Time** 2/24/15 0930

Hazards Involved (use Hazard Analysis form FESHM 2060 if more space is required)

The pressure of 112 psig is very low and the hazards from it are low as well. The biggest hazard is accidental pressurization of the cryostat which only has a MAWP of 30 psig.

Safety Precautions Taken

Relief valve on source set to 120 psig. Valves HV-300-A and HV-301-A will be closed. A vent valve on the cryostat will be opened to ensure that the cryostat does not inadvertently get pressurized as part of this test (If HV-300-A leaks through).

Special Conditions or Requirements

Pressurize to ~56 psig, check for leaks. Pressurize to 112 psig. Hold for 10 minutes. Reduce to 100 psig. Hold for at least 10 minutes while checking for leaks.

Qualified Person and Test Coordinator Russ Rucinski, PPD/Mechanical Dept.
Dept/Date

Division/Section Safety Officer Eric McHugh 13747N
Dept/Date PD ES+H 2/24/15

Results Unit Sections were tested with a portion that had small known leaks (scheduled for later repair) left in place to provide a route to pressurize attached sections which were isolated for retention tests. The adjacent sections passed. The Regeneration piping between HV-422A and HV-427A and HV-411A will be re-tested after repairs. RRR

Witness 13747N **Dept/Date** PD ES+H 2/24/15
(Safety Officer or Designee)

* Must be signed by division/section safety officer prior to conducting test. It is the responsibility of the test coordinator to obtain signatures.

WARNING. This paper copy may be obsolete soon after it is printed. The current version of this FESHM Chapter is found at http://www-esh.fnal.gov/pls/default/esh_manuals.html.

Reference:
Ashcroft 4" 0-200 psig gauge

Pressure Test Results
Test Item Mfr: Eden Cryo
Model: Mole Sieve Vessel piping
Serial# : 8

Revision: 2/13/13 RKB
Test date: 2/24/2015
Test range: 0-112psig

Time	Pressure (psig)	Results Notes	Intitials	Witness
0930	~10	Start	RKB	RAR
0935		Open HV-301A to equalize pressure from filter ass'y.	RKB	RAR
0948	56.0	Increased to first pressure step.	RKB	RAR
0953	58.0	Isolated Regen pipe section (known leaks) at HV-422A, 427A, &411A.	RKB	RAR
0953	58 (55/57)	upstream test gauge PI-test (downstream: PI-410H / PI-652A)	RKB	RAR
1005	56 (55 / 57)	HV-422A found not tight closed, bleeding into regen section; corrected	RKB	RAR
1015	55 (55 / 57)	Slight drop upstream side; downstream side holding	RKB	RAR
1027	112 (112 / 113)	Increase to target test pressure; re-isolated regen piping	RKB	RAR
1037	108 (112 / 113)	Upstream leaks found at plugged relief and VCR fitting; corrected	RKB	RAR
1043	112 (112 / 113)	Re-pressurized & isolated.	RKB	RAR
1053	110 (112 / 113)	Slight drop upstream side; downstream side holding	RKB	RAR
1059	112 (112 / 113)	Re-pressurized & isolated.	RKB	RAR
1110	110 (112 / 113)	Slight drop upstream side; downstream side holding	RKB	RAR
1116	112 (112 / 113)	Pressurized with LCV-105A closed	RKB	RAR
1126	111.5 (112 / 113)	Smaller drop. Found leak down stream of LCV-105A; corrected.	RKB	RAR
1132	112 (112 / 113)	Re-pressurized & isolated. LCV-105A open	RKB	RAR
1142	112 (112 / 113)	Test sections passed (See note below)	RKB	RAR
		Note: This test was performed with a known leak at thermowells in the		
		regen piping section. This portion was left in place to provide a path to		
		pressurize & test piping on either adjacent sides. The leaking section was		
		isolated by HV-422A, 411A, & 427A valves during the retention portions of		
		testing. The regen piping section between those valves will need to be re-		
		tested after repairs have been completed. Pressures for section downstream		
		of the isolated section were recorded from PI-410H & PI-652A and appear		
		within parentheses in the Pressure column.	RKB	RAR
		Note: Vacuum readings observed during testing did not show any sign of		
		internal leakage to the vessel's insulation vacuum space.	RKB	RAR

Piping attached to Cryostat for LArIAT

Fermilab

EXHIBIT B
Pressure Testing Permit

Date: 2/24/15

Type of Test: ~~[ ] Hydrostatic~~ [X] Pneumatic

Test Pressure 35 psig **Maximum Allowable Working Pressure** 30 psig

Items to be Tested
1.) LAr Piping attached to the LArIAT cryostat. From HV-303-A to the cryostat to PCV-220-A.
See color coded flow diagram

Location of Test MC7 **Date and Time** 2/24/15 1330

Hazards Involved (use Hazard Analysis form FESHM 2060 if more space is required)
The pressure is low. The cryostat vessel is contained within a vacuum jacket. Stored energy is equivalent to 0.1 lb of TNT. That isn't very much, a large fire cracker.

Safety Precautions Taken
Relief valve on source set to 38 psig. Will need to have relief devices on cryostat blanked off. Stay at least 5 feet from cryostat and do not stand near large flanged head.

Special Conditions or Requirements
Pressurize to ~17 psig, hold for 10 minutes. Check for leaks. Pressurize to 35 psig. Hold for 10 minutes. Reduce to 30 psig. Hold for at least 10 minutes while checking for leaks.

Qualified Person and Test Coordinator Dept/Date Russ Rucinski, PPD/Mechanical Dept.

Division/Section Safety Officer Dept/Date Eric McHugh 3747N PD Restit 2/24/15

Results Unit Passes.

Witness 3747N **Dept/Date** 2/24/15
(Safety Officer or Designee)

* Must be signed by division/section safety officer prior to conducting test. It is the responsibility of the test coordinator to obtain signatures.

WARNING. This paper copy may be obsolete soon after it is printed. The current version of this FESHM Chapter is found at http://www-esh.fnal.gov/pls/default/esh_manuals.html.

Reference:
USG 4" 0-100 psig
W9:41 AM 0-150 psia #UU13990

Pressure Test Results
Test Item Mfr: PHPK
Model:LArIAT Cryostat
Serial# : 4821

Revision: 2/13/13 RKB
Test date: 2/24/2015
Test range: 0-35psig
(w/ insul. vac.)

Time	Pressure	Results Notes	Intitials	Witness
1336	29.5 (43.5)	Equalize pressure with previous test volume (Mole Sieve Vessel)	RKB	RAR
1345	29.5 (43.5)	Isolated from Mole Sieve at HV-301A & 300A Vac: 56.7 mT	RKB	RAR
1346		Increasing pressure to Test target. Vac: 58.6 mT	RKB	RAR
1357	35.2 (49.2)	Isolated & holding. Vac: 60.7 mT	RKB	RAR
1407	35.1 (49.2)	unit passes; Vac: 64.5 mT	RKB	RAR
		Note: Wallace & Tiernan 0-150 psia 6" test gauge (PI-218A) readings shown		
		in parentheses in pressure column.		

Piping attached to Cryostat for LArIAT

Equivalent pounds of TNT from a pneumatic leak test pipe explosion
Ref.: Industrial Risk Insurers Information Bulletin, March 2, 1992, #1M.8.0.1.1
and Article 5.1 of PCC-2-2006 gw 4/9/2007

IRIIB Eq. 18E

$We = 4.63E\text{-}8 * P_1 * V_1 * \ln(P_1/14.7)$ TNT equivalent in tons

P_1 = internal pressure, psia, = psig + 14.7

V_1 = volume in ft^3

PCC-2
Article 5.1

$E = 360 x P_{at} x V[1-(P_a/P_{at})^{0.268}]$ ft-lbs
TNT=E/1488617 lbs

V_1, ft^3	P_1, psia	Eq 18E tons TNT	Eq. 18E lbs TNT	PCC-2 lbs TNT
20	50	0.00006	0.11	0.07
input	program calculate			

Rough damage information with regard to overpressure:

0.2 psi - breaks windows
0.5 - 1.0 psi - shatters windows with body penetrating velocity
1.0 - 2.0 psi - destroys typical wood frame structures
2.0 - 3.0 - blows in brick facing of steel frame building
5.0 psi - eardrum rupture
8.0 psi - fatal head engury (due to being propelled into stationary objects)
10.0 psi - serious lung damage
11 - 15.0 psi - fatal bodily injury (lung rupture or internal organs displacement)

Evacuation distances:

≤ 13 pounds TNT - 100 feet
> 13 pounds ≤ 26 pounds TNT - 200 feet
> 26 ≤ 32 pounds TNT - 300 feet

WARNING. This paper copy may be obsolete soon after it is printed. The current version of this FESHM Chapter is found at http://www-esh.fnal.gov/pls/default/esh_manuals.html.