LArIAT Front End Electronics Update

July 11, 2014

Carl Bromberg, Dean Shooltz

Overview of LArIAT Front End Electronics
(MSU supplies the components in blue)

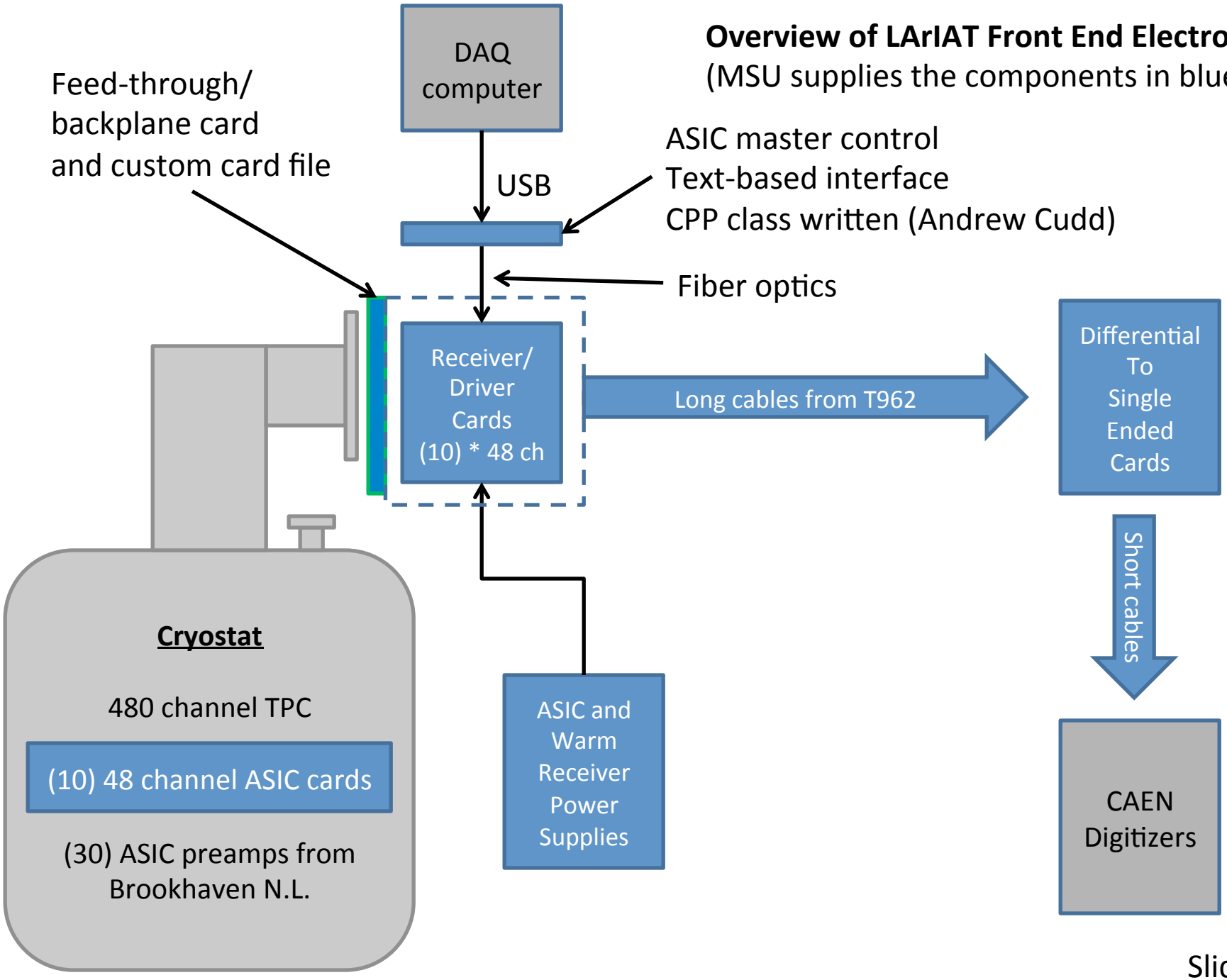

ASIC Motherboards

Cards are manufactured and assembled.
14 cards were produced. We need 10 for LArIAT TPC.
Very nice workmanship (Advanced Circuits, same company used for TPC wire frames)
Next step: testing. We plan on full testing at liquid nitrogen temperature.

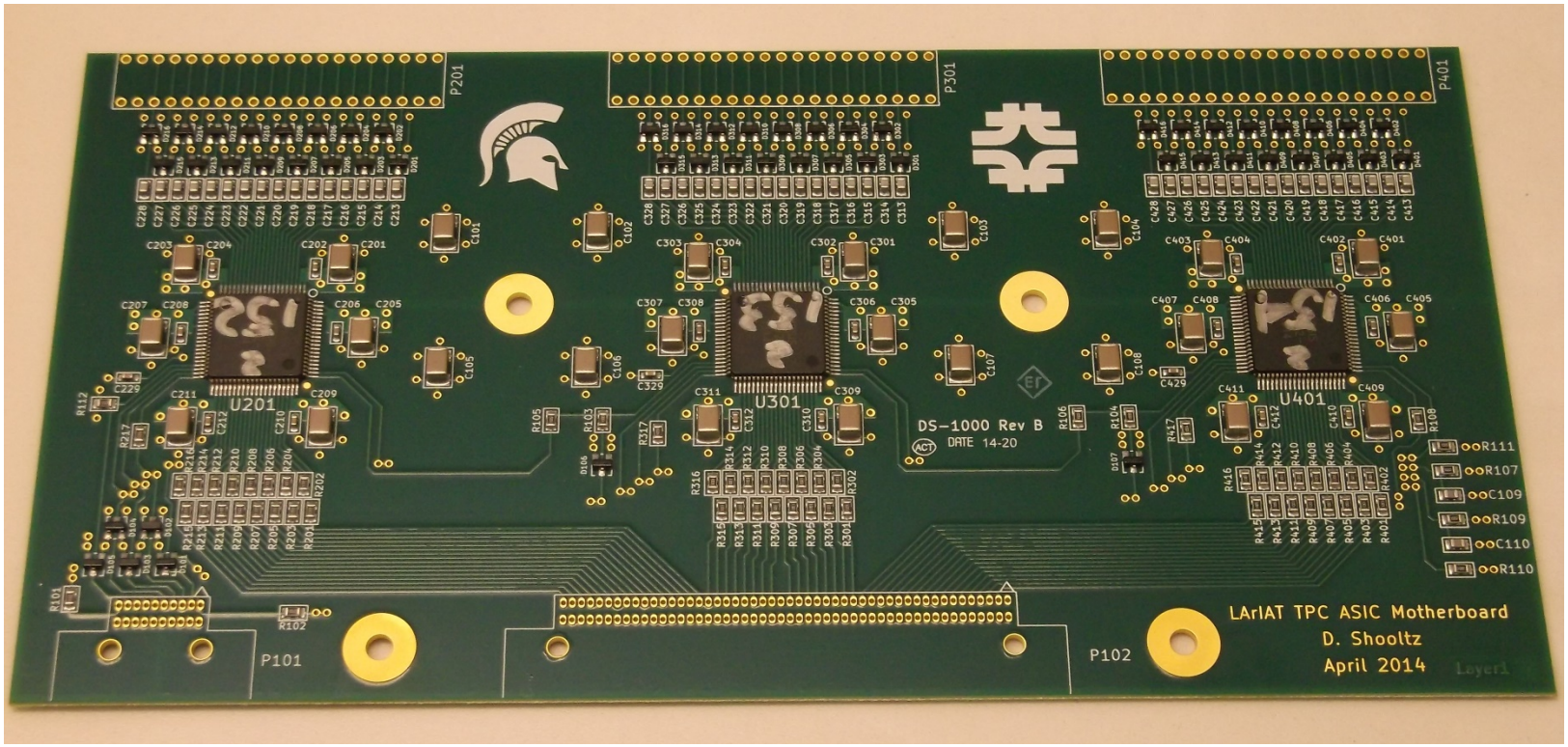

Cryostat feedthrough/backplane

Design overview showing card, rear plate of box, and cryostat flange.
The PCB will have reinforcement bars added to prevent flexing during installation.
Warm receiver/ ASIC Power and Control cards plug directly into this card.

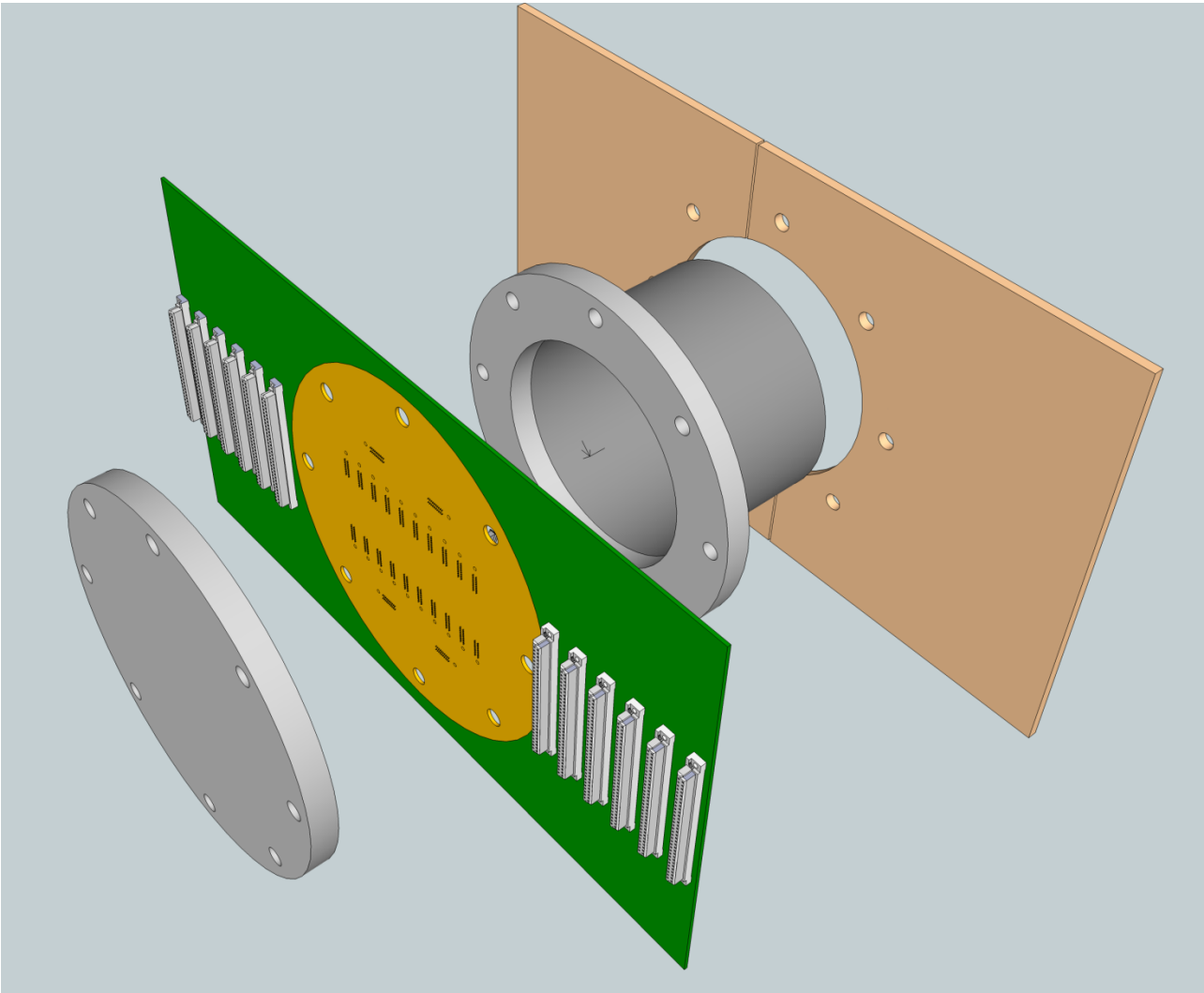

Cryostat feedthrough/backplane

Final design is 17” x 10” 8-layer card.
Outside layers are mostly uninterrupted ground fill.
Design allows for 12 mil traces and spaces for signals, much larger traces for power.
Design is mostly complete- just adding/moving some mounting and vent holes
and adding power distribution for the 10 warm receiver cards.

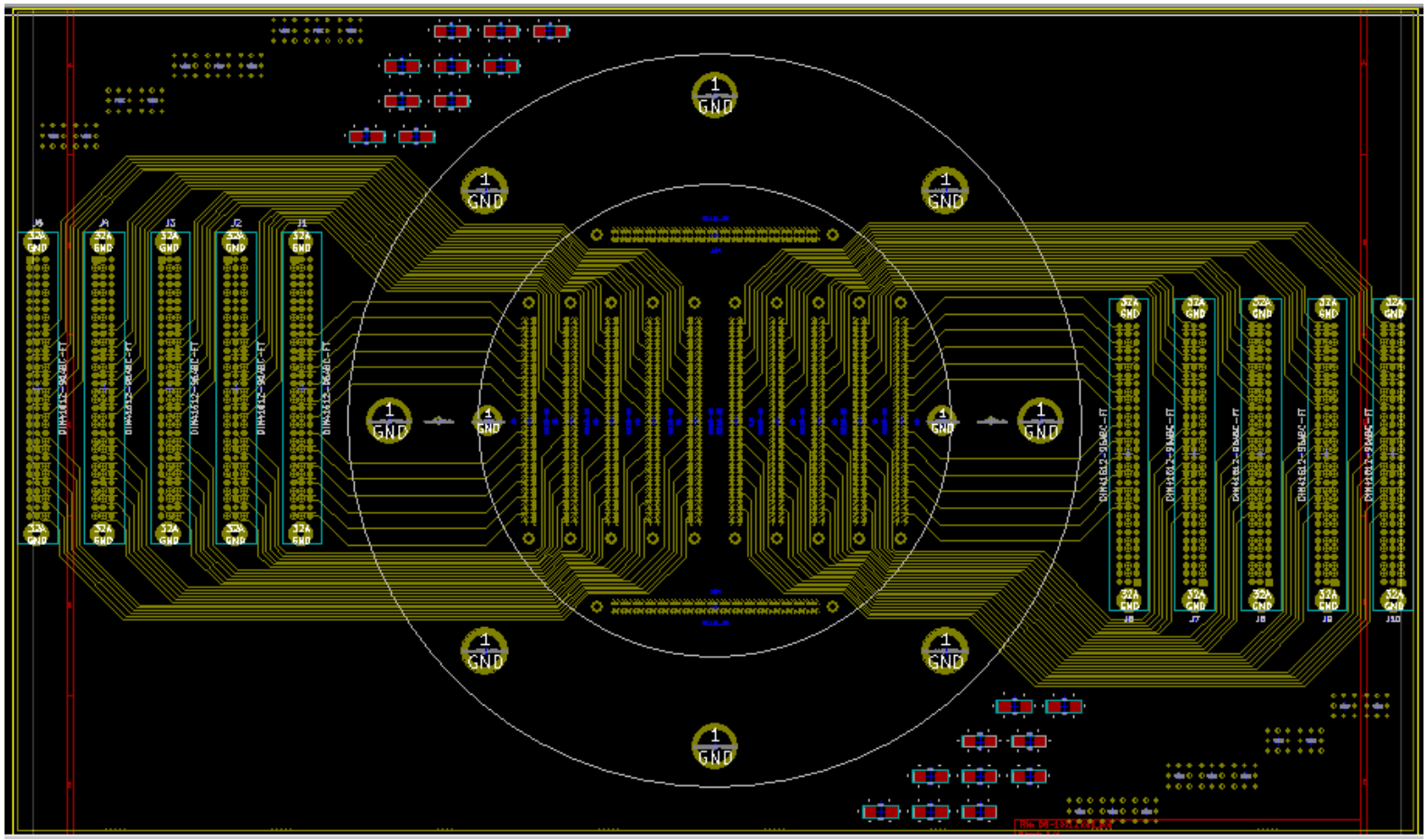

LArIAT TPC feed-through. Typical signal layer shown.

Warm receiver/Driver card layout

Each warm receiver card supplies power and control signals to one 48 channel ASIC motherboard.
The ASIC control lines are routed to the front panel.
From the front panel the ASIC control lines are daisy chained and then connected to inexpensive fiber optic links.
Currently working on low-noise 1.8 volt regulator design for ASIC power.
Currently selecting the differential amplifiers- THS4141 used in ArgoNeuT appears to be going obsolete.
→ The AD8132 / AD8137 from Analog Devices look like a good options- will test in signal chain before committing.

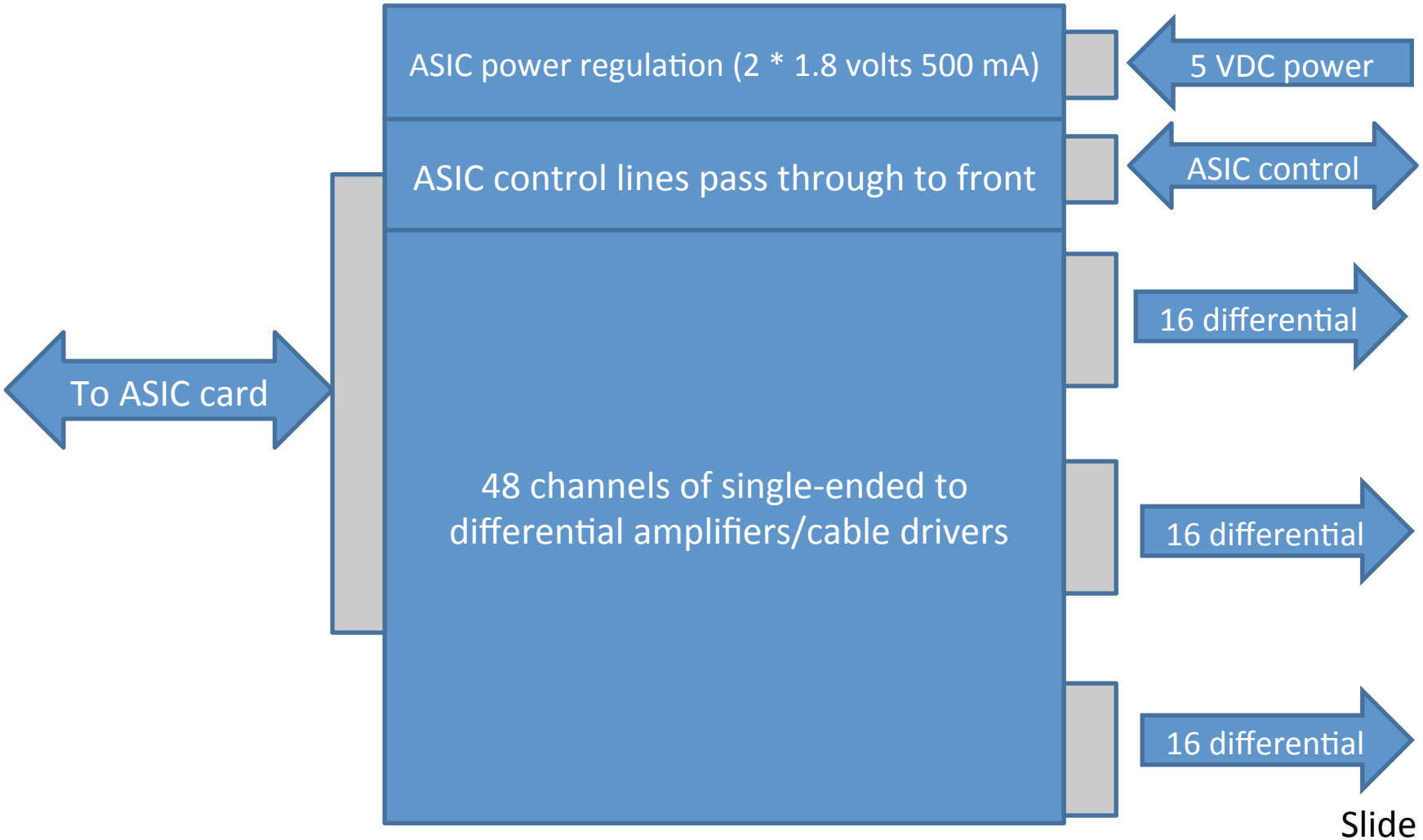

D2S (differential to single-ended) card layout

Card supplies a simple function- no major design challenges.
Cards will reside next to CAEN ADCs in VME crate.
Cards will be supplied from private 5 volt power supplies.
Outputs to CAEN units will be on ~30 cm ribbon cables (rear of D2S to front of CAEN)

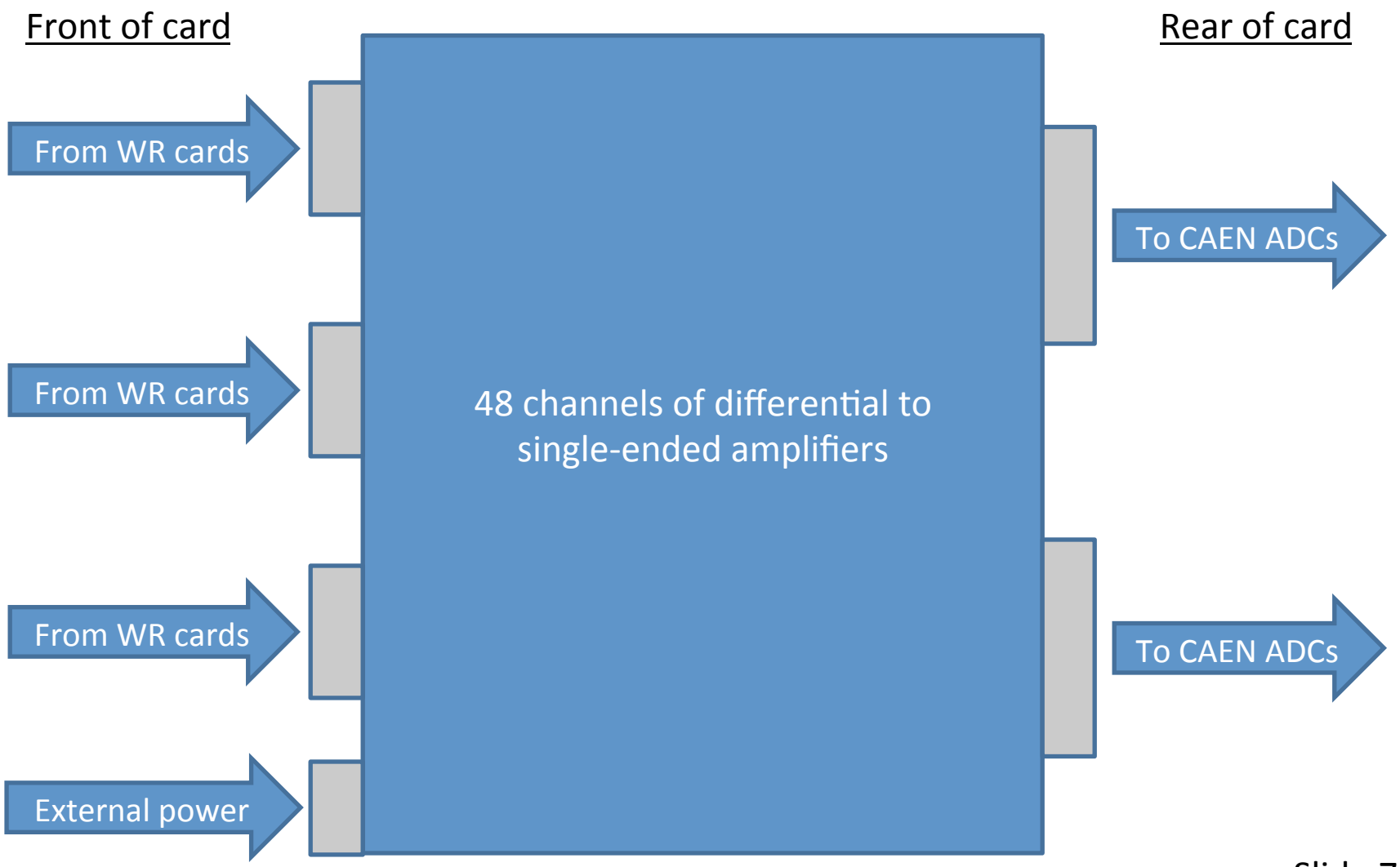

Cabling and Connectors

Inside cryostat, from ASIC motherboards to feedthrough

Solid core FEP insulated ribbon cable. Will order soon.
Connectors are in hand.

Warm receiver to D2S (long cable run from cryostat to the CAEN digitizer rack)

The very nice cabling from ArgoNeuT will span from cyrostat to digitizers- we will use this cable.
PCB-mount connectors for both sides are in hand.

D2S to CAEN digitizers

The CAEN V1740s use a connector only available from ERNI (Europe).
ERNI will only sell complete cable assemblies that are made-to-order.
→ We will need 16 cables, quote for 20 cables is $700, 2 weeks delivery.
→ Some preference for using standard 3M connectors on the D2S side.
(we would have to modify pre-made ERNI cables to add standard connectors)

Tentative Schedule

ASIC motherboards

Already manufactured 14 cards (10 for TPC plus spares).
Testing can start soon- MSU will use the Long-Bo ADF-2 readout for initial testing.

Feed-through / backplane card

Finalize the PCB layout (one week).
(Have been using wiggle room in the overall LArIAT schedule (as available) for design tweaks.)
Manufacture (expect 2 weeks turnaround).
Populate and test (expect 3 days).

Warm receiver cards

Currently working on low-noise 1.8 volt regulators for the ASIC power (expect 1 week).
PCB layout (expect 2 weeks).
PCB manufacture (expect 2 weeks turnaround).
Populate prototype channels and test (expect 1 week).

D2S cards

Design is straightforward.
Signal exit to D2S at rear (due to front panel space constraints for VME 6U sized cards).
Planning on using standard 3M 810/820 series connectors attached to custom ERNI cabling.
PCB layout (2 weeks).
PCB manufacture (expect 2 weeks turnaround).
Populate prototype channels and test (1 week).

Overall

If this work is approached linearly, it will take about 8 weeks to complete.

Tentative Schedule

ASIC motherboards

Already manufactured 14 cards (10 for TPC plus spares).
Testing can start soon- MSU will use the Long-Bo ADF-2 readout for initial testing.
(available for TPC/cryostat logistics)

Feed-through / backplane card

Finalize the PCB layout (one week).
(Have been using wiggle room in the overall LArIAT schedule (as available) for design tweaks.)
Manufacture (expect 2 weeks turnaround).
Populate and test (expect 3 days).
(+3 weeks , Aug. 1 completion, available for TPC/cryostat logistics)

Warm receiver cards

Currently working on low-noise 1.8 volt regulators for the ASIC power (expect 1 week).
PCB layout (expect 2 weeks).
PCB manufacture (expect 2 weeks turnaround).
Populate prototype channels and test (expect 1 week).
CERN (~4 weeks incl. PCB layout, + 2 weeks) Sept. 15 ADF2 testing

D2S cards

Design is straightforward.
Signal exit to D2S at rear (due to front panel space constraints for VME 6U sized cards).
Planning on using standard 3M 810/820 series connectors attached to custom ERNI cabling.
PCB layout (2 weeks).
PCB manufacture (expect 2 weeks turnaround).
Populate prototype channels and test (1 week).
(Oct. 15 completion)

Overall

If this work is approached linearly, it will take about 8 weeks to complete.
(12 weeks to complete)

Backup slides

New feed-through/ backplane design

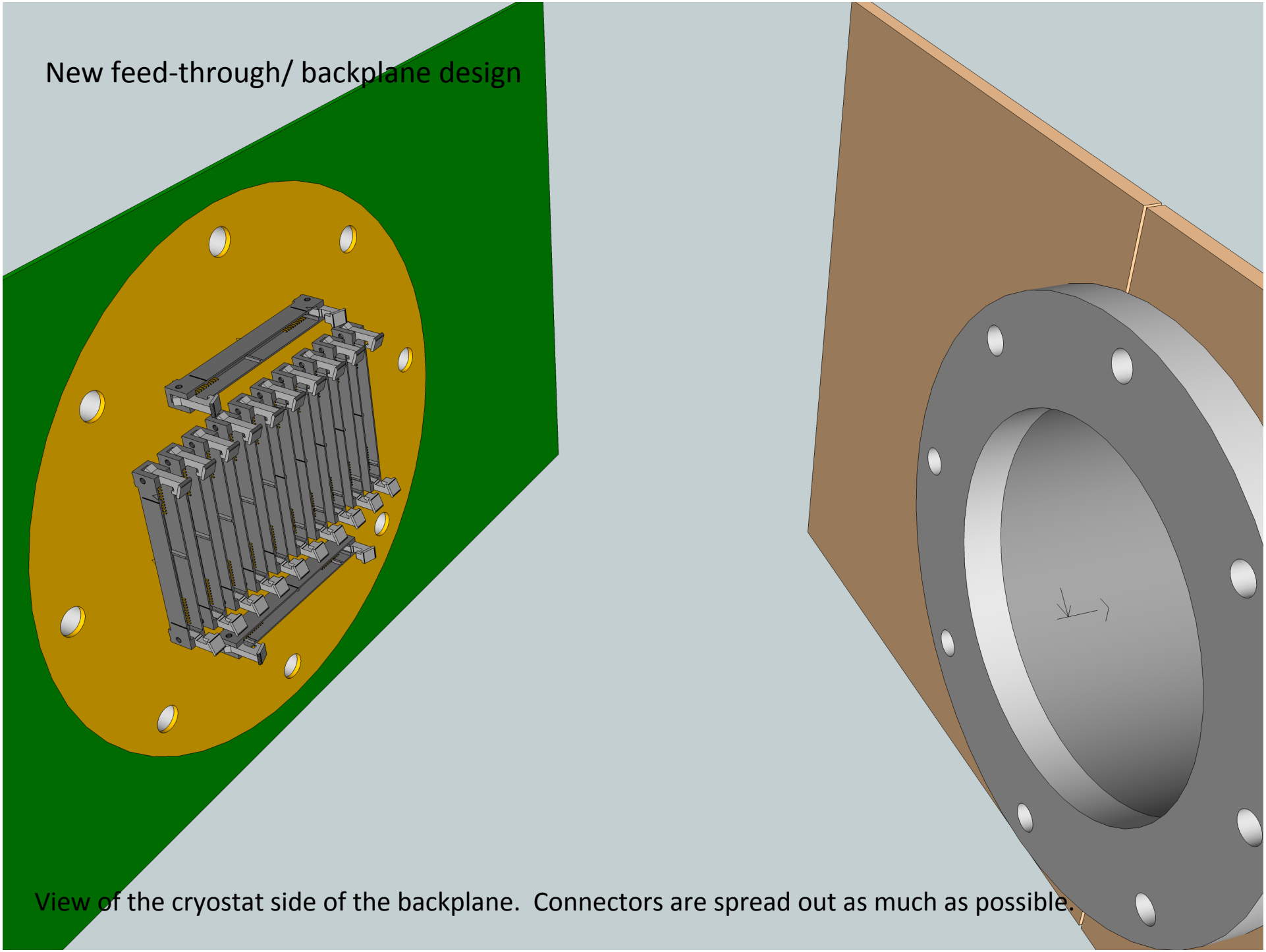

View of the cryostat side of the backplane. Connectors are spread out as much as possible.

Cryostat feedthrough/backplane
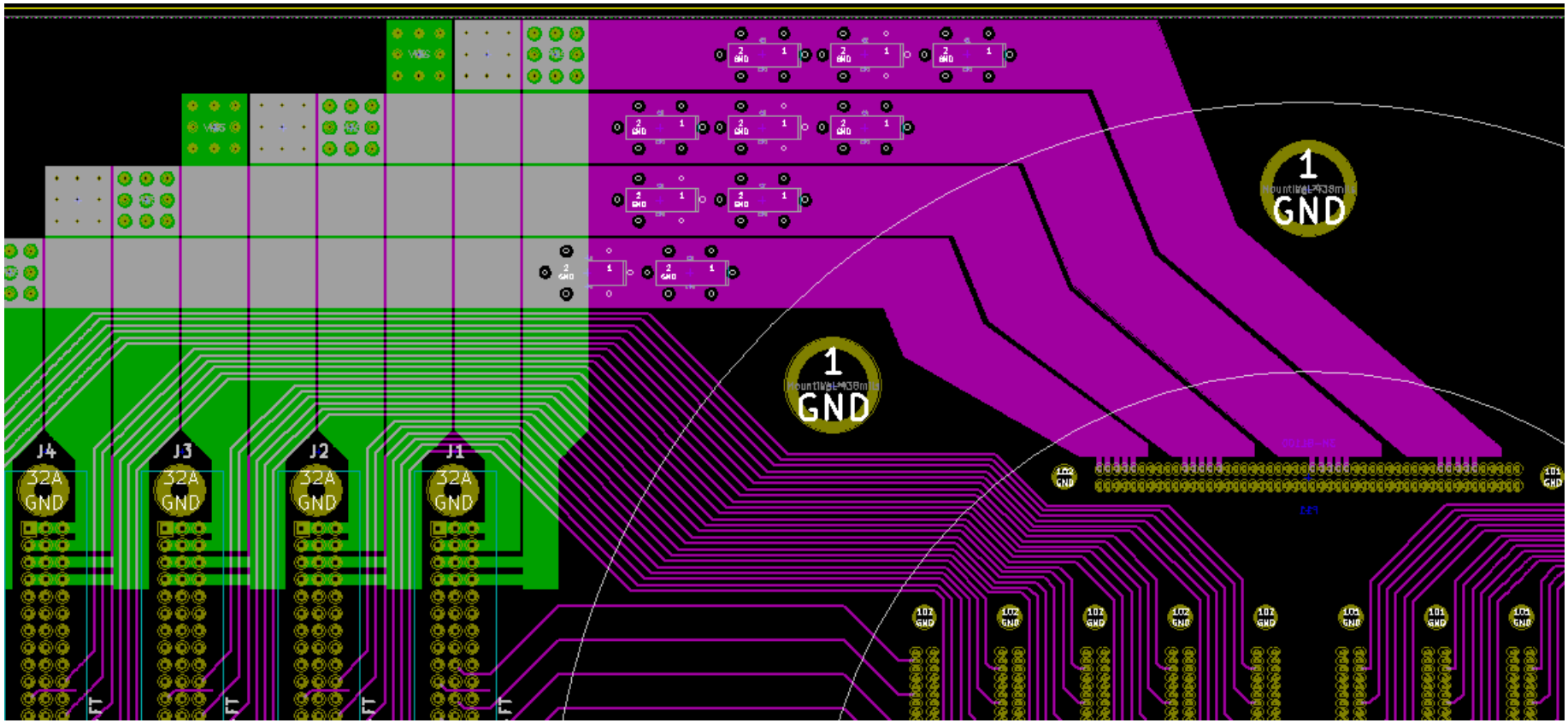
Power leads to ASIC cards can be quite wide to minimize impedance.
Tantalum filter caps will be installed just before power leads enter the cryostat.