Text

REV	DESCRIPTION	DRAWN / APPROVED	DATE / DATE
A	CRYOSTAT RAISED 24" GENERAL FIELD CHECK DIMENSIONAL CHANGES	G SMITH	08-NOV-2013
			12-NOV-2013
B	UPDATE BEAMLINE LAYOUT TO SHOW CRYOPLANT	G SMITH	29-DEC-2013
		G SMITH	29-DEC-2013
C	UPDATE BEAMLINE LAYOUT TO SHOW NEW COMPONETS LOCATIONS & MODIFIED CRYOPLANT	G SMITH	09-OCT-2014
		G SMITH / R RUCINSKI	17-OCT-2014

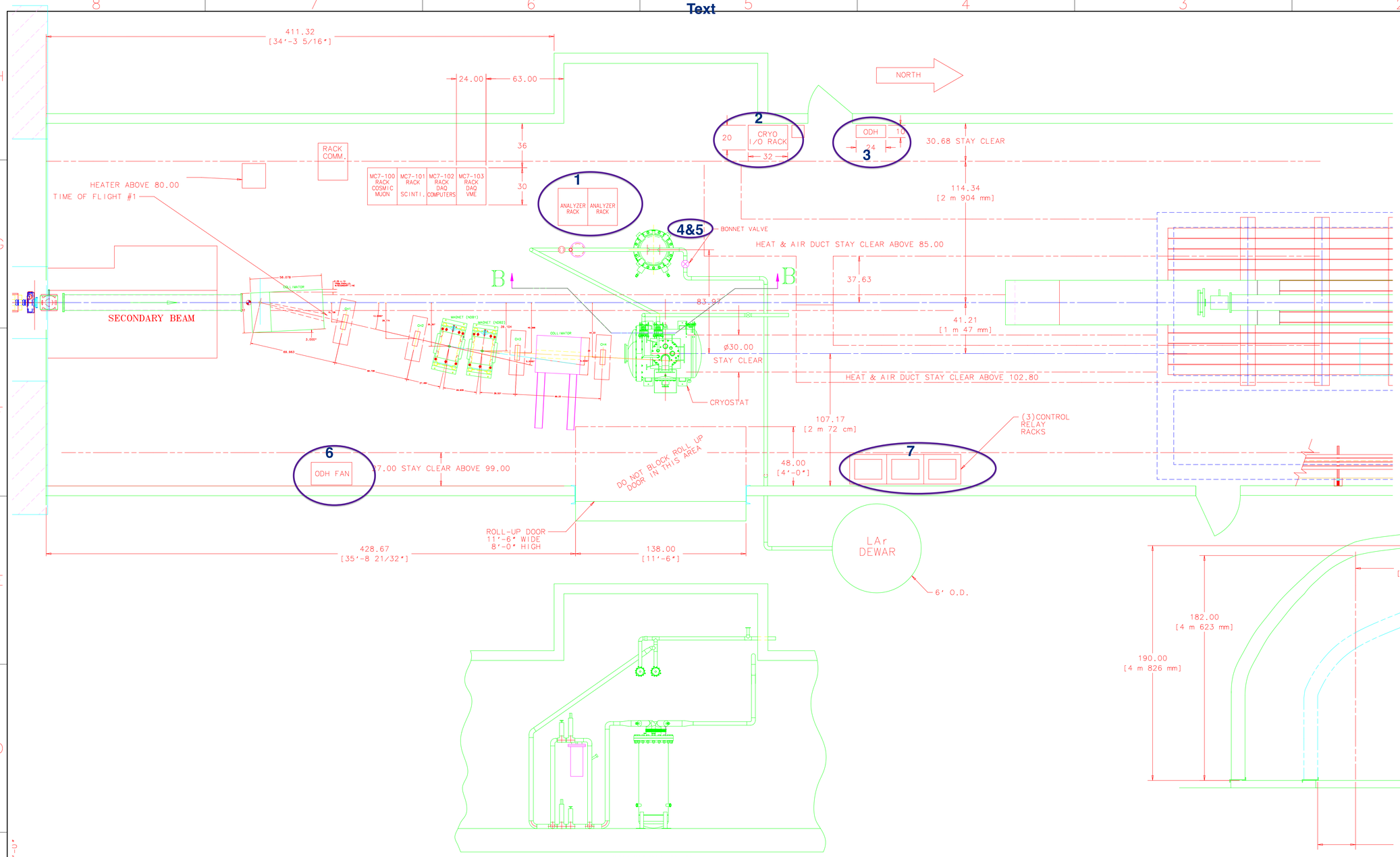

SECTION B:B
SCALE: 1/32

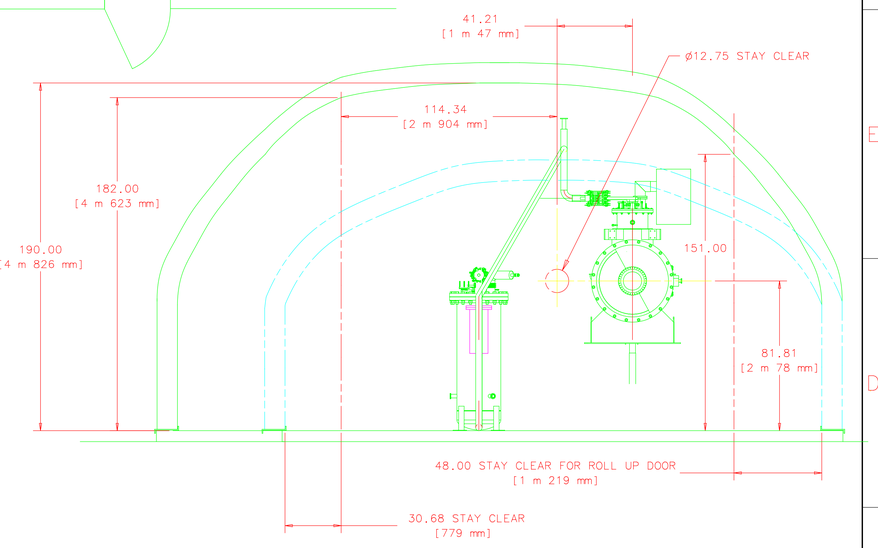

SECTION A:A
SCALE: 1/32

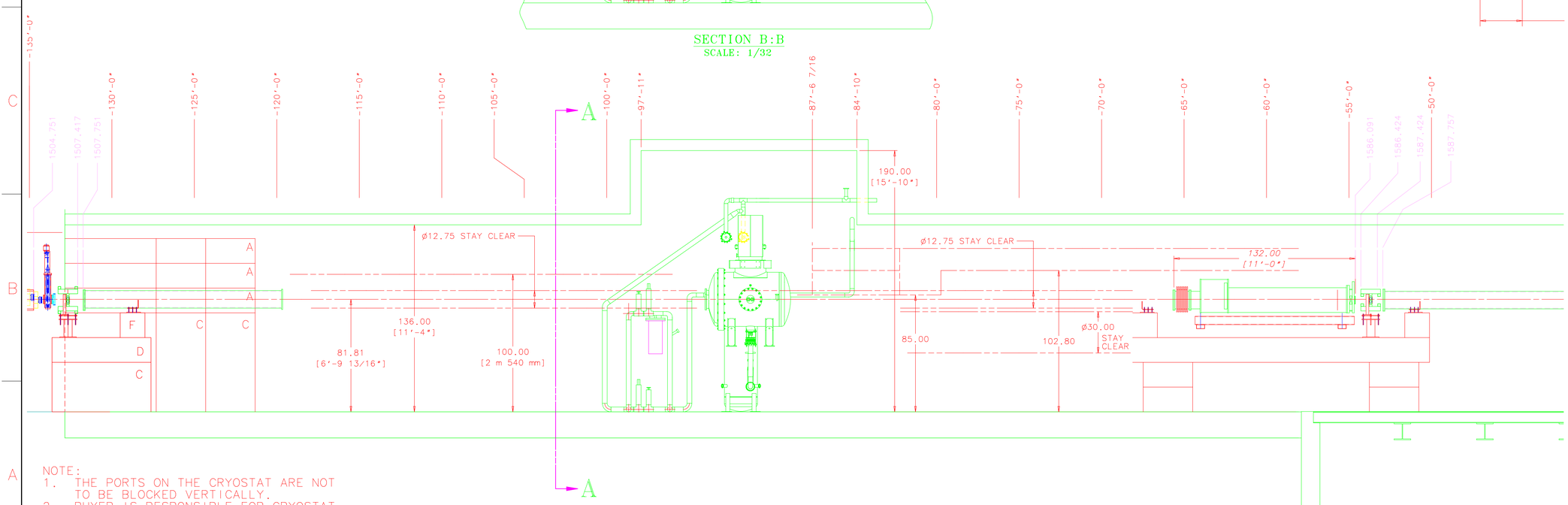

NOTE:
1. THE PORTS ON THE CRYOSTAT ARE NOT TO BE BLOCKED VERTICALLY.
2. BUYER IS RESPONSIBLE FOR CRYOSTAT STAND EXTENSION.

ITEM	PART NO.	DESCRIPTION OR SIZE	QTY.

PARTS LIST

UNLESS OTHERWISE SPECIFIED			ORIGINATOR	T.TOPE	10-APR-2013
.XX	.XXX	ANGLES	DRAWN	J.RAUCH	10-APR-2013
± ---	± ---	± ---	CHECKED	T.TOPE	02-MAY-2013
			APPROVED	R.RUCINSKI	02-MAY-2013

1. BREAK ALL SHARP EDGES .015 MAX.
2. DO NOT SCALE DRAWING.
3. DIMENSIONS BASED UPON ASME Y14.5M-1994
4. MAX. ALL MACH. SURFACES $\sqrt{32}$
5. DRAWING UNITS: U.S. INCH

USED ON

MATERIAL

FERMI NATIONAL ACCELERATOR LABORATORY
UNITED STATES DEPARTMENT OF ENERGY

PPD/MECHANICAL DEPT.
E907 M-CENTER BEAMLINE
LARIAT EQUIPMENT LAYOUT-MC7

SCALE	DRAWING NUMBER	SHEET	REV
1:32 OR NOTED	9211.520-ME-493650	1 OF 1	B

CREATED WITH : Ideas12NXSeries | GROUP: PPD/MECHANICAL DEPARTMENT