Aerogel tiles

- "n=1.11" tiles
  - refractive index: ~1.103 (a bit smaller)
  - 108 x 108 x 15.5 mm^3 x 8 tiles
  - transmission length: >20mm

aerogel ID			PPD28-1a	PPD28-1b	PPD28-2a	PPD28-2b	PPD28-3a	PPD28-3b	PPD29-1b	PPD29-3b
pin-container type			type-gm/pt20	type-gm/pt20	type-gm/pt20	type-gm/pt20	type-gm/pt20	type-gm/pt20	type-gm/pt20	type-gm/pt20
refractiev index @405nm (absolute)			1.1032	1.1033	1.1038	1.1025	1.1010	1.1067	1.1031	1.1035
refractive index @405nm (in air)			1.1029	1.1029	1.1035	1.1022	1.1007	1.1063	1.1027	1.1032
transmission length @400nm		[mm]	20.2	22.0	21.5	22.3	22.5	22.8	22.2	23.5
size (average)	dimension	[mm]	108.0	107.8	107.6	107.7	108.1	106.6	107.9	107.3
	thickness		15.6	15.4	15.5	15.1	15.5	15.6	15.4	15.3
	volume	[cm^3]	182	179	180	175	181	177	179	176

data sheet (n=1.057)

take size: 2014/9/22
optical measurement: 2014/9/16

PDR19 (re-measurement)
5 years after production

left-handed (LAD-C) notation

ID label			PDR19-3a	PDR19-3b
ref. index @405nm (absolute)			1.0565	1.0570
transL @400nm		[mm]	32.9	32.7
size	dimension	[mm]	94.0	93.9
	thickness		20.7	20.9
	volume	[cm^3]	182.8	184.0
density		[g/cm^3]	0.204	0.203
k @405nm		[cm^3/g]	0.277	0.280
total error of ref. index			0.0008	0.0006
error	ref. index @405nm		0.0001	0.0002
resolution of measurement			0.0008	0.0006
	transL	[mm]	0.5	0.5
	volume	[cm^3]	2.3	2.3
	density	[g/cm^3]	0.003	0.003
	spot radius @405nm ±1mm	[mm]	3	2

gel-screen interval		[mm]	1823	1823
spot shift (right) @405nm	corner α	[mm]	211.5	215.0
	corner β		212.0	213.0
	corner γ		212.5	214.5
	corner δ		212.0	213.5
transT @400nm		[%T]	53.3	52.8
thickness ±0.25mm	a	[mm]	20.50	21.00
	b		20.50	21.00
	c		20.75	20.75
	d		21.00	20.75
demension (detail) ±0.25mm	A	[mm]	94.00	94.00
	B		94.00	94.00
	C		94.00	93.75
	D		94.00	93.75
bend ±0.25mm	corner α	[mm]	0	0
	corner β		0	0
	corner γ		0	0
	corner δ		0	0
curvature			0.0000	0.0000
weight		[g]	37.22	37.42
crack			free	free
comment			tiny crack at corner	tiny crack at corner
long.shrink.ratio (□96.25mm)			0.977	0.975

A complete range of assemblies is available for PHOTONIS PMTs:

- compact voltage dividers (VD family),
- voltage divider and shield assemblies for very fast tubes (S563 family),
- customised voltage dividers supplied attached to the tubes and well adapted to large quantities (XA family),
- photon sensing (XS family) or photon counting (XD family) integrated modules including power supply (±12V) and more.

Though those products fulfill most user's requirements, PHOTONIS also designs customised products.

Please contact your local PHOTONIS representative.

Voltage dividers

Dimensions (in mm)

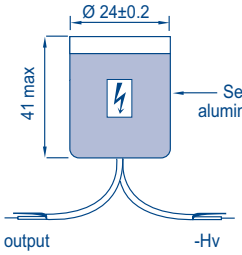

VD101T/A
VD1A1T/A

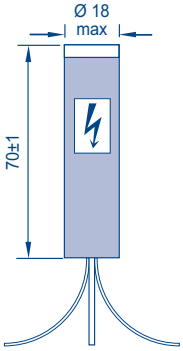

VD108, VD1A8, VD308

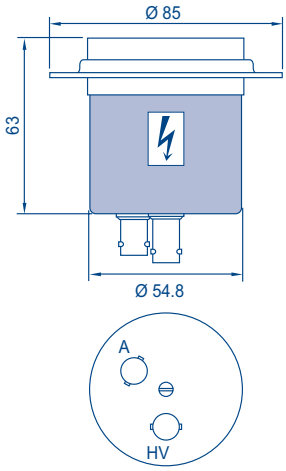

VD105K, VD105K/02, VD122K, VD162K, VD182K, VD183K, VD305K.

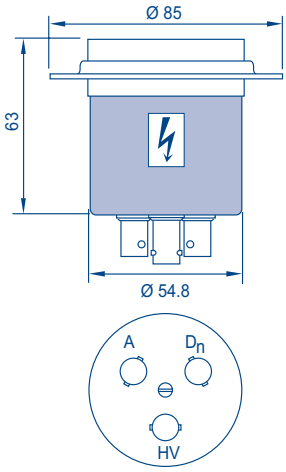

VD105K/01, VD123K, VD124K, VD124K/T, VD127K/T, VD127K

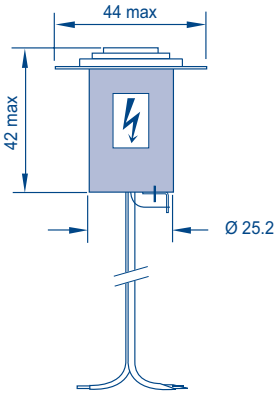

VD109, VD109/T, VD189, VD1A9, VD1B9 (no flange)

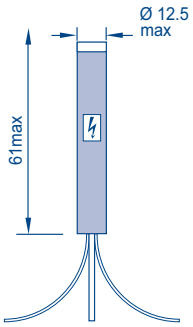

VD307/A

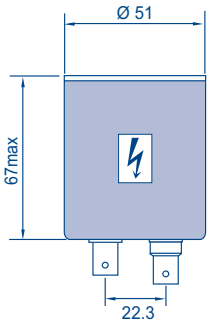

VD233501, VD233502

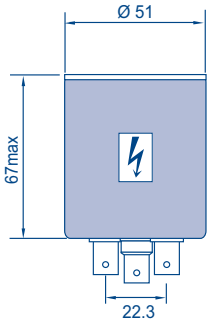

VD233511

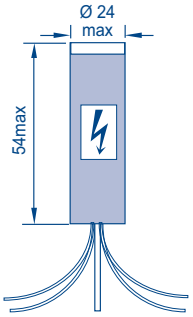

VD314

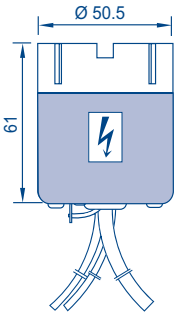

VD200K

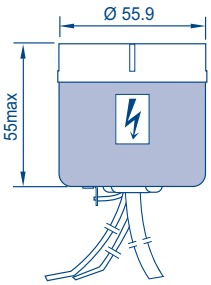

VD202K, VD202K/01,

Characteristics

voltage divider	divider type [1]	total resistance (MΩ)	I_a linearity limit [2] (µA)	max. supply voltage (V)	dissipation [3] (W)	main PMT types	supply [4]	output signal
for 13 mm tubes								
VD197/A	A		work in progress			XP6500, XP650F	-HV	DC/pulse
VD307/A	A	3.6	18	1 300	0.5	XP1302, XP1303, XP1308	+HV	pulse
for 19 mm tubes								
VD108	B	5.9	13	1 800	0.5	XP1911, XP1911/UV, XP1912, XP1918, XP1981	-HV	DC/pulse
VD108/A	A	4.2	18	1 800	0.8	XP1911, XP1911/UV, XP1912, XP1918, XP1981	-HV	DC/pulse
VD1A8	A	4	10	1 700	0.7	XP2802, XP2812, XP2822, XP2832, XP2882	-HV	DC/pulse
VD308	A	4.2	18	1 800	0.8	XP1911, XP1911/UV, XP1912, XP1918, XP1981	+HV	pulse
VD308/B	B	5.6	14	1 800	0.6	XP1911, XP1911/UV, XP1912, XP1918, XP1981	+HV	pulse
for 25 mm tubes								
VD101T/A	A	3.8	50	1 800	0.9	XP3100, XP3108, XP3132	-HV	DC/pulse
VD1A1T/A	A	3.9	50	1 600	0.7	XP31S2	-HV	DC/pulse
VD314	A	-	-	1 700	0.4	XP1422	+HV	pulse
for 29 mm tubes								
VD109	B	5.9	13	1 800	0.6	XP2900, XP2901, XP2972, XP2978	-HV	DC/pulse
VD109/T [6]	A	2.5	300	1 500	0.9	XP2900, XP2901, XP2972, XP2978	-HV	DC/pulse
VD189	B	5.5	13	1 800	0.6	XP2960	-HV	DC/pulse
VD1A9	A	3.9	10	1 600	0.7	XP2920, XP2930, XP2940, XP2950	-HV	DC/pulse
VD1B9	A	3	25	1 800	1.1	XP2970	-HV	DC/pulse
VD2345	-	-	-	-	-	XP83120, XP83121		
for 39 mm tubes								
VD100T/A [6]	A	work in progress				XP20A2	-HV	DC/pulse
VD200K	A	3.6	21	1 800	0.9	XP2012B, XP2013B, XP2015B, XP2017B, XP2018B, XP2042B, XP2060B, XP2072B, XP2090B	-HV (or +HV)	DC/pulse (pulse)
VD200K/B	B	5.5	13	1 800	0.6	XP2012B, XP2013B, XP2015B, XP2017B, XP2018B, XP2042B, XP2060B, XP2072B, XP2090B	-HV (or +HV)	DC/pulse (pulse)
for 51, 60, 76, 90 and 130 mm tubes (standard)								
VD202K	A	3.6	21	1 800	0.9	XP2202B, XP2203B, XP3230B, XP3232B, XP3330B, XP3332B, XP6242B, XP6342B	-HV (or +HV)	DC/pulse (pulse)
VD202K/01	A	4.2	15	1 500	0.6	XP3392B, XP3540B, XP3712B, XP3730B, XP3732B, XP5200B, XP5202B, XP5292B, XP5300B, XP5302B, XP5382B, XP5612B, XP5700B, XP6242B, XP6342B	-HV (or +HV)	DC/pulse (pulse)
VD202K/03	A	3.8	15	1 500	0.6	XP52Y2B, XP53Y2B	-HV (or +HV)	DC/pulse (pulse)
VD282K	A	3.3	20	1 500	0.7	XP3212B, XP3292B, XP3312B, XP3372B, XP3392B, XP3612B, XP3672B	-HV (or +HV)	DC/pulse (pulse)
for 51, 60, 76 and 130 mm tubes (fast and very fast)								
S563	C	1.8	56	3 000	5.0	XP2020, XP2020Q, XP2254B, XP2262B, XP2272B	-HV	DC/pulse
S563/04	C	1.9	53	3 000	4.7	XP2020UR, XP2020URQ	-HV	DC/pulse
VD105K [5]	C	2.8	40	2 700	2.6	XP4500B, XP4508B, XP4512B, XP4572B	-HV	DC/pulse
VD105K/01 [5] [6]	C	2.8	250	2 700	2.7	XP4500B, XP4508B, XP4512B, XP4572B	-HV	DC/pulse
VD105K/02 [5]	C	2.6	40	2 300	2.1	XP4592B	-HV	DC/pulse
VD122K [5]	B	2.2	53	2 500	2.8	XP2260B, XP2262B, XP2272B	-HV	DC/pulse
VD123K [5] [6]	C	3	300	3 000	3.1	XP4312B, XP4318B, XP4362B, XP4372B, XP4392B	-HV	DC/pulse
VD124K [5]	C	2.2	58	3 000	4.0	XP2020, XP2020Q, XP2254B	-HV	DC/pulse
VD124K/T/ [6]	C	2.2	400	3 000	4.0	XP2020, XP2020Q, XP2254B	-HV	DC/pulse
VD127K/T [6]	C	2.8	400	3 000	3.2	XP2020UR, XP2020URQ	-HV	DC/pulse
VD162K/B	B	1.5	70	2 200	3.2	XP2242B	-HV	DC/pulse
VD182K/C [6]	C	1.9	300	2 500	3.4	XP2282B	-HV	DC/pulse
VD183K	C	4	23	2 000	1.0	XP3462B, XP3468B	-HV	DC/pulse
VD233501	A	9.2	-	2500		XP8850, XP8852	-HV	DC/pulse
VD233502	A	9.2	-	2500	-	XP8850, XP8852	+HV	pulse
VD233511	A	9.2	-	2500		XP8850, XP8852	-HV	DC/pulse
VD305K/B [5]	C	2.8	40	2 700	2.6	XP4500B, XP4508B, XP4512B, XP4572B	+HV	pulse

Notes

[1] A: iterative voltage divider which maximizes gain;

B: progressive voltage divider which optimizes linearity and in most cases the timing characteristics;

C: progressive voltage divider for certain fast tubes which provides a good compromise between A-type and B-type dividers for gain, linearity and timing characteristics.

[2] The mentioned current is the anode current above which the linearity of the PMT is affected by more than 4%, due to the limitation of the divider circuitry; the PMT has however its own linearity, which is not included in this number; see Linearity and Voltage Dividers for more details.

[3] at max. supply voltage.

[4] -HV: cathode at -HV; anode grounded;
+HV: anode at +HV, cathode grounded.

The VD200K, VD202K, and VD282K families are suitable for both +HV and -HV. They are supplied set for -HV operation. For +HV operation, remove the cap and modify the internal connections according to the instructions supplied with the base.

[5] possible voltage adjustments with internal trimmer:

VD105K: G1 and G2 voltages;
VD105K/01: G1 voltage;
VD105K/02: G1 voltage;
VD122K: D2 voltage;
VD123K: G voltage;
VD124K: G1 and D2 voltages;
VD305K/B: G1 and G2 voltages;

[6] The last 3 stages are transistorized, stabilizing the dynode voltages to within 1 V at up to 100 µA and above.

Voltage divider and shield for very fast tubes

Special assemblies including a voltage divider and an optional mu-metal shield are available for 2" fast PMTs used to detect very brief low-intensity light pulses in physics experiments using coincidence measurements, Cherenkov light studies, high-speed scintillators, and in single photoelectron counting.

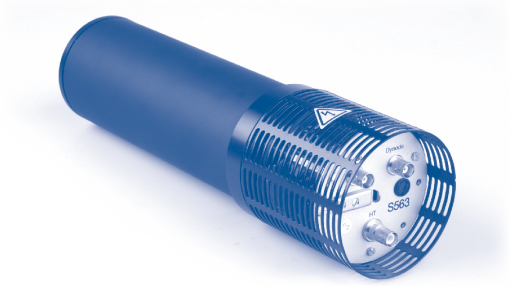

	Voltage divider	+ Front shield	=	Voltage divider & Front shield assembly
Fast tubes	S563	+ S5632/AV	=	S5632
Ultra fast tubes	S563/04			S5632/04
Length (mm)	108	240		334
Diameter (mm)	90	80		90
Mass (g)	490	4000		4490

See voltage dividers characteristics (p.74).

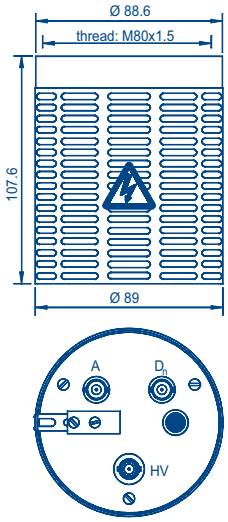

S563, S563A, S563/04

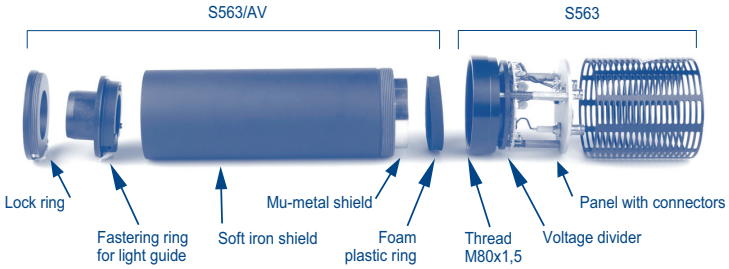

Photomultiplier Tube Assemblies

TACCF0133

Photomultiplier Tube Assemblies

Photomultiplier tube assemblies are made up of a photomultiplier tube, a voltage-divider circuit and other components, all integrated into a single case.

Type No.	Assembly Dia. (mm)	PMT Dia. mm (inch)	Built-in PMT	Curve Code	Wavelength (nm)	Out-line No.	Ⓕ Dynode Structure / Stages	Max. Rating: Anode to Cathode Voltage Max. (V)	Max. Rating: Divider Current Max. (mA)	Anode to Cathode Supply Voltage (V)	Cathode Sensitivity: Luminous Typ. (μA/lm)	Cathode Sensitivity: Blue Sensitivity Index (CS 5-58) Typ.
H3164-10	φ10.5	10 (3/8)	R1635	400K	300 to 650	1	L/8	-1500	0.41	-1250	100	10.0
H3695-10	φ11.3	10 (3/8)	R2496	400S	160 to 650	2	L/8	-1500	0.37	-1250	100	10.0
H3165-10	φ14.3	13 (1/2)	R647-01	400K	300 to 650	3	L/10	-1250	0.34	-1000	110	10.0
H6520	φ23.5	19 (3/4)	R1166	400K	300 to 650	4	L/10	-1250	0.33	-1000	110	10.5
H6524	φ23.5	19 (3/4)	R1450	400K	300 to 650	5	L/10	-1800	0.43	-1500	115	11.0
H6612	φ23.5	19 (3/4)	R3478	400K	300 to 650	6	L/8	-1800	0.35	-1700	115	11.0
H6152-70	φ31.0	25 (1)	R5505-70	—	300 to 650	7	FM/15	+2300	0.41	+2000	80	9.5
H6533	φ31.0	25 (1)	R4998	400K	300 to 650	8	L/10	-2500	0.36	-2250	70	9.0
H7415	φ33.0	28 (1-1/8)	R6427	400K	300 to 650	9	L/10	-2000	0.41	-1500	95	11.0
H3178-51	φ47.0	38 (1-1/2)	R580	400K	300 to 650	10	L/10	-1750	0.63	-1500	95	11.0
H8409-70	φ45.0	38 (1-1/2)	R7761-70	—	300 to 650	11	FM/19	+2300	0.33	+2000	80	9.5
H1949-51	φ60.0	51 (2)	R1828-01	400K	300 to 650	12	L/12	-3000	0.70	-2500	90	10.5
H6410	φ60.0	51 (2)	R329-02	400K	300 to 650	13	L/12	-2700	0.67	-2000	90	10.5
H7195	φ60.0	51 (2)	R329-02	400K	300 to 650	14	L/12	-2700	1.23	-2000	90	10.5
H2431-50	φ60.0	51 (2)	R2083	400K	300 to 650	15	L/8	-3500	0.61	-3000	80	10.0
H6614-70	φ60.0	51 (2)	R5924-70	—	300 to 650	16	FM/19	+2300	0.33	+2000	70	9.0
H6559	φ83.0	76 (3)	R6091	400K	300 to 650	17	L/12	-2500	0.62	-2000	90	10.5
H6527	φ142.0	127 (5)	R1250	400K	300 to 650	18	L/14	-3000	1.02	-2000	70	9.0
H6528	φ142.0	127 (5)	R1584	400U	185 to 650	18	L/14	-3000	1.02	-2000	70	9.0
H9530-20	▭ 35 × 16	—	—	—	300 to 920	19	MC/12	-1200	0.42	-1000	500	—
H8711	□30	—	R7600-00-M16	—	300 to 650	20	MC/12	-1000	0.35	-800	80	9.5
H8711-20	□30	—	R7600-20-M16	—	300 to 920	20	MC/12	-1000	0.35	-800	500	—
H7546B	□30	—	R7600-00-M64	—	300 to 650	21	MC/12	-1000	0.45	-800	80	9.5
H7546B-20	□30	—	R7600-20-M64	—	300 to 920	21	MC/12	-1000	0.45	-800	500	—
H7260-20	▭ 52 × 24	—	R7259-20	—	300 to 920	22	MC/10	-900	0.37	-800	500	—
H8500C	□52	—	R10551-00-M64	—	300 to 650	23	MC/12	-1100	0.173	-1000	60	9.5
H9500	□52	—	R8400-00-M256	—	300 to 650	24	MC/12	-1100	0.18	-1000	60	9.5
H10966A	□52	—	R10552-00-M64	—	300 to 650	25	MC/8	-1100	0.245	-1000	60	9.5
H10515B-20	□30	—	R5900U-20-L16	—	300 to 920	26	MC/10	-900	0.37	-800	500	—

CAUTION: Photomultiplier tube assemblies listed in this catalog are not designed for use in a vacuum, please consult our sales office.
When using them in a vacuum or under low pressure conditions, please consult us.

Anode Characteristics

Luminous	Gain	Dark Current		Time Response			Pulse Linearity		Notes	Type No.
				Rise Time	Transit Time	Transit Time Spread	2 %	5 %		
Typ. (A/lm)	Typ.	Typ. (nA)	Max. (nA)	Typ. (ns)	Typ. (ns)	Typ. (ns)	Typ. (mA)	Typ. (mA)		
100	1.0×10^6	1	50	0.8	9.0	0.5	3	7	H3164-11 (with 50 Ω)	H3164-10
100	1.0×10^6	2	50	0.7	9.0	0.5	3	7	H3695-11 (with 50 Ω)	H3695-10
150	1.4×10^6	1	2	2.1	22	2.0	3	7	H3165-11 (with 50 Ω)	H3165-10
110	1.0×10^6	1	5	2.5	27	2.8	4	7	H6520-01 (with 50 Ω)	H6520
200	1.7×10^6	3	50	1.8	19	0.76	4	8	H6524-01 (with 50 Ω)	H6524
200	1.7×10^6	10	300	1.3	14	0.36	4	8	H6612-01 (with 50 Ω)	H6612
40	5.0×10^5	5	30	1.5	5.6	0.35	180	250		H6152-70
400	5.7×10^6	100	800	0.7	10	0.16	40	70	H6610 (R5320)	H6533
475	5.0×10^6	10	200	1.7	16	0.5	10	30	H7415-01 (with 50 Ω) H7416 (R7056)	H7415
75	7.9×10^5	2	15	2.7	40	4.5	150	200		H3178-51
800	1.0×10^7	15	100	2.1	7.5	0.35	350	500		H8409-70
1800	1.0×10^7	50	400	1.3	28	0.55	100	200	H3177-51 (R2059)	H1949-51
270	3.0×10^6	10	100	2.7	40	1.1	100	200	H6521 (R2256) H6522 (R5113)	H6410
270	3.0×10^6	10	100	2.7	40	1.1	80	110		H7195
200	2.5×10^6	100	800	0.7	16	0.37	100	150	H3378-50 (R3377)	H2431-50
700	1.0×10^7	30	200	2.5	9.5	0.44	500	700		H6614-70
900	1.0×10^7	30	120	2.7	40	1.5	80	110		H6559
1000	1.4×10^7	50	300	2.5	54	1.2	100	150		H6527
1000	1.4×10^7	50	300	2.5	54	1.2	100	150		H6528
1500	3.0×10^6	1/ch	10/ch	0.7	6.0	0.25	0.9/ch	1/ch	8 Linearanode	H9530-20
280	3.5×10^6	0.8/ch	4/ch	0.83	12	0.33	0.5/ch	1/ch	16 Multianode H8711-10 (Taper Divider Type)	H8711
250	5.0×10^5	0.8/ch	4/ch	0.83	12	0.33	0.5/ch	1/ch		H8711-20
24	3.0×10^5	0.2/ch	2/ch	1.0	12	0.38	0.3/ch	0.6/ch	64 Multianode	H7546B
25	5.0×10^4	0.2/ch	2/ch	1.0	12	0.38	0.3/ch	0.6/ch		H7546B-20
500	1.0×10^6	1/ch	10/ch	0.6	6.8	0.18	0.6/ch	0.8/ch	32 Linearanode H7260A-20 (-HV Cable Input Type)	H7260-20
90	1.5×10^6	0.1/ch	—	0.8	6.0	0.4	1/ch	2/ch	H8500C-03 (UV Grass Type) H8500D (HV Pin Input Type)	H8500C
90	1.5×10^6	0.05/ch	—	0.8	6.0	0.4	0.2/ch	0.5/ch	H9500-03 (UV Grass Type)	H9500
20	3.3×10^5	0.1/ch	—	0.4	4.0	—	1.2/ch	3/ch	H10966B (HV Pin Input Type)	H10966A
500	1.0×10^6	1/ch	10/ch	0.6	7.4	0.18	0.8/ch	1/ch	16 Linearanode	H10515B-20

Photomultiplier Tube Assemblies Dimensional Outlines and Diagrams (Unit: mm)

❶ H3164-10

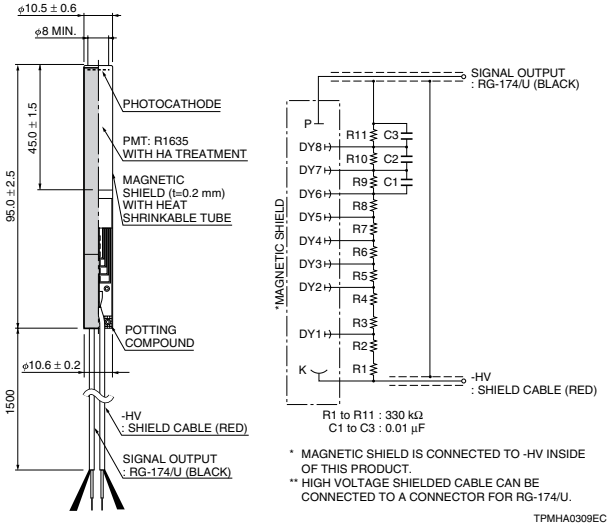

* MAGNETIC SHIELD IS CONNECTED TO -HV INSIDE OF THIS PRODUCT.
** HIGH VOLTAGE SHIELDED CABLE CAN BE CONNECTED TO A CONNECTOR FOR RG-174/U.

TPMHA0309EC

❷ H3695-10

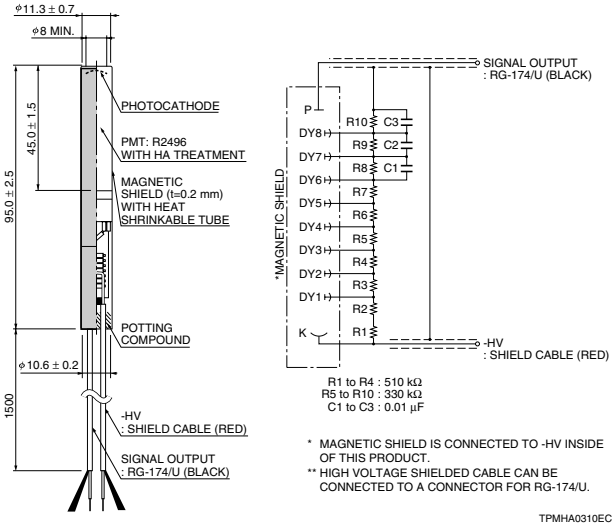

* MAGNETIC SHIELD IS CONNECTED TO -HV INSIDE OF THIS PRODUCT.
** HIGH VOLTAGE SHIELDED CABLE CAN BE CONNECTED TO A CONNECTOR FOR RG-174/U.

TPMHA0310EC

❸ H3165-10

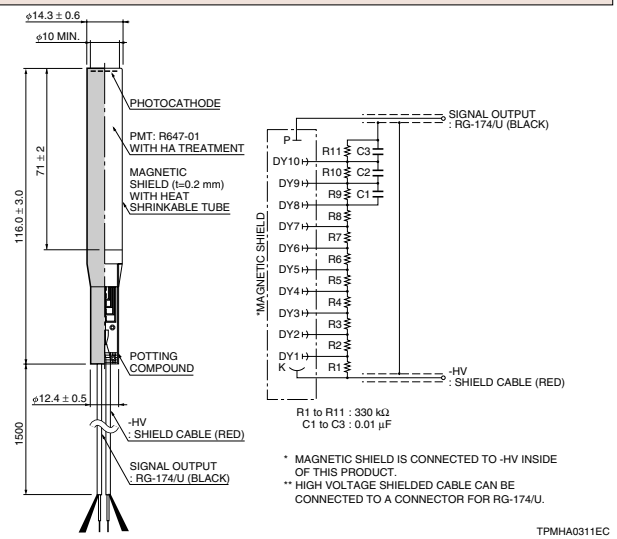

* MAGNETIC SHIELD IS CONNECTED TO -HV INSIDE OF THIS PRODUCT.
** HIGH VOLTAGE SHIELDED CABLE CAN BE CONNECTED TO A CONNECTOR FOR RG-174/U.

TPMHA0311EC

❹ H6520

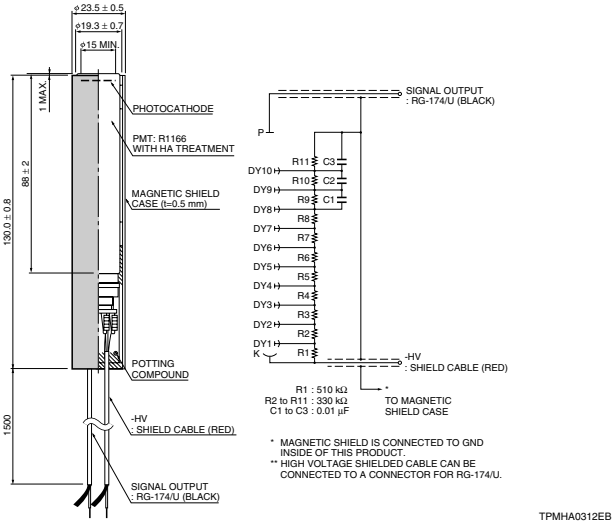

* MAGNETIC SHIELD IS CONNECTED TO GND INSIDE OF THIS PRODUCT.
** HIGH VOLTAGE SHIELDED CABLE CAN BE CONNECTED TO A CONNECTOR FOR RG-174/U.

TPMHA0312EB

❺ H6524

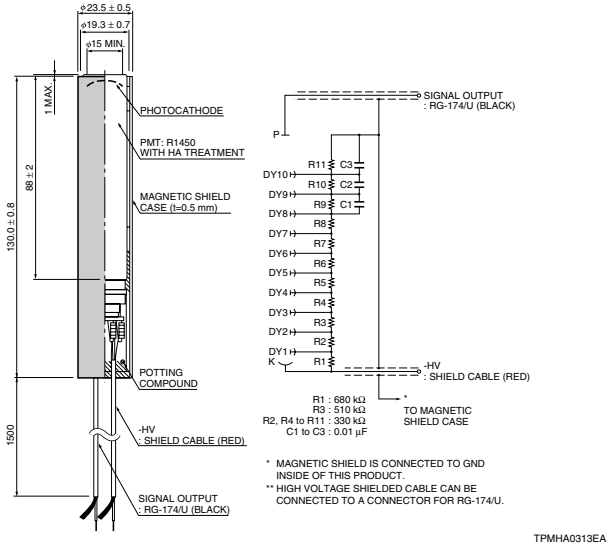

* MAGNETIC SHIELD IS CONNECTED TO GND INSIDE OF THIS PRODUCT.
** HIGH VOLTAGE SHIELDED CABLE CAN BE CONNECTED TO A CONNECTOR FOR RG-174/U.

TPMHA0313EA

❻ H6612

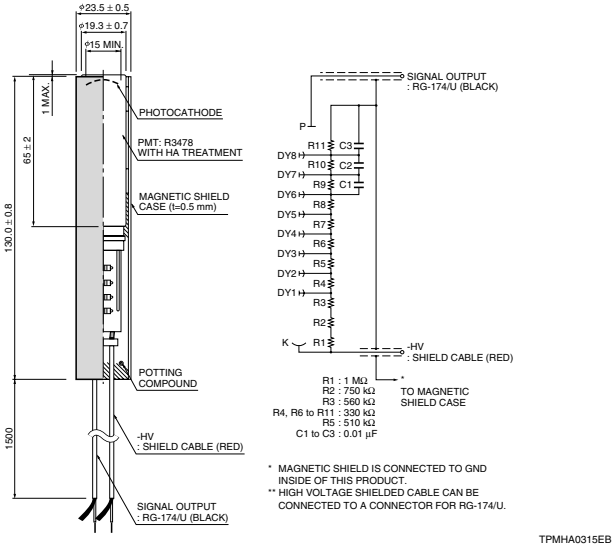

* MAGNETIC SHIELD IS CONNECTED TO GND INSIDE OF THIS PRODUCT.
** HIGH VOLTAGE SHIELDED CABLE CAN BE CONNECTED TO A CONNECTOR FOR RG-174/U.

TPMHA0315EB

⑦ H6152-70

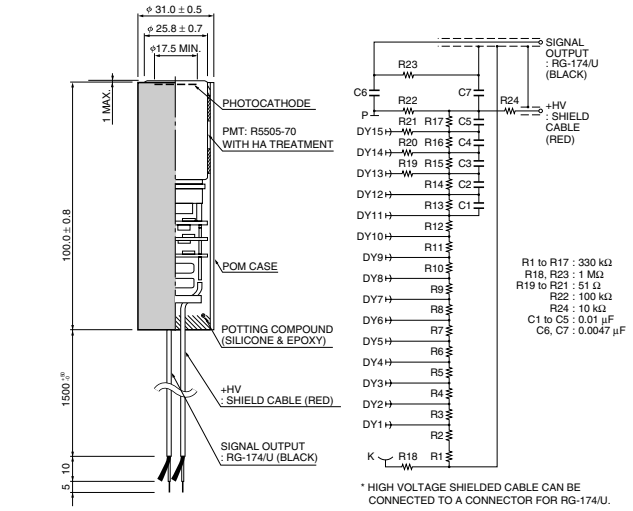

* HIGH VOLTAGE SHIELDED CABLE CAN BE CONNECTED TO A CONNECTOR FOR RG-174/U.

TPMHA0470EA

⑧ H6533

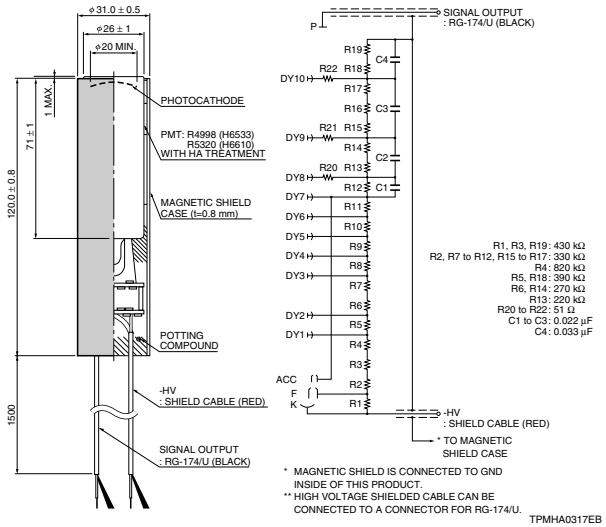

* MAGNETIC SHIELD IS CONNECTED TO GND INSIDE OF THIS PRODUCT.
** HIGH VOLTAGE SHIELDED CABLE CAN BE CONNECTED TO A CONNECTOR FOR RG-174/U.

TPMHA0317EB

⑨ H7415

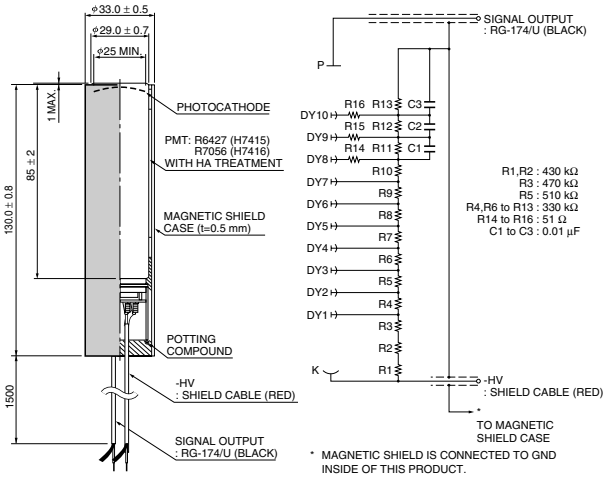

* MAGNETIC SHIELD IS CONNECTED TO GND INSIDE OF THIS PRODUCT.
** HIGH VOLTAGE SHIELDED CABLE CAN BE CONNECTED TO A CONNECTOR FOR RG-174/U.

TPMHA0318EB

⑩ H3178-51

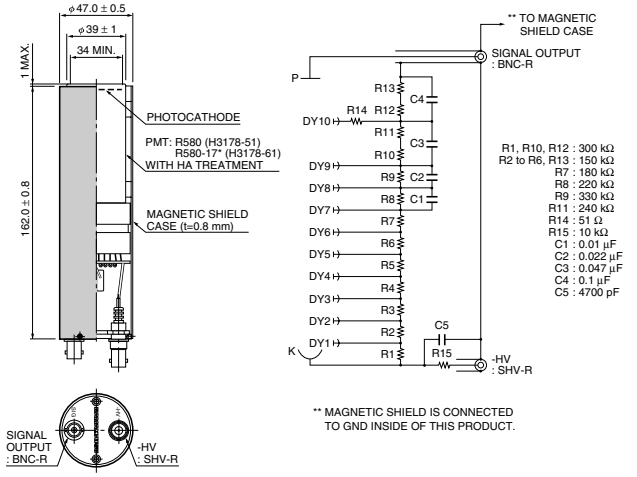

* R580-17 has a plano-concave face plate.

** MAGNETIC SHIELD IS CONNECTED TO GND INSIDE OF THIS PRODUCT.

TPMHA0320EB

⑪ H8409-70

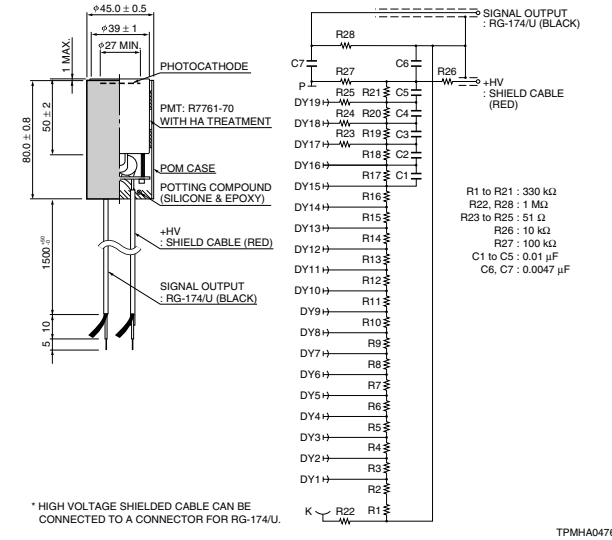

* HIGH VOLTAGE SHIELDED CABLE CAN BE CONNECTED TO A CONNECTOR FOR RG-174/U.

TPMHA0476EA

⑫ H1949-51

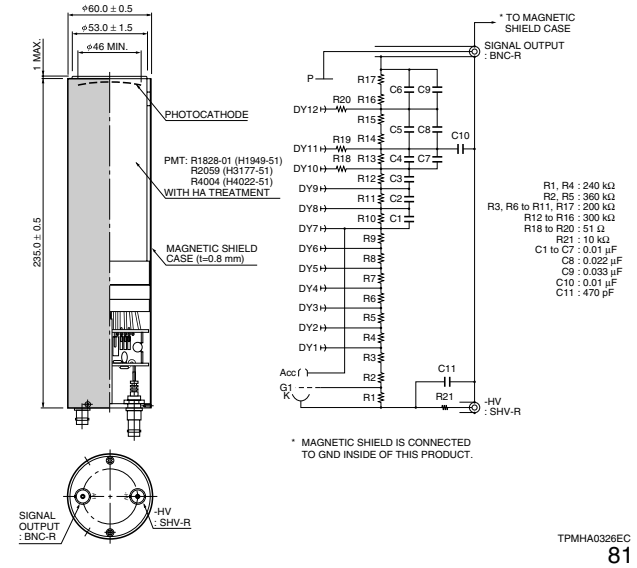

* MAGNETIC SHIELD IS CONNECTED TO GND INSIDE OF THIS PRODUCT.

TPMHA0326EC

Photomultiplier Tube Assemblies Dimensional Outlines and Diagrams (Unit: mm)

⑬ H6410

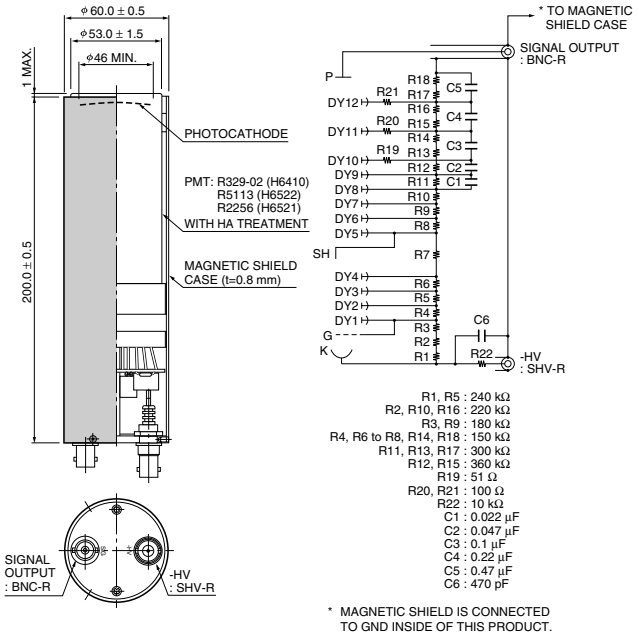

R1, R5 : 240 kΩ
R2, R10, R16 : 220 kΩ
R3, R9 : 180 kΩ
R4, R6 to R8, R14, R18 : 150 kΩ
R11, R13, R17 : 300 kΩ
R12, R15 : 360 kΩ
R19 : 51 Ω
R20, R21 : 100 Ω
R22 : 10 kΩ
C1 : 0.022 μF
C2 : 0.047 μF
C3 : 0.1 μF
C4 : 0.22 μF
C5 : 0.47 μF
C6 : 470 pF

* MAGNETIC SHIELD IS CONNECTED TO GND INSIDE OF THIS PRODUCT.

TPMHA0324EB

⑭ H7195

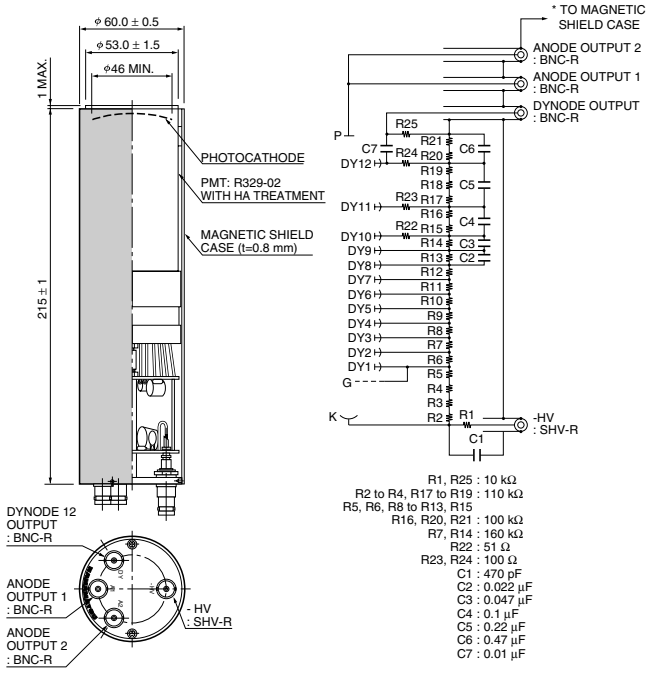

R1, R25 : 10 kΩ
R2 to R4, R17 to R19 : 110 kΩ
R5, R6, R8 to R13, R15
R16, R20, R21 : 100 kΩ
R7, R14 : 160 kΩ
R22 : 51 Ω
R23, R24 : 100 Ω
C1 : 470 pF
C2 : 0.022 μF
C3 : 0.047 μF
C4 : 0.1 μF
C5 : 0.22 μF
C6 : 0.47 μF
C7 : 0.01 μF

* MAGNETIC SHIELD IS CONNECTED TO GND INSIDE OF THIS PRODUCT.

TPMHA0323EB

⑮ H2431-50

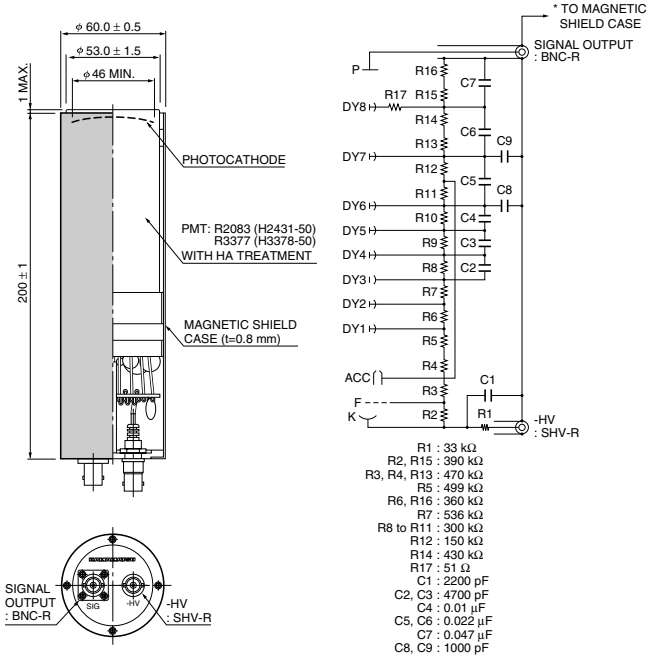

R1 : 33 kΩ
R2, R15 : 390 kΩ
R3, R4, R13 : 470 kΩ
R5 : 499 kΩ
R6, R16 : 360 kΩ
R7 : 536 kΩ
R8 to R11 : 300 kΩ
R12 : 150 kΩ
R14 : 430 kΩ
R17 : 51 Ω
C1 : 2200 pF
C2, C3 : 4700 pF
C4 : 0.01 μF
C5, C6 : 0.022 μF
C7 : 0.047 μF
C8, C9 : 1000 pF

* MAGNETIC SHIELD IS CONNECTED TO GND INSIDE OF THIS PRODUCT.

TPMHA0327EB

⑯ H6614-70

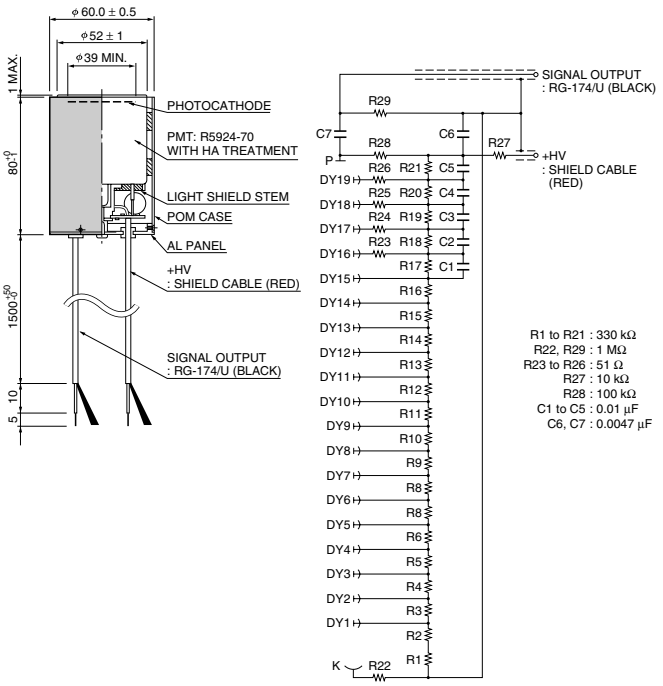

R1 to R21 : 330 kΩ
R22, R29 : 1 MΩ
R23 to R26 : 51 Ω
R27 : 10 kΩ
R28 : 100 kΩ
C1 to C5 : 0.01 μF
C6, C7 : 0.0047 μF

* HIGH VOLTAGE SHIELDED CABLE CAN BE CONNECTED TO A CONNECTOR FOR RG-174/U.

TPMHA0472EA

⑰ H6559

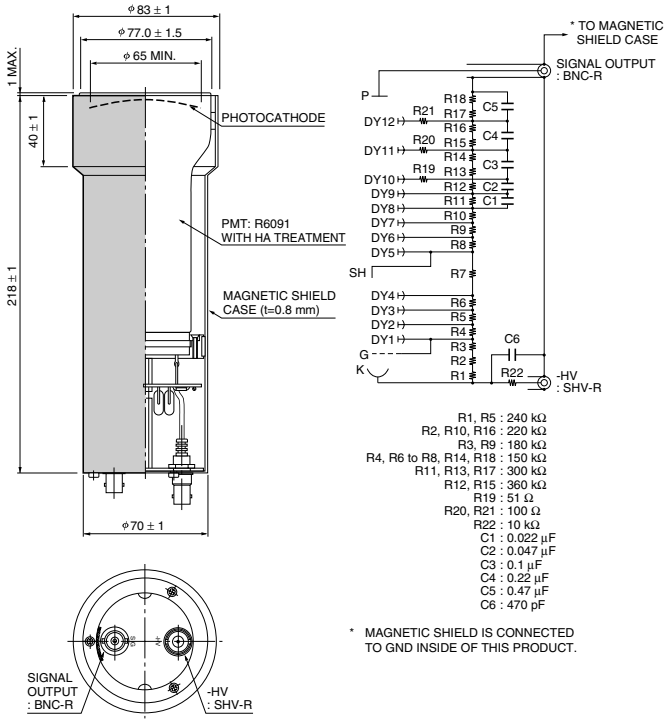

R1, R5 : 240 kΩ
R2, R10, R16 : 220 kΩ
R3, R9 : 180 kΩ
R4, R6 to R8, R14, R18 : 150 kΩ
R11, R13, R17 : 300 kΩ
R12, R15 : 360 kΩ
R19 : 51 Ω
R20, R21 : 100 Ω
R22 : 10 kΩ
C1 : 0.022 μF
C2 : 0.047 μF
C3 : 0.1 μF
C4 : 0.22 μF
C5 : 0.47 μF
C6 : 470 pF

* MAGNETIC SHIELD IS CONNECTED TO GND INSIDE OF THIS PRODUCT.

TPMHA0331EA

⑱ H6527, H6528

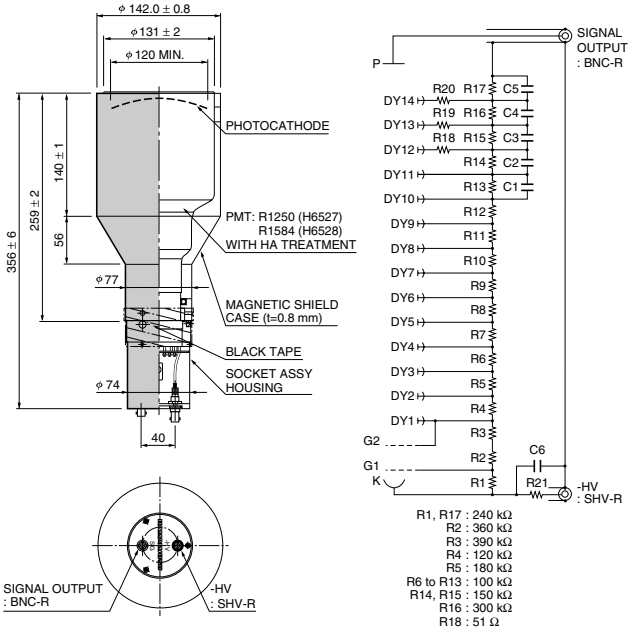

H6527=Flat window, Borosilicate
H6528=Curved window, UV glass

R1, R17 : 240 kΩ
R2 : 360 kΩ
R3 : 390 kΩ
R4 : 120 kΩ
R5 : 180 kΩ
R6 to R13 : 100 kΩ
R14, R15 : 150 kΩ
R16 : 300 kΩ
R18 : 51 Ω
R19, R20 : 100 Ω
R21 : 10 kΩ
C1 : 0.022 μF
C2 : 0.047 μF
C3 : 0.1 μF
C4 : 0.22 μF
C5 : 0.47 μF
C6 : 470 pF

TPMHA0332EA

⑲ H9530-20

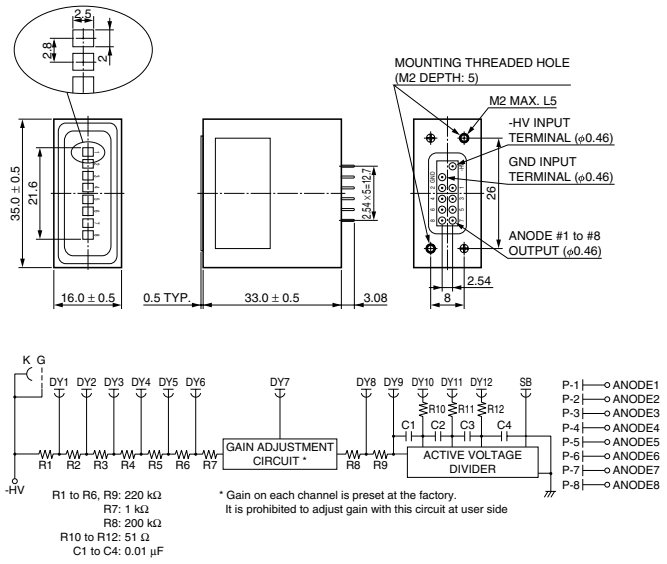

R1 to R6, R9: 220 kΩ
R7: 1 kΩ
R8: 200 kΩ
R10 to R12: 51 Ω
C1 to C4: 0.01 μF

* Gain on each channel is preset at the factory.
It is prohibited to adjust gain with this circuit at user side

TPMHA0508EC

⑳ H8711, H8711-20, H8711-100, H8711-200

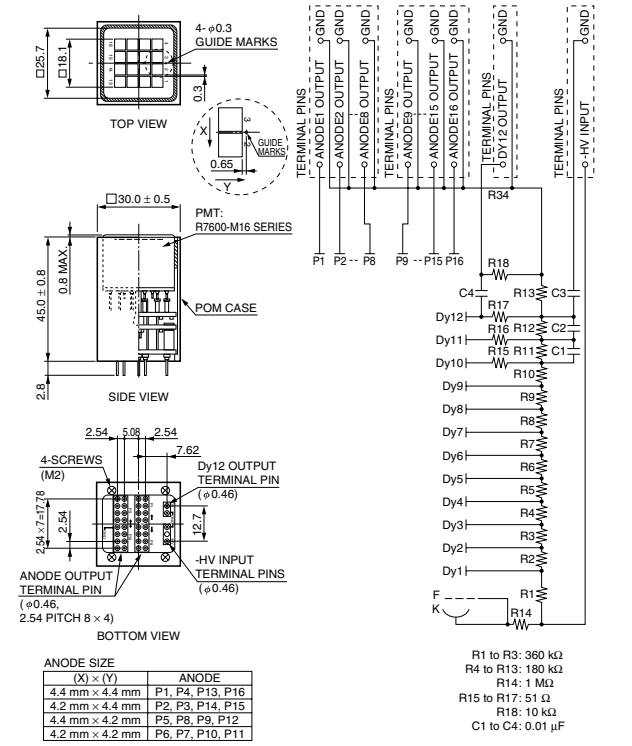

ANODE SIZE

(X) × (Y)	ANODE
4.4 mm × 4.4 mm	P1, P4, P13, P16
4.2 mm × 4.4 mm	P2, P3, P14, P15
4.4 mm × 4.2 mm	P5, P8, P9, P12
4.2 mm × 4.2 mm	P6, P7, P10, P11

R1 to R3: 360 kΩ
R4 to R13: 180 kΩ
R14: 1 MΩ
R15 to R17: 51 Ω
R18: 10 kΩ
C1 to C4: 0.01 μF

TPMHA0487ED

Photomultiplier Tube Assemblies Dimensional Outlines and Diagrams (Unit: mm)

21 H7546B, H7546B-20, H7546B-100, H7546B-200

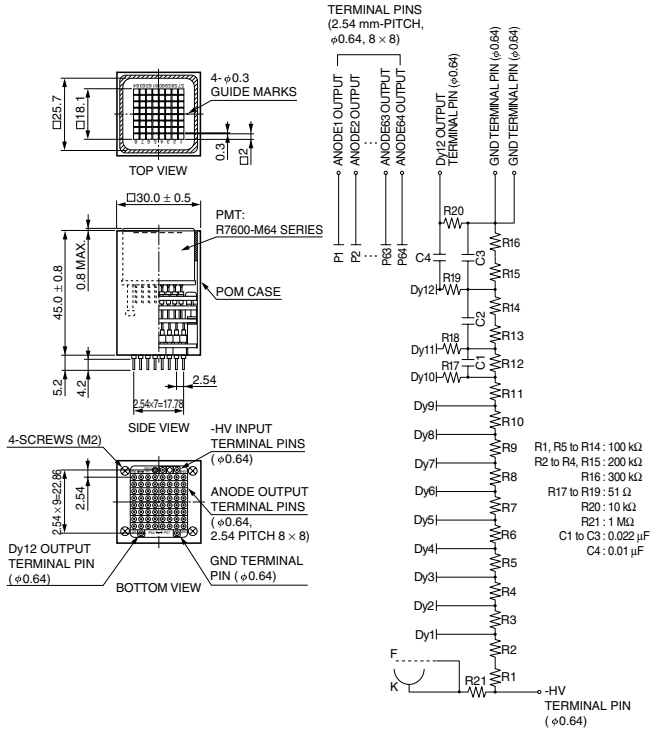

TPMHA0488EC

22 H7260-20, H7260-100, H7260-200

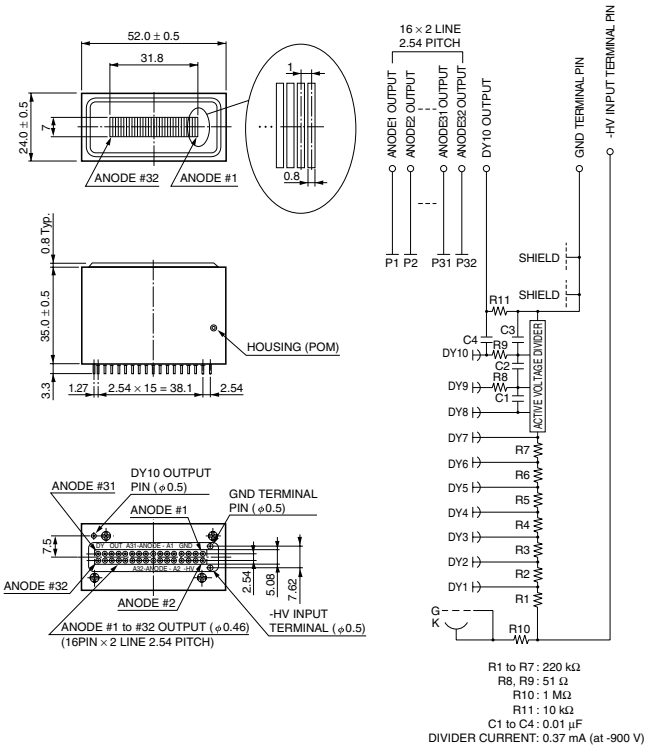

TPMHA0455EC TPMHA0192EA

23 H8500C

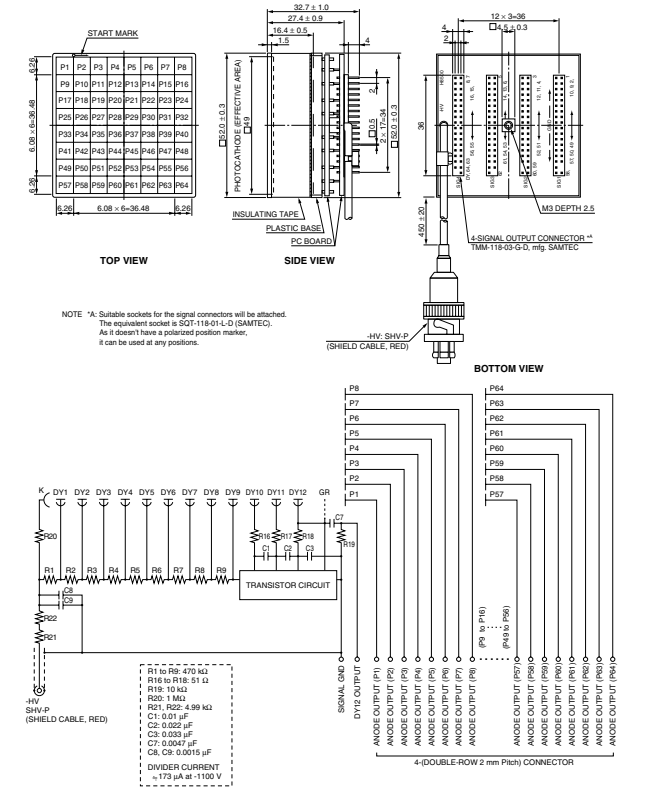

TPMHA0544EA

24 H9500

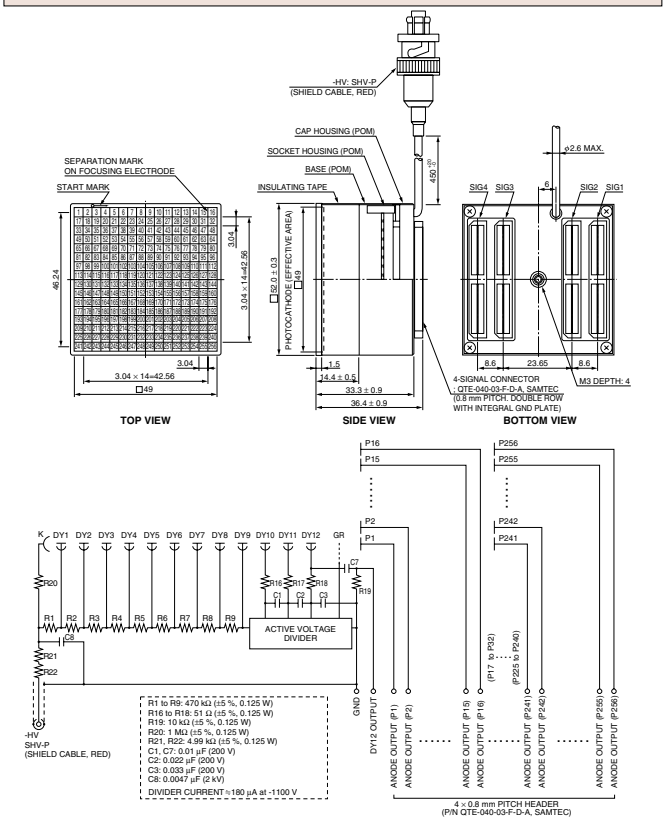

TPMHA0504EB

㉕ H10966A

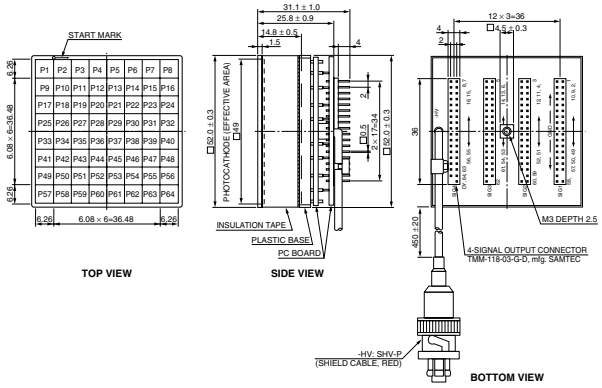

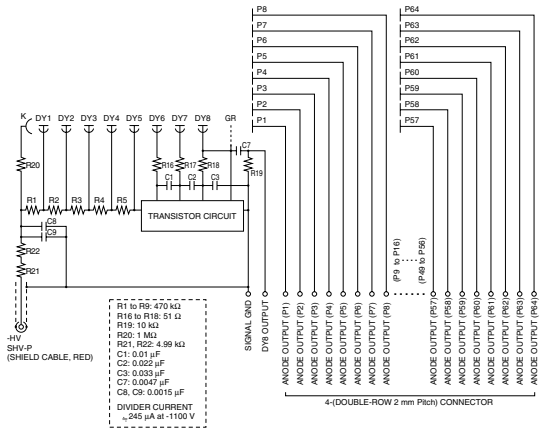

TPMHA0559EA

㉖ H10515B-20

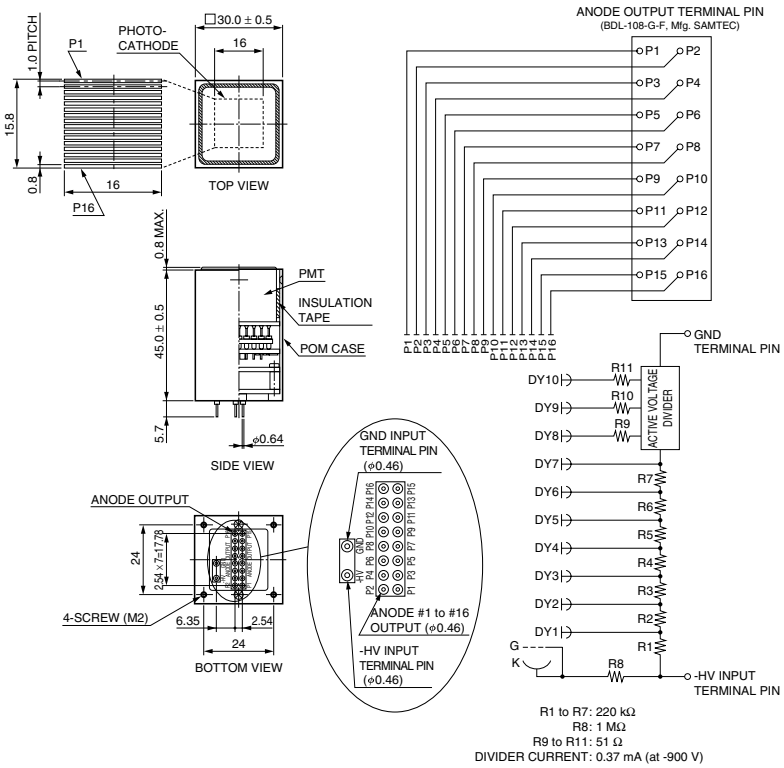

TPMHA0534JA

Specification for H1161 (same as H7195)

- Specifications for H1161
  - Diameter (including mu-metal); 60mm
  - 2” PMT
  - Type R329-02 of PMT (except for base part) is used.
  - Sensitive wavelength; 300-650nm
  - # of dinodes; 12
  - Max HV; -2700, Max current; 1.23mA
  - Typical HV; -2000V, typical gain; 3.0×10^6
  - Drawings are available on top-right of 5p of

http://www.hamamatsu.com/resources/pdf/etd/PMT_78-85.pdf

One caveat

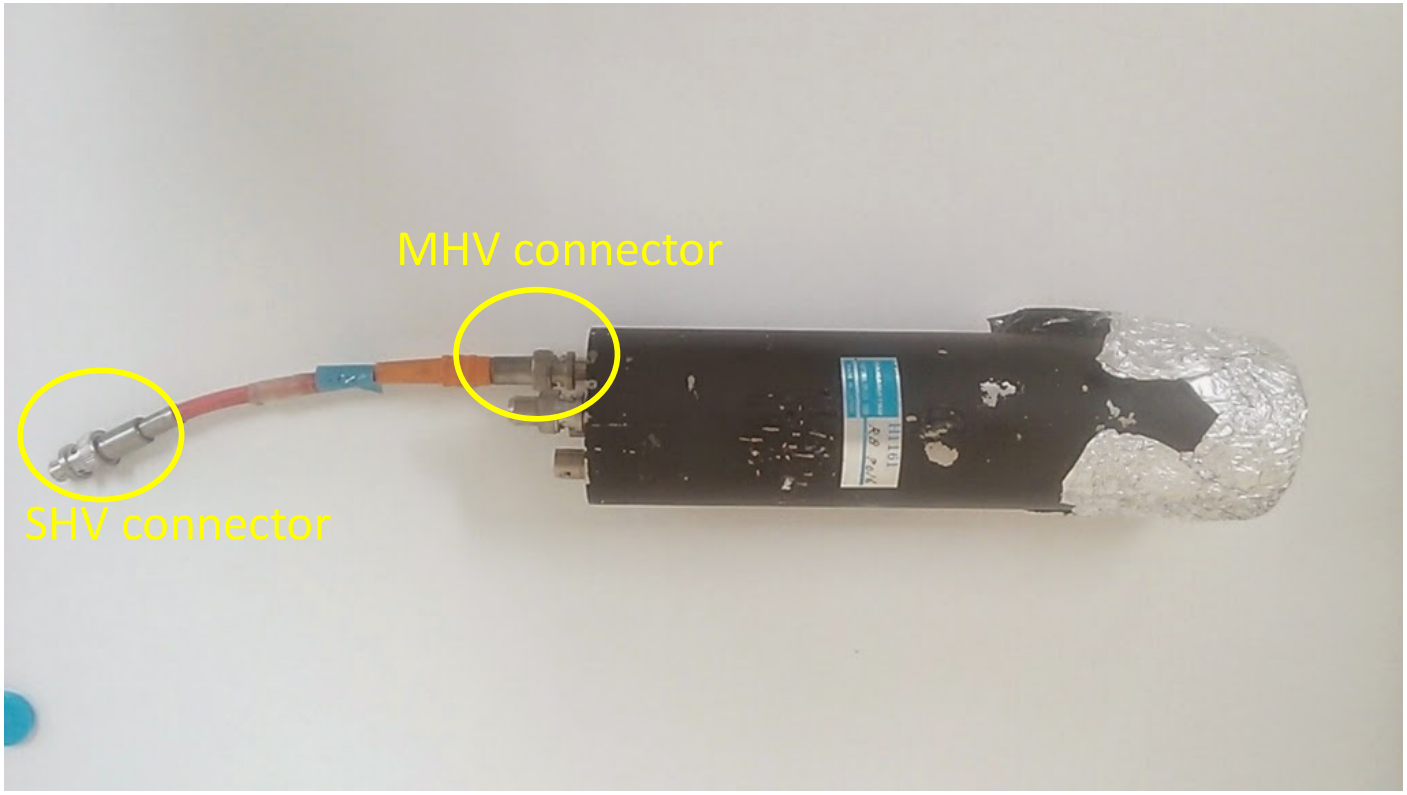

- Our PMTs are 20 years old. Connectors for HV are MHV specification.
- So we convert MHV connector to SHV connector as close as possible to the PMT as shown in the picture.
- We don't think this is the issue, but if any of safety issues exist, let us know as soon as possible.
- Of course, other performance such as gain or dark rate or anthing are fine to use for aerogel counters. (already measured.) Don't worry for the part.

Photomultiplier XP3392

8-stage
76mm (3"), square tube

Application
✓ Gamma-cameras

Feature
✓ High Energy Resolution

Description	
Window material	Lime glass
Photocathode	Bi-alkali
Refr. Index at 420nm	1.54
Multiplier structure	Linear focused

Photocathode characteristics	Min	Typ	Max	Unit
Spectral range :		290-650		nm
Maximum sensitivity at :		420		nm
Sensitivity :				
Luminous :		100		µA/lm
Blue * :	11	13		µA/lmf
Radiant, at 420nm		100		mA/W
Characteristics with voltage divider A	**Min**	**Typ**	**Max**	**Unit**
Gain slope (vs supp. Volt., log/log)		5.8		
For an anode blue sensitivity of		3		A/lmf
Supply voltage *	800	1000	1200	V
Gain		2.3×10^5		
Anode dark current *		1	20	
Pulse height resolution ^{57}Co – NaI(Tl) 3"X3"		8.5	9	%
Pulse height resolution ^{137}Cs		7		%
Mean anode sensitivity deviation :				
Long term (16h) :		1		%
After change of count rate :		1		%
Under 511 KeV first step operation:		-2		%
Vs temperature between 0 and +40℃ at 420 nm		-0.3		%/K
For a supply voltage of : 1000V	**Min**	**Typ**	**Max**	**Unit**
Linearity (2%) of anode current up to :		10		mA
Anode pulse:				
Rise time:		5		ns
Duration at half height:		11		ns
Transit time:		45		ns

Typical spectral

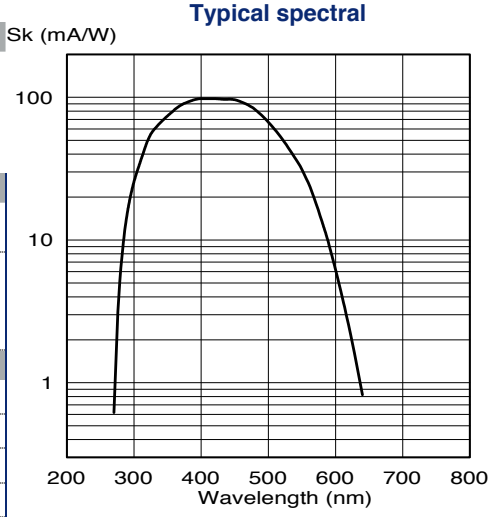

Typical gain curve

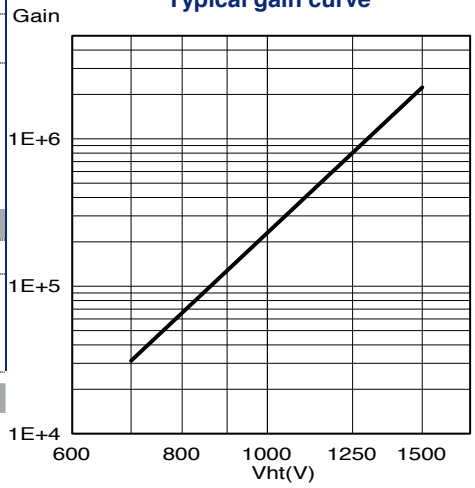

Recommended Voltage Divider

Type A for maximum gain

K	D1	D2	D3	D4	D5	D6	D7	D8	A	
2	1,5	1,5	1,5	1	1	1	1		0,5	(total : 11)

**** characteristic mentioned on the test ticket of the tube***

HZC PHOTONICS

Photomultiplier XP3392

Outline (dimensions in mm)

XP3392

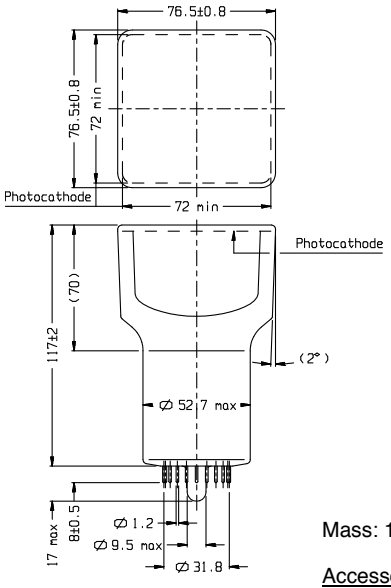

Mass: 184g

Accessories:
Socket: FE2019

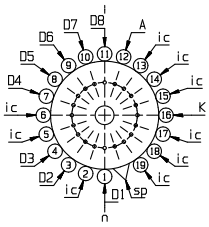

XP3392B

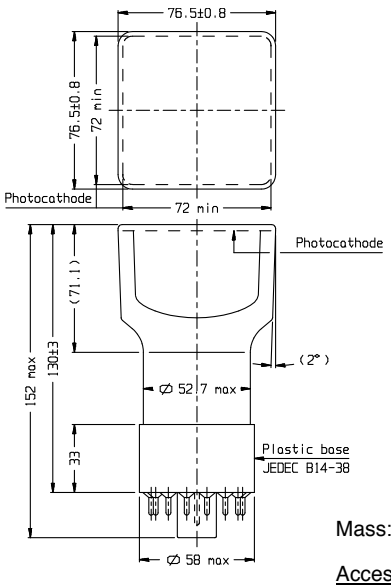

Mass: 224g

Accessories:
Socket: FE1014
Voltage divider: VD282K

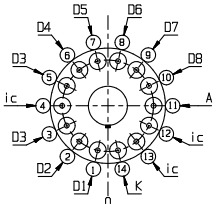

K: cathode
Dn: dynode
A: anode
ic: internal connection
sp: short pin
n: plane of symmetry of the multiplier

Limiting values	Min	Max	Unit
Anode blue sensitivity		30	A/lmf
Supply voltage		1500	V
Continuous anode current		0.2	mA
Voltage between :			
D1 and photocathode :	150	500	V
Consecutive dynode :		300	V
Anode and D8 :	40	300	V
Ambient temperature :			
Short operation (<30 mn) :	-30	+80	°C
Continuous operation & storage :	-30	+50	°C

Variants

XP3392 ■ ■

Finishing
B with plastic base JEDEC B14-38
F with flying leads ∅ 0.5
FB with flying leads and plastic base

Option
C with electrostatic coating
(conductive paint connected to the cathode
+ insulating coating)

Also, other variants can be made. Please, contact us to discuss any specific product requirements.

HZC PHOTONICS

Photomultiplier XP5382

8-stage
76mm (3"), Square tube

Application
- ✓ Gamma-cameras

Features
- ✓ High PHR
- ✓ Good gain stability
- ✓ Low profile

Description	
Window material	Lime glass
Photocathode	Bi-alkali
Refr. Index at 420nm	1.54
Multiplier structure	Box and Linear focused

Photocathode characteristics	Min	Typ	Max	Unit
Spectral range :		290-650		nm
Maximum sensitivity at :		420		nm
Sensitivity :				
Luminous :		100		µA/lm
Blue * :	10	12.5		µA/lmf
Radiant, at 420nm		100		mA/W
Characteristics with voltage divider A	**Min**	**Typ**	**Max**	**Unit**
Gain slope (vs supp. Volt., log/log)		5.6		
For an anode blue sensitivity of		3		A/lmf
Supply voltage *	800	1000	1200	V
Gain		2.4×10^5		
Anode dark current *		1	20	
Pulse height resolution ^{57}Co – NaI(Tl) 3"X3"		8.6	9.2	%
Mean anode sensitivity deviation :				
Long term (16h) :		1		%
After change of count rate :		1		%
Under 511 KeV first step operation:		-2		%
Vs temperature between 0 and +40°C at 420 nm		-0.3		%/K
Anode sensitivity change for magnetic field of 0.05 mT :		2		%
For a supply voltage of : 1000V	**Min**	**Typ**	**Max**	**Unit**
Linearity (2%) of anode current up to :		10		mA
Anode pulse:				
Rise time:		6		ns
Duration at half height:		TBD		ns
Transit time:		TBD		ns
Center to edge difference (C.E.D):		TBD		ns

Typical spectral

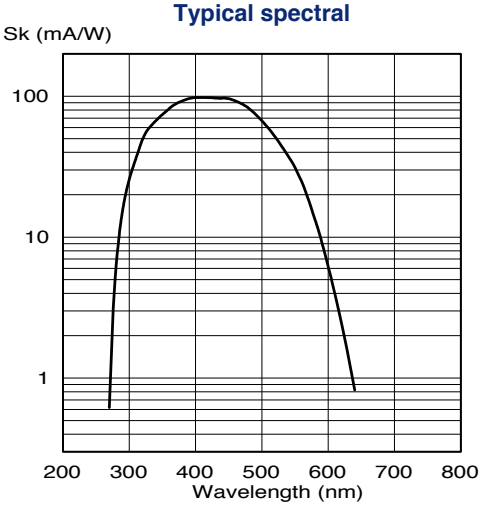

Typical gain curve

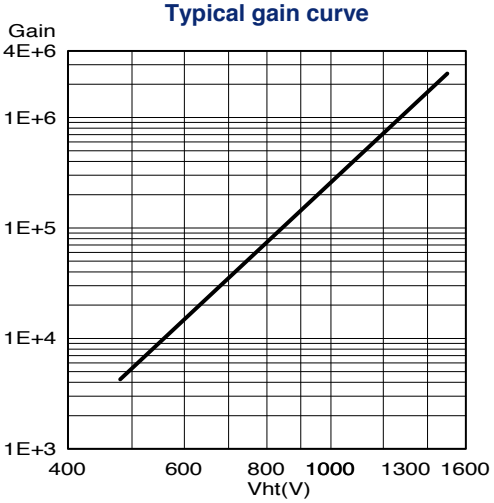

Recommended Voltage Divider

Type A for maximum gain

K	G	D1	D2	D3	D4	D5	D6	D7	D8	A	
2	2	1	1	1	1	1	1	1	1		(total : 12)

**** characteristic mentioned on the test ticket of the tube***

HZC PHOTONICS

Photomultiplier XP5382

Outline (dimensions in mm)

XP5382

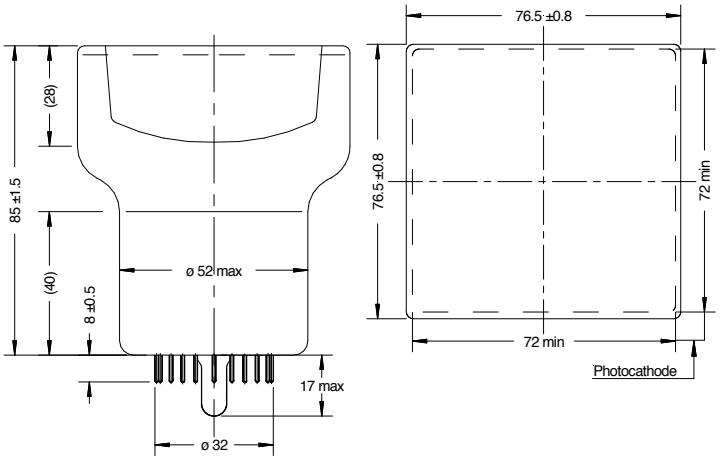

Mass: 150g

Accessories:
Socket: FE2019

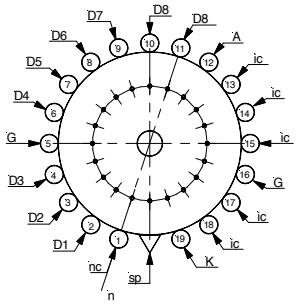

XP5382B

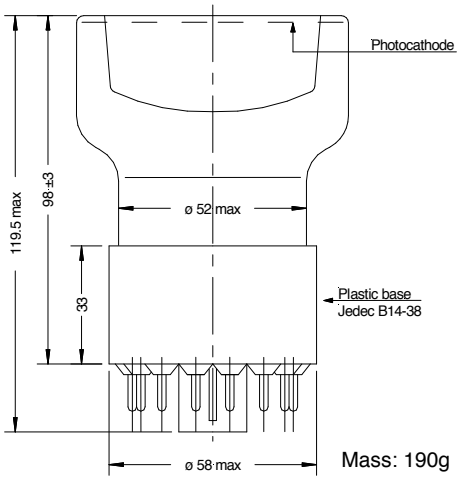

Mass: 190g

Accessories:
Socket: FE1014

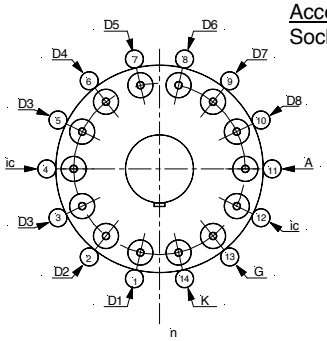

K: cathode
G: focusing electrode
A: anode
Dn: dynode
sp: short pin
ic: internal connection
n: plane of symmetry of the multiplier
nc: not connected

Limiting values	Min	Max	Unit
Anode blue sensitivity		30	A/lmf
Supply voltage		1500	V
Continuous anode current		0.2	mA
Voltage between :			
D1 and photocathode :	160	500	V
Consecutive dynode :		300	V
Anode and D8 :	30	300	V
Ambient temperature :			
Short operation (<30 mn) :	-30	+80	°C
Continuous operation & storage :	-30	+50	°C

Variants

XP5382 ■ ■

Finishing
B with plastic base JEDEC B14-38
F with flying leads ∅ 0.5

Option
C with electrostatic coating
(conductive paint connected to the cathode
+ insulating coating)

Also, other variants can be made. Please, contact us to discuss any specific product requirements.

HZC PHOTONICS